TIMBERPRO

# 700D Series
## Parts Manual

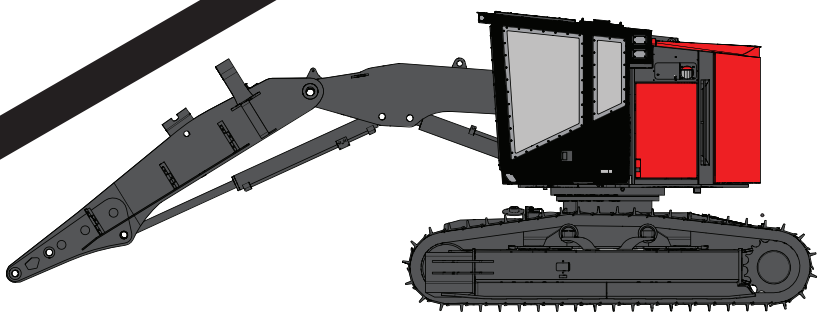

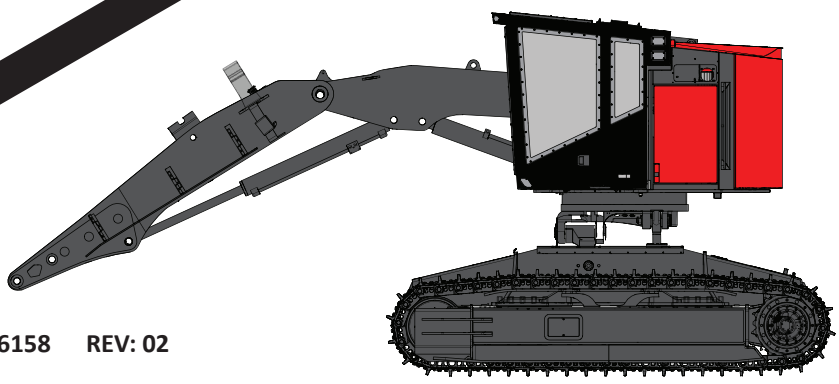

P/N: 56158 REV: 02

TimberPro Inc.
1407 Industrial Dr - P.O. Box 415
Shawano, WI 54166
(715)524-7899
www.timberpro.com

# SECTION INDEX


| FICHE GRID | | |
|---|---|---|
| | INTRODUCTION | |
| | ENGINE | A |
| | ENGINE RELATED PARTS | B |
| | COOLING SYSTEM | C |
| | FUEL SYSTEM AND RELATED PARTS | D |
| | ELECTRICAL SYSTEM | E |
| | HYDRAULIC SYSTEM | H |
| | MAIN/REVOLVING FRAME AND RELATED PARTS | J |
| | OPERATORS COMPARTMENT AND CONTROL SYSTEM | K |
| | GUARDS | M |
| | SWING CIRCLE AND RELATED PARTS | N |
| | TRAVEL AND LOWER PIPING | P |
| | UNDERCARRIAGE | R |
| | WORK EQUIPMENT | T |
| | MARKS AND PLATES | U |
| | MISCELLANEOUS | W |

# INTRODUCTION

# INTRODUCTION

## GENERAL

This parts book lists engine and chassis service parts for the machine shown on the title page.

We reserve the right to make changes or add improvements at any time without incurring any obligation to install such changes on products previously sold.

## ILLUSTRATIONS

Illustrated items are given item numbers which correspond to the same number in the parts list. Item numbers may point to more than one identical item. The quantity of items shipped will depend on the quantity ordered. Illustrations are of typical parts only.

## METHOD OF LISTING

The parts list and its associated illustration is the essential content of the Parts Book. Each parts list is arranged in numeric sequence by page number.

The parts list form is divided into six columns for easy use:

1. **ITEM Column -** This column contains keys to the illustration so the part can be located on the associated illustration. If there is no key number for the part, the part is non-illustrated and is not on the associated illustration.

2. **PART NUMBER Column -** This column contains the part number of each serviceable part. The part number, in conjunction with the description of the part, is the key to locating needed service parts.

3. **DESCRIPTION Column -** This column contains the description of each part. It can be used to find needed parts when the part number is not known. Indentation of an item indicates that it is a component part (or subassembly) of the item under which it is indented.

4. **QTY Column -** This column contains the quantity of each part number listed as needed for the product it is a part of.

## PRODUCT GRAPHICS

The owner and/or operator must replace any and all safety and warning product graphics if they are defaced or removed from the machine.

## ORDERING PARTS

When ordering parts, always give the following information:

1. The complete part number, including prefix or suffix letters, the name of the part and the quantity required.

2. The complete model number, machine serial number and engine serial number of the machine. See PRODUCT IDENTIFICATION NUMBERS, which follows.

3. When ordering parts for items which have their own serial numbers (such as transmissions, torque converters or axles) also include the serial numbers of the transmission, torque converter and/or axle. We recommend that you write the model and machine serial numbers of your machine and all major components in the spaces provided below.

Date Received _____

Machine Model _____ Serial No. _____

Engine Model _____ Serial No. _____

Hydraulic Pump Model _____ Serial No. _____

Final Drive Model _____ Serial No. _____

_____ _____

_____ _____

_____ _____

_____ _____

## PRODUCT IDENTIFICATION NUMBERS

| Machine Model | Engine Model | Chassis Serial Number |
|---|---|---|
| | | |

# Table Of Contents


| Description | Page# |
|---|---|
| A100-00010 - ENGINE FILTERS | 20 |
| A100-00000 - ENGINE | 20 |
| B100-00000 - ENGINE HYDRAULIC FITTINGS | 22 |
| B100-00000 - ENGINE HYDRAULIC FITTINGS | 24 |
| B100-00020 - CHARGE PIPING - DRIVE PUMPS (MACHINE BUILD DATES UP TO 07/11/24) | 26 |
| B100-00000 - ENGINE HYDRAULIC FITTINGS | 26 |
| B100-00030 - CHARGE PUMP PIPING (MACHINE BUILD DATES 07/12/24 AND FORWARD) | 27 |
| B100-00040 - ENGINE FUEL HOSES | 28 |
| B-2220000, B-2221000 - ENGINE PANELS | 29 |
| B100-00060 - ENGINE INSTALLATION | 30 |
| B100-00070 - ENGINE SHROUD | 31 |
| B100-00080 - ENGINE AIR INTAKE | 32 |
| B100-00090 - ENGINE AFTER TREATMENT | 34 |
| B100-00100 - TRIPPLE DRIVE GEARBOX INSTALLATION | 35 |
| B100-00101 - TRIPPLE DRIVE GEARBOX | 36 |
| B100-00103 - TRIPPLE DRIVE GEARBOX BREATHER | 37 |
| B100-00110 - HEATER HOSES | 38 |
| B100-00120 - ENGINE SHIELDS | 39 |
| B100-00130 - ELECTRICAL LOAD CENTER | 40 |
| B100-00140 - ELECTRICIAL CENTER | 41 |
| B100-00150 - HYDRAULIC FITTING KIT - ELECTRICAL PANEL | 42 |
| B100-00155 - ELECTRICAL PANEL S/N: UP TO 1237 | 44 |
| B100-00160 - ELECTRICAL PANEL S/N: 1238 & FORWARD | 45 |
| B100-00165 - ELECTRICAL PANEL INSTALLATION | 46 |
| B100-00170 - 120V ENGINE BLOCK HEATER | 47 |
| C100-00000 - COOLER FAN AND MOTOR INSTALLATION | 49 |
| C100-00001 - COOLING FAN MOTOR COMPONENTS | 50 |
| C100-00002 - COOLER BREAKDOWN | 51 |
| C100-00003 - COOLER FAN SHROUD | 52 |
| C100-00004 - RADIATOR/COOLER COMPONENTS | 53 |
| C100-00010 - RADIATOR SURGE TANK INSTALLATION | 54 |
| C100-00020 - COOLING UNIT RELATED PARTS | 55 |
| C100-00030 - RADIATOR HOSES AND AIR TUBES | 56 |
| D100-0000 - FUEL TANK COMPONENTS - LEVELING | 58 |
| D100-00010 - FUEL HOSE KIT - UPPER | 60 |
| D100-00020 - FUEL TANK COMPONENTS - NON-LEVELING | 62 |
| D100-00030 - DEF *TANK* COMPONENTS & COVERS | 64 |
| E100-00010 - ELECTRICIAL HARNESS - (IQAN SYSTEM) | 67 |
| E100-00000 - BATTERY INSTALLATION | 67 |
| E-2227300 - IQAN LOAD CENTER COMPONENTS S/N: UP TO 1237 | 68 |
| E-2227300 - IQAN LOAD CENTER XC43 COMPONENTS S/N: 1238 & FORWARD | 69 |
| E100-00020 - ELECTRICIAL HARNESS - (IQAN SYSTEM) (HYD. TANK SENSORS, FAN MOTOR & CHARGE SYSTEM) | 70 |
| E100-00030 - ELECTRICIAL HARNESS - (LOAD CENTER POWER) | 71 |
| E100-00030 - ELECTRICIAL HARNESS - (CAB TO ENGINE) | 71 |
| E100-00050 - ELECTRICIAL HARNESS - (FRONT DOOR) | 72 |
| E100-00060 - ELECTRICIAL HARNESS ACCESSORIES | 73 |
| E100-00070 - STARTER AND ALTERNATOR ELECTRICIAL CABLES | 74 |
| E100-00080 - ENGINE ELECTRICIAL HARNESS | 75 |
| E100-00090 - ENGINE ECU GROUND HARNESS | 76 |
| E100-00100 - ENGINE AFTER TREATMENT ELECTRICIAL HARNESS | 77 |
| E100-00110 - GRID HEATER, FILL PUMP & GULLWING PUMP ELECTRICIAL HARNESSES | 78 |
| E100-00120 - STARTER CABLES | 79 |
| E100-00130 - DEF TANK ELECTRICIAL WIRE HARNESS | 80 |
| E100-00140 - BATTERY CABLES | 81 |
| E100-00150 - CABIN EXTERIOR LIGHTS | 82 |
| E100-00160 - WORKING LIGHTS - FRONT DOOR | 83 |
| E0410 - 2222300 - HORN AND BACK UP ALARM | 84 |
| E0410 - 2222300 - HORN AND BACK UP ALARM | 85 |
| E100-00180 - CABIN ACCESSORIES-CAMERA | 86 |
| E100-00190 - COVER, CAMERA INSTALL | 87 |
| E100-00200 - COVER, CAMERA NON-SELECT | 88 |
| E100-00210 - CONTROL HARNESS, PROCESSOR, U | 89 |

| Description | Page# |
|---|---|
| E100-00215 - LEFT & RIGHT CONTROL PODS | 90 |
| H100-00000 - MAIN BOOM CYLINDER PIPING - VALVE TO BULKHEAD - (K220/L90 VALVE) | 93 |
| H200-00000 - MAIN BOOM CYLINDER PIPING - VALVE TO BULKHEAD(W450/W300 VALVE) | 94 |
| H100-00010 - HOC MANIFOLD & CASE MANIFOLD PIPING - (K220/L90 VALVE) | 96 |
| H200-00010 - HOC MANIFOLD & CASE MANIFOLD PIPING - (WS450/WS300 VALVE) | 98 |
| H100-00020 - IMPLEMENT PUMP & SWING PUMP PIPING - COMMON | 100 |
| H100-00030 - IMPLEMENT PUMP PRESSURE & LOAD SENSE PIPING - (K220/L90 VALVE) | 102 |
| H200-00020 - IMPLEMENT PUMP PRESSURE & LOAD SENSE PIPING (WS450/WS300 VALVE) | 104 |
| H100-00040 - DRIVE PUMP UPPER PIPING - (COMMON) | 106 |
| H100-00050 - TRACK DRIVE BRAKE, SHIFT & CASE DRAIN UPPER PIPING - (COMMON) | 108 |
| H100-00060 - COOLING FAN MOTOR PIPING - (COMMON) | 109 |
| H100-00070 - HYDRAULIC TANK SURGE TANK INSTALLATION AND PIPING - (COMMON) | 110 |
| H100-00080 - GULLWING CYLINDER & HYDRAULIC TANK FILL PIPING - (COMMON) | 111 |
| H100-00090 - HYDRAULIC TANK FILL HOSE ASSEMBLY - (COMMON) | 112 |
| H100-00100 - BOOM LIGHT WIRE HOSE ASSEMBLY | 113 |
| H100-00110 - HYDRAULIC TANK - SINGLE PUMP SUCTION | 114 |
| H100-00120 - HYDRAULIC TANK - DUAL PUMP SUCTION | 116 |
| H100-00130 - HYDRAULIC TANK FITTINGS | 118 |
| H100-00140 - HYD TANK HEATER U. (120V) | 119 |
| H100-00150 - HYDRAULIC TANK INSTALLATION | 120 |
| H100-00160 - MAIN VALVE INSTALLATION - (K220/L90 VALVE) | 122 |
| H100-00170 - MAIN VALVE HYD. FITTINGS - DISC SAW (NON-LEVELING) | 124 |
| H100-00180 - MAIN VALVE HYD. FITTINGS - DISC SAW (LEVELING) | 125 |
| H100-00181 - MAIN VALVE COMPONENTS - DISC SAW | 126 |
| H100-00182 - K220 MAIN VALVE SECTION - STICK BOOM - (DISC SAW) | 128 |
| H100-00183 - K220 MAIN VALVE SECTION - TOOL TILT - (DISC SAW) | 129 |
| H100-00184 - K220 MAIN VALVE SECTION - MAIN BOOM - (DISC SAW) | 130 |
| H100-00185 - K220 MAIN VALVE SECTION - INLET - (DISC SAW) | 131 |
| H100-00186 - L90 MAIN VALVE SECTION - ACCUMULATOR & CLAMP- (DISC SAW) | 132 |
| H100-00187 - L90 MAIN VALVE SECTION - CAB LEVEL - (DISC SAW) | 133 |
| H100-00188 - L90 MAIN VALVE SECTION - MAIN BOOM - HEAD ROTATE - (DISC SAW) | 134 |
| H100-00189 - L90 VALVE SECTION - MAIN BOOM - OUTLET - (DISC SAW) | 136 |
| H100-00200 - MAIN VALVE HYD. FITTINGS - DISC SAW/BAR SAW COMBO (NON-LEVELING) | 138 |
| H100-00210 - MAIN VALVE HYD. FITTINGS - DISC SAW/BAR SAW COMBO (LEVELING) | 139 |
| H100-00211 - MAIN VALVE COMPONENTS - DISC SAW/BAR SAW COMBO | 140 |
| H100-00212 - K220 MAIN VALVE SECTION - STICK BOOM - (DISC SAW/BAR SAW COMBO) | 142 |
| H100-00213 - K220 MAIN VALVE SECTION - TOOL TILT - (DISC SAW/BAR SAW COMBO) | 143 |
| H100-00214 - K220 MAIN VALVE SECTION - SAW - (DISC SAW/BAR SAW COMBO) | 144 |
| H100-00215 - K220 MAIN VALVE SECTION - MAIN BOOM - (DISC SAW/BAR SAW COMBO) | 145 |
| H100-00216 - K220 MAIN VALVE SECTION - INLET - (DISC SAW/BAR SAW COMBO) | 146 |
| H100-00217 - L90 MAIN VALVE SECTION - ACCUMULATOR & CLAMP (DISC SAW/BAR SAW COMBO) | 147 |
| H100-00218 - L90 MAIN VALVE SECTION - HEAD ROTATE - (DISC SAW/BAR SAW COMBO) | 148 |
| H100-00219 - L90 MAIN VALVE SECTION - CAB LEVEL - (DISC SAW/BAR SAW COMBO) | 149 |
| H100-00220 - L90 VALVE SECTION - MAIN BOOM - OUTLET (DISC SAW/BAR SAW COMBO) | 150 |
| H100-00230 - MAIN VALVE HYD. FITTINGS - CONTROL FALL PROCESSOR (LEVELING) | 152 |
| H100-00240 - MAIN VALVE HYD. FITTINGS - CONTROL FALL PROCESSOR (NON-LEVELING) | 154 |
| H100-00250 - MAIN VALVE COMPONENTS - CONTROL FALL PROCESSOR MAIN VALVE COMPONENTS - CONTROL FALL PROCESSOR | 156 |
| H100-00251 - K220 MAIN VALVE SECTION - STICK BOOM - CONTROL FALL PROCESSOR | 158 |
| H100-00252 - K220 MAIN VALVE SECTION - TOOL TILT - CONTROL FALL PROCESSOR | 159 |
| H100-00253 - K220 MAIN VALVE SECTION - PROCESSOR - CONTROL FALL PROCESSOR | 160 |
| H100-00254 - K220 MAIN VALVE SECTION - MAIN BOOM - CONTROL FALL PROCESSOR | 161 |
| H100-00255 - K220 MAIN VALVE SECTION - INLET - CONTROL FALL PROCESSOR | 162 |
| H100-00256 - L90 MAIN VALVE SECTION - MAIN BOOM - HEAD ROTATE (CONTROL FALL PROCESSOR) | 163 |
| H100-00257 - L90 MAIN VALVE SECTION - CAB LEVEL - CONTROL FALL PROCESSOR | 164 |
| H100-00258 - L90 VALVE SECTION - MAIN BOOM - OUTLET - CONTROL FALL PROCESSOR | 165 |
| H100-00260 - MAIN VALVE HYD. FITTINGS - DANGLE PROCESSOR, FIXED ARM (LEVELING) | 166 |
| H100-00270 - MAIN VALVE HYD. FITTINGS - DANGLE PROCESSOR, FIXED ARM (NON-LEVELING) | 168 |
| H100-00280 - MAIN VALVE COMPONENTS - DANGLE PROCESSOR WITH FIXED ARM | 170 |
| H100-00281 - K220 MAIN VALVE SECTION - STICK BOOM DANGLE PROCESSOR WITH FIXED ARM | 172 |
| H100-00282 - K220 MAIN VALVE SECTION DANGLE PROCESSOR WITH FIXED ARM | 173 |
| H100-00283 - K220 MAIN VALVE SECTION - MAIN BOOM DANGLE PROCESSOR WITH FIXED ARM | 174 |
| H100-00284 - K220 MAIN VALVE SECTION - INLET (DANGLE PROCESSOR WITH FIXED ARM) | 175 |
| H100-00285 - L90 MAIN VALVE SECTION - MAIN BOOM - HEAD ROTATE (DANGLE PROCESSOR WITH FIXED ARM) | 176 |
| H100-00286 - L90 MAIN VALVE SECTION - CAB LEVEL (DANGLE PROCESSOR WITH FIXED ARM) | 177 |
| H100-00287 - L90 VALVE SECTION - MAIN BOOM - OUTLET (DANGLE PROCESSOR WITH FIXED ARM) | 178 |

| Description | Page# |
|---|---|
| H100-00290 - MAIN VALVE HYD. FITTINGS - DANGLE PROCESSOR, SQUIRT ARM (LEVELING) | 180 |
| H100-00300 - MAIN VALVE HYD. FITTINGS - DANGLE PROCESSOR, SQUIRT ARM (NON-LEVELING) | 182 |
| H100-00310 - MAIN VALVE COMPONENTS - DANGLE PROCESSOR WITH SQUIRT ARM | 184 |
| H100-00311 - K220 MAIN VALVE SECTION - STICK BOOM - DANGLE PROCESSOR WITH SQUIRT ARM | 186 |
| H100-00312 - K220 MAIN VALVE SECTION - PROCESSOR - DANGLE PROCESSOR WITH SQUIRT ARM | 187 |
| H100-00313 - K220 MAIN VALVE SECTION - MAIN BOOM - DANGLE PROCESSOR WITH SQUIRT ARM | 188 |
| H100-00314 - K220 MAIN VALVE SECTION - INLET - DANGLE PROCESSOR WITH SQUIRT ARM | 189 |
| H100-00315 - L90 MAIN VALVE SECTION - SQUIRT BOOM - DANGLE PROCESSOR WITH SQUIRT ARM | 190 |
| H100-00316 - L90 MAIN VALVE SECTION - MAIN BOOM - HEAD ROTATE DANGLE PROCESSOR WITH SQUIRT ARM | 191 |
| H100-00317 - L90 MAIN VALVE SECTION - CAB LEVEL - DANGLE PROCESSOR WITH SQUIRT ARM | 192 |
| H100-00318 - L90 VALVE SECTION - MAIN BOOM - OUTLET - DANGLE PROCESSOR WITH SQUIRT ARM | 194 |
| H100-00320 - BOOM PLATE HYD. FITTINGS - DISC SAW/BAR SAW COMBO ATTACHMENTS | 196 |
| H100-00330 - BOOM PLATE HYD. FITTINGS - DISC SAW & PROCESSOR ATTACHMENTS | 197 |
| H200-00100 - MAIN VALVE INSTALLATION - (W450/W300 VALVE) | 200 |
| H200-00110 - MAIN VALVE HYD. FITTINGS - DISC SAW (LEVELING) - (W450/W300 VALVE) | 201 |
| H200-00120 - MAIN VALVE HYD. FITTINGS - DISC SAW (NON-LEVELING) (W450/W300 VALVE) | 202 |
| H200-00121 - WS450 MAIN VALVE SECTION - INLET - (DISC SAW) | 203 |
| H200-00122 - W450 MAIN VALVE SECTION - TOOL TILT - (DISC SAW ) | 204 |
| H200-00123 - W450 MAIN VALVE SECTION - STICK BOOM - (DISC SAW ) | 205 |
| H200-00124 - W450 MAIN VALVE SECTION - MAIN BOOM - (DISC SAW ) | 206 |
| H200-00125 - WS300 MAIN VALVE SECTION - ACCUMULATOR - (DISC SAW ) | 207 |
| H200-00126 - WS300 MAIN VALVE SECTION - ROTATE - (DISC SAW ) | 208 |
| H200-00127 - WS300 MAIN VALVE SECTION - CLAMP - (DISC SAW ) | 209 |
| H200-00128 - WS300 MAIN VALVE SECTION - CAB LEVEL - (DISC SAW ) | 210 |
| H200-00129 - WS300 MAIN VALVE SECTION - OUTLET - (DISC SAW ) | 211 |
| H200-00130 - MAIN VALVE HYD. FITTINGS - DISC SAW/BAR SAW COMBO (LEVELING) (W450/W300 VALVE) | 212 |
| H200-00140 - MAIN VALVE HYD. FITTINGS - DISC SAW/BAR SAW COMBO (NON-LEVELING) (W450/W300 VALVE) | 213 |
| H200-00141 - W450 MAIN VALVE SECTION - INLET - (DISC SAW / BAR SAW COMBO) | 214 |
| H200-00142 - W450 MAIN VALVE SECTION - TOOL TILT - (DISC SAW / BAR SAW COMBO) | 215 |
| H200-00143 - W450 MAIN VALVE SECTION - STICK BOOM (DISC SAW / BAR SAW COMBO) | 216 |
| H200-00144 - W450 MAIN VALVE SECTION - MAIN BOOM (DISC SAW / BAR SAW COMBO) | 217 |
| H200-00145 - W450 MAIN VALVE SECTION - SAW - (DISC SAW / BAR SAW COMBO) | 218 |
| H200-00146 - WS300 MAIN VALVE SECTION - ACCUMULATOR (DISC SAW / BAR SAW COMBO) | 219 |
| H200-00147 - WS300 MAIN VALVE SECTION - ROTATE - (DISC SAW / BAR SAW COMBO) | 220 |
| H200-00148 - WS300 MAIN VALVE SECTION - CLAMP - (DISC SAW / BAR SAW COMBO) | 221 |
| H200-00149 - WS300 MAIN VALVE SECTION - CAB LEVEL (DISC SAW / BAR SAW COMBO) | 222 |
| H200-00150 - WS300 MAIN VALVE SECTION - OUTLET - (DISC SAW / BAR SAW COMBO) | 223 |
| H200-00160 - BOOM PLATE HYD. FITTINGS - DISC SAW & PROCESSOR ATTACHMENTS (W450/W300 VALVE) | 224 |
| H200-00170 - MAIN VALVE HYD. FITTINGS - CONTROL FALL PROCESSOR (LEVELING) (W450/W300 VALVE) | 225 |
| H200-00180 - MAIN VALVE HYD. FITTINGS - CONTROL FALL PROCESSOR (NON-LEVELING) (W450/W300 VALVE) | 226 |
| H200-00181 - W450 MAIN VALVE SECTION - INLET - (CONTROL FALL PROCESSOR) | 227 |
| H200-00182 - W450 MAIN VALVE SECTION - TOOL TILT - (CONTROL FALL PROCESSOR) | 228 |
| H200-00183 - W450 MAIN VALVE SECTION - STICK BOOM - (CONTROL FALL PROCESSOR) | 229 |
| H200-00184 - W450 MAIN VALVE SECTION - MAIN BOOM - (CONTROL FALL PROCESSOR) | 230 |
| H200-00185 - W450 MAIN VALVE SECTION - PROCESSOR/SAW (CONTROL FALL PROCESSOR) | 231 |
| H200-00186 - WS300 MAIN VALVE SECTION - HEAD ROTATE (CONTROL FALL PROCESSOR) | 232 |
| H200-00187 - WS300 MAIN VALVE SECTION - CAB LEVEL - (CONTROL FALL PROCESSOR) | 233 |
| H200-00188 - WS300 MAIN VALVE SECTION - OUTLET - (CONTROL FALL PROCESSOR) | 234 |
| H200-00190 - BOOM PLATE HYD. FITTINGS - DISC SAW & PROCESSOR ATTACHMENTS (W450/W300 VALVE) | 235 |
| H200-00200 - MAIN VALVE HYD. FITTINGS - DANGLE PROCESSOR WITH FIXED ARM (LEVELING) (W450/W300 VALVE) | 236 |
| H200-00210 - MAIN VALVE HYD. FITTINGS - DANGLE PROCESSOR WITH FIXED ARM (NON-LEVELING) (W450/W300 VALVE) | 237 |
| H200-00211 - W450 MAIN VALVE SECTION - INLET - (FIXED ARM DANGLE PROCESSOR) | 238 |
| H200-00212 - W450 MAIN VALVE SECTION - STICK BOOM (FIXED ARM DANGLE PROCESSOR) | 239 |
| H200-00214 - W450 MAIN VALVE SECTION - PROCESSOR / SAW (FIXED ARM DANGLE PROCESSOR) | 240 |
| H200-00213 - W450 MAIN VALVE SECTION - MAIN BOOM (FIXED ARM DANGLE PROCESSOR) | 241 |
| H200-00215 - WS300 MAIN VALVE SECTION - ROTATE - (FIXED ARM DANGLE PROCESSOR) | 242 |
| H200-00216 - WS300 MAIN VALVE SECTION - CAB LEVEL (FIXED ARM DANGLE PROCESSOR) | 243 |
| H200-00217 - WS300 MAIN VALVE SECTION - OUTLET (FIXED ARM DANGLE PROCESSOR) | 244 |
| H200-00220 - MAIN VALVE HYD. FITTINGS - DANGLE PROCESSOR WITH SQUIRT BOOM (LEVELING) (W450/W300 VALVE) | 246 |
| H200-00230 - MAIN VALVE HYD. FITTINGS - DANGLE PROCESSOR WITH SQUIRT BOOM (NON-LEVELING) (W450/W300 VALVE) | 247 |
| H200-00231 - WS450 MAIN VALVE SECTION - INLET (SQUIRT ARM DANGLE PROCESSOR) | 248 |
| H200-00232 - WS450 MAIN VALVE SECTION - STICK BOOM (SQUIRT ARM DANGLE PROCESSOR) | 249 |
| H200-00233 - WS450 MAIN VALVE SECTION - MAIN BOOM (SQUIRT ARM DANGLE PROCESSOR) | 250 |
| H200-00234 - WS450 MAIN VALVE SECTION - PROCESSOR / SAW (SQUIRT ARM DANGLE PROCESSOR) | 251 |

| Description | Page# |
|---|---|
| H200-00236 - WS300 MAIN VALVE SECTION - SQUIRT BOOM (SQUIRT ARM DANGLE PROCESSOR) | 253 |
| H200-00236 - WS300 MAIN VALVE SECTION - ROTATE (SQUIRT ARM DANGLE PROCESSOR) | 254 |
| H200-00237 - WS300 MAIN VALVE SECTION - CAB LEVEL (SQUIRT ARM DANGLE PROCESSOR) | 255 |
| H200-00238 - WS300 MAIN VALVE SECTION - OUTLET (SQUIRT ARM DANGLE PROCESSOR) | 256 |
| H200-00230 - BOOM PLATE HYD. FITTINGS - DANGLE PROCESSOR ATTACHMENTS (W450/W300 VALVE) | 257 |
| H100-00340 - CAB LEVELING HYD. HOSE LOWER CONNECTIONS ROTARY MAINFOLD TO CYLINDERS | 258 |
| H100-00350 - LEVELING CARBODY HOSE & FITTINGS - (RM. TO BULKHEAD & RH TRACK MOTOR FITTINGS) | 260 |
| H100-00360 - LEVELING CARBODY HOSE & FITTINGS - (RM. TO BULKHEAD & LH TRACK MOTOR FITTINGS) | 262 |
| H100-00370 - LEVELING CARBODY HOSE & FITTINGS - (FUEL SYSTEM) | 264 |
| H100-00380 - LEVELING CARBODY HOSE & FITTINGS - (LEVELING CYLINDER BASE & RM GREASE LINES) | 266 |
| H100-00390 - HYDRAULIC FITTING KIT - (TRACK) | 267 |
| H100-00400 - HYDRAULIC FITTING KIT - (TRACK) | 268 |
| H100-00410 - HYDRAULIC FITTING KIT - (TRACK) | 270 |
| H100-00420 - HYDRAULIC FITTING KIT - (TRACK) | 271 |
| H100-00421 - ROTARY MANIFOLD BREAKDOWN | 272 |
| H100-00430 - LEVELING CARBODY GREASE LINES AND FITTINGS | 274 |
| H100-00440 - NON-LEVELING LEVELING CARBODY HYD. FITTINGS (RM. TO BULKHEAD TO TRACK MOTORS) | 276 |
| H100-00450 - NON-LEVELING CARBODY HYD. FITTINGS - (FUEL SYSTEM) | 278 |
| H100-00460 - HYDRAULIC FITTING KIT - (TRACK-NL) | 280 |
| H100-00470 - HYDRAULIC FITTING KIT - (TRACK-NL) | 281 |
| H100-00480 - HYDRAULIC FITTING KIT - (TRACK-NL) | 282 |
| H100-00481 - ROTARY MANIFOLD COMPONENTS | 284 |
| H100-00481 - ROTARY MANIFOLD COMPONENTS | 286 |
| H100-00490 - MAIN BOOM PIPING - DISC SAW | 288 |
| H100-00500 - STICK BOOM PIPING - DISC SAW | 290 |
| H-2225200, H-2256700 - DISC SAW PIPING - PRESSURE, CASE DRAIN & - LOAD SENSE (DISC SAW PUMP TO BOOM) | 292 |
| H100-00520 - DISC SAW PIPING - TOOL TILT (K220/L90 VALVE) - MAIN VALVE TO BOOM | 294 |
| H200-00240 - DISC SAW PIPING - TOOL TILT (W450/W300 VALVE) MAIN VALVE TO BOOM | 295 |
| H100-00530 - DISC SAW PIPING - STICK BOOM CYLINDER (K220/L90 VALVE) (MAIN VALVE TO BOOM) | 296 |
| H200-00250 - DISC SAW PIPING - STICK BOOM (W450/W300 VALVE) MAIN VALVE TO BOOM | 297 |
| H100-00540 - DISC SAW PIPING - CLAMP (K220/L90 VALVE) - MAIN VALVE TO BOOM | 298 |
| H200-00260 - DISC SAW PIPING - CLAMP (W450/W300 VALVE) - MAIN VALVE TO BOOM | 299 |
| H100-00550 - DISC SAW PIPING - ACCUMULATOR (K220/L90 VALVE) MAIN VALVE TO BOOM) | 300 |
| H200-00270 - DISC SAW PIPING - ACCUMULATOR (W450/W300 VALVE) MAIN VALVE TO BOOM) | 301 |
| H100-00560 - DISC SAW PIPING - LATERAL TILT (K220/L90 VALVE) MAIN VALVE TO BOOM | 302 |
| H200-00280 - DISC SAW PIPING - LATERAL TILT (W450/W300 VALVE) MAIN VALVE TO BOOM | 303 |
| H100-00570 - DISC SAW PIPING - CAB LEVEL (K220/L90 VALVE) - MAIN VALVE TO BOOM | 304 |
| H200-00290 - DISC SAW PIPING - CAB LEVEL (W450/W300 VALVE) MAIN VALVE TO BOOM | 305 |
| H200-00300 - DISC SAW PIPING - MAIN BOOM CYLINDER (W450/W300 VALVE) (BULKHEAD FITTING TO CYLINDER) | 306 |
| H100-00580 - DISC SAW PIPING - TOOL TILT (MAIN BOOM TO CYLINDER) | 307 |
| H100-00590 - DISC SAW PIPING - STICK BOOM (MAIN BOOM TO STICK CYLINDER) | 308 |
| H100-00600 - DISC SAW PIPING - CLAMP (MAIN BOOM TO STICK BOOM) | 309 |
| H100-00610 - DISC SAW PIPING - ACCUMULATOR (MAIN BOOM TO STICK BOOM) | 310 |
| H100-00620 - DISC SAW PIPING - LATERAL TILT (MAIN BOOM TO STICK BOOM) | 311 |
| H100-00630 - DISC SAW PIPING - PRESSURE & RETURN (MAIN BOOM TO STICK BOOM) | 312 |
| H100-00640 - DISC SAW PIPING - CASE DRAIN (MAIN BOOM TO STICK BOOM) | 313 |
| H100-00650 - DISC SAW PIPING - LIGHT WIRE (MAIN BOOM TO STICK BOOM) | 314 |
| H100-00660 - DISC SAW PIPING - GREASE HOSES (MAIN BOOM TO STICK BOOM) | 315 |
| H100-00670 - MAIN BOOM PIPING - DISC SAW/BAR SAW COMBO | 316 |
| H100-00680 - STICK BOOM PIPING - DISC SAW/BAR SAW COMBO | 318 |
| H-2224500 - DISC SAW/BAR SAW COMBO PIPING - PRESSURE, RETURN, CASE DRAIN & LOAD SENSE (DISC SAW PUMP TO BOOM) | 320 |
| H100-00700 - DISC SAW/BAR SAW COMBO PIPING - TOOL TILT (K220/L90 VALVE) MAIN VALVE TO BOOM | 322 |
| H200-00310 - DISC SAW/BAR SAW COMBO PIPING - TOOL TILT (W450/W300 VALVE) MAIN VALVE TO BOOM | 323 |
| H100-00710 - DISC SAW/BAR SAW COMBO PIPING - STICK BOOM (K220/L90 VALVE) VALVE TO BOOM | 324 |
| H200-00310 - DISC SAW/BAR SAW COMBO PIPING - STICK BOOM (W450/W300 VALVE) VALVE TO BOOM | 325 |
| H100-00720 - DISC SAW/BAR SAW COMBO PIPING - CLAMP (K220/L90 VALVE) MAIN VALVE TO BOOM | 326 |
| H200-00320 - DISC SAW/BAR SAW COMBO PIPING - CLAMP (W450/W300 VALVE) MAIN VALVE TO BOOM | 327 |
| H100-00730 - DISC SAW/BAR SAW COMBO PIPING - ACCUMULATOR (K220/L90 VALVE) VALVE TO BOOM | 328 |
| H200-00330 - DISC SAW/BAR SAW COMBO PIPING - ACCUMULATOR (W450/W300 VALVE) VALVE TO BOOM | 329 |
| H100-00740 - DISC SAW/BAR SAW COMBO PIPING - LATERAL TILT (K220/L90 VALVE) VALVE TO BOOM | 330 |
| H200-00340 - DISC SAW/BAR SAW COMBO PIPING - LATERAL TILT (W450/W300 VALVE) VALVE TO BOOM | 331 |
| H100-00750 - DISC SAW/BAR SAW COMBO PIPING - CAB LEVEL (K220/L90 VALVE) VALVE TO BOOM | 332 |
| H200-00350 - DISC SAW/BAR SAW COMBO PIPING - CAB LEVEL (W450/W300 VALVE) VALVE TO BOOM | 333 |
| H100-00760 - DISC SAW/BAR SAW COMBO PIPING - MAIN BOOM CYLINDER (BULKHEAD FITTING TO CYLINDER) | 334 |

| Description | Page# |
|---|---|
| H100-00770 - DISC SAW/BAR SAW COMBO PIPING - SAW (K220/L90 VALVE) BULKHEAD FITTING TO CYLINDER | 335 |
| H200-00350 - DISC SAW/BAR SAW COMBO PIPING - SAW (W450/W300 VALVE) BULKHEAD FITTING TO CYLINDER | 336 |
| H100-00780 - DISC SAW/BAR SAW COMBO PIPING - TOOL TILT (MAIN BOOM TO CYLINDER) | 337 |
| H100-00790 - DISC SAW/BAR SAW COMBO PIPING - STICK BOOM (MAIN BOOM TO STICK CYLINDER) | 338 |
| H100-00800 - DISC SAW/BAR SAW COMBO PIPING - SAW (MAIN BOOM TO STICK BOOM) | 339 |
| H100-00810 - DISC SAW/BAR SAW COMBO PIPING - CLAMP (MAIN BOOM TO STICK BOOM) | 340 |
| H100-00820 - DISC SAW/BAR SAW COMBO PIPING - ACCUMULATOR (MAIN BOOM TO STICK BOOM) | 341 |
| H100-00830 - DISC SAW/BAR SAW COMBO PIPING - LATERAL TILT (MAIN BOOM TO STICK BOOM) | 342 |
| H100-00840 - DISC SAW/BAR SAW COMBO PIPING - PRESSURE & RETURN (MAIN BOOM TO STICK BOOM) | 343 |
| H100-00850 - DISC SAW/BAR SAW COMBO PIPING - CASE DRAIN (MAIN BOOM TO STICK BOOM) | 344 |
| H100-00860 - DISC SAW/BAR SAW COMBO PIPING - LIGHT WIRE (MAIN BOOM TO STICK BOOM) | 345 |
| H100-00870 - DISC SAW/BAR SAW COMBO PIPING - GREASE HOSES (MAIN BOOM TO STICK BOOM) | 346 |
| H100-00880 - MAIN BOOM PIPING - CONTROL FALL PROCESSOR | 348 |
| H100-00890 - STICK BOOM PIPING - CONTROL FALL PROCESSOR | 350 |
| H100-00900 - CONTROL FALL PROCESSOR PIPING - PRESSURE, RETURN, CASE DRAIN & LOAD SENSE - (K220/L90 VALVE) -VALVE TO BOOM | 352 |
| H-2258300, 2258400 - CONTROL FALL PROCESSOR PIPING - SAW PRESSURE, RETURN, CASEDRAIN & LOAD SENSE | 353 |
| H100-00920 - CONTROL FALL PROCESSOR PIPING - TOOL TILT (K220/L90 VALVE) MAIN VALVE TO BOOM | 354 |
| H200-00360 - CONTROL FALL PROCESSOR PIPING - TOOL TILT (W450/W300 VALVE) MAIN VALVE TO BOOM | 355 |
| H100-00930 - CONTROL FALL PROCESSOR PIPING - STICK BOOM CYLINDER (K220/L90 VALVE) - MAIN VALVE TO BOOM | 356 |
| H200-00370 - CONTROL FALL PROCESSOR PIPING - STICK BOOM CYLINDER (W450/W300 VALVE) | 357 |
| H200-00940 - CONTROL FALL PROCESSOR PIPING - MAIN BOOM (K220/L90 VALVE) MAIN VALVE TO BOOM | 358 |
| H200-00380 - CONTROL FALL PROCESSOR PIPING - MAIN BOOM (W450/W300 VALVE) | 359 |
| H100-00950 - CONTROL FALL PROCESSOR PIPING - ROTATE (K220/L90 VALVE) MAIN VALVE TO BOOM | 360 |
| H200-00390 - CONTROL FALL PROCESSOR PIPING - ROTATE (W450/W300 VALVE) MAIN VALVE TO BOOM | 361 |
| H100-00960 - CONTROL FALL PROCESSOR PIPING - CAB LEVEL (K220/L90 VALVE) MAIN VALVE TO BOOM | 362 |
| H200-00400 - CONTROL FALL PROCESSOR PIPING - CAB LEVEL (W450/W300 VALVE) MAIN VALVE TO BOOM | 363 |
| H100-00970 - CONTROL FALL PROCESSOR PIPING - MAIN BOOM CYLINDER (BULKHEAD FITTING TO CYLINDER) | 364 |
| H100-00980 - CONTROL FALL PROCESSOR PIPING - LIGHT WIRE (MAIN BOOM TO STICK BOOM) | 365 |
| H100-00990 - CONTROL FALL PROCESSOR PIPING - TOOL TILT (MAIN BOOM TO CYLINDER) | 366 |
| H100-01000 - CONTROL FALL PROCESSOR PIPING - STICK BOOM (MAIN BOOM TO STICK CYLINDER) | 367 |
| H100-01010 - CONTROL FALL PROCESSOR PIPING - ROTATE (MAIN BOOM TO STICK BOOM) | 368 |
| H100-01020 - CONTROL FALL PROCESSOR PIPING - PRESSURE & RETURN (MAIN BOOM TO STICK BOOM) | 369 |
| H100-01030 - CONTROL FALL PROCESSOR PIPING - CASE DRAIN & ATTACHMENT ELEC. (MAIN BOOM TO STICK BOOM) | 370 |
| H100-01040 - CONTROL FALL PROCESSOR PIPING - GREASE HOSES (MAIN BOOM TO STICK BOOM) | 371 |
| H100-01050 - MAIN BOOM PIPING - FIXED STICK BOOM DANGLE HEAD PROCESSOR | 372 |
| H100-01060 - STICK BOOM PIPING - FIXED STICK BOOM DANGLE HEAD PROCESSOR | 373 |
| H100-01070 - FIXED STICK BOOM DANGLE PROCESSOR PIPING - PRESSURE, CASE DRAIN & LOAD SENSE (K220/L90 VALVE) - AUXILIARY PUMP TO BOOM) | 374 |
| H200-00410 - STICK BOOM DANGLE PROCESSOR PIPING - SAW PRESSURE, RETURN, CASE DRAIN & LOAD SENSE (W450/W300 VALVE) - VALVE TO BOOM | 375 |
| H100-01080 - FIXED STICK BOOM DANGLE PROCESSOR PIPING - STICK BOOM CYLINDER (K220/L90 VALVE) - MAIN VALVE TO BOOM | 376 |
| H200-00420 - FIXED STICK BOOM DANGLE PROCESSOR PIPING - STICK BOOM CYLINDER (W450/W300 VALVE) - MAIN VALVE TO BOOM | 377 |
| H100-01090 - FIXED STICK BOOM DANGLE PROCESSOR PIPING - ROTATE (K220/L90 VALVE) - MAIN VALVE TO BOOM | 378 |
| H200-00430 - FIXED STICK BOOM DANGLE PROCESSOR PIPING - ROTATE (W450/W300 VALVE) MAIN VALVE TO BOOM | 379 |
| H100-01100 - FIXED STICK BOOM DANGLE PROCESSOR PIPING - CAB LEVEL (K220/L90 VALVE) MAIN VALVE TO BOOM | 380 |
| H200-00440 - FIXED STICK BOOM DANGLE PROCESSOR PIPING - CAB LEVEL (W450/W300 VALVE) MAIN VALVE TO BOOM | 381 |
| H100-01110 - FIXED STICK BOOM DANGLE PROCESSOR PIPING - MAIN BOOM CYLINDER (BULKHEAD FITTING TO CYLINDER) | 382 |
| H100-01120 - FIXED STICK BOOM DANGLE PROCESSOR PIPING - LIGHT WIRE (MAIN BOOM TO STICK BOOM) | 383 |
| H100-01130 - FIXED STICK BOOM DANGLE PROCESSOR PIPING - STICK BOOM (MAIN BOOM TO STICK CYLINDER) | 384 |
| H100-01140 - FIXED STICK BOOM DANGLE PROCESSOR PIPING - ROTATE (MAIN BOOM TO STICK BOOM) | 385 |
| H100-01150 - FIXED STICK BOOM DANGLE PROCESSOR PIPING - PRESSURE & RETURN (MAIN BOOM TO STICK BOOM) | 386 |
| H100-01160 - FIXED STICK BOOM DANGLE PROCESSOR PIPING - CASE DRAIN & ATTACHMENT ELEC. (MAIN BOOM TO STICK BOOM) | 387 |
| H100-01170 - FIXED STICK BOOM DANGLE PROCESSOR PIPING - GREASE HOSES (MAIN BOOM TO STICK BOOM) | 388 |
| H100-01180 - MAIN BOOM PIPING - SQUIRT BOOM PROCESSOR | 390 |
| H100-01190 - STICK BOOM PIPING - SQUIRT BOOM PROCESSOR | 392 |
| H100-01200 - SQUIRT BOOM PROCESSOR PIPING - PRESSURE, CASE DRAIN & LOAD SENSE - (K220/L90 VALVE) - VALVE TO BOOM | 394 |
| H200-00450 - SQUIRT BOOM PROCESSOR PIPING - PRESSURE, CASE DRAIN & LOAD SENSE - (W450/W300 VALVE) - VALVE TO BOOM | 395 |
| H100-01210 - SQUIRT BOOM PROCESSOR PIPING - STICK BOOM CYLINDER (K220/L90 VALVE) MAIN VALVE TO BOOM | 396 |
| H200-00460 - SQUIRT BOOM PROCESSOR PIPING - STICK BOOM CYLINDER (W450/W300 VALVE) - MAIN VALVE TO BOOM | 397 |
| H100-01220 - SQUIRT BOOM PROCESSOR PIPING - MAIN BOOM (K220/L90 VALVE) MAIN VALVE TO BOOM | 398 |
| H200-00470 - SQUIRT BOOM PROCESSOR PIPING - MAIN BOOM (W450/W300 VALVE) MAIN VALVE TO BOOM | 399 |
| H100-01230 - SQUIRT BOOM PROCESSOR PIPING - MAIN BOOM CYLINDER (BULKHEAD FITTING TO CYLINDER) | 400 |
| H100-01240 - SQUIRT BOOM PROCESSOR PIPING - SQUIRT (K220/L90 VALVE) MAIN VALVE TO BOOM | 401 |
| H200-00480 - SQUIRT BOOM PROCESSOR PIPING - SQUIRT (W450/W300 VALVE) MAIN VALVE TO BOOM | 402 |
| H100-01250 - SQUIRT BOOM PROCESSOR PIPING - ROTATE (K220/L90 VALVE) MAIN VALVE TO BOOM | 403 |
| H200-00490 - SQUIRT BOOM PROCESSOR PIPING - ROTATE (W450/W300 VALVE) MAIN VALVE TO BOOM | 404 |

| Description | Page# |
|---|---|
| H100-01260 - SQUIRT BOOM PROCESSOR PIPING - CAB LEVEL (K220/L90 VALVE) MAIN VALVE TO BOOM | 405 |
| H200-00500 - SQUIRT BOOM PROCESSOR PIPING - CAB LEVEL (W450/W300 VALVE) MAIN VALVE TO BOOM | 406 |
| H100-01270 - SQUIRT BOOM PROCESSOR PIPING - LIGHT WIRE (MAIN BOOM TO STICK BOOM) | 407 |
| H100-01280 - SQUIRT BOOM PROCESSOR PIPING - STICK BOOM (MAIN BOOM TO STICK CYLINDER) | 408 |
| H100-01290 - SQUIRT BOOM PROCESSOR PIPING - BOOM SQUIRT (MAIN BOOM TO CYLINDER) | 409 |
| H100-01300 - SQUIRT BOOM PROCESSOR PIPING - ROTATE (MAIN BOOM TO STICK BOOM) | 410 |
| H100-01310 - SQUIRT BOOM PROCESSOR PIPING - PRESSURE & RETURN (MAIN BOOM TO STICK BOOM) | 411 |
| H100-01320 - SQUIRT BOOM PROCESSOR PIPING - CASE DRAIN & ATTACHMENT ELEC. (MAIN BOOM TO STICK BOOM) | 412 |
| H100-01330 - SQUIRT BOOM PROCESSOR PIPING - GREASE HOSES (MAIN BOOM TO STICK BOOM | 413 |
| H100-01340 - IMPLEMENT PUMP - 145CC | 414 |
| H100-01350 - IMPLEMENT PUMP - 145CC | 415 |
| H100-01351 - IMPLEMENT PUMP - 145CC | 416 |
| H100-01352 - IMPLEMENT PUMP - 145CC | 418 |
| H100-01353 - IMPLEMENT PUMP - 145CC | 420 |
| H100-01360 - IMPLEMENT PUMP - 175CC | 422 |
| H100-01361 - IMPLEMENT PUMP - 175CC | 423 |
| H100-01363 - IMPLEMENT PUMP - 175CC | 424 |
| H100-01370 - IMPLEMENT PUMP SUCTION | 426 |
| H200-00100 - IMPLEMENT PUMP - 175CC HD | 427 |
| H100-01380 - IMPLEMENT PUMP COVER - NO AUX PUMP | 429 |
| H100-01390 - AUXILARY PUMP - 60CC | 430 |
| H100-01391 - 60CC AUXILARY PUMP COMPONENTS | 431 |
| H100-01392 - 60CC AUXILARY PUMP COMPONENTS | 432 |
| H100-01393 - 60CC AUXILARY PUMP COMPONENTS | 434 |
| H100-01394 - 60CC AUXILARY PUMP COMPONENTS | 436 |
| H100-01400 - AUXILARY PUMP - 71CC | 438 |
| H100-01401 - 71CC AUXILARY PUMP COMPONENTS | 439 |
| H100-01402 - 71CC AUXILARY PUMP COMPONENTS | 440 |
| H100-01403 - 71CC AUXILARY PUMP COMPONENTS | 441 |
| H100-01404 - 71CC AUXILARY PUMP COMPONENTS | 442 |
| H100-01405 - 71CC AUXILARY PUMP COMPONENTS | 444 |
| H100-01410 - MANIFOLD SINGLE PUMP FLOW | 446 |
| H100-01420 - PUMP, TRACK DRIVE - LH (VTG90) | 447 |
| H100-01421 - PUMP, TRACK DRIVE - LH (VTG90) | 448 |
| H100-01423 - PUMP, TRACK DRIVE - LH (VTG90) | 450 |
| H100-01424 - PUMP, TRACK DRIVE - LH (VTG90) | 452 |
| H100-01425 - PUMP, TRACK DRIVE - LH (VTG90) | 454 |
| H100-01426 - PUMP, TRACK DRIVE - LH (VTG90) | 456 |
| H100-01430 - PUMP, TRACK DRIVE - RH (VTG90) | 458 |
| H100-01431 - PUMP, TRACK DRIVE - RH (VTG90) | 460 |
| H100-01432 - PUMP, TRACK DRIVE - RH (VTG90) | 462 |
| H100-01433 - PUMP, TRACK DRIVE - RH (VTG90) | 464 |
| H100-01434 - PUMP, TRACK DRIVE - RH (VTG90) | 466 |
| H100-01435 - PUMP, TRACK DRIVE - RH (VTG90) | 468 |
| H100-01436 - PUMP, TRACK DRIVE - RH (VTG90) | 470 |
| H100-01440 - PUMP, TRACK DRIVE COMPONENTS (VTG90) | 472 |
| H100-01441 - PUMP, TRACK DRIVE COMPONENTS (VTG90) | 473 |
| H100-01442 - PUMP, TRACK DRIVE COMPONENTS (VTG90) | 474 |
| H100-01443 - PUMP, TRACK DRIVE COMPONENTS (VTG90) | 475 |
| H100-01450 - SWING PUMP | 476 |
| H100-01451 - SWING PUMP COMPONENTS | 477 |
| H100-01452 - SWING PUMP COMPONENTS | 478 |
| H100-01453 - SWING PUMP COMPONENTS | 480 |
| H100-01454 - SWING PUMP COMPONENTS | 482 |
| H100-01455 - SWING PUMP COMPONENTS | 484 |
| H100-01456 - SWING PUMP COMPONENTS | 486 |
| H100-01460 - SWING LOCK-CASE DRAIN MANIFOLD | 487 |
| H100-01461 - SWING LOCK-CASE DRAIN MANIFOLD COMPONENTS | 488 |
| H100-01470 - CHARGE PUMP | 489 |
| H100-01471 - CHARGE PUMP COMPONENTS | 490 |
| H100-01473 - CHARGE PUMP SUCTION | 491 |
| H100-01480 - CHARGE OIL MANIFOLD | 492 |
| H100-01482 - CHARGE OIL MANIFOLD COMPONENTS | 493 |
| H100-01490 - MANIFOLD, OIL COOLER CNTRL/SAW STOP | 494 |
| H100-01491 - MANIFOLD, OIL COOLER CNTRL/SAW STOP COMPONENTS | 495 |
| H100-01500 - RETURN MANIFOLD | 496 |

| Description | Page# |
|---|---|
| H100-01510 - GULLWING DOOR HYD PUMP | 497 |
| H100-01511 - GULLWING DOOR HYD PUMP COMPONENTS | 498 |
| H100-01520 - GULLWING DOOR CYLINDER | 499 |
| H100-01521 - GULLWING DOOR CYLINDER COMPONENTS | 500 |
| J100-00000 - BULKHEAD FITTING BRACKET | 502 |
| J100-00005 - REVOLVING FRAME | 503 |
| J100-00010 - REVO FRAME GREASE HOSES | 504 |
| J100-00011 - KIT, FRONT STEP EXT - EU | 505 |
| K100-00000 - CABIN SEAT, SEATS INC | 507 |
| K100-00001 - CABIN SEAT, SEATS INC | 508 |
| K100-00002 - CABIN SEAT, SEATS INC | 510 |
| K100-00003 - CABIN SEAT, SEATS INC | 512 |
| K-2241300 - CABIN SEAT - BE-GE | 514 |
| K100-00011 - CABIN SEAT - BE-GE | 515 |
| K100-00020 - CABIN DOORS | 516 |
| K100-00030 - CABIN WINDOWS | 518 |
| K100-00040 - CABIN INSULATION | 520 |
| K100-00050 - FLOORMAT - FB/TH | 522 |
| K100-00060 - CABIN TRIM | 524 |
| K100-00065 - CABIN WELDMENT | 526 |
| K100-00070 - CABIN MOUNTING | 528 |
| K100-00080 - CABIN ENTRY STEP | 530 |
| K100-00085 - CABIN NO STEP | 531 |
| K100-00090 - JOYSTICKS - TRACK STD | 532 |
| K100-00100 - JOYSTICKS - PROCESSOR | 533 |
| K100-105 - JOYSTICKS - HARNESS | 534 |
| K100-00110 - CABIN ELECTRICAL COMPONENTS | 536 |
| K100-00120 - CABIN WIRE HARNESS | 538 |
| K100-00130 - CABIN CONTROLS - TRACK | 539 |
| K100-00140 - CABIN HVAC | 540 |
| K100-00141 - CABIN HEATER / AIR CONDITIONING BOX COMPONENTS | 541 |
| K100-00142 - HEATER / AIR CONDITIONING CONTROLLER | 542 |
| K100-00143 - HEATER / AIR CONDITIONING BINARY SWITCH | 543 |
| K100-00144 - HEATER / AIR CONDITIONING BINARY AIR TEMP SENSOR | 545 |
| K100-00145 - CABIN HEATER WATER VALVE | 545 |
| K100-00146 - AIR CONDITIONING DRIER | 546 |
| K100-00148 - AIR CONDITIONING / HEATER HOSES | 547 |
| K100-00149 - DEROST CABIN FAN | 548 |
| K100-00150 - HVAC MOUNTING | 549 |
| K100-00160 - CABIN RADIO | 550 |
| K100-00170 - CABIN FIRE EXTINGUISHER | 551 |
| K4208-2255700 - KOMTRAX COMPONENTS & INSTALLATION | 552 |
| K-2255700 - KOMTRAX COMPONENTS & INSTALLATION - (IRIDIUM ANTENNA) | 554 |
| M100-00010 - GULLWING DOOR INSTALLATION | 556 |
| M100-00020 - GULLWING DOOR DEBRIS GUARDS | 558 |
| M100-00030 - GULLWING DOOR EXHAUST TIP | 559 |
| M100-00035 - GULLWING WALKWAY | 560 |
| M100-00040 - UPPER TURNTABLE DOOR & COVERS | 562 |
| M100-00050 - UPPER TURNTABLE DOOR & COVERS | 564 |
| M100-00060 - HEAT SHIELD, PADDING, AND TRIM INSTALLATION | 566 |
| M100-00070 - STRUCTURE PANELS | 567 |
| M-2228700 - UPPER TURNTABLE DOOR & COVERS - (DOOR PROP) | 568 |
| N100-00000 - SWING CIRCLE | 571 |
| N100-00010 - SWING CIRCLE | 572 |

| Description | Page# |
|---|---|
| N100-00020 - SWING CIRCLE | 573 |
| N100-00010 - SWING MOTOR INSTALLATION | 574 |
| N100-00011 - SWING MOTOR COMPONENTS | 576 |
| N100-00012 - SWING MOTOR COMPONENTS | 577 |
| N100-00020 - ROTARY MANIFOLD INSTALLATION | 578 |
| N100-00030 - ROTARY MANIFOLD SWIVEL LOCK ARM | 579 |
| P100-00010 - 9’6” (TL725, TL735 & TL745) & 10’4” (TL735) LEVELING CARBODY HOSE & FITTINGS (RM. TO BULKHEAD & LH TRACK MOTOR FITTINGS) | 582 |
| P100-00020 - 9’6” (TL725, TL735 & TL745) & 10’4” (TL735) LEVELING CARBODY HOSE & FITTINGS (RM. TO BULKHEAD & RH TRACK MOTOR FITTINGS) | 584 |
| P100-00030 - 9’6” (TL725, TL735 & TL745) & 10’4” (TL735) CARBODY CAB LEVELING HYD. HOSE LOWER CONNECTIONS - ROTARY MAINFOLD TO CYLINDERS | 586 |
| P100-00040 - 9’6” (TL725, TL735 & TL745) & 10’4” (TL735) LEVELING CARBODY HOSE & FITTINGS - (FUEL SYSTEM) | 588 |
| P100-00050 - 9’6” (TL725, TL735 & TL745) & 10’4” (TL735) LEVELING CARBODY HOSE & FITTINGS - (LEVELING CYLINDER BASE & RM GREASE | 590 |
| P100-00060 - 9’6” (TL725, TL735 & TL745) & 10’4” (TL735) LVL CARBODY GREASE LINES & FITTINGS | 592 |
| P100-00070 - 10’4” (TL725, TL745) 11’0” (TL735) LEVELING CARBODY HOSE & FITTINGS (RM. TO BULKHEAD & LH TRACK MOTOR FITTINGS) | 594 |
| P100-00080 - 10’4” (TL725, TL745) 11’0” (TL735) LEVELING CARBODY HOSE & FITTINGS (RM. TO BULKHEAD & RH TRACK MOTOR FITTINGS) | 596 |
| P100-00090 - 10’4” (TL725, TL745) 11’0” (TL735) CARBODY CAB LEVELING HYD. HOSE LOWER CONNECTIONS - ROTARY MAINFOLD TO CYLINDERS | 598 |
| P100-00100 - 10’4” (TL725, TL745) 11’0” (TL735) LEVELING CARBODY HOSE & FITTINGS (FUEL SYSTEM) | 600 |
| P100-00110 - 10’4” (TL725, TL745) 11’0” (TL735) LEVELING CARBODY HOSE & FITTINGS (LEVELING CYLINDER BASE & RM GREASE HOSE) | 602 |
| P100-00120 - 10’4” (TL725, TL745) 11’0” (TL735) LEVELING CARBODY GREASE LINES & FITTINGS | 604 |
| P100-00130 - 11’0” (TL745) LEVELING CARBODY HOSE & FITTINGS (RM. TO BULKHEAD & LH TRACK MOTOR FITTINGS) | 606 |
| P100-00131 - U/C HYD. HOSE U, 11_0 CARBODY, LVL - 48L C/B - TL745 LH | 608 |
| P100-00140 - 11’0” (TL745) LEVELING CARBODY HOSE & FITTINGS (RM. TO BULKHEAD & RH TRACK MOTOR FITTINGS) | 610 |
| P100-00150 - 11’0” (TL745) CARBODY CAB LEVELING HYD. HOSE LOWER CONNECTIONS (ROTARY MAINFOLD TO CYLINDERS) | 612 |
| P100-00160 - 11’0” (TL745) LEVELING CARBODY HOSE & FITTINGS - (FUEL SYSTEM) | 614 |
| P100-00170 - 11’0” (TL745) LEVELING CARBODY HOSE & FITTINGS (LEVELING CYLINDER BASE & RM GREASE HOSES) | 616 |
| P100-00180 - 11’0” (TL745) LEVELING CARBODY GREASE LINES & FITTINGS | 618 |
| P100-00190 - 9’6” 48L NON-LEVELING LEVELING CARBODY HYD. FITTINGS (RM. TO BULKHEAD TO TRACK MOTORS) | 620 |
| P100-00190 - 9’6” 48L NON-LEVELING LEVELING CARBODY HYD. FITTINGS (RM. TO BULKHEAD TO TRACK MOTORS) | 622 |
| P100-00200 - 9’6” 48L NON-LEVELING CARBODY HYD. FITTINGS - (FUEL HOSES) | 624 |
| P100-00210 - 10’6” 48L NON-LEVELING LEVELING CARBODY HYD. FITTINGS (RM. TO BULKHEAD TO TRACK MOTORS) | 626 |
| P100-00210 - 10’6” 48L NON-LEVELING LEVELING CARBODY HYD. FITTINGS (RM. TO BULKHEAD TO TRACK MOTORS) | 628 |
| P100-00220 - 10’6” 48L NON-LEVELING CARBODY HYD. FITTINGS - (FUEL HOSES) | 630 |
| P100-00230 - 9’6” 45L NON-LEVELING LEVELING CARBODY HYD. FITTINGS (RM. TO BULKHEAD TO TRACK MOTORS) | 632 |
| P100-00230 - 9’6” 45L NON-LEVELING LEVELING CARBODY HYD. FITTINGS (RM. TO BULKHEAD TO TRACK MOTORS) - (RM. TO BULKHEAD TO TRACK MOTORS) | 634 |
| P100-00240 - 9’6” 45L NON-LEVELING CARBODY HYD. FITTINGS - (FUEL HOSES) | 636 |
| P100-00250 - 10’6” 45L NON-LEVELING LEVELING CARBODY HYD. FITTINGS (RM. TO BULKHEAD TO TRACK MOTORS) | 638 |
| P100-00250 - 10’6” 45L NON-LEVELING LEVELING CARBODY HYD. FITTINGS (RM. TO BULKHEAD TO TRACK MOTORS) | 640 |
| P100-00255 - U/C HYD. HOSE U, 10_6 CARBODY, NL - 45L C/B - TN735 - TRACK DRIVE HOSES | 642 |
| P100-00255 - U/C HYD. HOSE U, 10_6 CARBODY, NL - 45L C/B - TN735 - TRACK DRIVE HOSES | 644 |
| P100-00220 - 10’6” 45L NON-LEVELING CARBODY HYD. FITTINGS - (FUEL HOSES) | 646 |
| R100-00010 - TRACK FRAME 725 STD SLIDER TN/TL725D - 9’8”, 10’4” (L) - 9’6”, 10’4” (NL) | 649 |
| R100-00020 - TRACK SLIDER - TL725D - 9’8”, 10’4” | 650 |
| R100-00030 - TRACK SLIDER - TN725D - 9’6”, 10’6” | 651 |
| R100-00040 - TRACK FRAME 735-745 STD SLIDER - TN/TL735D, TN/TL745D | 652 |
| R100-00050 - TRACK SLIDER - L.P. (11’0” CARBODY) - TL735D, TL-745D | 653 |
| R100-00060 - TRACK SLIDER - TN735D, TN745D, TN755D | 654 |
| R100-00070 - TRACK FRAME STD SF ROLLER - TL725D | 655 |
| R100-00080 - TRACK FRAME STD SF ROLLER - TN725D | 656 |
| R100-00090 - TRACK FRAME STD SF ROLLER - TN/TL735D, TN/TL745D | 657 |
| R100-00100 - TRACK FRAME STAR ROLLER - TL725D | 658 |
| R100-00110 - TRACK FRAME STAR ROLLER - TN725D | 659 |
| R100-00120 - TRACK FRAME STAR ROLLER - TN/TL735D, TN/TL745D | 660 |
| R100-00130 - TRACK ROLLER ASSEMBLY INSTALLATION (725) | 661 |
| R100-00130 - TRACK ROLLER ASSEMBLY INSTALLATION (735 AND 745) | 662 |
| R100-00130 - TRACK SHOE U. 8P, 48L S600 BERCO - 725D | 664 |
| R100-00140 - TRACK SHOE U. 8P, 48L D600 BERCO - 725D | 666 |
| R100-00150 - TRACK SHOE U. 8P, 48L S700 BERCO - 725D | 668 |
| R100-00160 - TRACK SHOE U. 8P, 48L D700 BERCO - 725D | 670 |

| Description | Page# |
|---|---|
| R100-00170 - TRACK SHOE U. 8P, 48L T850 BERCO - 725D | 672 |
| R100-00180 - TRACK SHOE U. 8P, 48L T850 CAT - 725D | 674 |
| R100-00190 - TRACK SHOE U. 8.5P, 45L S600 BERCO - 735D | 676 |
| R100-00200 - TRACK SHOE U. 8.5P, 45L S600 HD BERCO - 735D | 678 |
| R100-00210 - TRACK SHOE U. 8.5P, 45L S600 CAT - 735D | 680 |
| R100-00220 - TRACK SHOE U. 8.5P, 45L S700 BERCO - 735D | 682 |
| R100-00230 - TRACK SHOE U. 8.5P, 45L S700 BERCO - TN/TL735D | 684 |
| R100-00240 - TRACK SHOE U. 8.5P, 45L S700 BERCO - HD - TN/TL735D | 686 |
| R100-00250 - TRACK SHOE U. 8.5P, 45L D700 BERCO - 735D | 688 |
| R100-00260 - TRACK SHOE U. 8.5P, 45L D700 HD BERCO - 735D | 690 |
| R100-00270 - TRACK SHOE U. 8.5P, 45L D800 HD BERCO - 735D | 692 |
| R100-00280 - TRACK SHOE D7 48 LINK 600MM SG - 745D, 755D | 694 |
| R100-00290 - TRACK SHOE D7 48 LINK 600MM HD SG - 745D, 755D | 696 |
| R100-00300 - TRACK SHOE D7 48 LINK 600MM SG - 745D, 755D | 698 |
| R100-00310 - TRACK RAIL W/SHOE D7 48 LINK 600MM TALL - 745D, 755D | 700 |
| R100-00320 - TRACK SHOE D7 48 LINK 700MM SG - 745D, 755D | 702 |
| R100-00330 - TRACK SHOE D7 48 LINK 700MM HD SG - 745D, 755D | 704 |
| R100-00340 - TRACK SHOE D7 48 LINK 700MM HD SG - 745D, 755D | 706 |
| R100-00350 - TRACK SHOE D7 48 LINK 700MM DG - 745D, 755D | 708 |
| R100-00360 - TRACK SHOE D7 48 LINK 700MM HD DG - 745D, 755D | 710 |
| R100-00370 - TRACK SHOE D7 48 LINK 850MM TG - 745D, 755D | 712 |
| R100-00380 - TRACK SHOE D7 48 LINK 850MM HD TG - 745D, 755D | 714 |
| R100-00390 - TRACK SHOE D7 48 LINK 900MM TG - TN745D, TN755D | 716 |
| R100-00400 - TRACK SHOE D7G 48 LINK TRILINK 900MM TG - TN745D, TN755 | 718 |
| R100-00410 - CENTER FRAME U. (3M) | 721 |
| R100-00420 - 3M, LVL TRUNK LID | 722 |
| R100-00430 - 10’4 LEVELING CARBODY | 723 |
| R100-00440 - 10’6 & 11’0 LVL TRUCK LID | 724 |
| R100-00450 - 11’0 LEVELING CARBODY | 725 |
| R100-00460 - 10’6 & 11’0 LVL TRUCK LID | 726 |
| R100-00470 - 11’0 LEVELING CARBODY | 727 |
| R100-00480 - 10’6 & 11’0 LVL TRUCK LID | 728 |
| R100-00490 - 3M NL CARBODY | 729 |
| R100-00500 - 3M NL CARBODY LID | 730 |
| R100-00510 - 10’6 NL CARBODY | 731 |
| R100-00520 - 10’6 NL TRUNK LID | 732 |
| R100-00520 - CENTER FRAME U. (3M BLADE) (EU ONLY) | 733 |
| R100-00530 - TRACK FRAME 8.0P, 48L | 734 |
| R100-00530 - TRACK FRAME FRONT IDLER ASSEMBLY AND INSTALLATION (725 ONLY) | 736 |
| R100-00530 - TRACK FINAL DRIVE (725 ONLY) | 738 |
| R100-00530 - TRACK DRIVE MOTOR (725 ONLY) | 740 |
| R100-00530 - TRACK DRIVE MOTOR (725 ONLY) | 741 |
| R100-00540 - TRACK FRAME 8.5P, 45L | 742 |
| R100-00550 - TRACK FRAME 8.5P, 48L | 743 |
| R100-00530 - TRACK FRAME FRONT IDLER ASSEMBLY AND INSTALLATION (735/745 ONLY) | 744 |
| R100-00530 - TRACK FINAL DRIVE ASSEMBLY AND INSTALLATION (735/745 ONLY) | 746 |
| R100-00530 - TRACK DRIVE MOTOR (735 AND 745 ONLY) | 748 |
| R100-00530 - TRACK DRIVE MOTOR (735 AND 745 ONLY) | 749 |
| R100-00560 - TRACK COUNTER WEIGHT - 725 | 750 |
| R100-00570 - TRACK COUNTER WEIGHT - 735 | 751 |
| R100-00580 - TRACK COUNTER WEIGHT - 745 | 752 |
| R100-00590 - DEBRIS DEFLECTORS | 754 |
| R100-00600 - TRACK CHUTE U. 10’4 - D6 LEVELING | 756 |
| R100-00610 - TRACK CHUTE U. 3M - D6 LEVELING | 757 |
| R100-00620 - TRACK CHUTE U. 10’6 - D6 LEVELING | 758 |
| R100-00630 - TRACK CHUTE U. 10’4/D7 LEVELING | 759 |
| R100-00640 - TRACK CHUTE U. 11’0/D7 LEVELING | 760 |
| R100-00650 - TRACK CHUTE U. 3M/D7 LEVELING | 761 |
| R100-00660 - TRACK CHUTE U. 10’6” D7 LEVELING | 762 |
| R100-00670 - LEVELING COMPONENTS | 764 |
| R100-00671 - LEVELING CYLINDER COMPONENTS | 766 |
| T100-00010 - MAIN BOOM - FELLER BUNCHER | 769 |
| T100-00020 - BOOM GUARDING - FELLER BUNCHER | 770 |
| T100-00030 - MAIN BOOM INSTALLATION - FELLER BUNCHER | 772 |
| T100-00040 - MAIN BOOM - HARVESTOR | 773 |

| Description | Page# |
|---|---|
| T1110-2239200 - MAIN BOOM - HARVESTOR - (4.00” BUSHING BORES) | 774 |
| T100-00050 - MAIN BOOM BOOM GUARDING - HARVESTOR | 776 |
| T100-00060 - MAIN BOOM BOOM INSTALLATION - HARVESTOR | 777 |
| T100-00070 - MAIN BOOM BOOM CYLINDER - 150MM | 778 |
| T100-00070 - MAIN BOOM BOOM CYLINDER COMPONENTS - 150MM | 779 |
| T100-00080 - MAIN BOOM BOOM CYLINDER - 165MM BORE | 780 |
| T100-00081 - MAIN BOOM BOOM CYLINDER COMPONENTS - 165MM | 782 |
| T100-00090 - MAIN BOOM BOOM CYLINDER INSTALLATION - FELLER BUNCHER | 784 |
| T100-00100 - MAIN BOOM CYLINDER INSTALLATION - HARVESTOR | 785 |
| T100-00110 - STICK BOOM CYLINDER - 130MM BORE | 786 |
| T100-00111 - STICK BOOM CYLINDER COMPONENTS - 130MM BORE | 787 |
| T100-00120 - STICK BOOM CYLINDER - 140MM BORE | 788 |
| T100-00121 - STICK BOOM CYLINDER COMPONENTS - 140MM BORE | 789 |
| T100-00130 - STICK BOOM - FELLER BUNCHER | 790 |
| T100-00140 - STICK BOOM TOOL TILT CYLINDER COMPONENTS | 792 |
| T100-00150 - GREASE LINE KIT - FELLER BUNCHER / CONTROL FALL PROCESSOR | 794 |
| T-2239800 - ARM ASSEMBLY, FB, HD, U - (TANGUAY HD) | 795 |
| T100-00160 - STICK BOOM FOUR BAR LINK GREASE FITTINGS | 797 |
| T100-00170 - FELLER BUNCHER / CONTROL FALL PROCESSOR - LIGHT INSTALLATION | 798 |
| T100-00170 - FIXED PROCESSOR STICK BOOM | 799 |
| T100-00180 - FIXED PROCESSOR STICK BOOM - LIGHT INSTALLATION | 800 |
| T100-00190 - PROCESSOR SQUIRT BOOM | 801 |
| T100-00200 - PROCESSOR SQUIRT BOOM LIGHT INSTALLATION | 802 |
| T100-00201 - PROCESSOR SQUIRT BOOM COMPONENTS | 803 |
| T100-00202 - PROCESSOR SQUIRT BOOM CYLINDER COMPONENTS | 804 |
| T100-00210 - STICK BOOM CYLINDER - 130MM BORE | 806 |
| T100-00211 - STICK BOOM CYLINDER COMPONENTS - 130MM BORE | 807 |
| T100-00220 - STICK BOOM CYLINDER - 140MM BORE | 808 |
| T100-00221 - STICK BOOM CYLINDER COMPONENTS - 140MM BORE | 809 |
| T100-00230 - STICK BOOM CYLINDER AND CYLINDER INSTALLATION | 810 |
| U100-00000 - MODEL DECAL U. TL725D | 812 |
| U100-00010 - MODEL DECAL U. TN725D | 812 |
| U100-00020 - MODEL DECAL U. TL735D | 813 |
| U100-00030 - MODEL DECAL U. TN735D | 813 |
| U100-00040 - MODEL DECAL U. TN745D | 814 |
| U100-00050 - MODEL DECAL U. TL745D | 814 |
| U100-00070 - GULLWING, DECALS | 815 |
| U100-00060 - BOOM, DECALS | 815 |
| U100-00080 - LOGO & WEB | 815 |
| U100-00090 - DECAL, DASH | 816 |
| U100-00100 - CAB DECALS | 816 |
| U100-000110 - OUTSIDE DECALS | 817 |
| U100-00120 - SERIAL PLATE | 818 |
| W100-00010 - ESPAR HEATER | 820 |
| W100-00011 - ESPAR HEATER COMPONENTS | 822 |
| W100-00011 - ESPAR HEATER COMPONENTS | 824 |
| W200-00020 - HYD TANK FILL PUMP | 826 |
| W300-00030 - DAFO DISTRIBUTION COMPONENTS | 828 |
| W300-00040 - DAFO DISTRIBUTION, DETECTION / ACTUATION CABLE INSTALLATION | 830 |
| W300-00050 - DAFO DISTRIBUTION, DETECTION / ACTUATION CABLE INSTALLATION | 832 |
| W300-00045 - DAFO DISTRIBUTION, THERMAL BLANKET | 834 |
| W400-00060 - HYD TANK VACUUM PUMP | 836 |
| W400-00061 - HYD TANK VACUUM PUMP COMPONENTS | 837 |
| W500-00000 - FIRE EXTINGUISHER - 2.5 GAL | 838 |
| W500-00010 - FIRE EXTINGUISHER - 10LB | 838 |
| W500-00020 - AUTO LEVELING, NO SELECT, U (STANDARD MACHINE FUEL HARNESS | 839 |
| W600-00000 - AUTO LEVELING | 840 |

# ENGINE - (A)

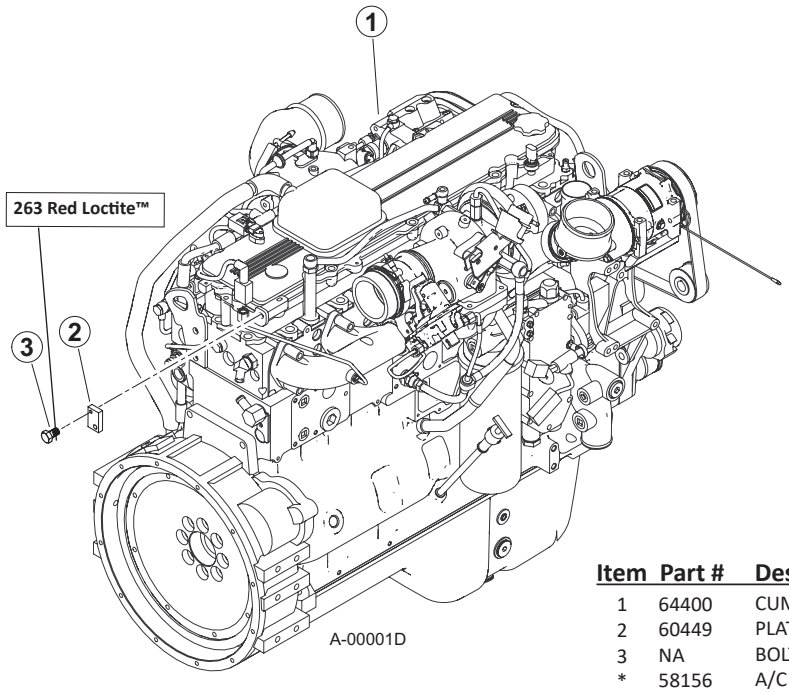


## A100-00000 - ENGINE

| Item | Part # | Description | QTY. |
|---|---|---|---|
| 1 | 64400 | CUMMINS L9 STAGE V - 350 HP, G | 1 |
| 2 | 60449 | PLATE, CUMMINS RELOCATION PLATE | 1 |
| 3 | NA | BOLT (INCLUDED WITH ENGINE **263 RED LOCTITE™** | 1 |
| * | 58156 | A/C COMPRESSOR | 1 |
| * | 3400698 | ALTERNATOR | 1 |
| * | 56074 | STARTER | 1 |

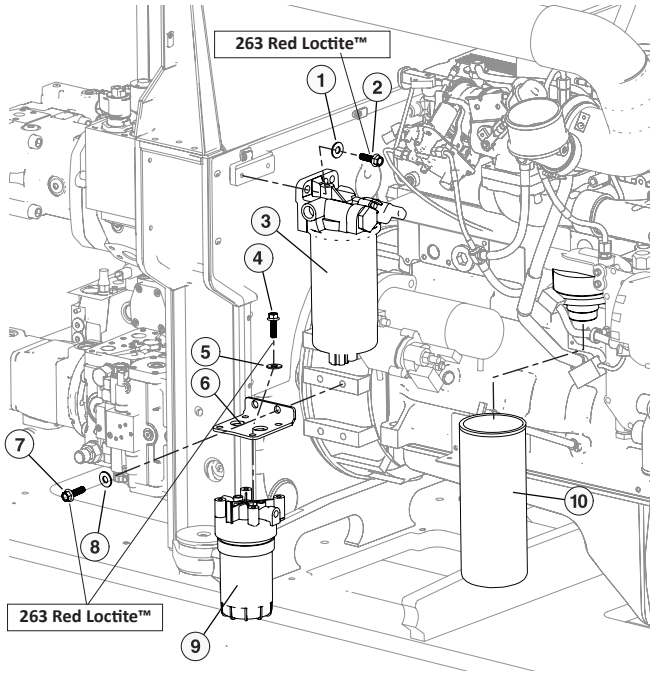


## A100-00010 - ENGINE FILTERS

| Item | Part # | Description | QTY. |
|---|---|---|---|
| 1 | 15528 | WASHER, SAE FLAT | 2 |
| 2 | 10402 | BOLT **263 RED LOCTITE™** | 2 |
| 3 | 58052 | FUEL PRO FILTER - STAGE 1 | 1 |
| 4 | 25059 | BOLT **263 RED LOCTITE™** | 4 |
| 5 | 15559 | WASHER, SAE FLAT | 4 |
| 6 | 60405 | MOUNT, FILTER - FUEL | 1 |
| 7 | 15556 | BOLT **263 RED LOCTITE™** | 2 |
| 8 | 18735 | WASHER, FLAT | 2 |
| 9 | 58053 | STAGE II FUEL FILTER | 1 |
| 10 | 58054 | OIL FILTER | 1 |

# ENGINE RELATED PARTS - (B)

# B100-00000 - ENGINE HYDRAULIC FITTINGS

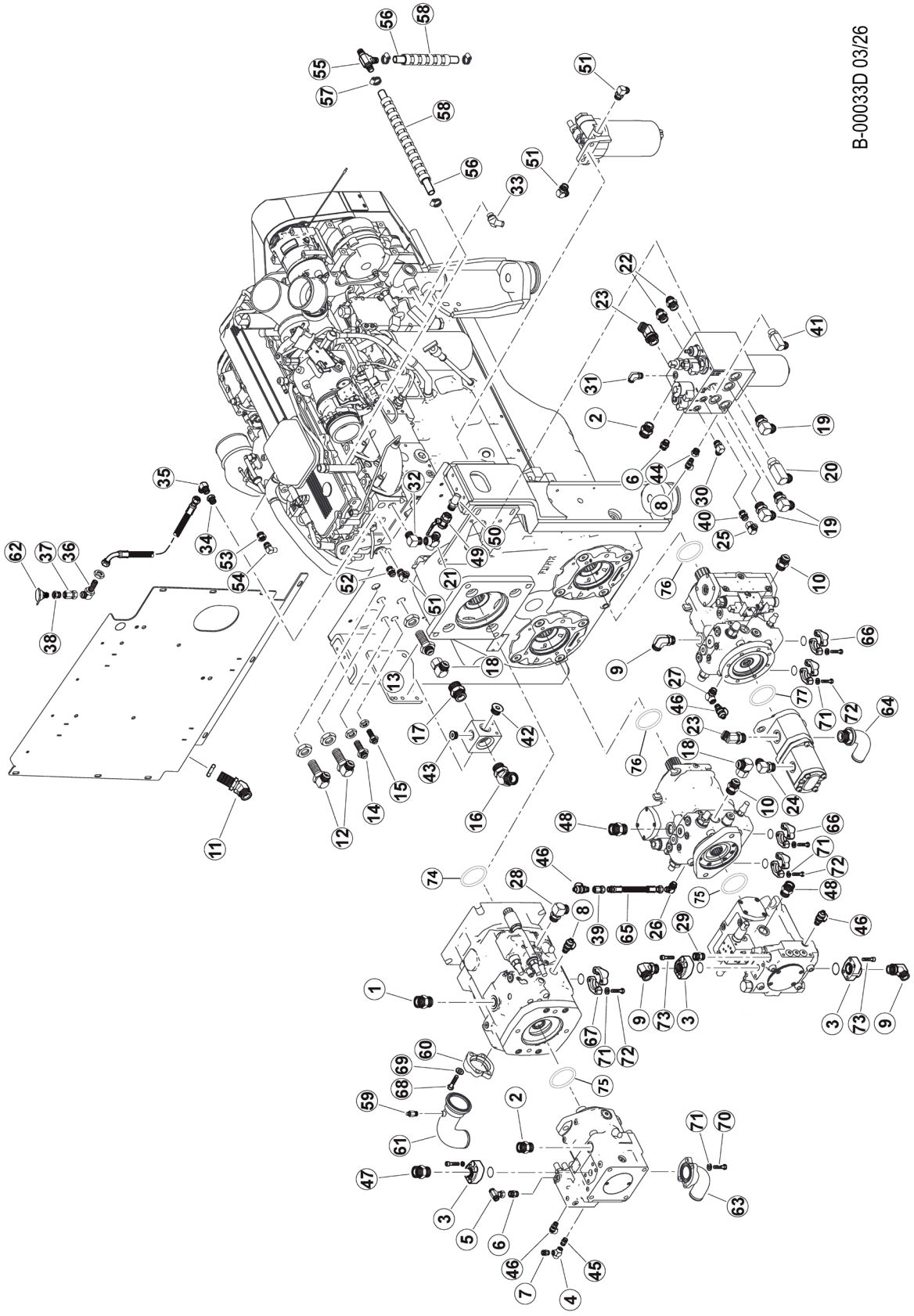

# B100-00000 - ENGINE HYDRAULIC FITTINGS

| Item | Part # | Description | Qty. |
|---|---|---|---|
| 1 | 15225 | CONNECTOR, STR - FF1852T-1616S | 1 |
| 2 | 16851 | CONNECTOR, STR - FF1852T-1210S | 1 |
| 3 | 19808 | CONNECTOR, FLANGE PAD -FP62-12-12ORB-MK | 3 |
| 4 | 52186 | TEE, RUN - MALE (4 A0G5J5-S) | 1 |
| 5 | 23541 | TEE - 4 S6LO-S | 1 |
| 6 | 15124 | CONNECTOR, STR - FF1852T-0406S | 1 |
| 7 | 55214 | CONNECTOR, STR - 848-TTO-04X04 (W/.031) | 1 |
| 8 | 57820 | TAP, GAUGE PORT # 6 SAE - Oring Boss | 2 |
| 9 | 17688 | ELBOW, 90 - FF1868T-1212S | 2 |
| 10 | 15494 | CONNECTOR, STR - 6400-12-10 | 2 |
| 11 | 54316 | ELBOW, BULKHEAD UNION 45DEG #16 | 1 |
| 12 | 54704 | ELBOW, 90 BULK 12 WETX-WLN-S | 2 |
| 13 | 17009 | CONNECTOR, STR BULKHEAD - 2700-12 | 1 |
| 14 | 50420 | CONNECTOR, STR BULKHEAD - 832-TT-06 | 1 |
| 15 | 18582 | CONNECTOR, STR BULKHEAD - FF1994T-0404S | 1 |
| 16 | 17056 | ELBOW, 45 - FF2068T-2020S | 1 |
| 17 | 17344 | CONNECTOR, STR - FF1852T-2020S | 1 |
| 18 | 15477 | CONNECTOR, STR - FF1852T-2020S | 1 |
| 19 | 11306 | ELBOW, 90 12 C5OX-S | 3 |
| 20 | 58379 | ELBOW, LONG, 3/4 JIC(M) - 3/4 ORB(M) | 1 |
| 21 | 51879 | TEE, RUN - .5” (1/2 MR0-S) | 1 |
| 22 | 11324 | CONNECTOR, STR - 6400-12 | 2 |
| 23 | 15474 | ELBOW, 45 - 6802-12 | 1 |
| 24 | 53032 | ELBOW, 90 - 12 JIC X 10 ORB | 1 |
| 25 | 20035 | ELBOW, 90 SWIVEL - 6 C6LO-S | 1 |
| 26 | 16540 | ELBOW, 90 - FF1868T-0404S | 1 |
| 27 | 57641 | FITTING, EBLOW - FEMALE 4-AOEG5-S | 1 |
| 28 | 16296 | ELBOW, 90 - FF1868T-0606S | 1 |
| 29 | 15117 | CONNECTOR, STR - FF1852T-0808S | 1 |
| 30 | 15133 | ELBOW, 90 - FF1868T-0406S | 1 |
| 31 | 16296 | ELBOW, 90 - FF1868T-0606S | 1 |
| 32 | 52785 | ELBOW, MALE PIPE - ¾ X ½ CR-S | 1 |
| 33 | 57805 | FITTING, 179HB-10-8 | 1 |
| 34 | 11312 | BUSHING, REDUCER - 5406-8-4 | 1 |
| 35 | 55206 | FITTING, ELBOW - 6 CTX-S | 1 |
| 36 | 55347 | FITTING, ELBOW - BULKHEAD 6 WETX-WLN-S | 1 |
| 37 | 57422 | FITTING, 6-6 G6X-S | 1 |
| 38 | 11318 | BUSHING, REDUCER - 5406-6-4 | 1 |
| 39 | **CALL** | CONNECTOR, STR - (COMES WITH ITEM 65) | 1 |
| 40 | 18034 | CONNECTOR, STR - FF1852T-0606S | 1 |
| 41 | 57445 | FITTING, 8 CC5OLO-S | 1 |
| 42 | 15584 | PLUG - 6408-HHP-12 | 1 |
| 43 | 18949 | PLUG - 6408-HHP-8 | 1 |
| 44 | 55345 | FITTING, MALE SAE X FEMALE SAE | 1 |
| 45 | 16294 | BUSHING, REDUCER - 6410-6-4 | 1 |
| 46 | 57819 | TAP, GAUGE PORT - #4 SAE Oring Boss- ST | 4 |
| 47 | 18406 | CONNECTOR, STR - FF1852T-1612S | 1 |
| 48 | 15152 | CONNECTOR, STR - FF1852T-1212S | 1 |
| 49 | 51714 | VALVE, BALL - WATER SHUT OFF HEATER 1/2” | 1 |

# B100-00000 - ENGINE HYDRAULIC FITTINGS

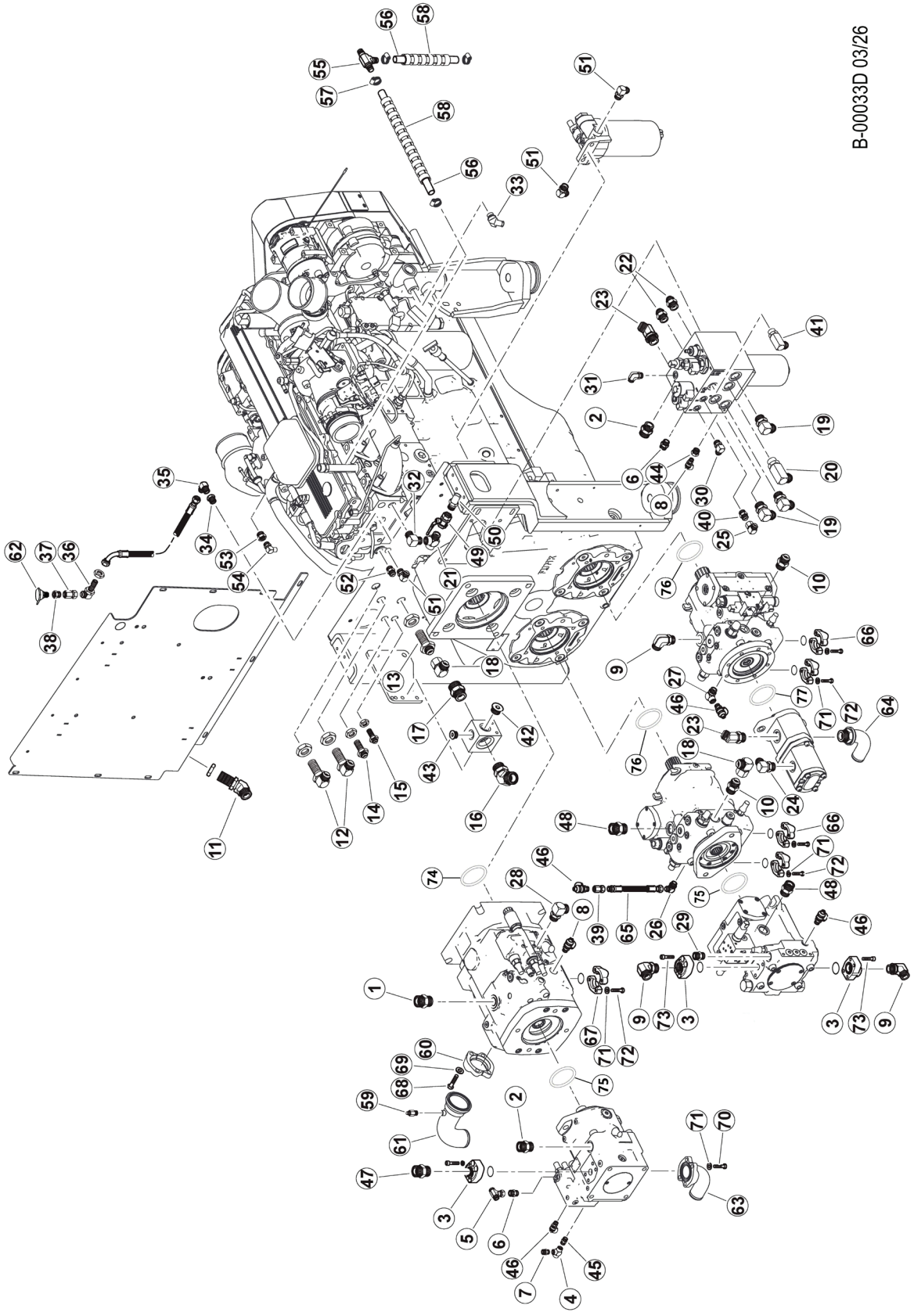

B-00033D 03/26

ADD MOLUB-ALLOY PASTE WHITE T, TO THE SPIINES ON ALL PUMPS

NOTE: HYDRAULIC FITTINGS GET 545 LOCTITE™

# B100-00000 - ENGINE HYDRAULIC FITTINGS

| Item | Part # | Description | Qty. |
|---|---|---|---|
| 50 | 51774 | CONNECTOR, STR HOSE BARB - .5 X 5/8 | 1 |
| 51 | 53073 | ELBOW, 90 6-JIC X 10-ORB | 2 |
| 52 | 53103 | FITTING, 6-8 - ORB-JIC | 1 |
| 53 | 58388 | REDUCER, M27-2 (M) ORING - 1/2 NPTF(F) | 1 |
| 54 | 58389 | ELBOW, 1/2 (M)NPTF - 3/8” TUBE (PUSH ON) | 1 |
| 55 | 57902 | TEE, HOSE BARB - 3/8” | 1 |
| 56 | 55411 | HOSE, COOLENT - 3/8” | AR |
| 57 | 16202 | CLAMP, HOSE - WORM STYLE - .625” | 4 |
| 58 | 27846 | WRAP, SPIRAL HOSE - 3/8”I.D. .052” WALL | AR |
| 59 | 55615 | FITTING, ADAPTOR - BLEED - SUCTION TUBE | 1 |
| 60 | 58139 | FLANGE, 13001H-5656K 175CC PUMP 57865 | 1 |
| 61 | 57880 | TUBE, SUCTION SERIES 40 175cc PUMP | 1 |
| 62 | 21304 | BREATHER, PUMP TRANSMISSION -TRIPLE PUMP | 1 |
| 63 | 55713 | FLANGE, ELBOW - 1988-32-32 | 1 |
| 64 | 57663 | FITTING, ELBOW - HOSE END 90° | 1 |
| 65 | 58063 | HOSE, GAUGE PORT EXTENSION | 1 |
| 66 | 15113 | KIT, SPLIT FLANGE - 1” (CODE 62) | 1 |
| 67 | 15114 | KIT, SPLIT FLANGE - 1.25” (CODE 62) | 1 |
| 68 | 58378 | BOLT - 5/8-11 X 1 3/4” HEX HEAD | 4 |
| 69 | 10771 | WASHER, SAE FLAT - .625” | 4 |
| 70 | 10739 | BOLT - .5” X 1.5” | 4 |
| 71 | 10710 | WASHER, LOCK - .5” | 24 |
| 72 | 10736 | BOLT - .5” X 2” | 20 |
| 73 | 35337 | SOC HD C/SCR | 4 |
| 74 | 15442-2 | O-RING, PUMP DRIVE PILOT - DRIVE | 1 |
| 75 | 19491 | ORING, THRU-DRIVE - 55458 | 2 |
| 76 | 53718 | ORING, TRACK DRIVE PUMP PILOT | 2 |
| 77 | 21624 | O-RING, CHARGE PUMP PILOT (AA4VG90) | 2 |

## B100-00000 - ENGINE HYDRAULIC FITTINGS

**NOTE: HYDRAULIC FITTINGS GET 545 LOCTITE™**

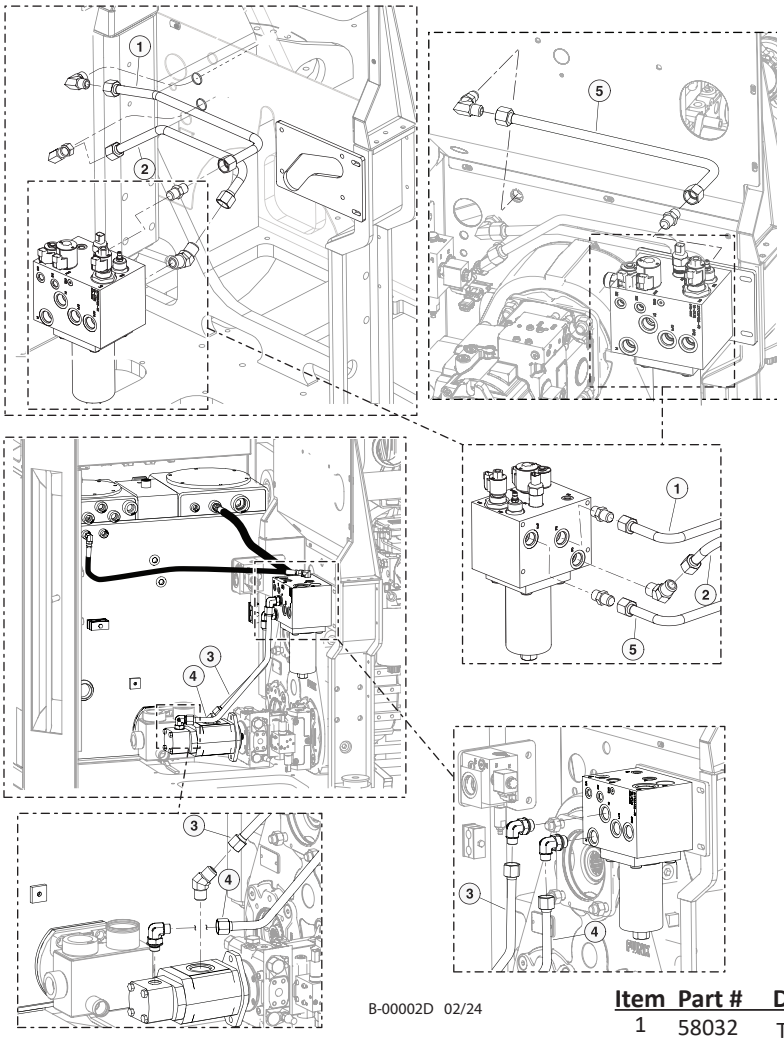

B-00002D 02/24

| Item | Part # | Description | QTY. |
|---|---|---|---|
| 1 | 58032 | TUBELINE, FR TO BULKHEAD FAN RETURN | 1 |
| 2 | 57929 | TUBELINE, F0 TO BULKHEAD FAN PRESSURE | 1 |
| 3 | 57928 | TUBELINE, F1 TO FRONT GEAR PUMP FAN PRES | 1 |
| 4 | 57927 | TUBELINE, C1 TO REAR GEAR PUMP | 1 |
| 5 | 57931 | TUBELINE, T2 TO BULKHEAD | 1 |

## B100-00020 - CHARGE PIPING - DRIVE PUMPS (MACHINE BUILD DATES UP TO 07/11/24)

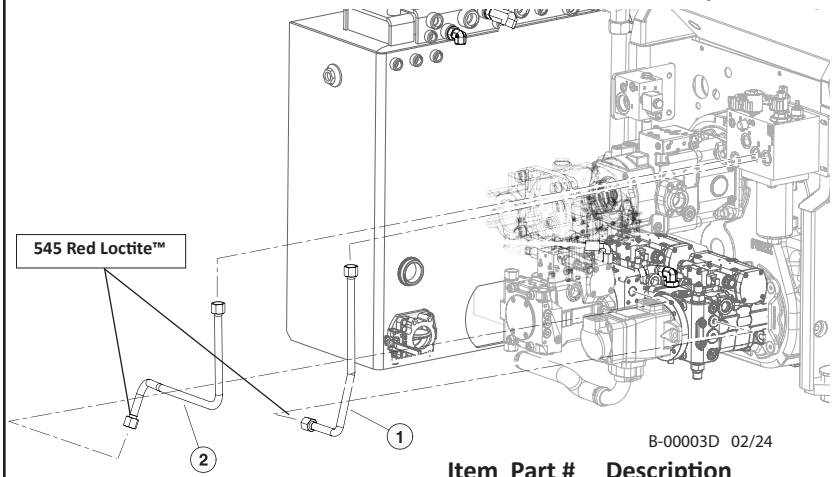


B-00003D 02/24

| Item | Part # | Description | QTY. |
|---|---|---|---|
| 1 | 57924 | TUBELINE, FA2 TO RIGHT TRACK PUMP **545 RED LOCTITE™** | 1 |
| 2 | 57925 | TUBELINE, FA1 TO LEFT TRACK PUMP **545 RED LOCTITE™** | 1 |

# B100-00030 - CHARGE PUMP PIPING (MACHINE BUILD DATES 07/12/24 AND FORWARD)

**NOTE: HYDRAULIC FITTINGS GET 545 LOCTITE™**

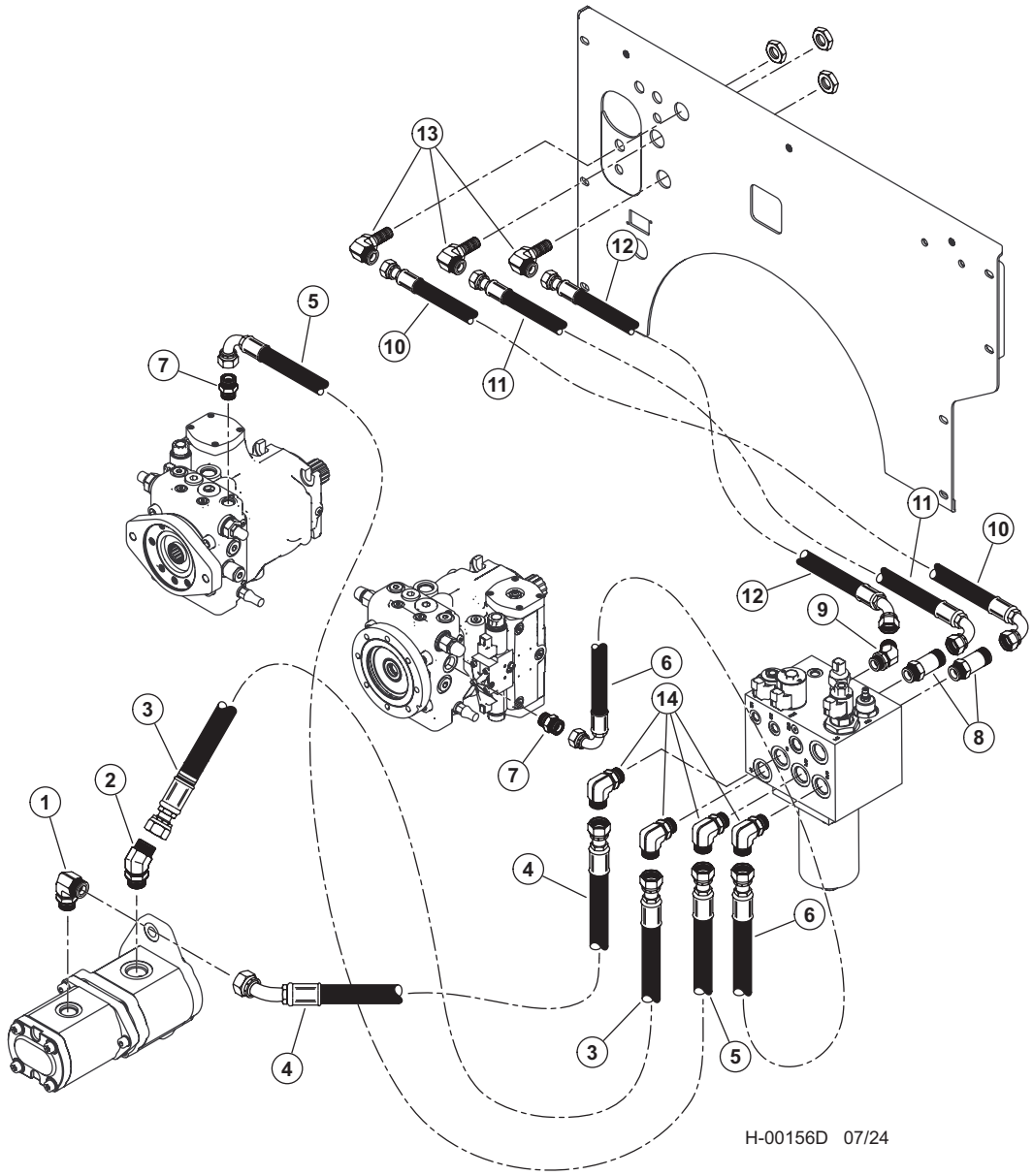


| Item | Part # | Description | Qty. |
|---|---|---|---|
| | 65696 | HOSE KIT, ENGINE TRACK MACHINE | 1 |
| 1 | 53032 | ELBOW, 90 - 12 JIC X 10 ORB | 1 |
| 2 | 15474 | ELBOW, 45 - 6802-12 | 1 |
| 3 | 656850 | HOSE, HYD, 722TC16.5 12-12JS-12JS | 1 |
| 4 | 656900 | HOSE, HYD, 187TC22 12-12JS-12J4 | 1 |
| 5 | 656890 | HOSE, HYD, 187TC30 12-12JS-12J9 | 1 |
| 6 | 656880 | HOSE, HYD, 187TC18.5 12-12JS-12J9 | 1 |
| 7 | 15494 | CONNECTOR, STR - 6400-12-10 | 2 |
| 8 | 19092 | CONNECTOR, STR LONG - 848L-TTO-12X12 | 2 |
| 9 | 19127 | ELBOW, 45 - FF2068T-1212S | 1 |
| 10 | 656870 | HOSE, HYD, 187TC20.5 12-12JS-12J9 | 1 |
| 11 | 656860 | HOSE, HYD, 187TC19 12-12JS-12J9 | 1 |
| 12 | 656840 | HOSE, HYD, 722TC19 12-12JS-12J4 | 1 |
| 13 | 54704 | ELBOW, 90 BULK 12 WETX-WLN-S | 3 |

# B100-00040 - ENGINE FUEL HOSES

**NOTE: HYDRAULIC FITTINGS GET 545 LOCTITE™**

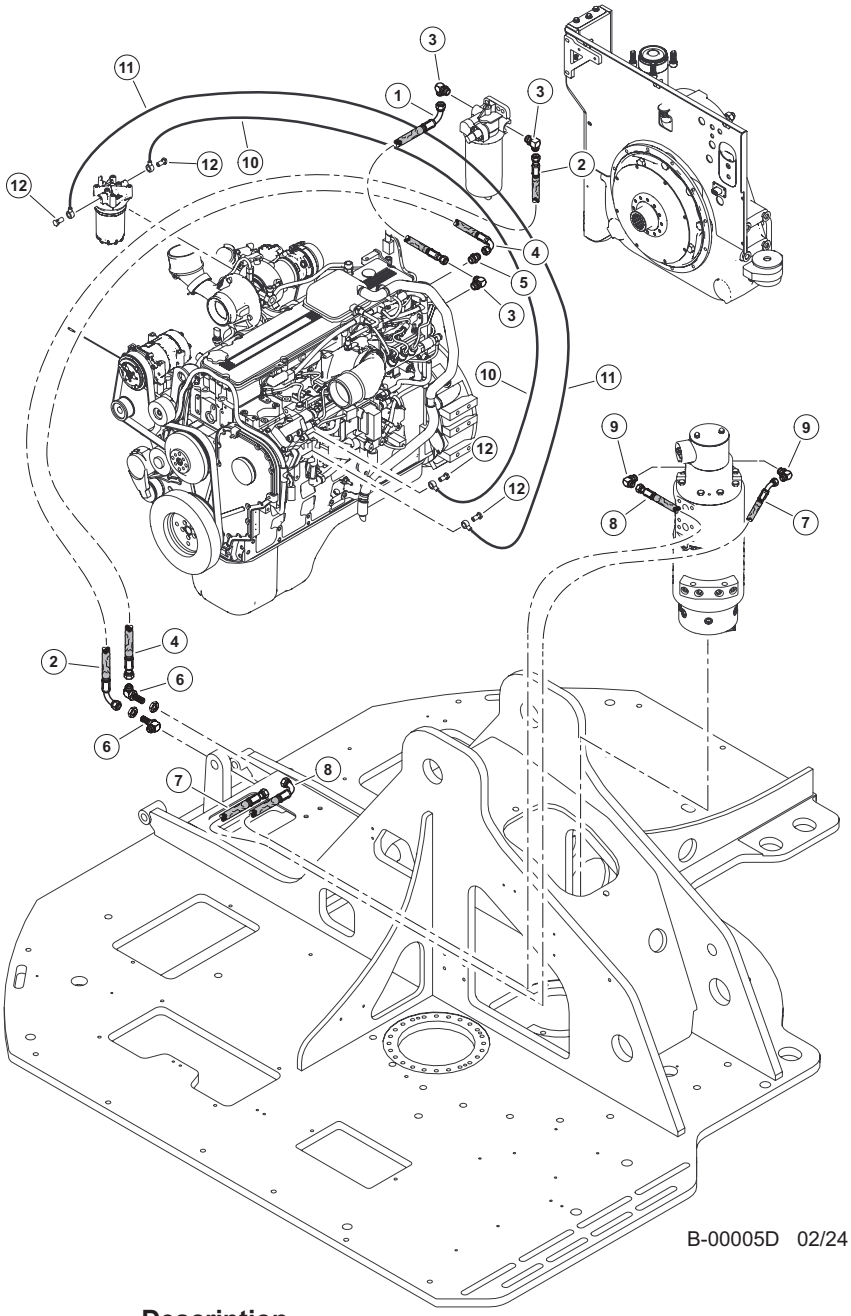


| Item | Part # | Description | Qty. |
|---|---|---|---|
| 1 | (HOSE KIT - 57998) | HOSE ASSEMBLY - 221FR25 06-06JS-06J9-W | 1 |
| 2 | (HOSE KIT - 57998) | HOSE ASSEMBLY - 221FR35 06-06JS-06J9-W | 1 |
| 3 | 53073 | ELBOW, 90 6-JIC X 10-ORB | 3 |
| 4 | (HOSE KIT - 57998) | HOSE ASSEMBLY - 221FR28 06-06JS-06J9-W | 1 |
| 5 | 53103 | FITTING, 6-8 - ORB-JIC 830-B | 1 |
| 6 | 55347 | FITTING, ELBOW - BULKHEAD 6 WETX-WLN-S | 2 |
| 7 | 65797 - (65792 - KIT) | HOSE, HYD, 221FR81 06-06FJ-06FJ4-W **- (FUEL SUPPLY TO RM)** | 1 |
| 8 | 65798 - (65792 - KIT) | HOSE, HYD, 221FR81 06-06FJ-06F9-W - **(FUEL RETURN TO RM)** | 1 |
| 9 | 15480 | ELBOW, 90 - 6801-6 | 2 |
| 10 | **SEE DESCRIPTION** | FUEL HOSE ASSEMBLY (CONTACT YOUR CUMMINS DEALER FOR REPLACEMENT PART) | - |
| 11 | **SEE DESCRIPTION** | FUEL HOSE ASSEMBLY (CONTACT YOUR CUMMINS DEALER FOR REPLACEMENT PART) | - |
| 12 | **SEE DESCRIPTION** | FUEL HOSE FITTING (CONTACT YOUR CUMMINS DEALER FOR REPLACEMENT PART) | - |

# B-2220000, B-2221000 - ENGINE PANELS

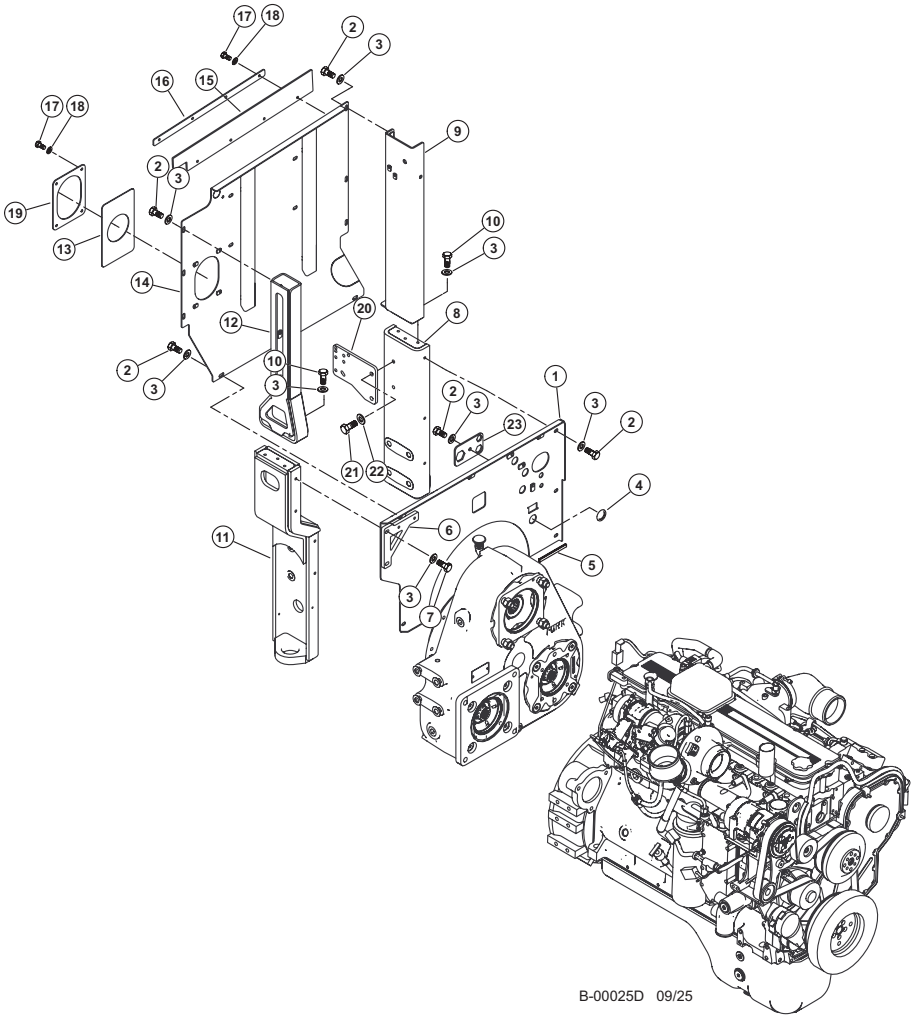


| Item | Part # | Description | Qty. |
|---|---|---|---|
| 1 | 603960 | WELDMENT, ENGINE BARRIER PANEL - STD | 1 |
| 2 | 15542 | BOLT - .375” X .75” **263 RED LOCTITE™** | 13 |
| 3 | 15528 | WASHER, SAE FLAT - .375” | 21 |
| 4 | 42514 | GROMMET, .875 I.D. | 1 |
| 5 | 53214 | CHANNEL, EDGE PROTECTOR | 6” |
| 6 | 60540 | PLATE, FUEL FILTER SPACER | 1 |
| 7 | 10402 | BOLT - .375” X 1.25” **263 RED LOCTITE™** | 2 |
| 8 | 60300 | MOUNT, ENGINE - INNER REAR | 1 |
| 9 | 603920 | WELDMENT, FIREWALL UPRIGHT | 1 |
| 10 | 11707 | BOLT - .375” X 1” **263 RED LOCTITE™** | 6 |
| 11 | 60295 | MOUNT, ENGINE - REAR | 1 |
| 12 | 60389 | WELDMENT, G-BOX UPPER - D SERIES | 1 |
| 13 | 673430 | SHEET, RUBBER SEAL | 1 |
| 14 | 632950 | WELDMENT, UPPER FIREWALL | 1 |
| 15 | 47206 | RUBBER, ENGINE BARRIER | 1 |
| 16 | 47205 | BAR, BARRIER PANEL - ENGINE | 1 |
| 17 | 15604 | BOLT - .25” X .75” **263 RED LOCTITE™** | 8 |
| 18 | 10757 | WASHER, SAE FLAT - .25” | 8 |
| 19 | 673440 | PLATE, SEAL SLOT | 1 |
| 20 | 60444 | MOUNT, MANIFOLD | 1 |
| 21 | 50100 | BOLT - .5" X 1.25" **263 RED LOCTITE™** | 2 |
| 22 | 10805 | WASHER, FLAT - .625" | 2 |
| 23 | 670830 | LOCK PLATE, STRAIGHT BULKHEAD - STD | 1 |

# B100-00060 - ENGINE INSTALLATION

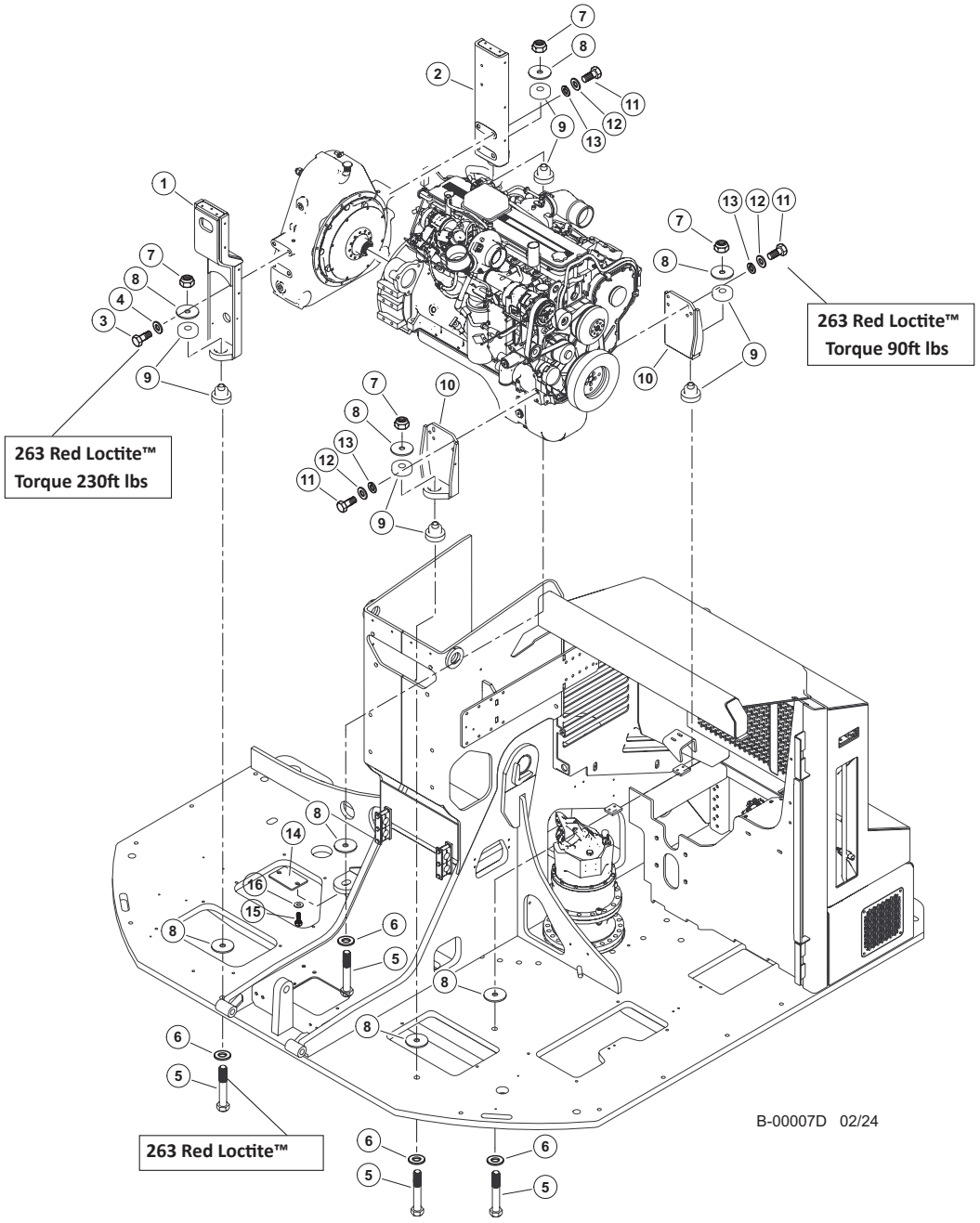


| Item | Part # | Description | Qty. |
|---|---|---|---|
| 1 | 60295 | MOUNT, ENGINE - REAR | 1 |
| 2 | 60392 | PLATE, UPPER G-BOX 2 - D SEREIS | 1 |
| 3 | 58378 | BOLT - 5/8-11 X 1 3/4" HEX HEAD **263 RED LOCTITE™ (TORQUE 230FT LBS)** | 8 |
| 4 | 10771 | WASHER, SAE FLAT - .625" | 8 |
| 5 | 21540 | BOLT - .875" X 6" **263 RED LOCTITE™** | 4 |
| 6 | 10718 | WASHER, SAE FLAT - .875" | 4 |
| 7 | 50334 | NUT, LOCK .875" | 4 |
| 8 | 60268 | WASHER, ENGINE MOUNT | 8 |
| 9 | 60270 | ISOLATOR, ENGINE MOUNT | 4 |
| 10 | 60269 | MOUNT, ENGINE - FRONT | 2 |
| 11 | 15551 | BOLT - 12MM-1.75P X 40MM **263 RED LOCTITE™ (TORQUE 90FT LBS)** | 8 |
| 12 | 18735 | WASHER, FLAT - 12MM | 8 |
| 13 | 53760 | WASHER, ENGINE MOUNT - SHURE-LOK | 8 |
| 14 | 60558 | COVER, RETAINER | 1 |
| 15 | 23264 | BOLT - .25" X .5" | 2 |
| 16 | 10757 | WASHER, SAE FLAT - .25" | 2 |

# B100-00070 - ENGINE SHROUD

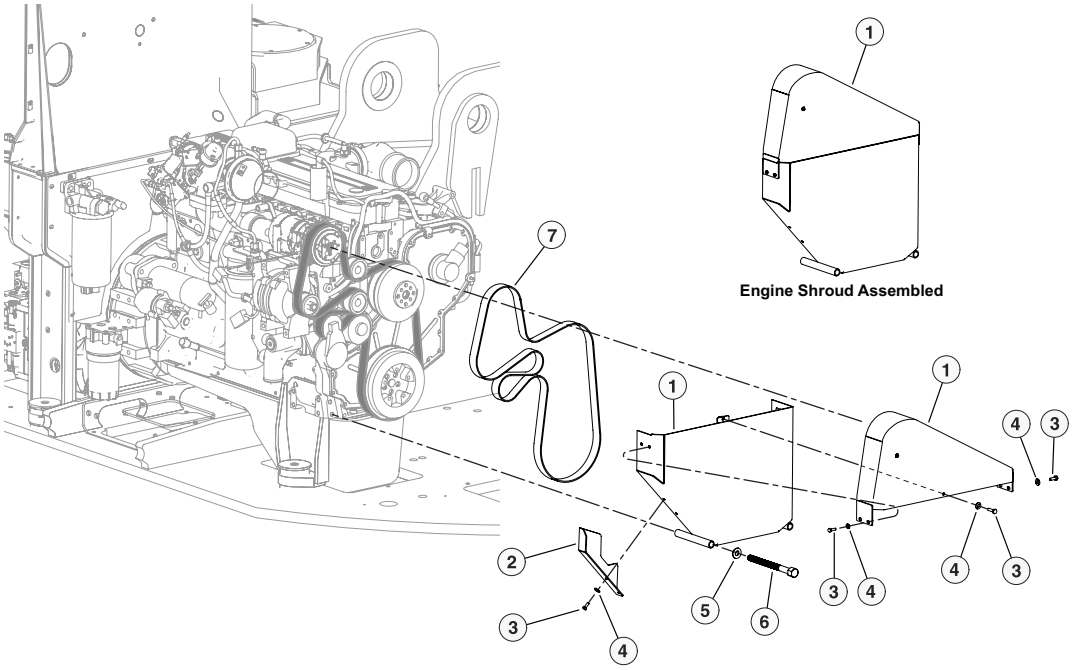


B-00008D 02/24

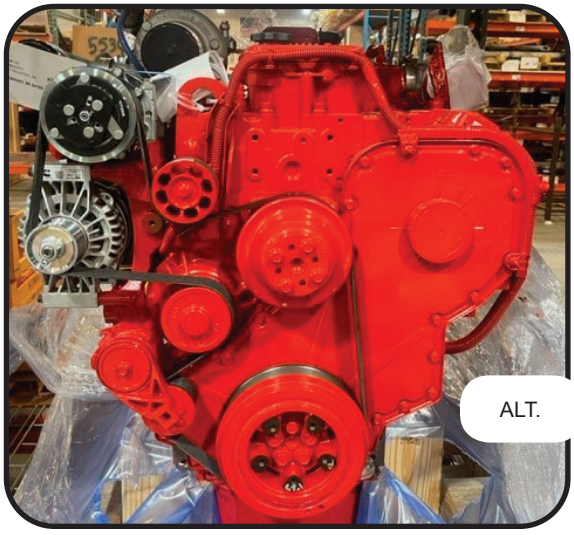

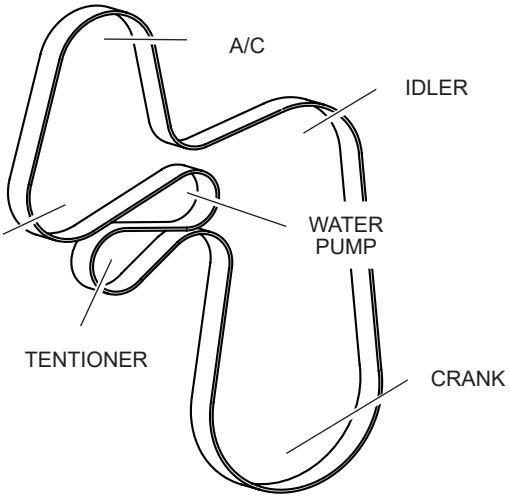


| Item | Part # | Description | Qty. |
|---|---|---|---|
| 1 | 60780 | GUARD, FAN - STAGE 5 | 1 |
| 2 | 46288 | SHROUD, FAN - BOTTOM | 1 |
| 3 | 15604 | BOLT - .25” X .75” | 2 |
| 4 | 10757 | WASHER, SAE FLAT - .25” | 2 |
| 5 | 51772 | BOLT - 12MM X 180MM FAN GUARD | 1 |
| 6 | 18735 | WASHER, FLAT - 12MM | 1 |
| 7 | 59058 | BELT, ENGINE | 1 |

# B100-00080 - ENGINE AIR INTAKE

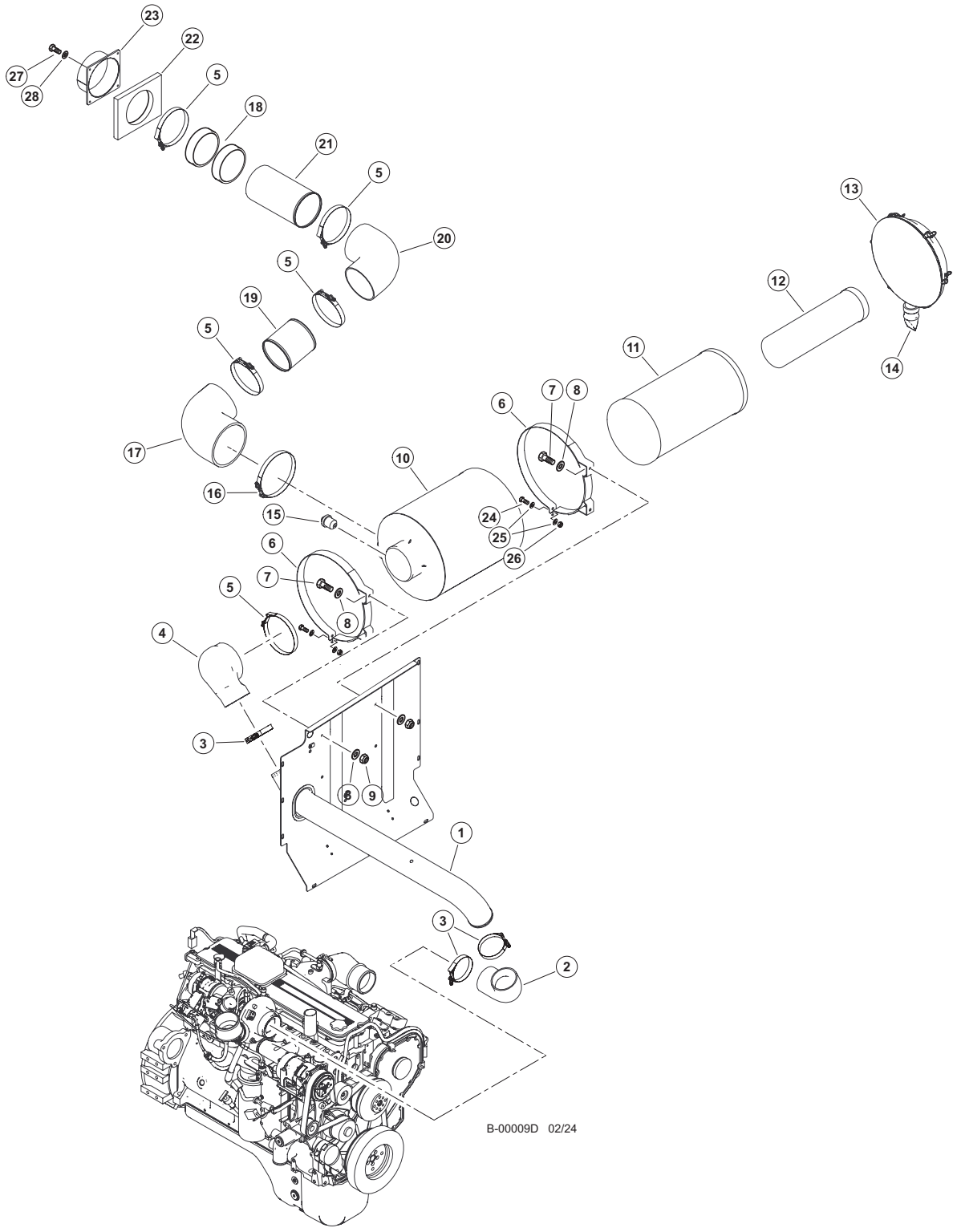

# B100-00080 - ENGINE AIR INTAKE

| Item | Part # | Description | Qty. |
|---|---|---|---|
| 1 | 63299 | TUBE, AIR CLEANER TO TURBO - WELDMENT | 1 |
| 2 | 55634 | ELBOW, RUBBER - 4” x 4” - CUMMINS | 1 |
| 3 | 15697 | CLAMP, STRAP BAND - 4.5” | 3 |
| 4 | 58981 | ELBOW, RUBBER - COBRA 6” X 4” | 1 |
| 5 | 58030 | CLAMP, T-BOLT - AIR INTAKE ELBOWS | 5 |
| 6 | 58260 | BAND, AIR CLEANER - TAILSWNG STG V | 2 |
| 7 | 11707 | BOLT - .375” X 1” | 4 |
| 8 | 10802 | WASHER, FLAT - .375” | 8 |
| 9 | 10813 | NUT, LOCK - .375” | 4 |
| 10 | 58136 | AIR CLEANER ASSEMBLY - STAGE V | 1 |
| 11 | 58276 | FILTER, AIR CLEANER - PRIMARY | 1 |
| 12 | 58277 | FILTER, AIR CLEANER - SECONDARY | 1 |
| 13 | 58275 | COVER, AIR CLEANER | 1 |
| 14 | 16608 | BOOT, AIR CLEANER DUST | 1 |
| 15 | 16114 | INDICATOR, AIR CLEANER FILTER SERVICE | 1 |
| 16 | 59004 | CLAMP, T-BOLT - 750 SIZE - LRG AIR CLEAN | 1 |
| 17 | 58985 | ELBOW, RUBBER 7X6 90DEG | 1 |
| 18 | 42378 | WEATHERSTRIPPING, WINDOW 5/16x3/4x500’ | 38” |
| 19 | 60548 | TUBE, 6” - AIR INTAKE | 1 |
| 20 | 57495 | ELBOW, RUBBER - 90 DEGREE 6” X 6” | 1 |
| 21 | 63303 | TUBE, AIR CLEANER 6” X 11” D-MOD | 1 |
| 22 | 47344 | FOAM | AR |
| 23 | 60820 | AIR INTAKE | 1 |
| 24 | 15591 | BOLT - .3125” X 1.5” | 2 |
| 25 | 10801 | WASHER, FLAT - .3125” | 4 |
| 26 | 10812 | NUT, LOCK - .3125” | 2 |
| 27 | 15604 | BOLT - .25” X .75” | 4 |
| 28 | 10757 | WASHER, SAE FLAT - .25” | 4 |

# B100-00090 - ENGINE AFTER TREATMENT

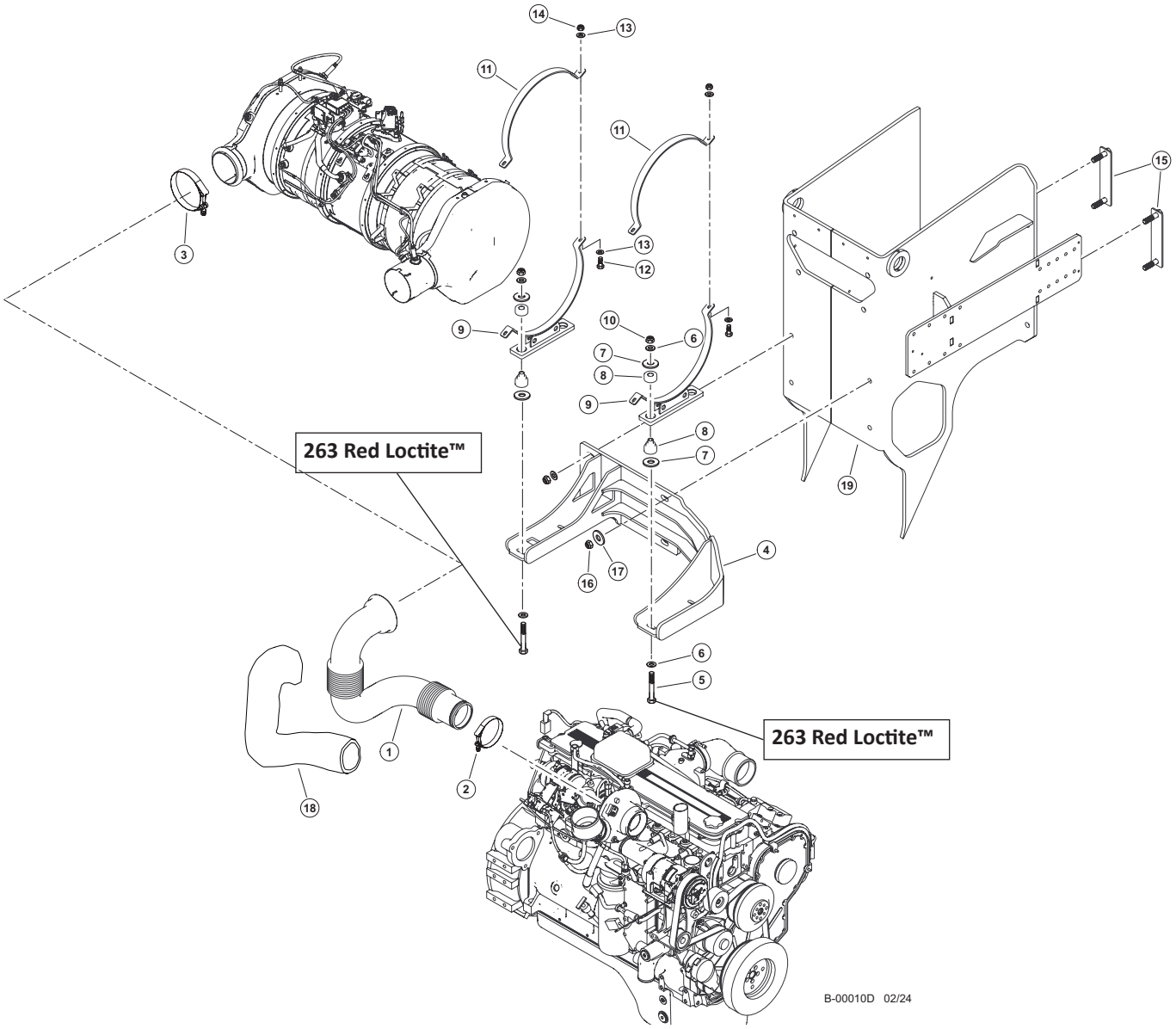


| Item | Part # | Description | Qty. |
|---|---|---|---|
| 1 | 60260 | PIPE, EXHAUST TURBO TO DOC | 1 |
| 2 | NA | CLAMP (CONTACT YOUR CUMMINS DEALER FOR REPLACEMENT PART) | - |
| 3 | NA | CLAMP (CONTACT YOUR CUMMINS DEALER FOR REPLACEMENT PART) | - |
| 4 | 65395 | WELDMENT, ATFER TREATMENT MOUNT | 1 |
| 5 | 15553 | BOLT - .5” X 3.5” **263 RED LOCTITE™** | 4 |
| 6 | 10804 | WASHER, FLAT - .5” | 8 |
| 7 | 46674 | WASHER, FENDER - ISOLATOR | 8 |
| 8 | 55560 | ISOLATOR, RUBBER - MUFFLER - T4F | 4 |
| 9 | 60380 | WELDMENT, SCR MTG CLAMP | 2 |
| 10 | 10815 | NUT, LOCK - .5” | 4 |
| 11 | 60381 | STRAP, SINGLE CAN MOUNT - AFTER TREATMENT | 2 |
| 12 | 10822 | BOLT - .3125” X 1.25” | 4 |
| 13 | 10801 | WASHER, FLAT - .3125” | 8 |
| 14 | 10812 | NUT, LOCK - .3125” | 4 |
| 15 | 60109 | PLATE, SCR STUD | 2 |
| 16 | 10816 | NUT, LOCK - .625” | 4 |
| 17 | 10805 | WASHER, FLAT - .625” | 4 |
| 18 | 57841 | INSULATION, EXHAUST PIPE | 1 |
| 19 | 47975 | WELDMENT, BOOM SURRROUND D-STAGE 5 | 1 |

# B100-00100 - TRIPPLE DRIVE GEARBOX INSTALLATION

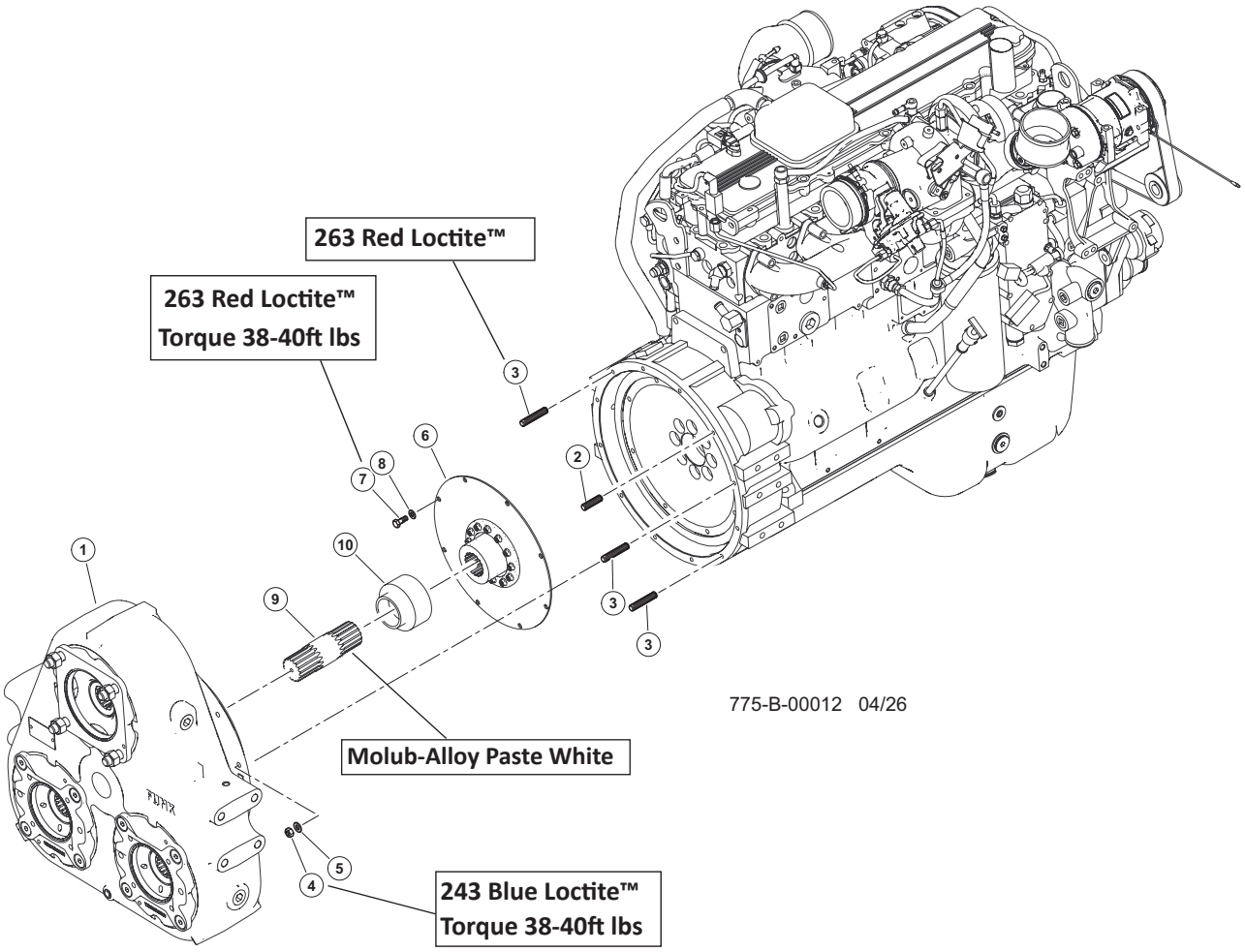


| Item | Part # | Description | Qty. |
|---|---|---|---|
| 1 | 55673 | TRANSMISSION, TRIPLE PUMP DRIVE (2000 rpm) | 1 |
| 2 | 15531 | STUD, 10MM -1.5P X 45MM | 1 |
| 3 | 59093 | STUD, M10-1.5X60MM **263 RED LOCTITE™** | 11 |
| 4 | 15530 | NUT, HEX - 10MM-1.5P **243 BLUE LOCTITE™ (TORQUE 38-40FT LBS)** | 12 |
| 5 | 23722 | WASHER, LOCK -10MM | 12 |
| 6 | 18028 | DRIVEPLATE ASSY. | 1 |
| 7 | 15542 | BOLT - .375" X .75" **263 RED LOCTITE™ (TORQUE 38-40FT LBS)** | 8 |
| 8 | 15528 | WASHER, SAE FLAT - .375" | 8 |
| | ***(MUST VERIFY SHAFT BEFORE PLACING ORDER)** | | |
| 9 | *65144 | STANDARD SHAFT, 175 PUMP | 1 |
| 9 | *65157 | LONG SHAFT, 175 PUMP | 1 |
| 10 | 65483 | SEAL, GREASE - PUMP DRIVE | 1 |

# B100-00101 - TRIPPLE DRIVE GEARBOX

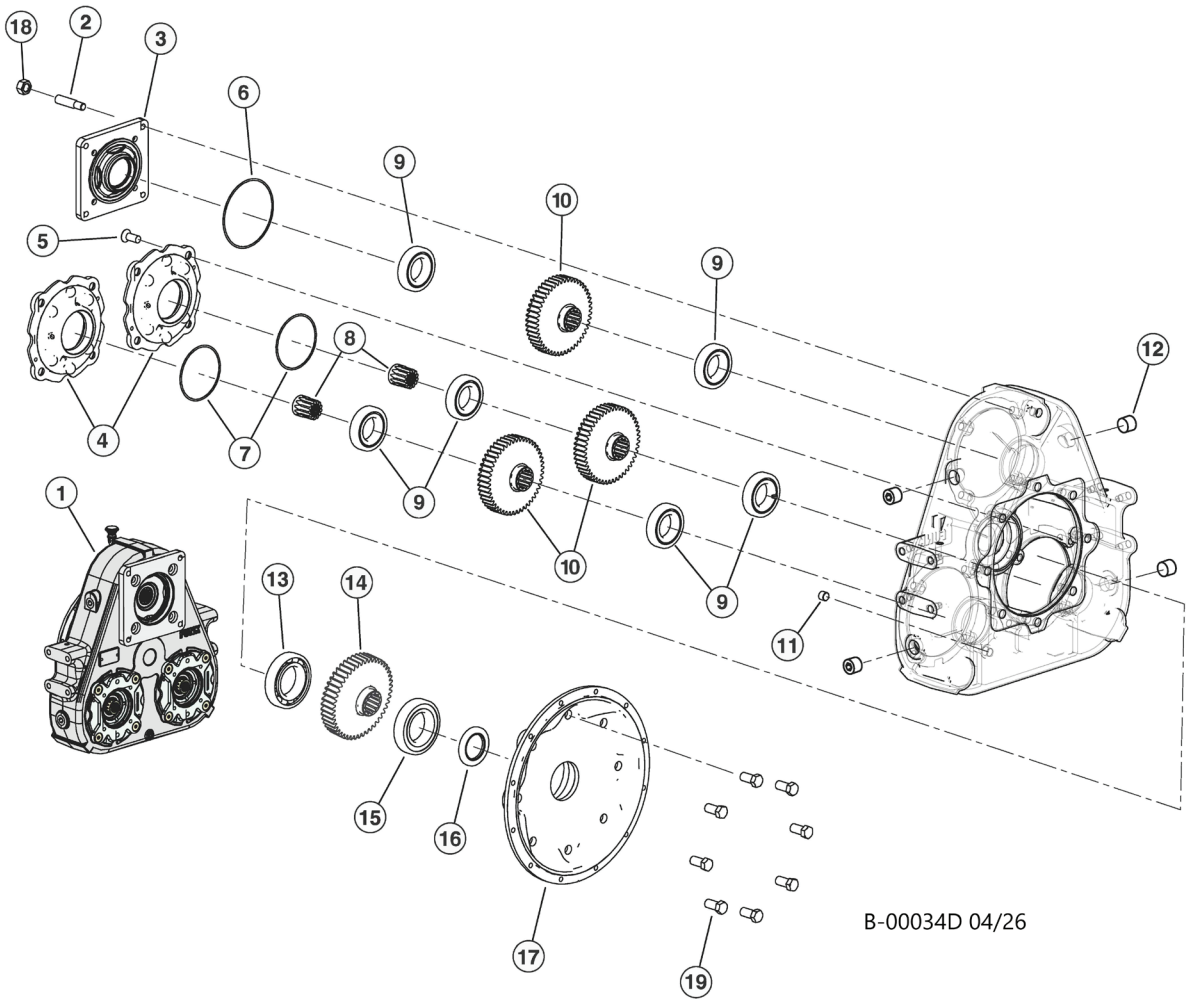


| Item | Part # | Description | Qty. |
|---|---|---|---|
| 1 | 55673 | TRANSMISSION, TRIPLE PUMP DRIVE | 1 |
| 2 | 18293 | STUD, FUNK - D PAD ADAPTER | 4 |
| 3 | 18292 | ADAPTER, PUMP PAD - SAE D (FUNK IMP) | 1 |
| 4 | 54767 | ADAPTER, PUMP PAD - SAE C - TRACK PUMP | 2 |
| 5 | F1122824 | FASTENER | 8 |
| 6 | F37030258 | O-RING | 1 |
| 7 | F37030248 | O-RING | 2 |
| 8 | 16330 | ADAPTER, SPLINE - FUNK | 2 |
| 9 | YZ104564 | BEARING | 6 |
| 10 | 65576 | GEAR, LONG NOSE, 47T FUNK GB | 3 |
| 11 | F202004 | PLUG | 1 |
| 12 | F1900316 | PLUG | 4 |
| 13 | 18892 | BEARING, FUNK TRI DRIVE - CENTER | 1 |
| 14 | 54401 | GEAR, FUNK TRIPLE - CENTER | 1 |
| 15 | 18891 | BEARING, FUNK TRI DRIVE - CENTER | 1 |
| 16 | 18027 | SEAL, SHAFT - FUNK | 1 |
| 17 | 4059412 | COVER | 1 |
| | **(MUST VERIFY SHAFT BEFORE PLACING ORDER)** | | |
| 18 | F13015000 | NUT | 8 |
| 19 | F1008024 | FASTENER | 4 |

# B100-00103 - TRIPPLE DRIVE GEARBOX BREATHER

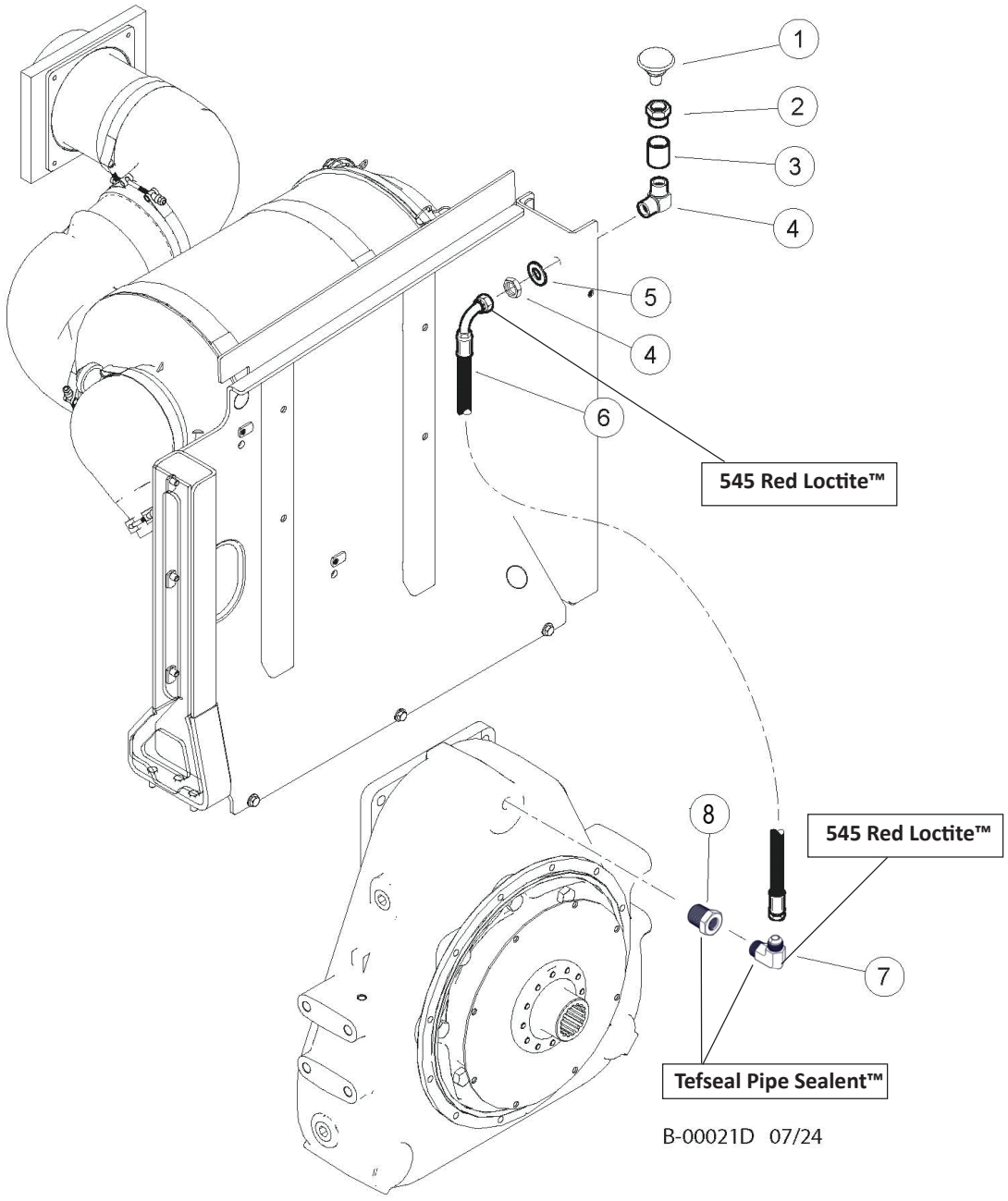


| Item | Part # | Description | Qty. |
|---|---|---|---|
| 1 | 21304 | BREATHER, PUMP TRANSMISSION -TRIPLE PUMP | 1 |
| 2 | 11318 | BUSHING, REDUCER - 5406-6-4 | 1 |
| 3 | 57422 | FITTING, 6-6 G6X-S | 1 |
| 4 | 55347 | FITTING, ELBOW - BULKHEAD 6 WETX-WLN-S | 1 |
| 5 | 23210 | 5/8" TRU TORQ, EXTRA THICK FLAT WASHER: 15/64" THICK, 21/32" ID, 1 5/16" | 1 |
| 6 | 65938 - (65868 - KIT) | HOSE, HYD, 387TC38 06-06JS-06J9 **(BREATHER) 545 RED LOCTITE™** | 1 |
| 7 | 55205 | FITTING, ELBOW - 6 CTX-S **TEFSEAL PIPE SEALENT™** | 1 |
| 8 | 11312 | BUSHING, REDUCER - 5406-8-4 **TEFSEAL PIPE SEALENT™** | 1 |

# B100-00110 - HEATER HOSES

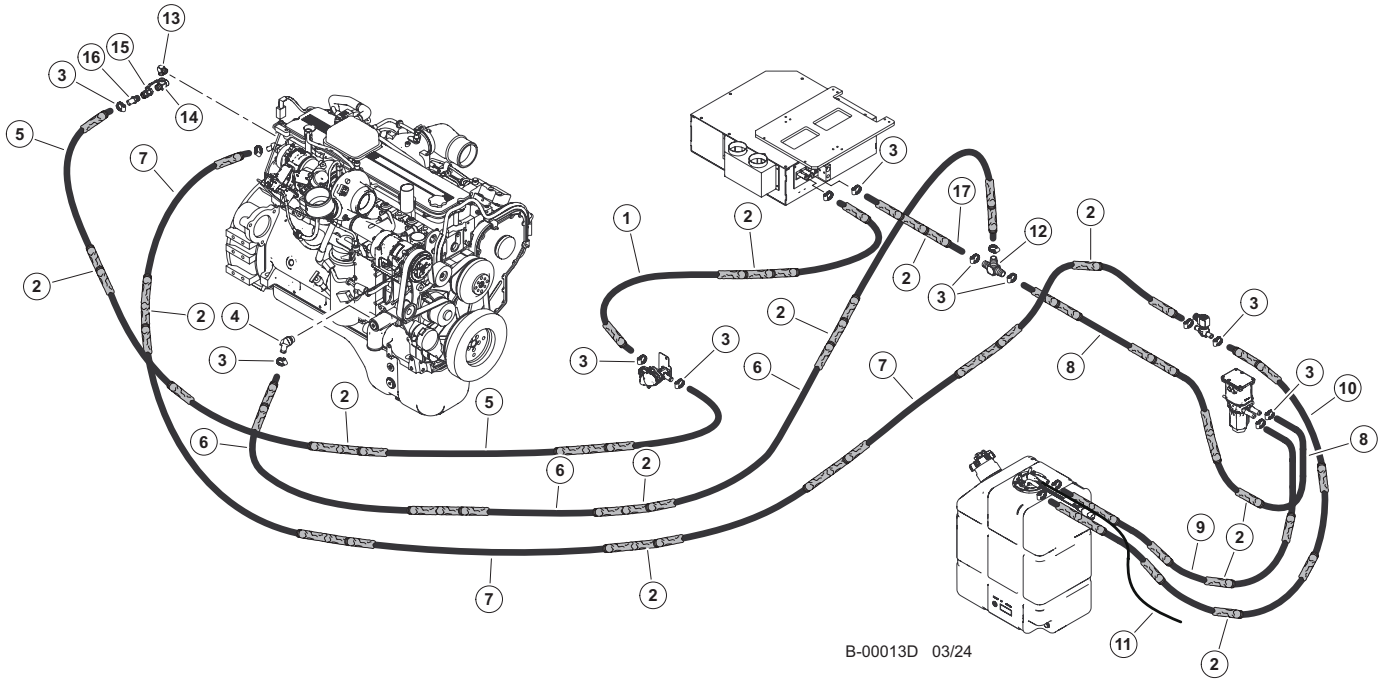


| Item | Part # | Description | Qty. |
|---|---|---|---|
| 1 | BH-565 | 5/8” HEATER HOSE | 1 |
| 2 | 50188 | SLEEVE, PROTECTIVE HOSE | AR |
| 3 | 58977 | CLAMP, HOSE - AC UPDATE | 16 |
| 4 | 57805 | FITTING, 179HB-10-8 | 1 |
| 5 | 54780 | HOSE, HEATER - 5/8” X 110” WRAPPED | 1 |
| 6 | 54780 | HOSE, HEATER - 5/8” X 110” WRAPPED | 1 |
| 7 | 58114 | HOSE, HEATER 5/8 X 140 WRAPPED SCR VALVE | 1 |
| 8 | 58024 | HOSE, HEATER - 5/8” X 64” (GATES 28473) | 1 |
| 9 | 58024 | HOSE, HEATER - 5/8” X 64” (GATES 28473) | 1 |
| 10 | 58024 | HOSE, HEATER - 5/8” X 64” (GATES 28473) | 1 |
| 11 | 16238 | HOSE, VENT (BULK ROLL) - .3125” | 3’ |
| 12 | 57903 | TEE, HOSE BARB - 5/8” PIPE | 1 |
| 13 | 52785 | ELBOW, MALE PIPE - ¾ X ½ CR-S | 1 |
| 14 | 51879 | TEE, RUN - .5” (1/2 MR0-S) | 1 |
| 15 | 51714 | VALVE, BALL - WATER SHUT OFF HEATER 1/2” | 1 |
| 16 | 51774 | CONNECTOR, STR HOSE BARB - .5 X 5/8 (830 | 1 |
| 17 | BH-566 | 5/8” HEATER HOSE | 1 |

# B100-00120 - ENGINE SHIELDS

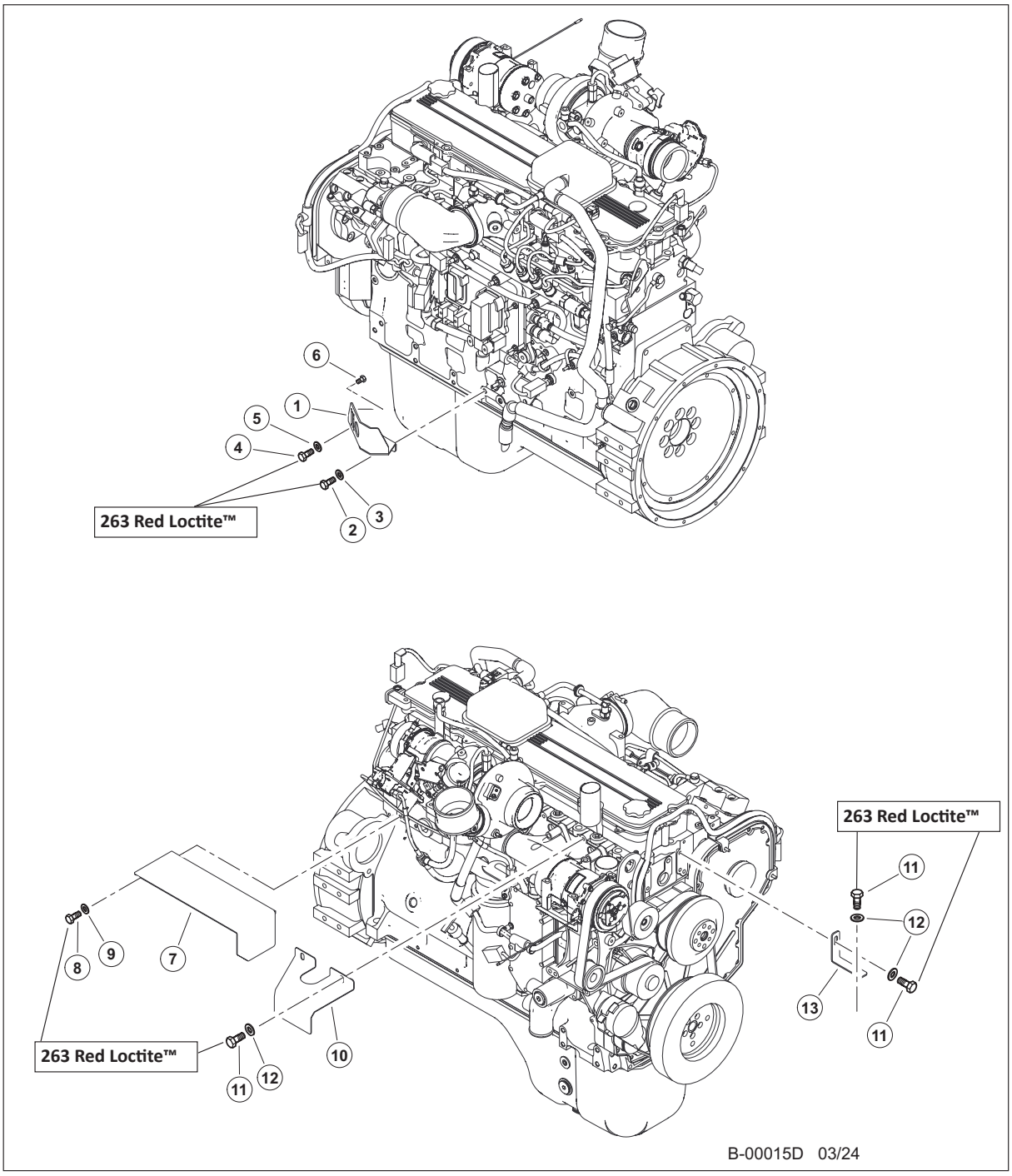


| Item | Part # | Description | Qty. |
|---|---|---|---|
| 1 | 60833 | PLATE, ECM BH MOUNT | 1 |
| 2 | 15556 | BOLT - 12MM-1.75P X 20MM **263 RED LOCTITE™** | 1 |
| 3 | 18735 | WASHER, FLAT - 12MM | 1 |
| 4 | 17395 | BOLT - 10MM-1.5P X 20MM **263 RED LOCTITE™** | 1 |
| 5 | 15528 | WASHER, SAE FLAT - .375” OR 3/8” | 1 |
| 6 | 59100 | SCREW, SELF TAP #10-24 X 1/2"L | 2 |
| 7 | 46199 | SHIELD, STARTER - CUMMINS | 1 |
| 8 | 25059 | BOLT - 8MM-1.25P X 20MM **263 RED LOCTITE™** | 2 |
| 9 | 15559 | WASHER, SAE FLAT - .3125” | 2 |
| 10 | 60825 | PANEL, HEAT SHIELD - STAGE V | 1 |
| 11 | 17395 | BOLT - 10MM-1.5P X 20MM **263 RED LOCTITE™** | 4 |
| 12 | 15528 | WASHER, SAE FLAT - .375” OR 3/8” | 4 |
| 13 | 693360 | WELDMENT, SUPPORT, ENGINE SHROUD | 1 |

# B100-00130 - ELECTRICAL LOAD CENTER

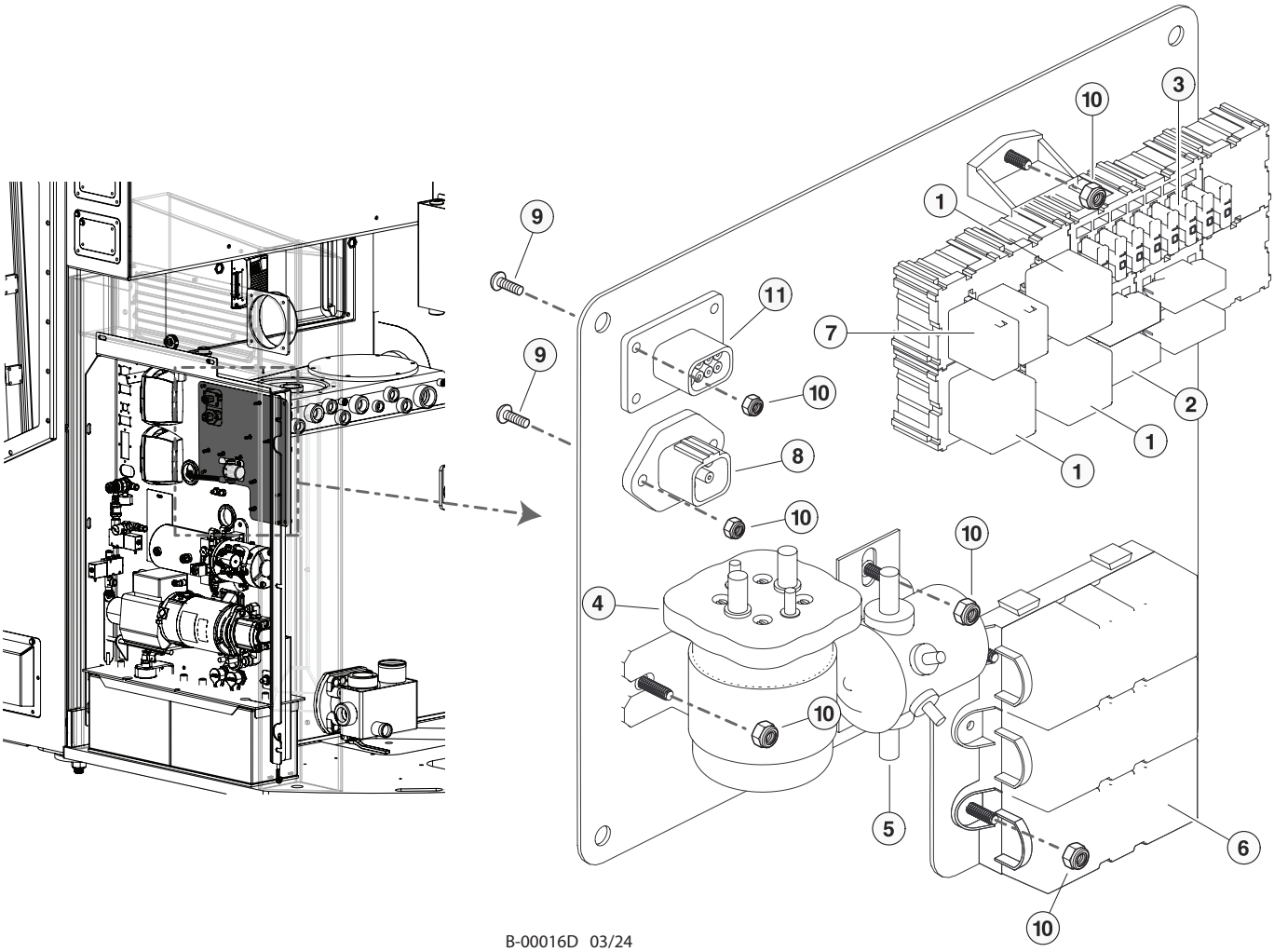


B-00016D 03/24

| Item | Part # | Description | Qty. |
|---|---|---|---|
| | 46695 | LOAD CENTER - ENG COMP MD4 C-SERIES | |
| 1 | 51755 | RELAY, 70 AMP - LIGHTS/FILL PUMP/ACCESOR | 3 |
| 2 | 21892 | RELAY, 70 AMP - LIGHTS/FILL PUMP/ACCESOR | 2 |
| | 21893 | FUSE, MAXI - 50 AMP (SPADE STYLE) | 2 |
| 3 | 24512 | FUSE, ATO - 10 AMP (SPADE STYLE) | 4 |
| | 51754 | FUSE, ATO - 20 AMP (SPADE STYLE) | 1 |
| | 50401 | FUSE, ATO - 30 AMP (SPADE STYLE) | 1 |
| 4 | 25117 | RELAY, START SIGNAL 24-V (WHITE/ROGERS) | 1 |
| 5 | 25199 | RELAY, START/GRID 24-V (COLE HERSEE) | 1 |
| 6 | 23619 | FUSE, 100 AMP (MEGA) | 3 |
| 7 | 53645 | RELAY, ZETTLER AZ988-1C-24DE-C1 (LATCH) | 2 |
| | 21890 | FUSE, MINI - 5 AMP (SPADE STYLE) | 1 |
| | 21887 | FUSE, MINI - 15 AMP (SPADE STYLE) | 1 |
| 8 | DTP04-4P-L012 | 4 PIN RECEPTACLE | 1 |
| 9 | 81465 | BUTTON HEAD CAP SCREW STEEL #10-24 X 3/4” | 4 |
| 10 | 16131 | NUT, NYLOCK - #10-24 | 16 |
| 11 | DTP04-08P-L012 | 8 PIN RECEPTACLE | 1 |

# B100-00140 - ELECTRICIAL CENTER

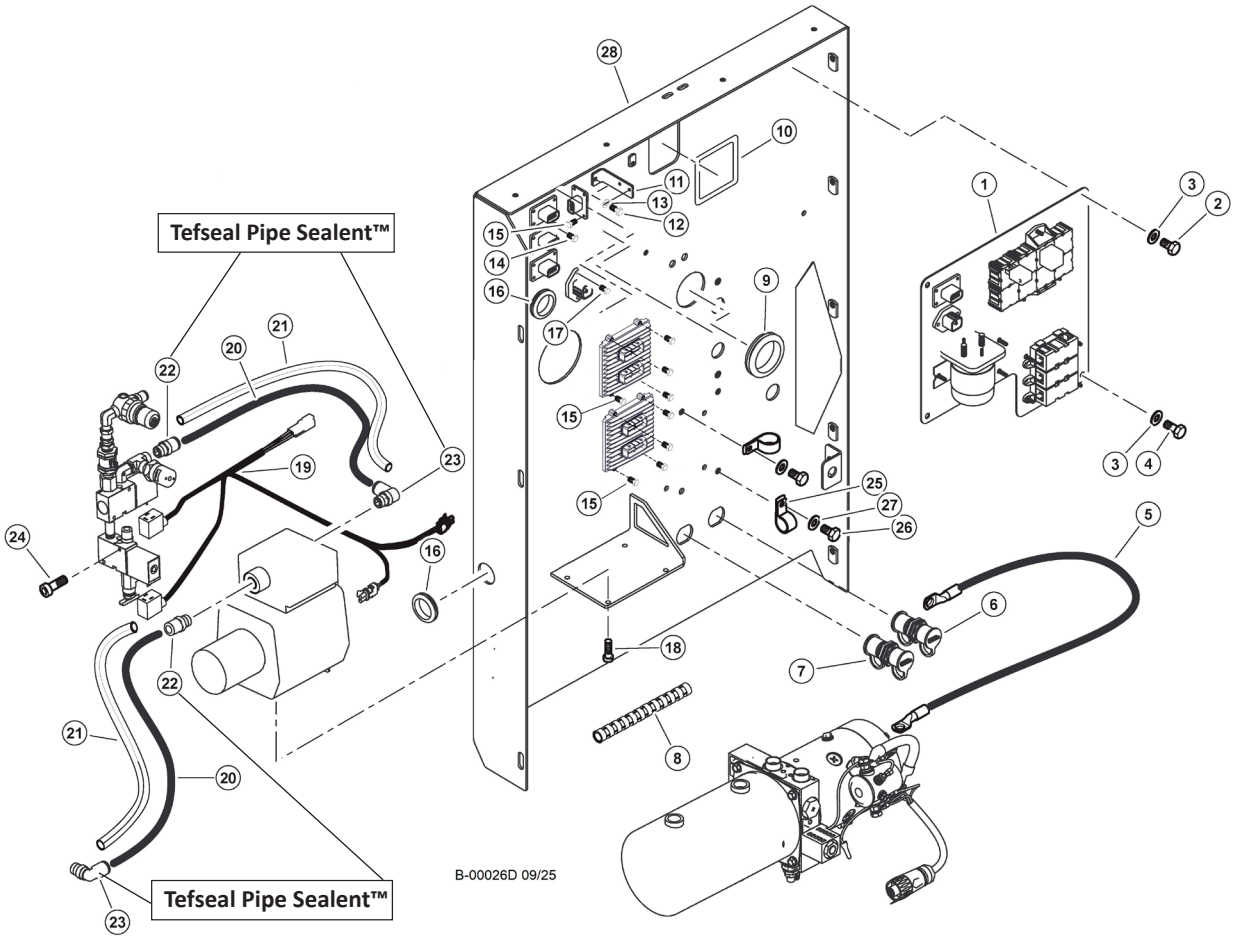


| Item | Part # | Description | Qty. |
|---|---|---|---|
| 1 | 46695 | LOAD CENTER - ENG COMP MD4 C-SERIES | 1 |
| 2 | 23264 | BOLT - .25” X .5” | 3 |
| 3 | 10757 | WASHER, SAE FLAT - .25” | 4 |
| 4 | 18309 | BOLT - .25” X 1.25” | 1 |
| 5 | 55366 | CABLE, BATTERY - NEGATIVE - 24” | 1 |
| 6 | 54642 | STUD, THRU BATTERY CABLE 1/2” NEGATIVE | 1 |
| 7 | 54343 | STUD, THRU BATTERY CABLE POSITIVE | 1 |
| 8 | 27846 | WRAP, SPIRAL HOSE - 3/8”I.D. .052” WALL | AR |
| 9 | 53088 | GROMMET, PROTECTOR | 1 |
| 10 | 55012 | WEATHERSTRIPPING, RUBBER-DOOR SEAL THIN | 1’ |
| 11 | 46407 | BRACKET, PLUG MOUNT | 1 |
| 12 | 23264 | BOLT - .25” X .5” | 1 |
| 13 | 10757 | WASHER, SAE FLAT - .25” | 1 |
| 14 | 53685 | SCREW - #8-32 X .5” (SELF TAPPING) | 12 |
| 15 | 692850 | SCREW, SELF TAP #10-24 X 1.0" | 10 |
| 16 | 57899 | GROMMET, RUBBER - 1” ID X 1.75” OD | 2 |
| 17 | 80498 | CAP SCREW GRADE 12.9 M5-0.8 X 12MM | 2 |
| 18 | 81491 | BUTTON HEAD CAP SCREW STEEL #10-32 X 1/2” | 4 |
| 19 | 55193 | HARNESS, VAC VENT FILL | 1 |
| 20 | 51738 | HOSE, VACUUM PUMP 3/8” PUSH ON | AR |
| 21 | 17449 | LOOM, SPLIT - .5” (BULK) | AR |
| 22 | 52506 | CONNECTOR, STR - PUSH HOSE - 1/4” VACUUM **TEFSEAL PIPE SEALANT™** | 2 |
| 23 | 51739 | CONNECTOR, ELBOW-PUSH ON (VACUUM) (1/4”) **TEFSEAL PIPE SEALANT™** | 2 |
| 24 | 94290 | CAP SCREW ALLOY STEEL #8-32 X 1-1/4” | 2 |
| 25 | 59092 | P-CLIP, 1/2" ID, CUSHIONED | 2 |
| 26 | 15605 | BOLT - .3125” X .75” | 2 |
| 27 | 15559 | WASHER, SAE FLAT - .3125” | 2 |
| 28 | 607970 | PANEL, ELECTRICAL CENTER | 1 |

# B100-00150 - HYDRAULIC FITTING KIT - ELECTRICAL PANEL

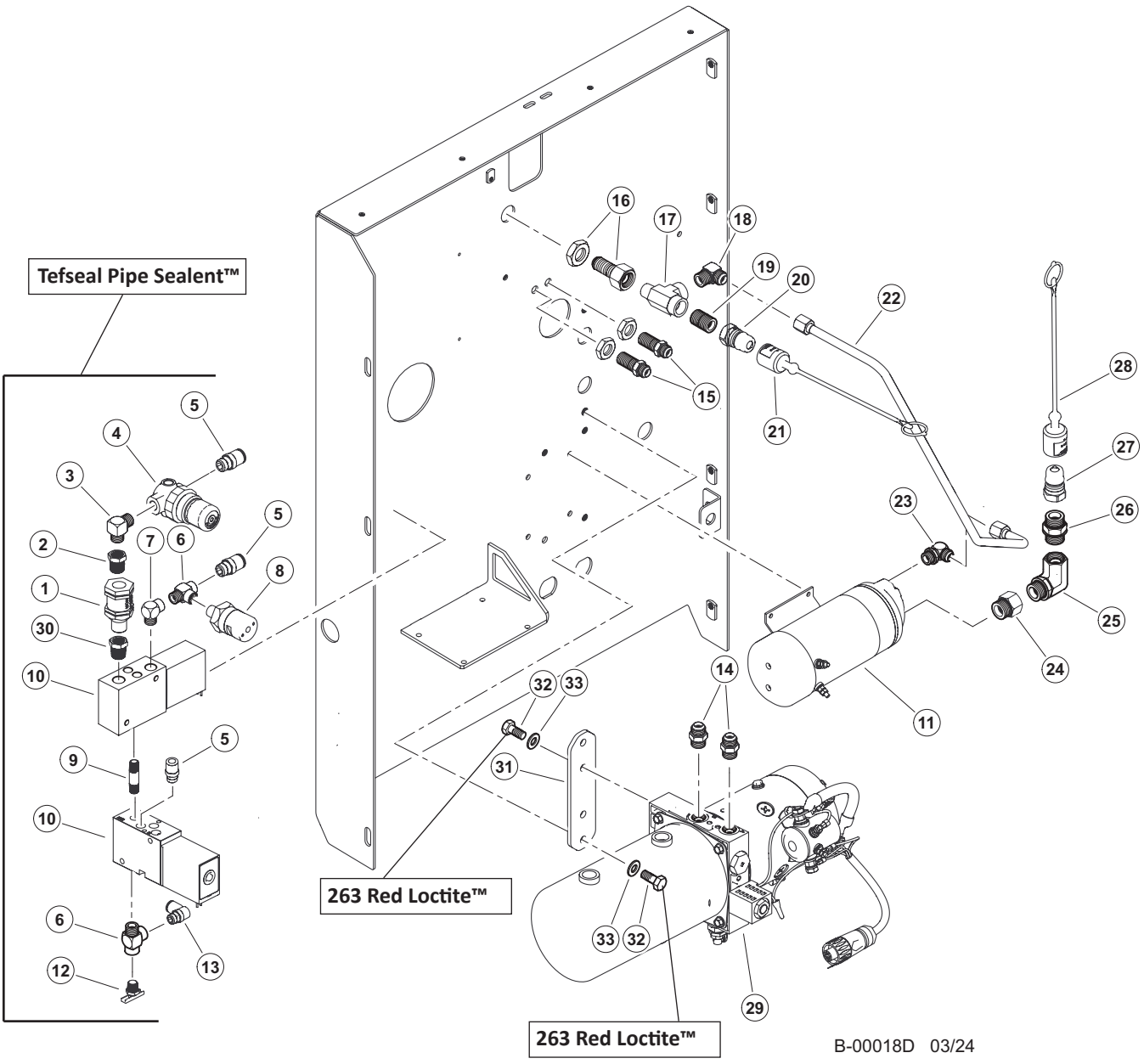

# B100-00150 - HYDRAULIC FITTING KIT - ELECTRICAL PANEL

| Item | Part # | Description | Qty. |
|---|---|---|---|
| | 57488 | KIT, FITTING - ELECTRICAL PANEL | |
| 1 | *15652 | VALVE, CHECK - HYDRAULIC/FUEL **TEFSEAL PIPE SEALANT™** | 1 |
| 2 | *11318 | BUSHING, REDUCER - 5406-6-4 **TEFSEAL PIPE SEALANT™** | 1 |
| 3 | *52741 | ELBOW, MALE PIPE - 1/4 CR-S **TEFSEAL PIPE SEALANT™** | 1 |
| 4 | 15649 | REGULATOR, TURBO BOOST | 1 |
| 5 | 52506 | CONNECTOR, STR - PUSH HOSE - 1/4” VACUUM **TEFSEAL PIPE SEALANT™** | 3 |
| 6 | *10393 | TEE - 1/4 MRO **TEFSEAL PIPE SEALANT™** | 2 |
| 7 | *21147 | ELBOW, 90 STREET .25” NPT - BRASS **TEFSEAL PIPE SEALANT™** | 1 |
| 8 | 51737 | SWITCH, PRESSURE - VACUUM PUMP **TEFSEAL PIPE SEALANT™** | 1 |
| 9 | 16314 | NIPPLE, PIPE - .25” X 2” **TEFSEAL PIPE SEALANT™** | 1 |
| 10 | 51616 | VALVE, 3-WAY VACUUM PUMP | 2 |
| 11 | 55691 | PUMP, HYDRAULIC OIL FILL - HYDAC (24 VOLT) | 1 |
| 12 | 53108 | PETCOCK, HYD TANK VENT/RAD DRAIN 1/4 **TEFSEAL PIPE SEALANT™** | 1 |
| 13 | 51739 | CONNECTOR, ELBOW -PUSH ON (VACUUM) (1/4”) **TEFSEAL PIPE SEALANT™** | 1 |
| 14 | *54809 | CONNECTOR, STR - 4 JIC x -6 ORB | 2 |
| 15 | *54808 | 90° BULKHEAD UNION ELBOW -4 JIC WITH L/N | 2 |
| 16 | 54799 | BULKHEAD CONN -8JIC X-8 ORB | 1 |
| 17 | *51879 | TEE, RUN - .5” (1/2 MR0-S) | 1 |
| 18 | *55697 | FITTING, ELBOW - MALE - 8-8 CTX-S | 1 |
| 19 | 16126 | NIPPLE, CLOSE - 1/2” | 1 |
| 20 | *17307M | QUICK DISCONNECT - .5” (MALE) | 1 |
| 21 | *17323F | COVER, DUST - QUICK DISCONNECT (FEMALE) | 1 |
| 22 | 57664 | TUBELINE, FILL PUMP - ALL MACHINES | 1 |
| 23 | *55712 | FITTING, ELBOW - MALE 8-8C4OMXS | 1 |
| 24 | *55711 | FITTING, 3/4 - 12F40HG55 | 1 |
| 25 | *22383 | ELBOW, 90 - 12 AOEG5-S | 1 |
| 26 | 54998 | FITTING, FILL PUMP | 1 |
| 27 | *55620 | NIPPLE, 60 SERIES - H6-63-T12 | 1 |
| 28 | *55617 | CAP, QUICK CONNECT - RUBBER (RED) | 1 |
| 29 | 51577 | PUMP, POWER UNIT - GULLWING W/PEND | 1 |
| 30 | *52145 | ADAPTER, EXPANDER - 3/8 X 1/4 FG-S **TEFSEAL PIPE SEALANT™** | 1 |
| 31 | 47542 | PLATE, GULLWING PUMP | 1 |
| 32 | 15542 | BOLT - .375” X .75” **263 RED LOCTITE™** | 4 |
| 33 | 15528 | WASHER, SAE FLAT - .375” | 4 |

**(* EQUALS ITEMS INCLUDED IN KIT #54788)**

# B100-00155 - ELECTRICAL PANEL S/N: UP TO 1237

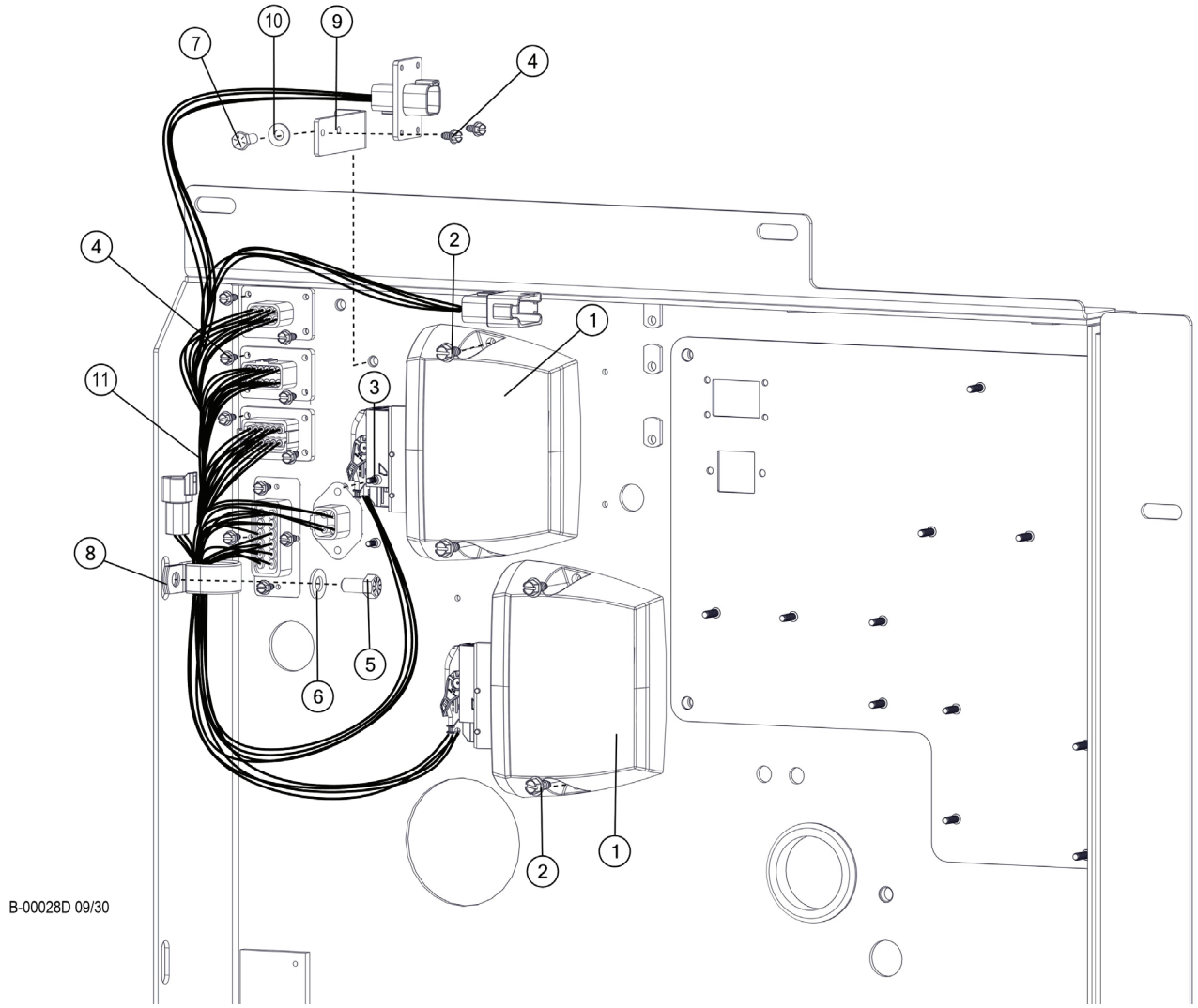


| Item | Part # | Description | Qty. |
|---|---|---|---|
| 1 | 53095 | MODULE, XA2 - IQAN | 2 |
| 2 | 59100 | SCREW, SELF TAP #10-24 X 1/2"L | 4 |
| 3 | 59101 | SCREW, M5-0.8 x 12, SOCKET HEAD | 2 |
| 4 | 59100 | SCREW, SELF TAP #10-24 X 1/2"L | 12 |
| 5 | 11707 | BOLT - .375" X 1" | 1 |
| 6 | 15528 | WASHER, SAE FLAT - .375" | 1 |
| 7 | 23264 | BOLT - .25" X .5" | 1 |
| 8 | 16119 | CLAMP, HOSE - COATED STRAP - 1" | 1 |
| 9 | 46407 | BRACKET, PLUG MOUNT | 1 |
| 10 | 10757 | WASHER, SAE FLAT - .25" | 1 |
| 11 | 55460 | HARNESS, XA2 MODULE - C SERIES | 12 |

# B100-00160 - ELECTRICAL PANEL S/N: 1238 & FORWARD

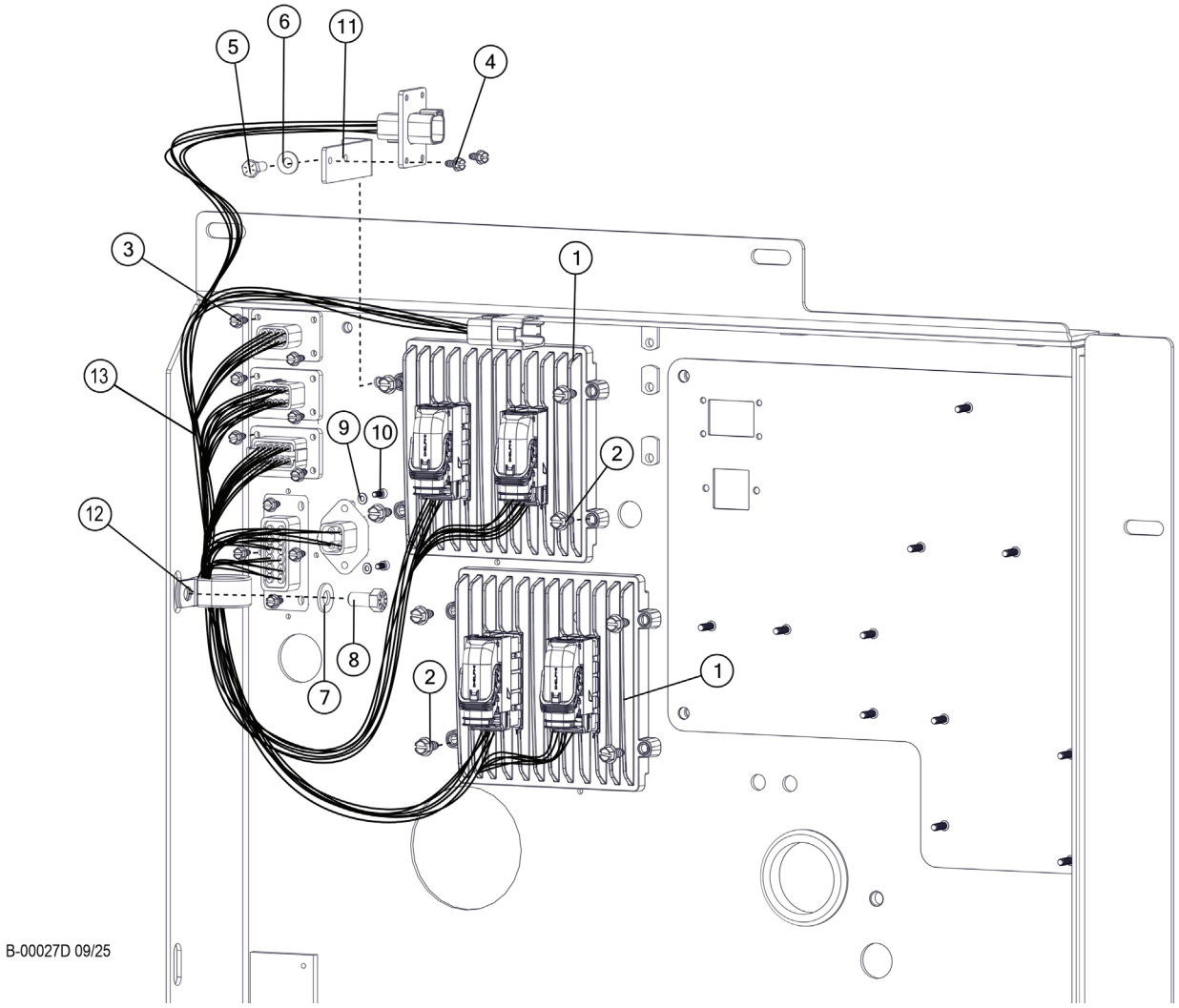


| Item | Part # | Description | Qty. |
|---|---|---|---|
| 1 | 669510 | MODULE, EXPANSION - IQAN XC43 | 2 |
| 2 | 692850 | SCREW, SELF TAP #10-24 X 1.0" | 8 |
| 3 | 59102 | SCREW, #8-32 X 1/2"L, HEX HD, SELF TAP | 10 |
| 4 | 59100 | SCREW, SELF TAP #10-24 X 1/2"L | 2 |
| 5 | 23264 | BOLT - .25" X .5" | 1 |
| 6 | 10757 | WASHER, SAE FLAT - .25" | 1 |
| 7 | 15528 | WASHER, SAE FLAT - .375" | 1 |
| 8 | 11707 | BOLT - .375" X 1" | 1 |
| 9 | 692840 | WASHER, SAE FLAT - #6 | 2 |
| 10 | 692830 | BOLT, SHCS M4-0.7 X 12 GR 12.9 | 2 |
| 11 | 46407 | BRACKET, PLUG MOUNT | 1 |
| 12 | 16119 | CLAMP, HOSE - COATED STRAP - 1" | 1 |
| 13 | 692860 | HARNESS, EXTERIOR, XC43 | 1 |

# B100-00165 - ELECTRICAL PANEL INSTALLATION

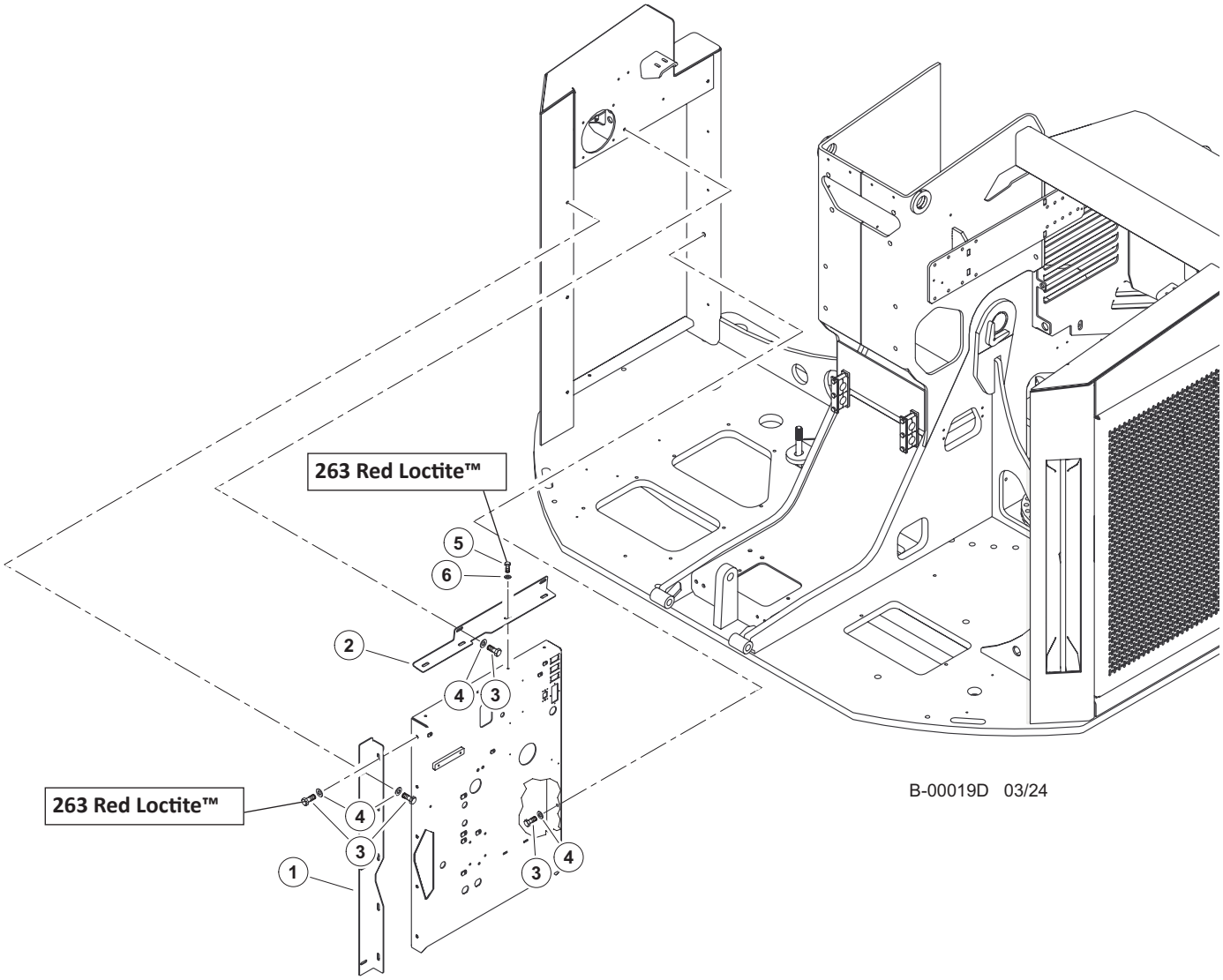


| Item | Part # | Description | Qty. |
|---|---|---|---|
| 1 | 47268 | ANGLE, MOUNTING - ELECTRICAL PANEL | 1 |
| 2 | 47870 | ANGLE, MOUNTING - ELECTRICAL PANEL | 1 |
| 3 | 15542 | BOLT - .375” X .75” **263 RED LOCTITE™** | 11 |
| 4 | 15528 | WASHER, SAE FLAT - .375” | 13 |
| 5 | 15604 | BOLT - .25” X .75” **263 RED LOCTITE™** | 4 |
| 6 | 10800 | WASHER, FLAT - .25” | 4 |

# B100-00170 - 120V ENGINE BLOCK HEATER

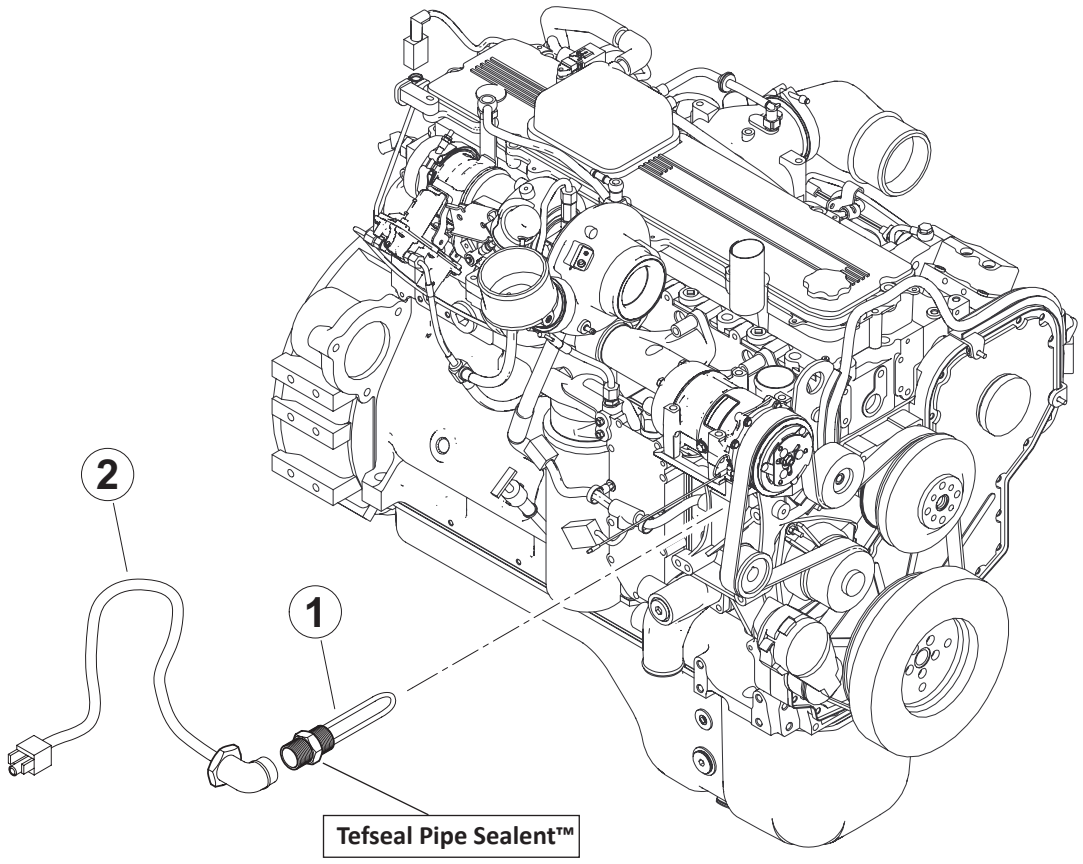


B-00020D 03/24

| Item | Part # | Description | Qty. |
|---|---|---|---|
| 1 | 24377 | HEATER, ENGINE BLOCK (CUMMINS QSC-1000W) **TEFSEAL PIPE SEALANT™** | 1 |
| 2 | 58344 | CORD, ENGINE HEATER | 1 |

# COOLING SYSTEM - (C)

# C100-00000 - COOLER FAN AND MOTOR INSTALLATION

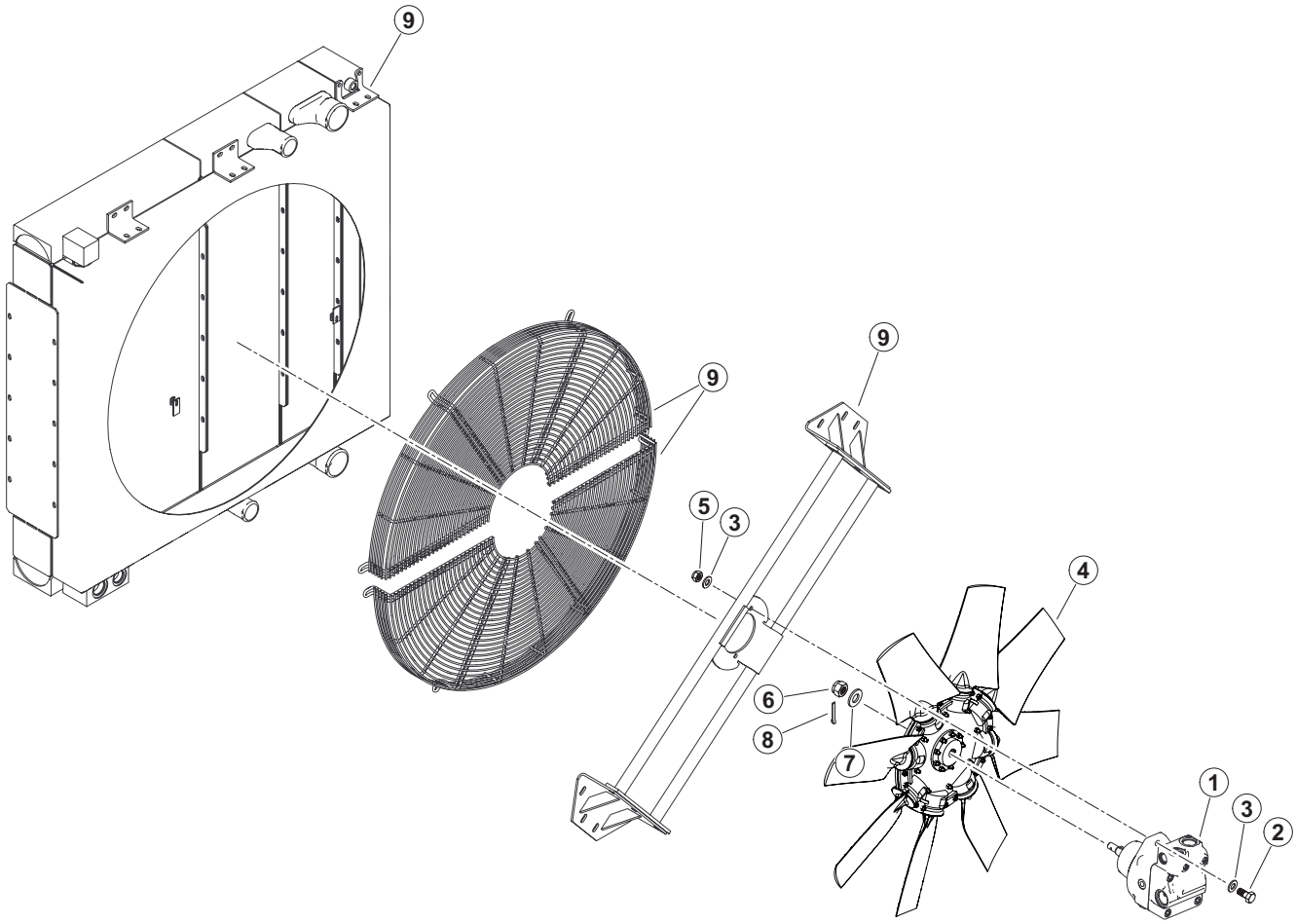


C-00001D 03/24

| Item | Part # | Description | Qty. |
|---|---|---|---|
| 1 | 55215 | MOTOR, FAN DRIVE - RADIATOR W/FAN CONTROL | 1 |
| 2 | 18933 | BOLT - .5” X 1.75” | 2 |
| 3 | 15534 | WASHER, SAE FLAT - .5” | 4 |
| 4 | 58129 | FAN, RADIATOR - 42” | 1 |
| 5 | 10815 | NUT, LOCK - .5” | 2 |
| 6 | 53189 | NUT, CASTLE - M16-1.5 | 1 |
| 7 | 10771 | WASHER, SAE FLAT - .625” | 1 |
| 8 | 59109 | PIN, COTTER, 1/8 x 1.0 | 1 |
| 9 | 58238 | RADIATOR / OIL COOLER - STAGE V # 24 PORT | 1 |

# C100-00001 - COOLING FAN MOTOR COMPONENTS

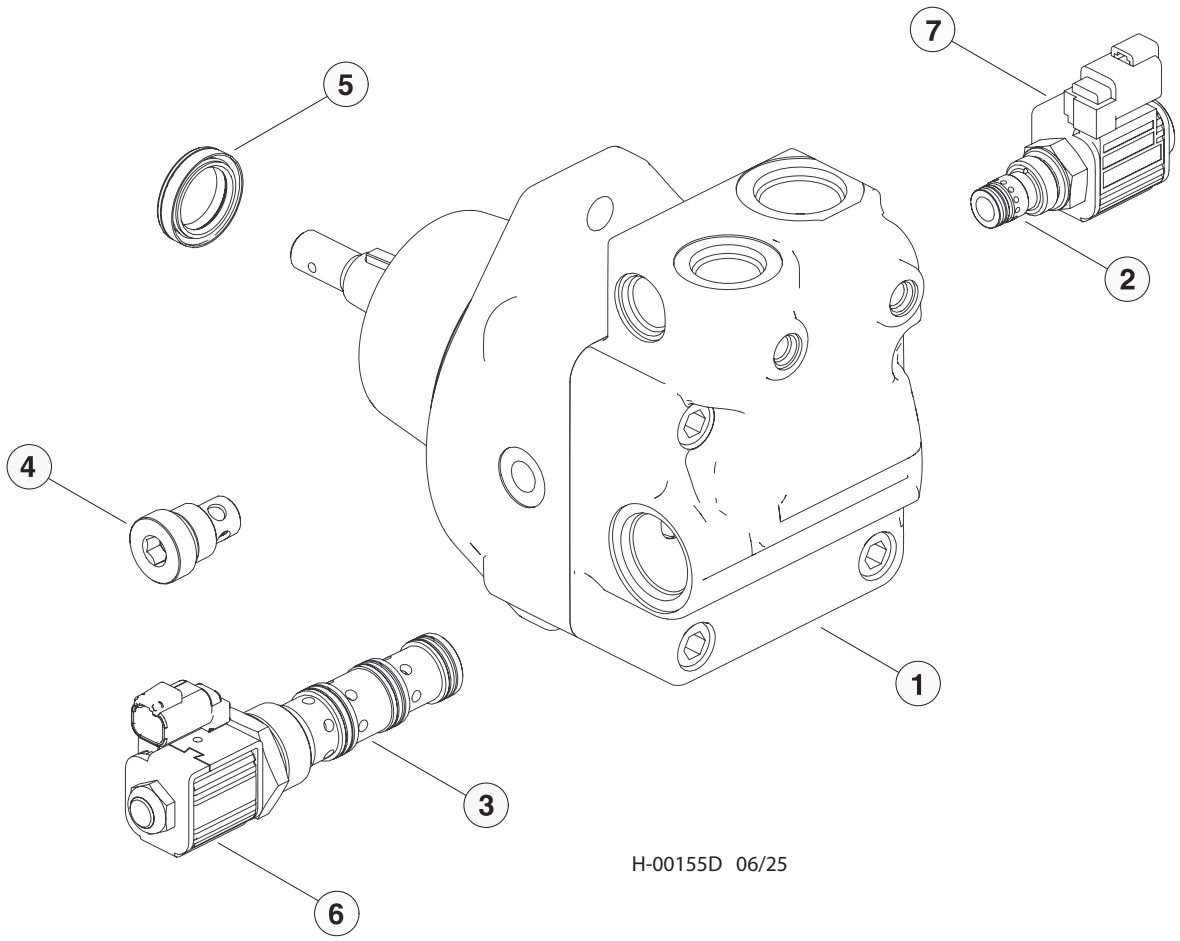


| Item | Part # | Description | Qty. |
|---|---|---|---|
| 1 | 55215 | MOTOR, FAN DRIVE - RADIATOR W/FAN CONTR0L | 1 |
| 2 | 57603 | VALVE, PROPORT. FAN MOTOR (SMALL) | 1 |
| 3 | 57604 | VALVE, REVERSING FAN MOTOR (LARGE) | 1 |
| 4 | 58171 | ASSEMBLY, CHECK VALVE | 1 |
| 5 | 57688 | SHAFT SEAL | 1 |
| 6 | 59069 | COIL, REVERSING FAN | 1 |
| 7 | CCP024H | COIL | 1 |

# C100-00002 - COOLER BREAKDOWN

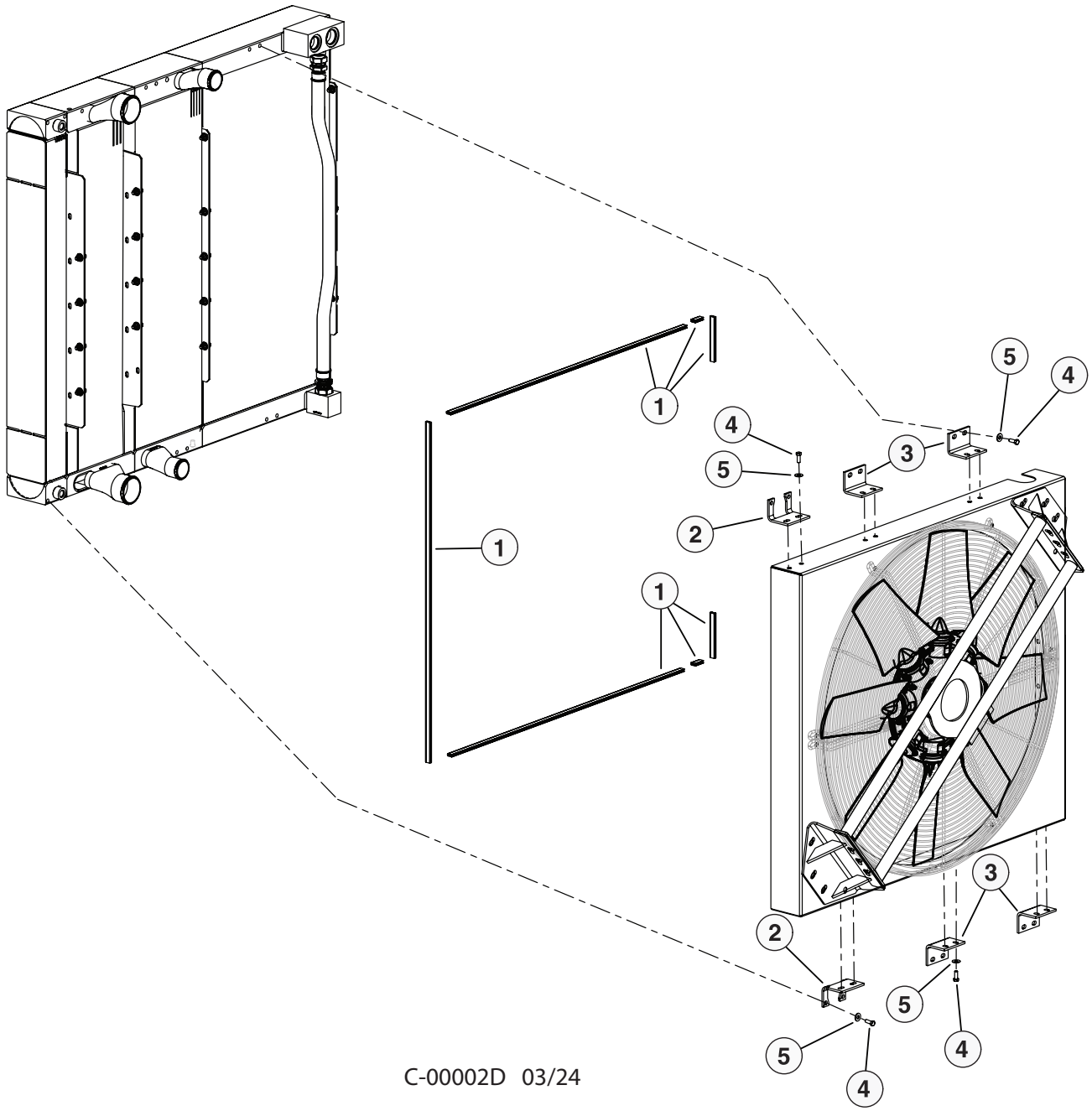


C-00002D 03/24

| Item | Part # | Description | Qty. |
|---|---|---|---|
| 1 | 8065.059.0000-3918.13 | Weatherstrip | 1 |
| 2 | 3918.013.0009-032519 | Bracket | 2 |
| 3 | 3562.074.0001-032519 | Bracket | 4 |
| 4 | 8050.058.0000-032519 | Bolt | 24 |
| 5 | 603784-032519 | Washer | 24 |

# C100-00003 - COOLER FAN SHROUD

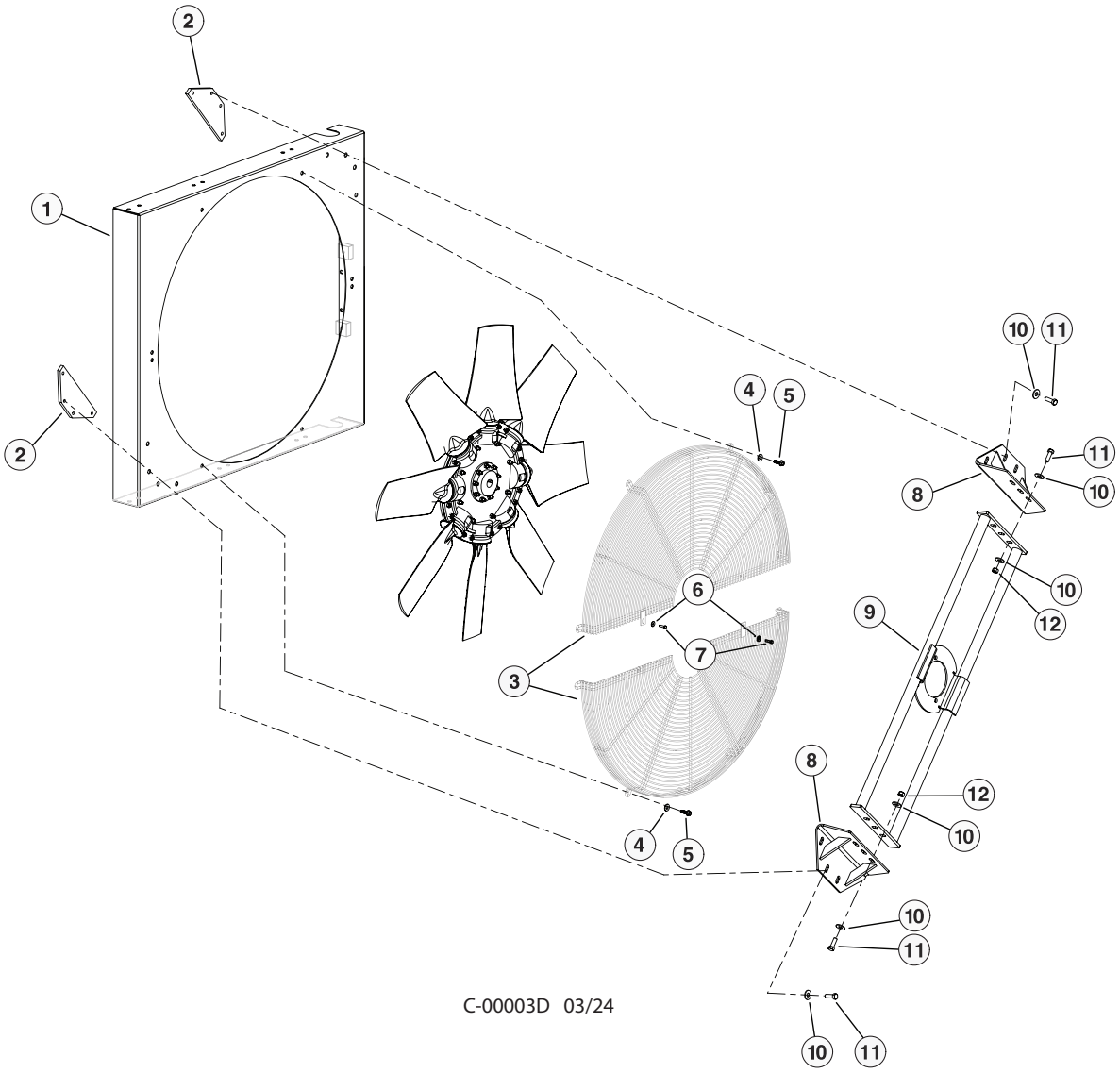


| Item | Part # | Description | Qty. |
|---|---|---|---|
| 1 | 3918.013.4010 | FAN SHROUD | 1 |
| 2 | 3918.013.4012-032519 | BRACKET | 2 |
| 3 | 3703.293.4030-032519 | GUARD | 1 |
| 4 | 603784-032519 | WASHER | 8 |
| 5 | 8050.059.0000-032519 | BOLT | 8 |
| 6 | 8054.019.0000-032519 | WASHER | 2 |
| 7 | 600050-032519 | BOLT | 2 |
| 8 | 3918.013.5002-032519 | BRACKET | 2 |
| 9 | 8049.062.0000-032519 | FAN MOTOR MOUNT | 1 |
| 10 | 601827-032519 | WASHER | 20 |
| 11 | 8050.066.0000-032519 | BOLT | 14 |
| 12 | 8049.062.0000-032519 | NUT | 6 |

# C100-00004 - RADIATOR/COOLER COMPONENTS

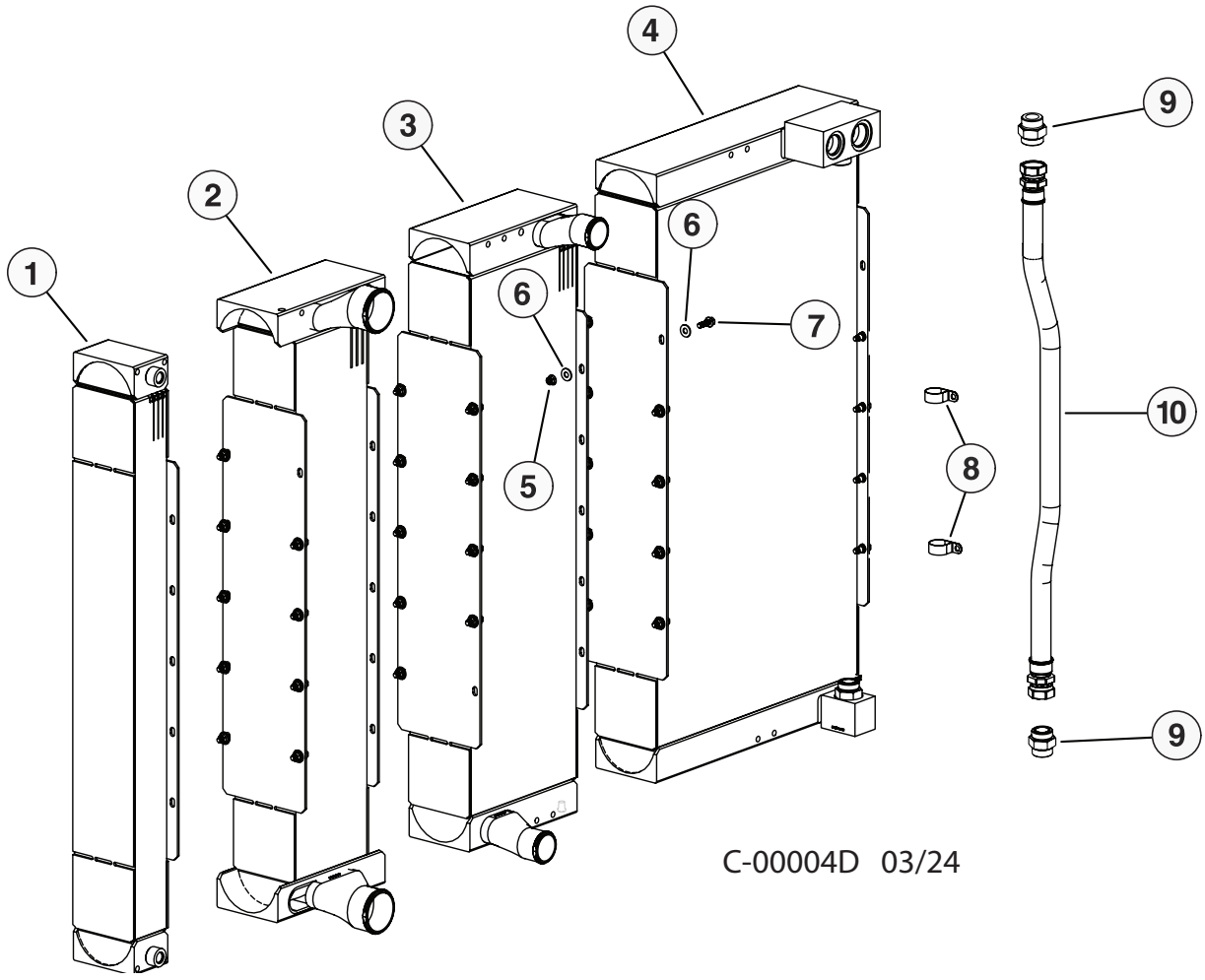


| Item | Part # | Description | Qty. |
|---|---|---|---|
| 1 | 3918.013.1700-032519 | AC CONDENSER COOLER | 1 |
| 2 | 3918.013.3000-032519 | CAC COOLER | 1 |
| 3 | 3918.013.2000-032519 | RADIATOR COOLER | 1 |
| 4 | 58168 | CORE, OIL COOLER - STAGE V UPDATED | 1 |
| 5 | 600862AX-032519 | NUT | 15 |
| 6 | 603784-032519 | WASHER | 30 |
| 7 | 8050.059.0000-032519 | BOLT | 15 |
| 8 | 8055.008.0000-032519 | CLAMP | 2 |
| 9 | 22448 | CONNECTOR, STR - 848-TTO-24X24 | 2 |
| 10 | 3918.013.0010-032519 | HOSE ASSEMBLY - 187TC30.5-24-24OS-24OS | 1 |

# C100-00010 - RADIATOR SURGE TANK INSTALLATION

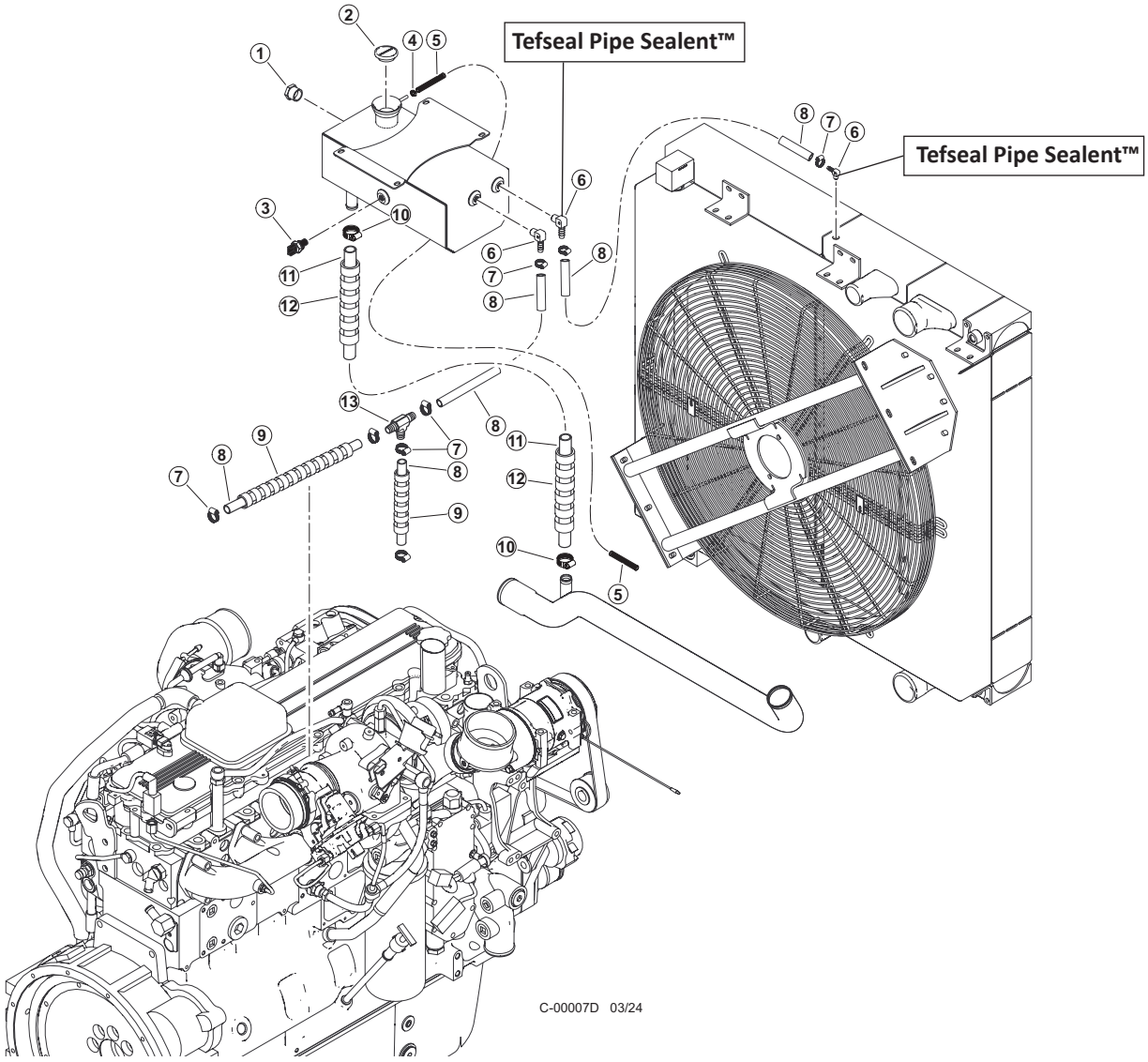


| Item | Part # | Description | Qty. |
|---|---|---|---|
| 1 | 24308 | SIGHT GLASS - HYDRAULIC TANK/TRIPLE BOX | 1 |
| 2 | 57893 | CAP, RADIATOR 15 # D-SERIES COOLER | 1 |
| 3 | 58117 | SENSOR, LOW COOLANT - STAGE 5 | 1 |
| 4 | 16202 | CLAMP, HOSE - WORM STYLE - .625" | 1 |
| 5 | 16238 | HOSE, FUEL LINE (BULK ROLL) - .3125” | 86” |
| 6 | 52586 | ELBOW, 90 MALE HOSE BARB 6-4 **TEFSEAL PIPE SEALANT™** | 3 |
| 7 | 16202 | CLAMP, HOSE - WORM STYLE - 3/8” | 6 |
| 8 | 55411 | HOSE, COOLENT - 3/8” | AR |
| 9 | 27846 | WRAP, SPIRAL HOSE - 3/8”I.D. .052” WALL | AR |
| 10 | 15629 | CLAMP, HOSE - WORM STYLE - 1.5" | 2 |
| 11 | 65835 - (65835 - KIT) | HOSE, HEATER, 803195716-0-0-SW **(RADIATOR BURP TANK)** | 1 |
| 12 | 19677 | PROTECTOR, HOSE - SPRIAL (1.25”)(BULK) | AR |
| 13 | 57902 | TEE, HOSE BARB - 3/8” | 1 |

# C100-00020 - COOLING UNIT RELATED PARTS

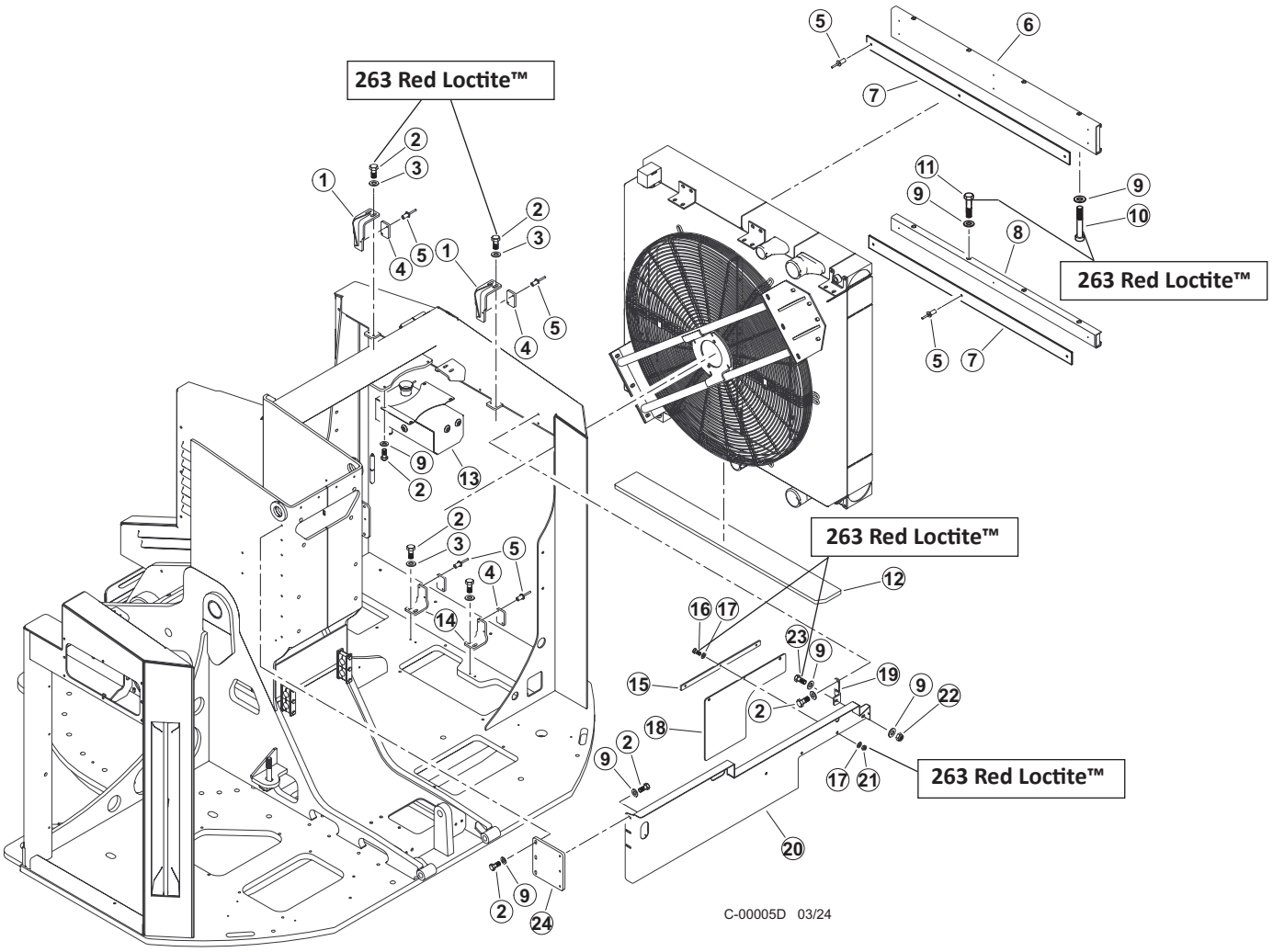


| Item | Part # | Description | Qty. |
|---|---|---|---|
| 1 | 60689 | WELDMENT, COOLER TOP CLAMP HOLD DOWN | 2 |
| 2 | 10402 | BOLT - .375" X 1.25" **263 RED LOCTITE™** | 20 |
| 3 | 10802 | WASHER, FLAT - .375" | 8 |
| 4 | 60106 | RUBBER, COOLER MOUNTING - D-SERIES | 4 |
| 5 | 41029 | 3/16" DIAMETER DOME HEAD RIVET | 14 |
| 6 | 60623 | WELDMENT, COOLER SILL - TOP | 1 |
| 7 | 61111 | RUBBER, COOLER FRONT - D SERIES | 2 |
| 8 | 60627 | WELDMENT, SILL COOLER - BOTTOM | 1 |
| 9 | 58217 | BOLT, ALLEN 3/8-16 X 7 COOLER SILL D TOP | 4 |
| 10 | 15528 | WASHER, SAE FLAT - .375" **263 RED LOCTITE™** | 22 |
| 11 | 10713 | BOLT - .375" X 3.5" **263 RED LOCTITE™** | 4 |
| 12 | 61247 | RUBBER, COOLER FRONT, 3/4" THICK | 1 |
| 13 | 60665 | TANK, SURGE | 1 |
| 14 | 60149 | PLATE, COOLER CLAMP HOLD DOWN | 2 |
| 15 | 60703 | BAR, MOUNT - ENGINE BARRIER | 1 |
| 16 | 18309 | BOLT - .25" X 1.25" **263 RED LOCTITE™** | 3 |
| 17 | 10800 | WASHER, FLAT - .25" | 6 |
| 18 | 58150 | BELTING, SCR SPRAY PROTECTOR | 1 |
| 19 | 60685 | BRACKET, BARRIER PANEL | 1 |
| 20 | 60443 | BARRIER, COOLER PANEL | 1 |
| 21 | 10811 | NUT, LOCK - .25" | 3 |
| 22 | 10813 | NUT, LOCK - .375" | 1 |
| 23 | 10402 | BOLT - .375" X 1.25" **263 RED LOCTITE™** | 1 |
| 24 | 60508 | PLATE, BARRIER PANEL MTG | 1 |

# C100-00030 - RADIATOR HOSES AND AIR TUBES

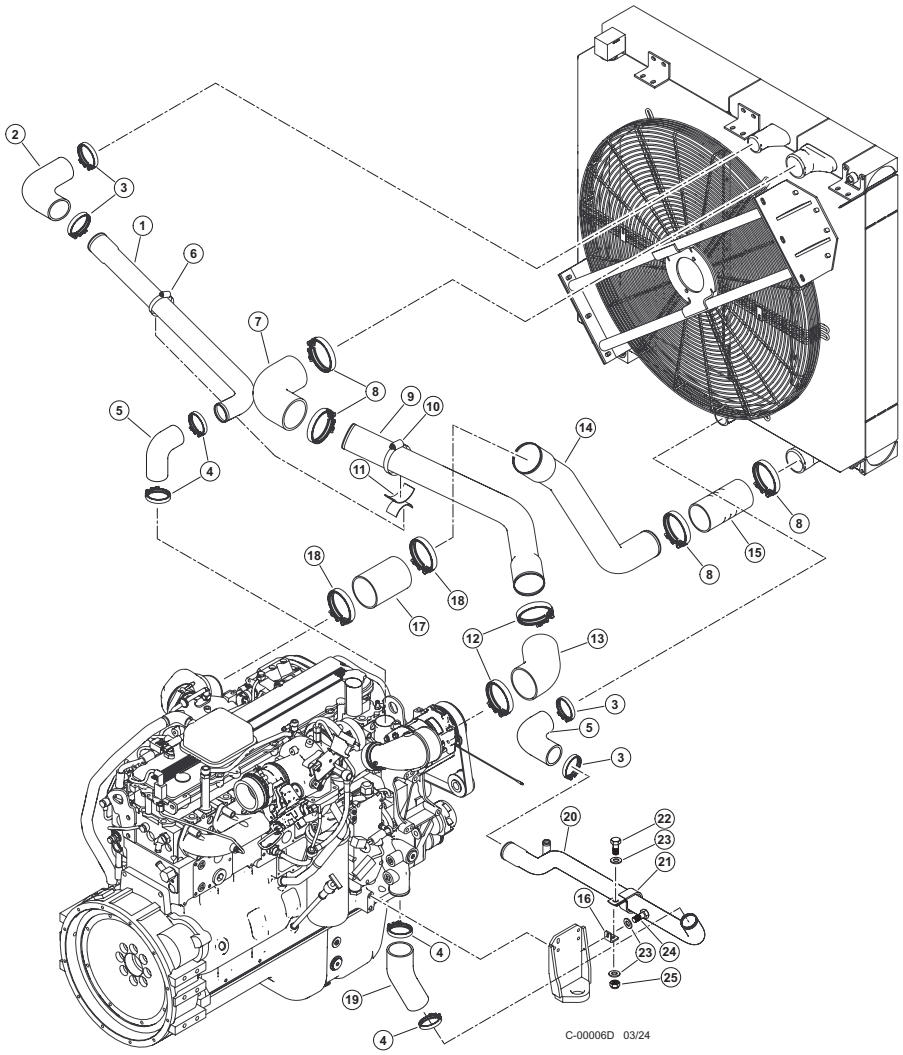


| Item | Part # | Description | Qty. |
|---|---|---|---|
| 1 | 48918 | TUBE, UPPER RADIATOR | 1 |
| 2 | 58167 | HOSE, RAD UPPER D-UPDATE 2 1/2” ID | 1 |
| 3 | 18103 | CLAMP, CONSTANT TORQUE - #40 | 4 |
| 4 | 18104 | CLAMP, CONSTANT TORQUE - #36 | 4 |
| 5 | 15617 | HOSE, 90 DEGREE RADIATOR - 2 1/4 ID | 2 |
| 6 | 54788 | CLAMP, STANDOFF - WATER/AIR TUBE | 1 |
| 7 | 52753 | ELBOW, 90 - 3.5” X 6” SILICONE C-SERIES | 1 |
| 8 | 52862 | CLAMP, HOSE - CUMMINS HUMP | 4 |
| 9 | 60440 | TUBE, UPPER CAC TO MANIFOLD | 1 |
| 10 | 15597 | CLAMP, HOSE - WORM STYLE - 4” | 1 |
| 11 | 46844 | STANDOFF, AIR TUBE/WATER TUBE | 1 |
| 12 | 15697 | CLAMP, STRAP BAND - 4.5” | 2 |
| 13 | 52729 | ELBOW, 48 - 4” BOOT(AIR TO AIR TIER 3 C) | 1 |
| 14 | 60436 | TUBE, LOWER CAC TO MANIFOLD | 1 |
| 15 | 52861 | HOSE, HUMP - SILICONE (3 WIRE CUMMINS) | 1 |
| 16 | 46421 | BRACKET, COOLER LINE SUPPORT | 1 |
| 17 | 55646 | HOSE, AIR TO AIR - CUMMINS - 4” X 4” STR | 1 |
| 18 | 15697 | CLAMP, STRAP BAND - 4.5” | 2 |
| 19 | 57992 | HOSE, RADIATOR - D-SERIES | 1 |
| 20 | 61246 | TUBE, LOWER RAD D-SERIES W/ TUBE FLARE | 1 |
| 21 | 59103 | P-CLIP, CUSHIONED, 2.25” ID | 1 |
| 22 | 15576 | BOLT - .25” X 1” | 1 |
| 23 | 10757 | WASHER, SAE FLAT - .25” | 3 |
| 24 | 18309 | BOLT - .25” X 1.25” | 1 |
| 25 | 10811 | NUT, LOCK - .25” | 1 |

# FUEL SYSTEM AND RELATED PARTS - (D)

# D100-0000 - FUEL TANK COMPONENTS - LEVELING

**NOTE: APPLY GREASE TO O-RINGS**

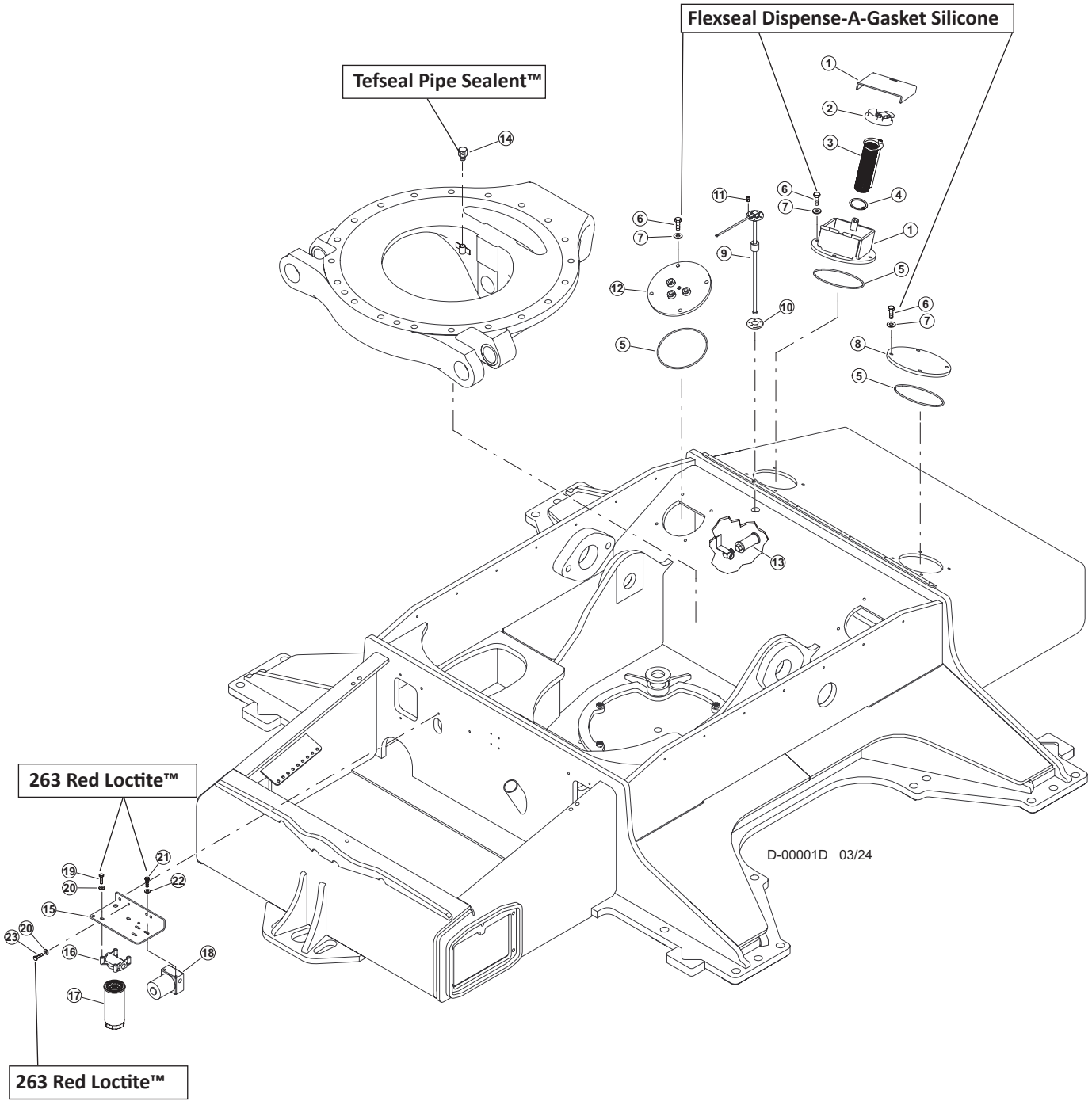

# D100-00000 - FUEL TANK COMPONENTS - LEVELING

| Item | Part # | Description | Qty. |
|---|---|---|---|
| 1 | 47605 | COVER, LOCKING FUEL TANK | 1 |
| 2 | 16585 | CAP, FUEL | 1 |
| 3 | 17114 | STRAINER, FUEL SYSTEM | 1 |
| 4 | 17115 | RING, SNAP - FUEL STRAINER RETAINER | 1 |
| 5 | 15600 | O-RING - 8” DIA. -369 | 4 |
| 6 | 50100 | BOLT - .5” X 1.25” **FLEXSEAL DISPENSE-A-GASKET SILICONE** | 16 |
| 7 | 15534 | WASHER, SAE FLAT - .5” | 16 |
| 8 | 12250 | COVER, ACCESS FUEL TANK | 4 |
| 9 | 57220 | SENDER, FUEL LEVEL W/FLOAT (TL TRACK ) | 1 |
| 10 | SEE DESCRIPTION | GASKET, FUEL SENDER **(CALL)** | 1 |
| 11 | 22862 | SCREW, MACHINE - #10-24 X .5” (BUTTON) | 4 |
| 12 | 53203 | COVER, ACCESS FUEL TANK W/FITTINGS | 1 |
| 13 | 17271 | FILTER, SCREEN - FUEL SYSTEM | 1 |
| 14 | 54170 | VENT, FUEL TANK - TRACK **TEFSEAL PIPE SEALANT™** | 1 |
| 15 | 53197 | MOUNT, FUEL COMPONENTS - LEV T/M | 1 |
| 16 | 16574 | MOUNT, FILTER HEAD ASSEMBLY | 1 |
| 17 | 51751 | FILTER, FUEL - SPIN-ON FUEL | 1 |
| 18 | 57784 | PUMP, FUEL - AIR DOG | 1 |
| 19 | 11707 | BOLT - .375” X 1” **263 RED LOCTITE™** | 2 |
| 20 | 10802 | WASHER, FLAT - .375” | 4 |
| 21 | 15605 | BOLT - .3125” X .75” **263 RED LOCTITE™** | 2 |
| 22 | 10801 | WASHER, FLAT - .3125” | 2 |
| 23 | 15542 | BOLT - .375” X .75” **263 RED LOCTITE™** | 2 |

# D100-00010 - FUEL HOSE KIT - UPPER

**NOTE: HYDRAULIC FITTINGS GET 545 LOCTITE™**

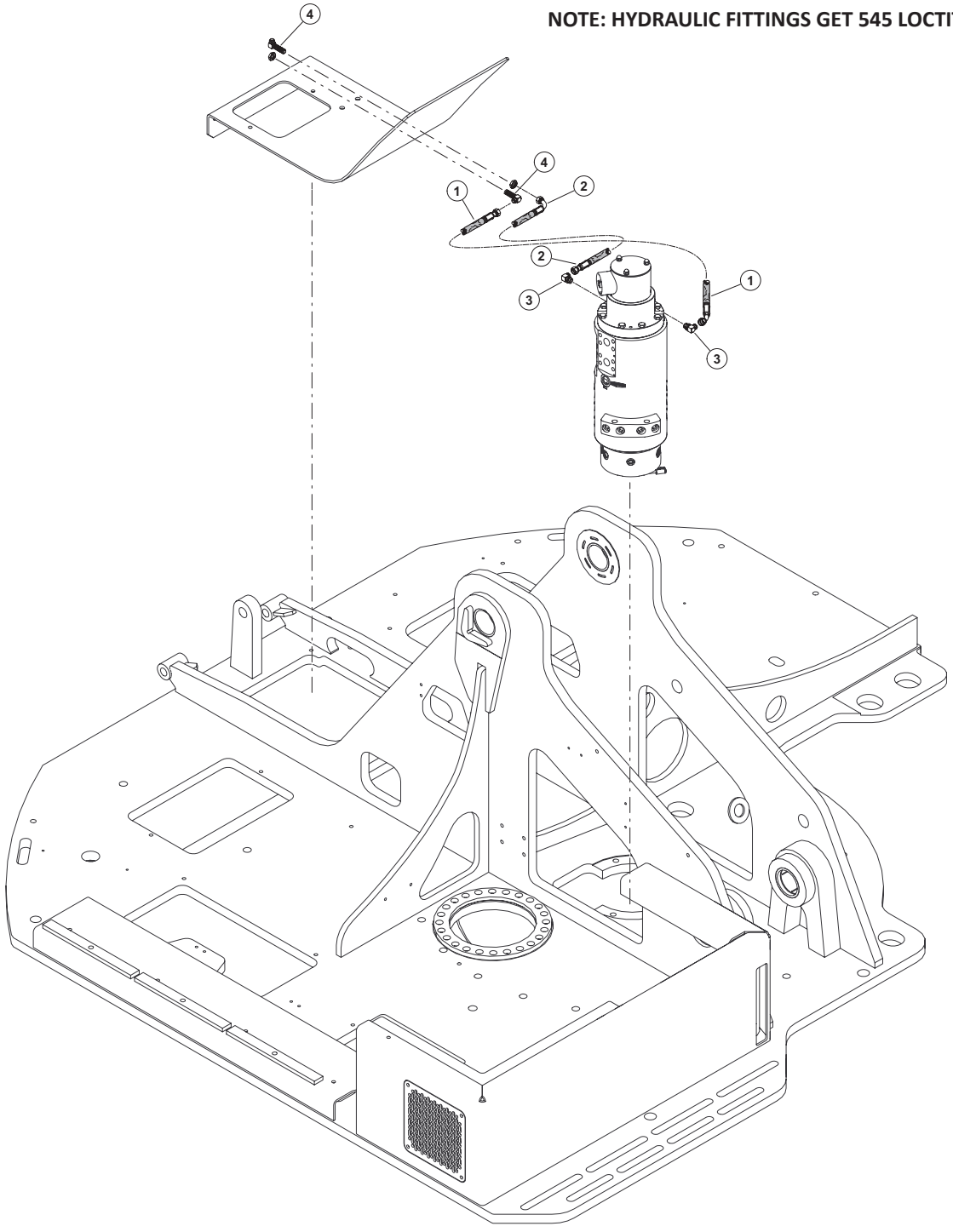


D-00002D 03/24

| Item | Part # | Description | Qty. |
|---|---|---|---|
| 1 | 65797 - (65792 - KIT) | HOSE, HYD, 221FR81 06-06FJ-06FJ4-W - **(FUEL SUPPLY TO RM)** | 1 |
| 2 | 65798 - (65792 - KIT) | HOSE, HYD, 221FR81 06-06FJ-06F9-W - **(FUEL RETURN TO RM)** | 1 |
| 3 | 15480 | ELBOW, 90 - 6801-6 | 2 |
| 4 | 55347 | FITTING, ELBOW - BULKHEAD 6 WETX-WLN-S | 2 |

# D100-00020 - FUEL TANK COMPONENTS - NON-LEVELING

**NOTE: APPLY GREASE TO O-RINGS**

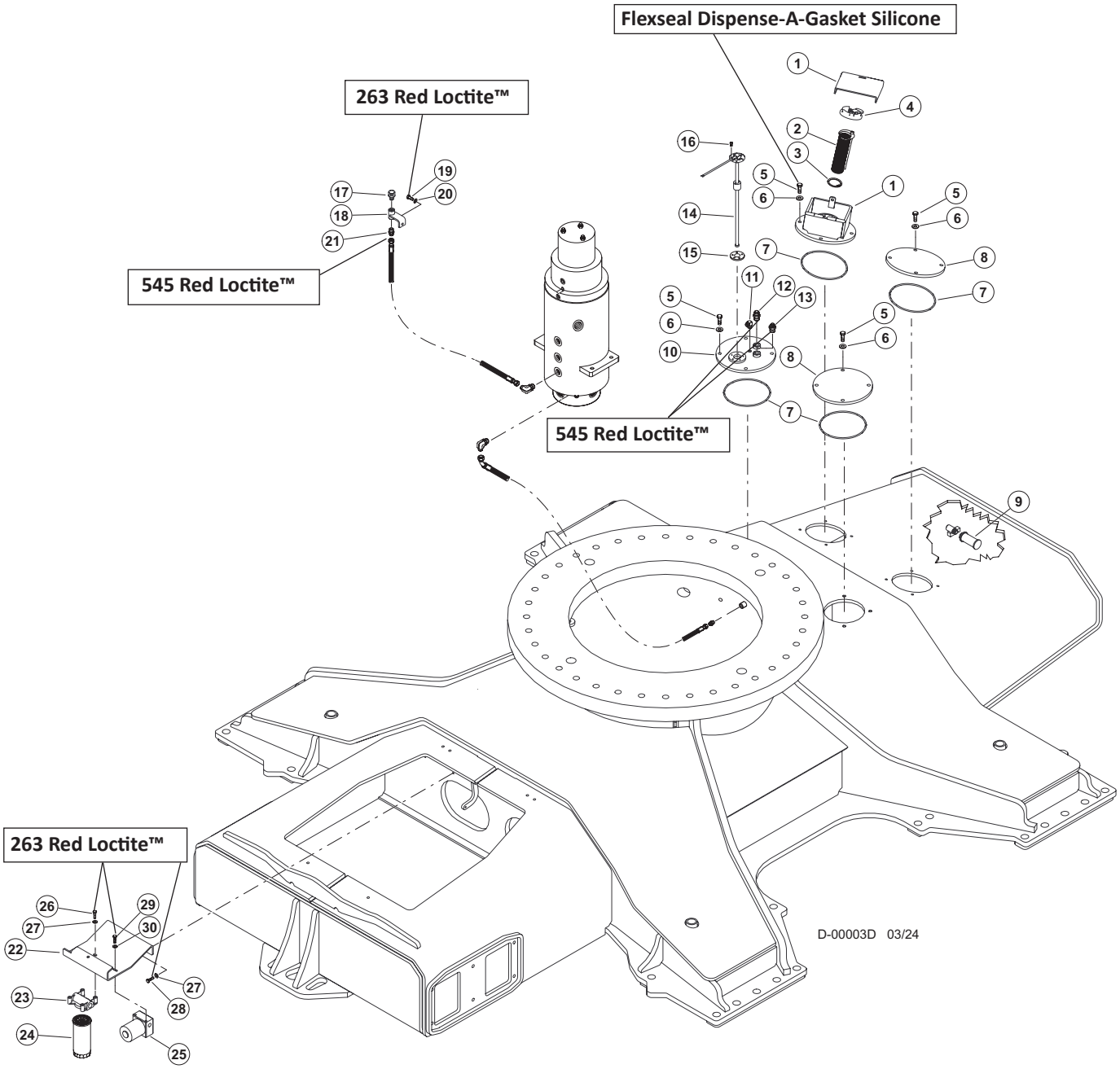

# D100-00020 - FUEL TANK COMPONENTS - NON-LEVELING

| Item | Part # | Description | Qty. |
|---|---|---|---|
| 1 | 47605 | COVER, LOCKING FUEL TANK | 1 |
| 2 | 17114 | STRAINER, FUEL SYSTEM | 1 |
| 3 | 17115 | RING, SNAP - FUEL STRAINER RETAINER | 1 |
| 4 | 16585 | CAP, FUEL | 1 |
| 5 | 50100 | BOLT - .5” X 1.25” **(FLEXSEAL DISPENSE-A-GASKET SILICONE)** | 16 |
| 6 | 15534 | WASHER, SAE FLAT - .5” | 16 |
| 7 | 15600 | O-RING - 8” DIA. -369 | 4 |
| 8 | 12250 | COVER, ACCESS FUEL TANK | 4 |
| 9 | 17271 | FILTER, SCREEN - FUEL SYSTEM | 1 |
| 10 | 47233 | WELDMENT, ACCESS COVER W/SENDER | 1 |
| 11 | 15505 | ELBOW, 90 4-4 CLO-S **5 545 RED LOCTITE™** | 1 |
| 12 | 15489 | CONNECTOR, STR - 6400-8-8 **545 RED LOCTITE™** | 1 |
| 13 | 53103 | FITTING, 6-8 - ORB-JIC 830-B **545 RED LOCTITE™** | 1 |
| 14 | 57219 | SENDER, FUEL LEVEL W/FLOAT (NL TRACK) | 1 |
| 15 | SEE DESCRIPTION | GASKET, FUEL SENDER **(CALL)** | 1 |
| 16 | 22862 | SCREW, MACHINE - #10-24 X .5” (BUTTON) | 4 |
| 17 | 54170 | VENT, FUEL TANK - TRACK | 1 |
| 18 | 46415 | BRACKET, FUEL VENT NON-LEVEL MACH | 1 |
| 19 | 15604 | BOLT - .25” X .75” | 1 |
| 20 | 10757 | WASHER, SAE FLAT - .25” | 1 |
| 21 | 15131 | CONNECTOR, STR - FF2031T-0404S **545 RED LOCTITE™** | 1 |
| 22 | 65316 | MOUNT, FUEL COMPONENTS - LEV T/M | 1 |
| 23 | 16574 | MOUNT, FILTER HEAD ASSEMBLY | 1 |
| 24 | 51751 | FILTER, FUEL - SPIN-ON FUEL | 1 |
| 25 | 57784 | PUMP, FUEL - AIR DOG | 1 |
| 26 | 15542 | BOLT - .375” X .75” **263 RED LOCTITE™** | 2 |
| 27 | 10802 | WASHER, FLAT - .375” | 4 |
| 28 | 11707 | BOLT - .375” X 1” **263 RED LOCTITE™** | 2 |
| 29 | 15605 | BOLT - .3125” X .75” **263 RED LOCTITE™** | 2 |
| 30 | 10801 | WASHER, FLAT - .3125” | 2 |

# D100-00030 - DEF *TANK* COMPONENTS & COVERS

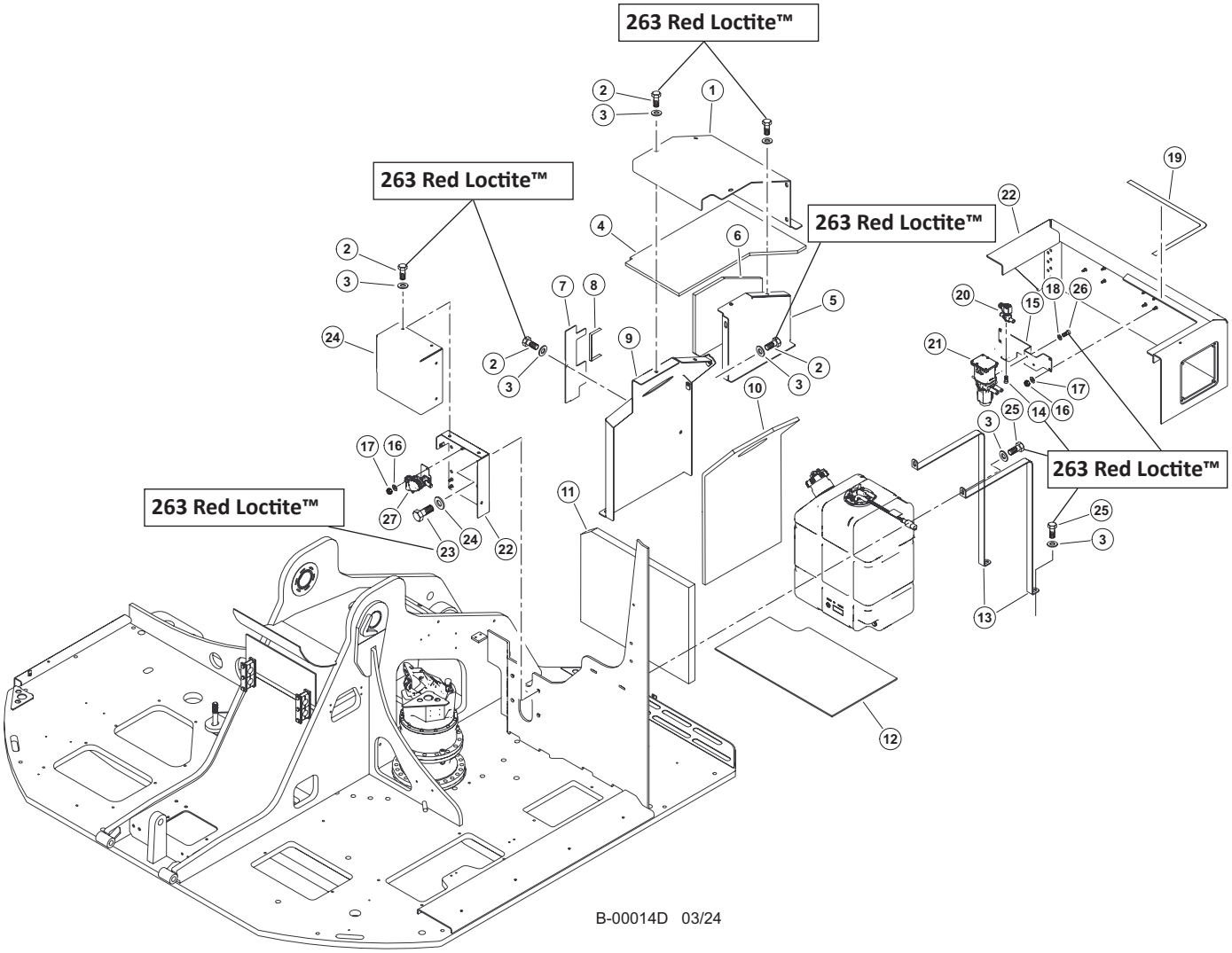

# D100-00030 - DEF TANK COMPONENTS & COVERS

| Item | Part # | Description | Qty. |
|---|---|---|---|
| 1 | 60655 | PLATE, DEF TANK SHROUD | 1 |
| 2 | 15542 | BOLT - .375” X .75” **263 RED LOCTITE™** | 14 |
| 3 | 15534 | WASHER, SAE FLAT - .5” | 14 |
| 4 | 58034 | INSULATION, DEF TANK TOP COVER | 1 |
| 5 | 60657 | SHROUD, DEF TANK - END COVER | 1 |
| 6 | 58033 | INSULATION, DEF TANK END COVER | 1 |
| 7 | 60514 | COVER, DEF SURROUND | 1 |
| 8 | 24925 | CHANNEL, EDGE PROTECTOR - 3/16”BULB(STR) | 10” |
| 9 | 60660 | SHROUD, DEF TANK - END | 1 |
| 10 | 58035 | INSULATION, DEF TANK FILL PANEL | 1 |
| 11 | 58036 | INSULATION, UPPER TO DEF TANK | 1 |
| 12 | 58037 | FLOORMAT, DEF TANK D-MOD | 1 |
| 13 | 47942 | STRAP, DEF TANK - CUMMINS | 2 |
| 14 | 87485 | SOCKET HEAD CAP SCREW - 12.9 M5-0.8 X 14MM **263 RED LOCTITE™** | 2 |
| 15 | 60134 | PLATE, DEF DOSER MOUNT - STAGE V | 1 |
| 16 | 10811 | NUT, LOCK - .25” | 6 |
| 17 | 10800 | WASHER, FLAT - .25” | 6 |
| 18 | 15559 | WASHER, SAE FLAT - .3125” | 2 |
| 19 | 18126 | WEATHERSTRIPPING, RUBBER-DOOR SEAL | 3’ |
| 20 | 60412 | SCR WATER VALVE | 1 |
| 21 | 58431 | PUMP, DOSER - CUMMINS STAGE V | 1 |
| 22 | 654890 | PLATE, DRIER AND CAB VALVE COVER | 1 |
| 23 | 10783 | BOLT - .5” X 1” **263 RED LOCTITE™** | 4 |
| 24 | 65487 | WELDMENT, DRIER AND CAB VALVE MOUNT | 1 |
| 25 | 10402 | BOLT - .375” X 1.25” **263 RED LOCTITE™** | 2 |
| 26 | 80511 | BOLT - M8 X 20 | 2 |
| 27 | 51714 | VALVE, BALL - WATER SHUT OFF HEATER 1/2” | 1 |

# ELECTRICIAL SYSTEM - (E)

## E100-00000 - BATTERY INSTALLATION

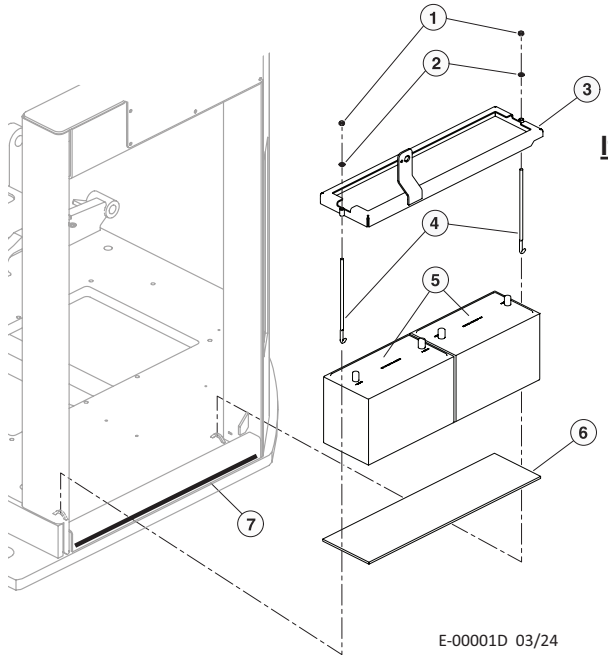


| Item | Part # | Description | Qty. |
|---|---|---|---|
| 1 | 10788 | NUT, NYLOCK - .3125” | 2 |
| 2 | 15559 | WASHER, SAE FLAT - .3125” | 2 |
| 3 | 45537 | BRACKET, BATTERY HOLD DOWN | 1 |
| 4 | 51722 | HOLD DOWN, BATTERY | 2 |
| 5 | 17150 | BATTERY, HEAVY DUTY | 2 |
| 6 | 45720 | RUBBER, ISOLATOR - BATTERY HOLD DOWN | 1 |
| 7 | 52552 | EDGE GUARD - (BULK ROLL) | 2’ |

## E100-00010 - ELECTRICIAL HARNESS - (IQAN SYSTEM)

**ADD DIELECTRIC SILICONE GREASE TO ELECTRICIAL CONNECTORS**

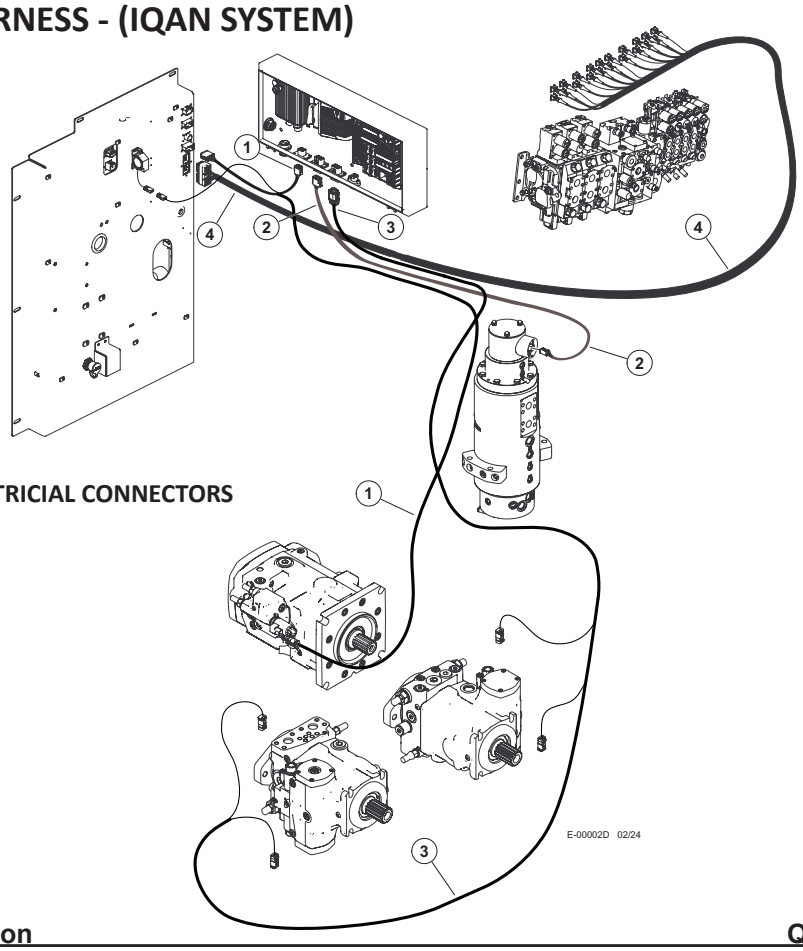


| Item | Part # | Description | Qty. |
|---|---|---|---|
| 1 | 54527 | HARNESS, XA2 PAN TO CAB - TIER4 | 1 |
| 2 | 54843 | HARNESS, ROTARY MAN - TRACK- TIER4 | 1 |
| 3 | 54528 | HARNESS, HYDROSTATIC PUMP - TIER4 | 1 |
| 4 | 58071 | HARNESS, CONTROL VALVE - D-SERIES | 1 |

# E-2227300 - IQAN LOAD CENTER COMPONENTS S/N: UP TO 1237

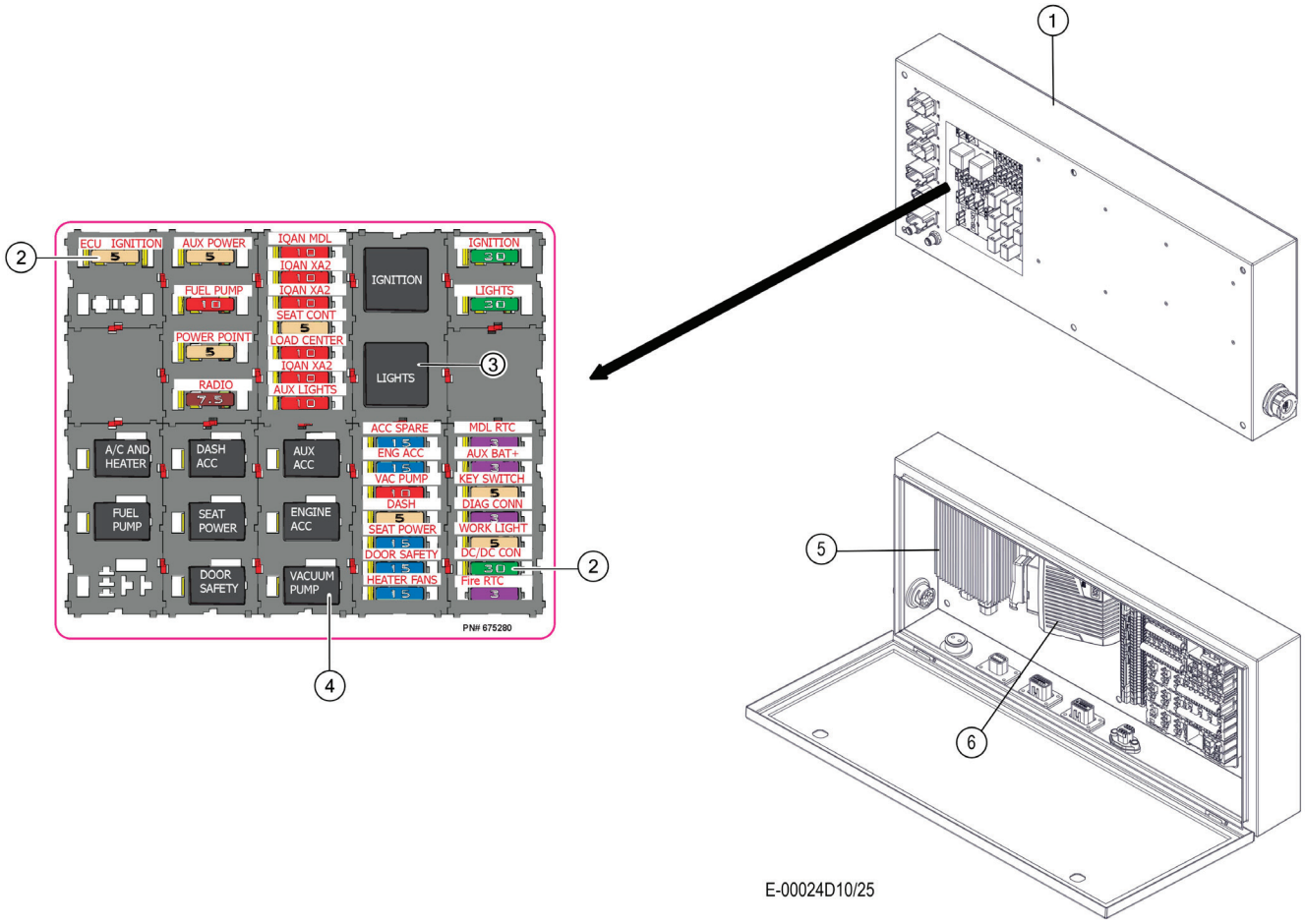


| Item | Part # | Description | Qty. |
|---|---|---|---|
| 1 | (See Description) | LOAD CENTER (SUPPLIER PART # GS17253100) | 1 |
| 2 | 24533 | FUSE, ATO - 5 AMP (SPADE STYLE) | 6 |
| | 24511 | FUSE, ATO - 3 AMP (SPADE STYLE) | 3 |
| | 50401 | FUSE, ATO - 30 AMP (SPADE STYLE) | 3 |
| | 24534 | FUSE, ATO - 7.5 AMP (SPADE STYLE) | 1 |
| | 24512 | FUSE, ATO - 10 AMP (SPADE STYLE) | 8 |
| | 50400 | FUSE, ATO - 15 AMP (SPADE STYLE) | 5 |
| 3 | 24323 | RELAY, 24-VOLT (MAIN ELEC 30 AMP) | 2 |
| 4 | 53645 | RELAY, ZETTLER AZ988-1C-24DE-C1 | 8 |
| 5 | 55483 | CONVERTER, 24V TO 12V | 1 |
| 6 | 53095 | MODULE, XA2 - IQAN | 1 |

# E-2227300 - IQAN LOAD CENTER XC43 COMPONENTS S/N: 1238 & FORWARD

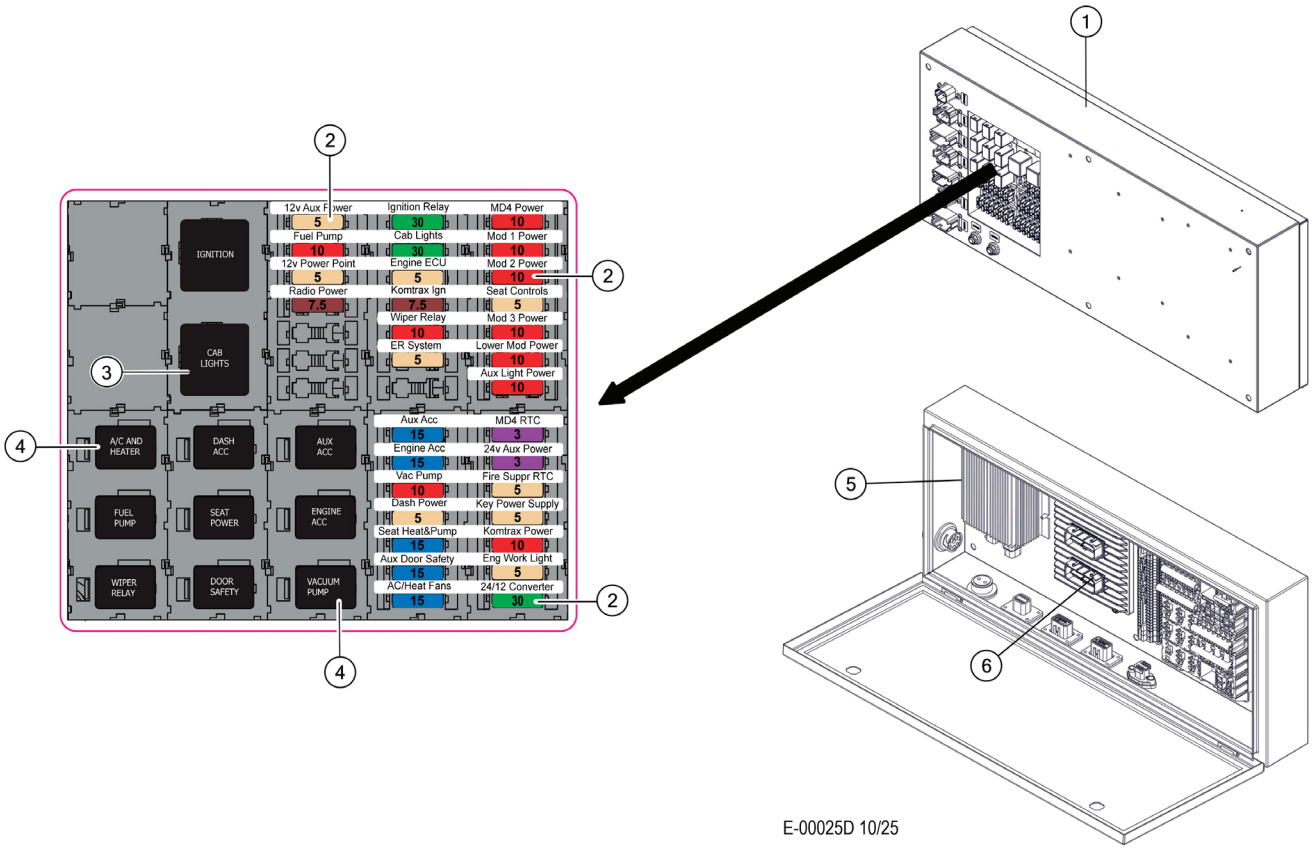


| Item | Part # | Description | Qty. |
|---|---|---|---|
| 1 | 669520 | LOAD CENTER, E-MODEL MACHINE | 1 |
| 2 | 24533 | FUSE, ATO - 5 AMP (SPADE STYLE) | 9 |
| | 24511 | FUSE, ATO - 3 AMP (SPADE STYLE) | 2 |
| | 50401 | FUSE, ATO - 30 AMP (SPADE STYLE) | 3 |
| | 24534 | FUSE, ATO - 7.5 AMP (SPADE STYLE) | 2 |
| | 24512 | FUSE, ATO - 10 AMP (SPADE STYLE) | 10 |
| | 50400 | FUSE, ATO - 15 AMP (SPADE STYLE) | 5 |
| 3 | 24323 | RELAY, 24-VOLT (MAIN ELEC 30 AMP) | 2 |
| 4 | 53645 | RELAY, ZETTLER AZ988-1C-24DE-C1 | 9 |
| 5 | 55483 | CONVERTER, 24V TO 12V | 1 |
| 6 | 669510 | MODULE, EXPANSION - IQAN XC43 | 1 |

# E100-00020 - ELECTRICIAL HARNESS - (IQAN SYSTEM) (HYD. TANK SENSORS, FAN MOTOR & CHARGE SYSTEM)

**ADD DIELECTRIC SILICONE GREASE TO ELECTRICIAL CONNECTORS**

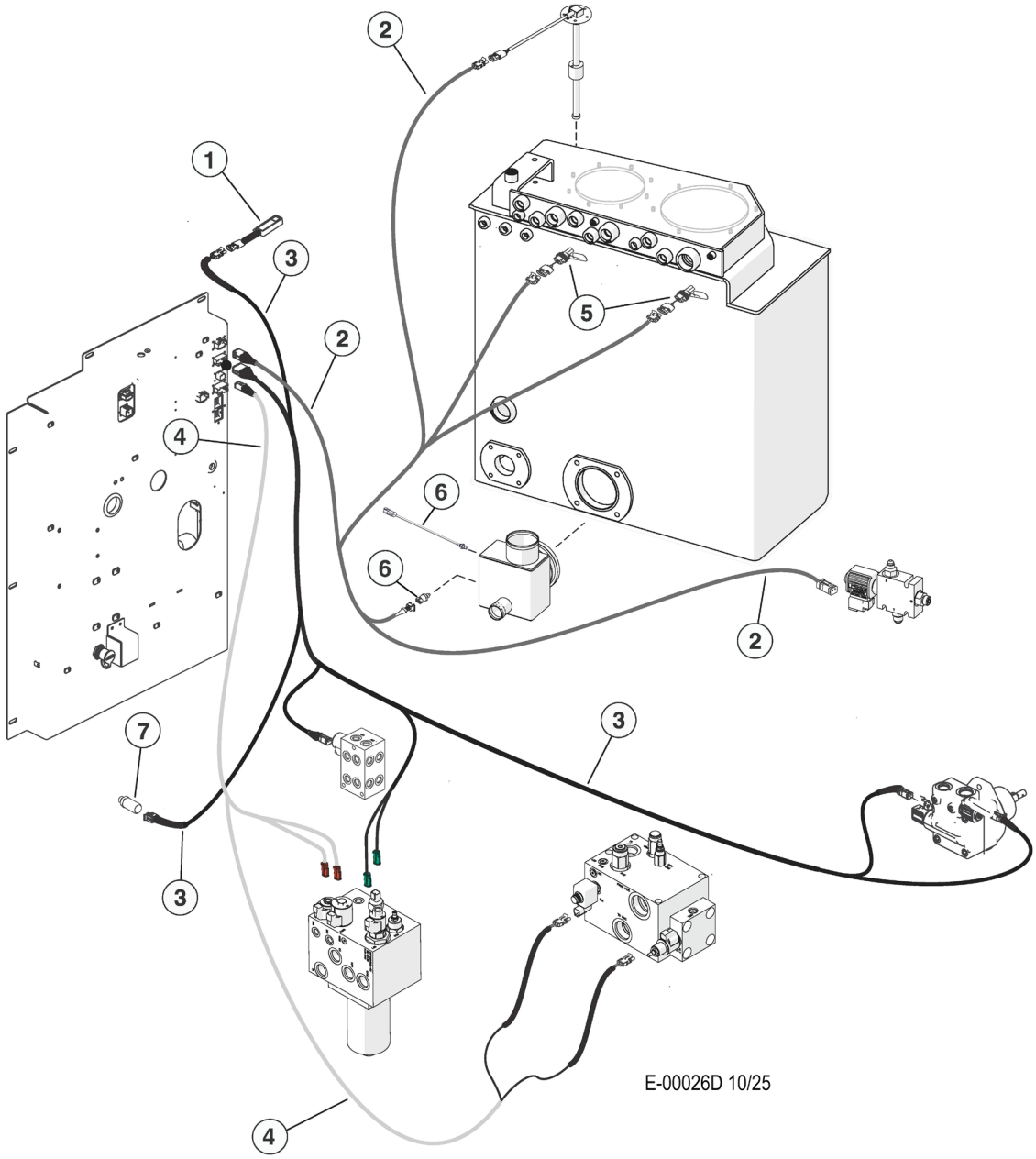


| Item | Part # | Description | Qty. |
|---|---|---|---|
| 1 | 55264 | SWITCH, LIMIT - DOOR/GULLWING (MAGNETIC) | 1 |
| 2 | 60395 | HARNESS, HYDRAULIC TANK SENSOR - D-SERIE | 1 |
| 2 | 66601 | HARNESS, HYDRAULIC TANK SENSORS 700E | 1 |
| 3 | 57917 | HARNESS, CHARGE-FAN - D MODEL | 1 |
| 4 | 57918 | HARNESS, TR MS PB DISC CABLE D-SERIES | 1 |
| 4 | 66603 | HARNESS, TRACK, MS, PB DISC CABLE 700E | 1 |
| 5 | 58307 | SWITCH, PRESSURE | 2 |
| 6 | 24531 | TRANSDUCER, HYD TEMP. **S/N: UP TO 1237** | 1 |
| 6 | 669530 | SENSOR, TEMP - SAE #6 W/DEUTSCH SS. **S/N: 1238 & FORWARD** | 1 |
| 7 | 24532 | TRANSDUCER, DISC SAW PRESSURE | 1 |

# E100-00030 - ELECTRICIAL HARNESS - (LOAD CENTER POWER)

**ADD DIELECTRIC SILICONE GREASE TO ELECTRICIAL CONNECTORS**

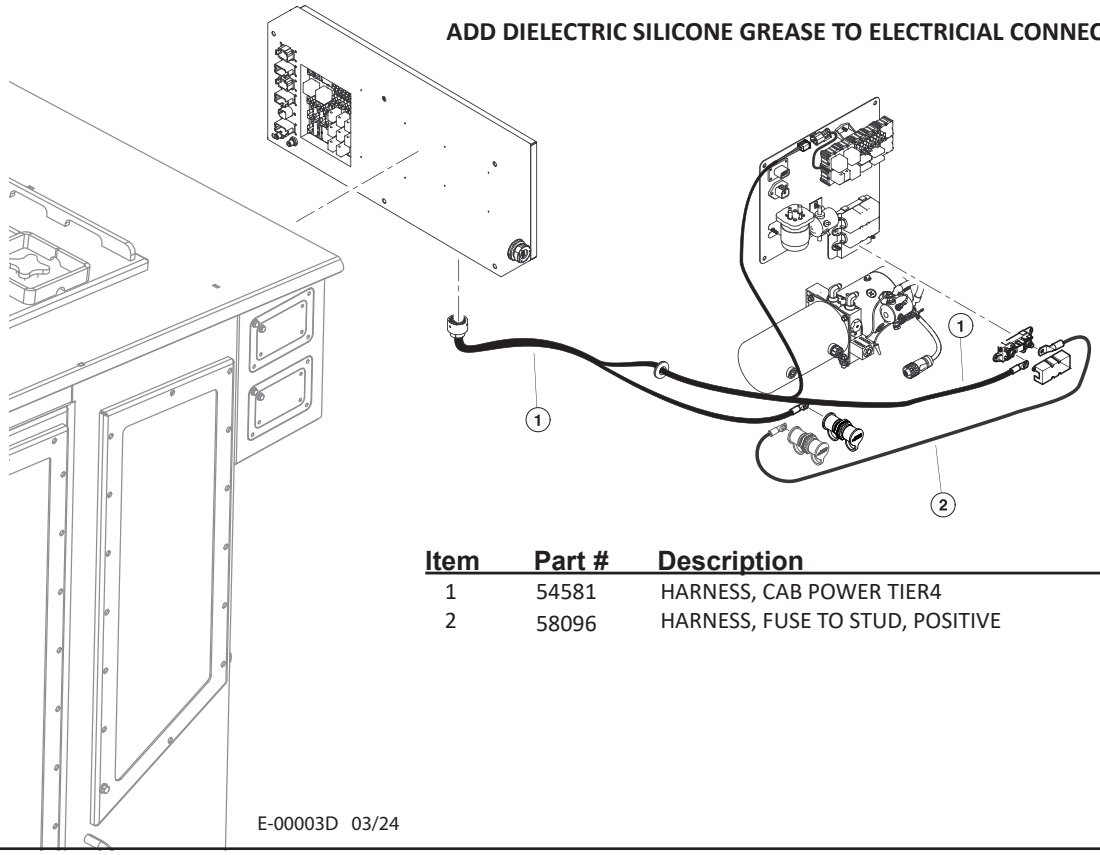


| Item | Part # | Description | Qty. |
|---|---|---|---|
| 1 | 54581 | HARNESS, CAB POWER TIER4 | 1 |
| 2 | 58096 | HARNESS, FUSE TO STUD, POSITIVE | 1 |

E-00003D 03/24

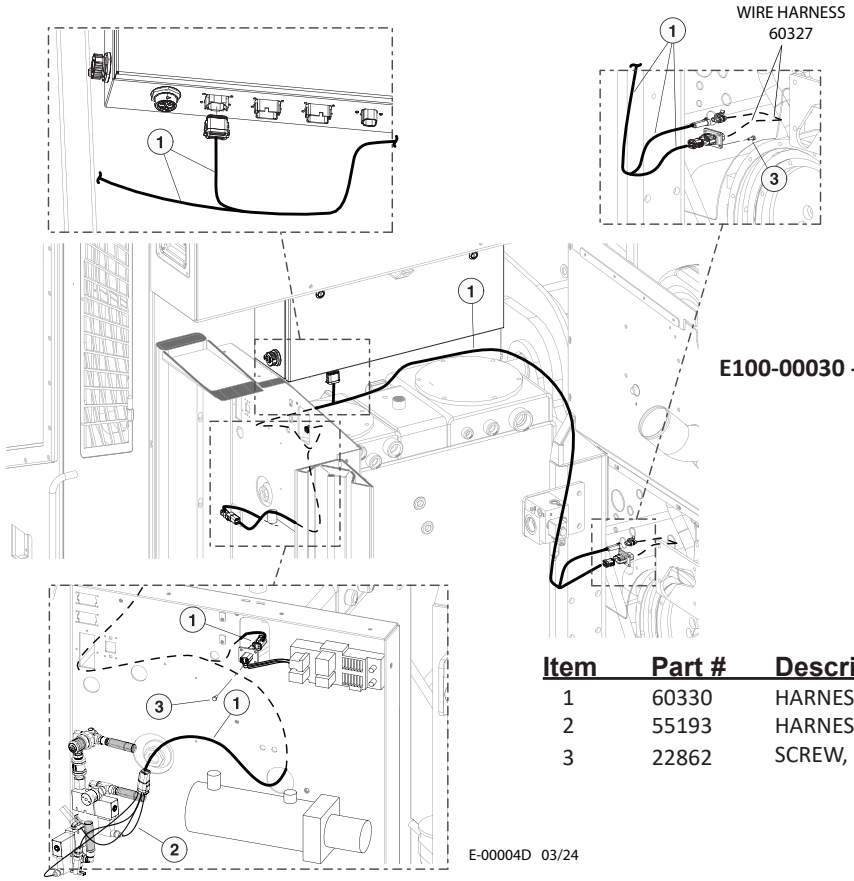


**E100-00030 - ELECTRICIAL HARNESS - (CAB TO ENGINE)**

| Item | Part # | Description | Qty. |
|---|---|---|---|
| 1 | 60330 | HARNESS, CAB TO ENGINE - CUMMINS STG5 | 1 |
| 2 | 55193 | HARNESS, VAC VENT FILL | 1 |
| 3 | 22862 | SCREW, MACHINE - #10-24 X .5” (BUTTON) | 8 |

E-00004D 03/24

# E100-00050 - ELECTRICIAL HARNESS - (FRONT DOOR)

**ADD DIELECTRIC SILICONE GREASE TO ELECTRICIAL CONNECTORS**

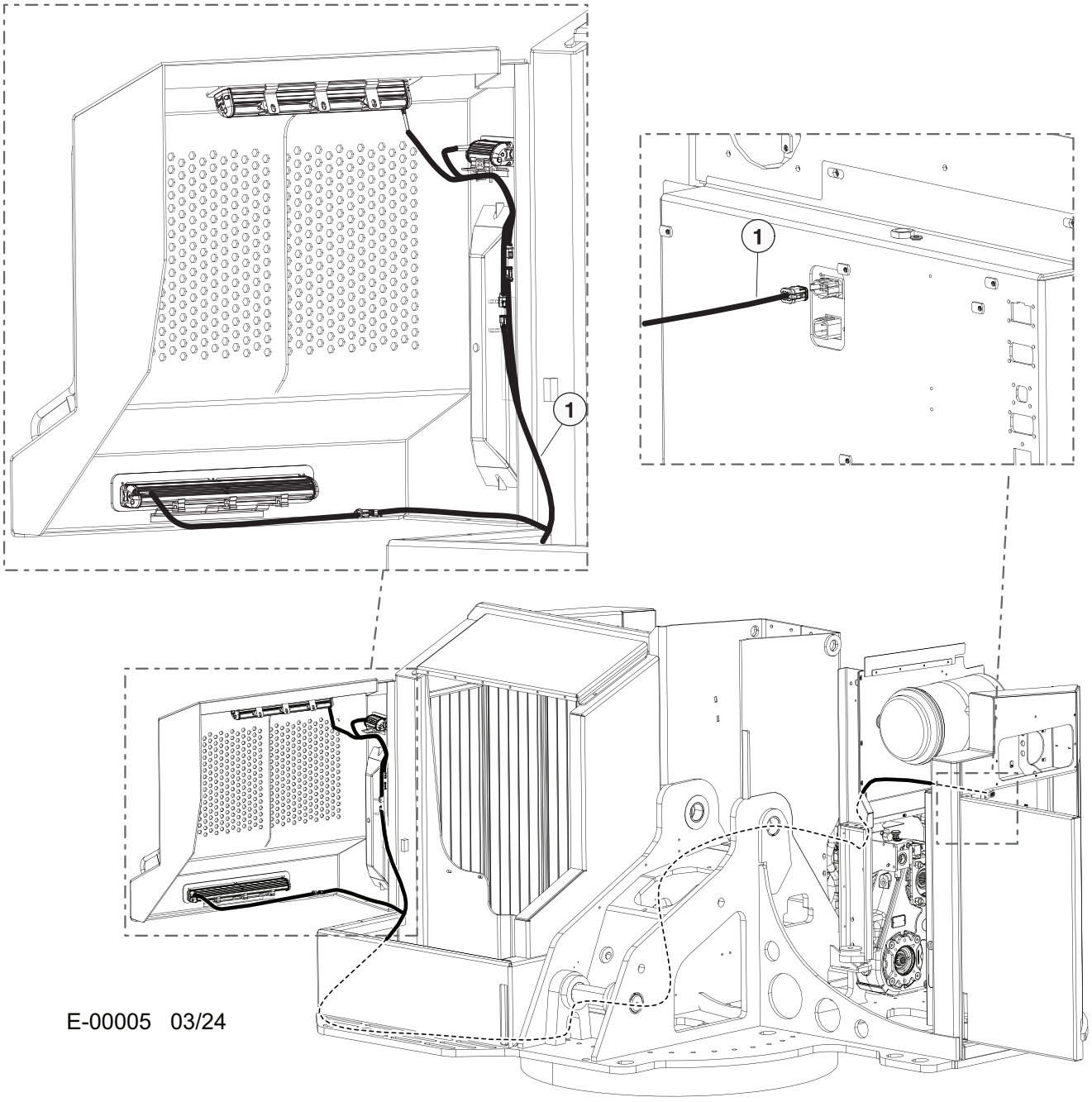


| Item | Part # | Description | Qty. |
|---|---|---|---|
| 1 | 54542 | HARNESS, LIGHTS-FRONT DOOR - TIER 4 | 1 |

# E100-00060 - ELECTRICIAL HARNESS ACCESSORIES

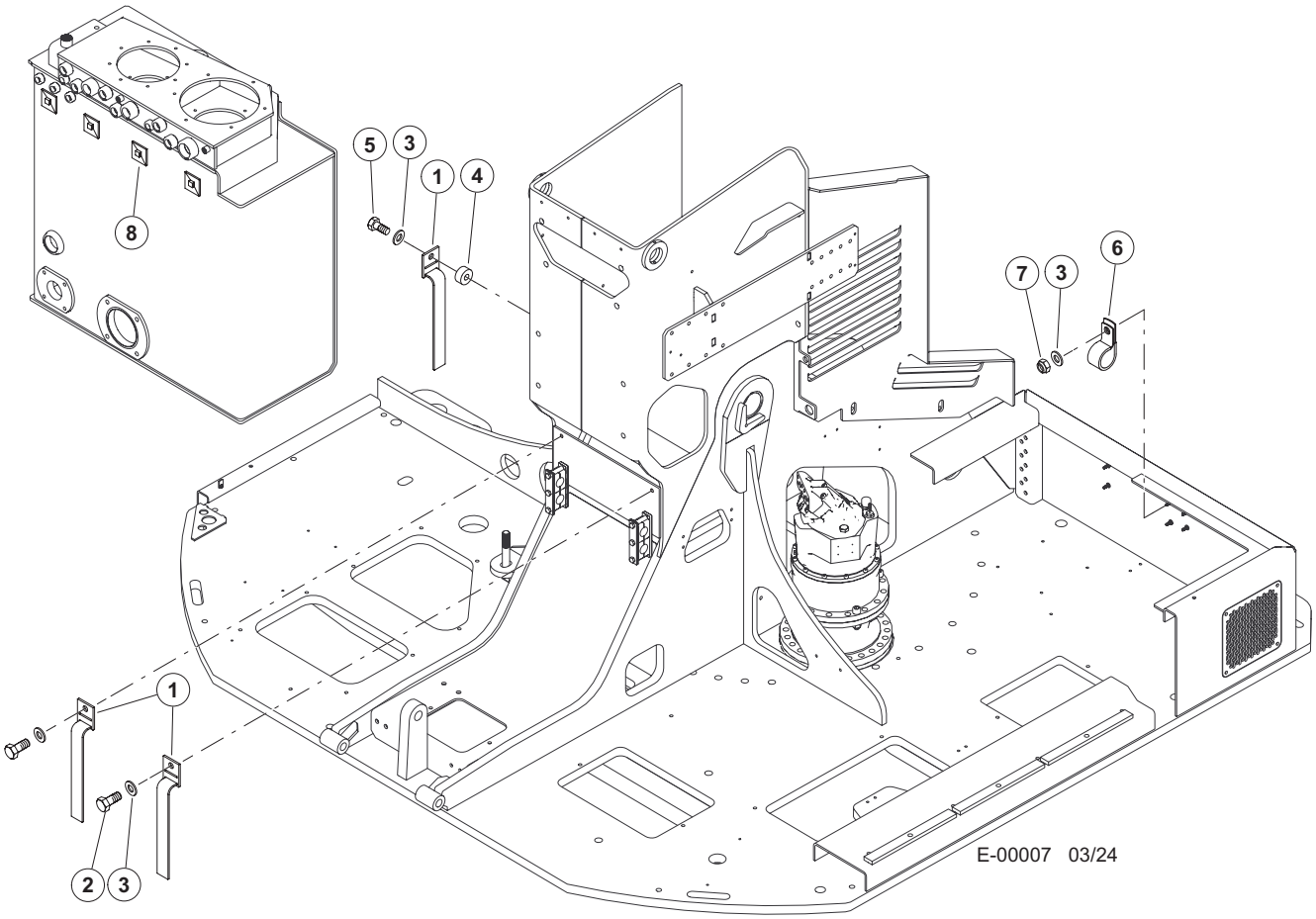


| Item | Part # | Description | Qty. |
|---|---|---|---|
| 1 | 57878 | STRAP, HANGING W/ BUCKLE | 3 |
| 2 | 15576 | BOLT - .25” X 1” | 2 |
| 3 | 10757 | WASHER, SAE FLAT - .25” | 4 |
| 4 | 19219 | SPACER | 1 |
| 5 | 18309 | BOLT - .25” X 1.25” | 1 |
| 6 | 59106 | CABLE CLAMP, CUSHIONED, 0.406” DIA | 1 |
| 7 | 10811 | NUT, LOCK - .25” | 1 |
| 8 | 59131 | CABLE TIE BASE | AR |

**ELECTRICIAL CONNECTOR COMPONENTS (NOT SHOWN IN ILLUSTRATIONS)**

| | | |
|---|---|---|
| | 53176 | CONNECTOR, TERMINAL 16-18G SOLID DEUTSCH |
| | 54065 | SOCKET, CONTACT - 2 |
| | 54064 | SOCKET, WEDGE LOCK - #2 |
| | 51909 | PIN, FEMALE - DEUTSCH 12-14GA |

# E100-00070 - STARTER AND ALTERNATOR ELECTRICIAL CABLES

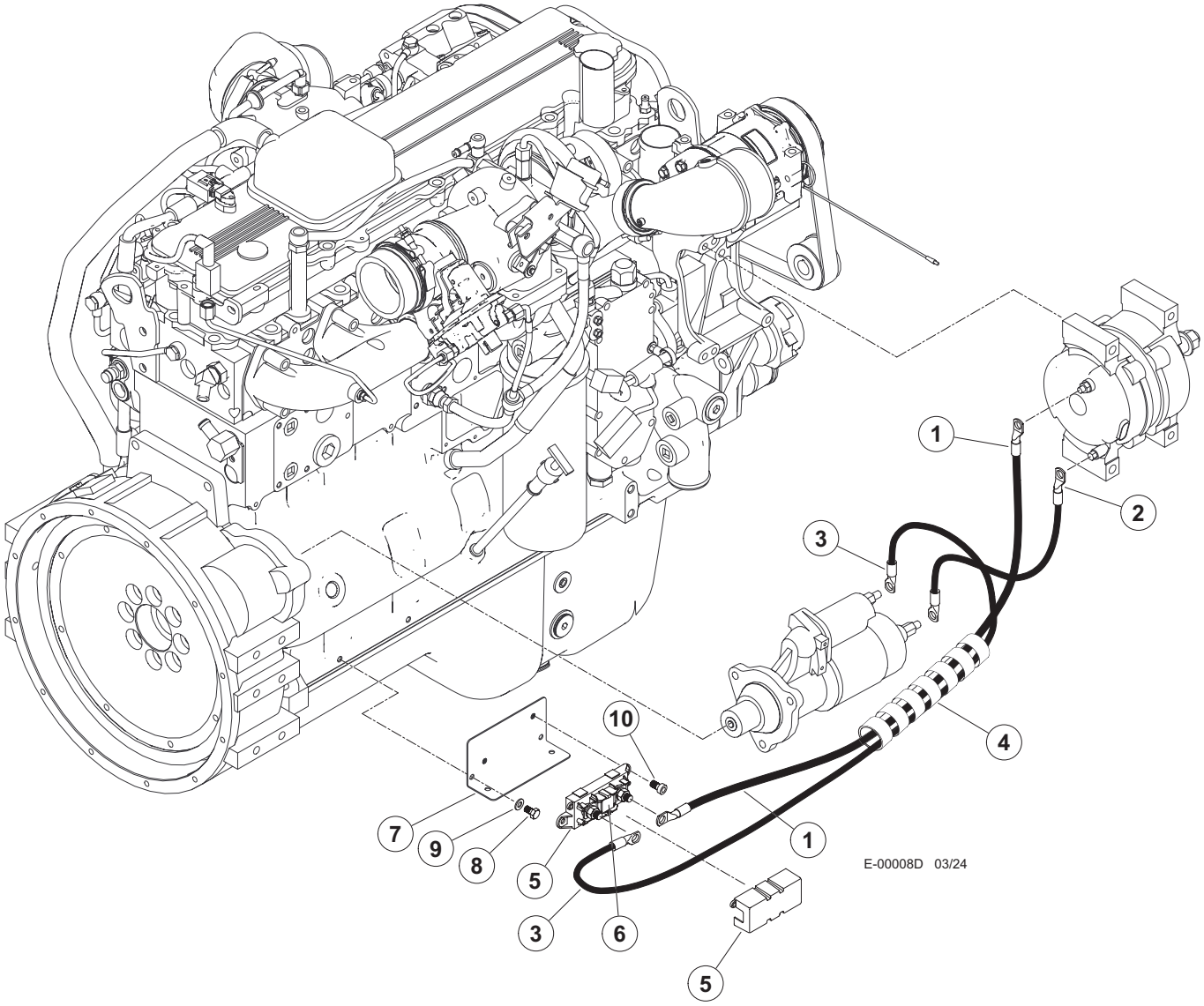


| Item | Part # | Description | Qty. |
|---|---|---|---|
| 1 | 62051 | CABLE, BATTERY - D - 30” ALT | 1 |
| 2 | 57922 | CABLE, BATTERY - NEGATIVE - 30.5” | 1 |
| 3 | 55332 | CABLE, BATTERY - POSITIVE - 26” | 1 |
| 4 | 20843 | SPIRAL WRAP | AR |
| 5 | 22247 | HOLDER, FUSE - 100 OR 250 AMP MEGA | 1 |
| 6 | 23619 | FUSE, 100 AMP (MEGA) | 1 |
| 7 | 60433 | BRACKET, FUSE HOLDER | 1 |
| 8 | 25059 | BOLT - 8MM-1.25P X 20MM | 2 |
| 9 | 15559 | WASHER, SAE FLAT - .3125” | 2 |
| 10 | 16133 | BOLT - 6MM-1.0P X 16MM | 2 |

# E100-00080 - ENGINE ELECTRICIAL HARNESS

**ADD DIELECTRIC SILICONE GREASE TO ELECTRICIAL CONNECTORS**

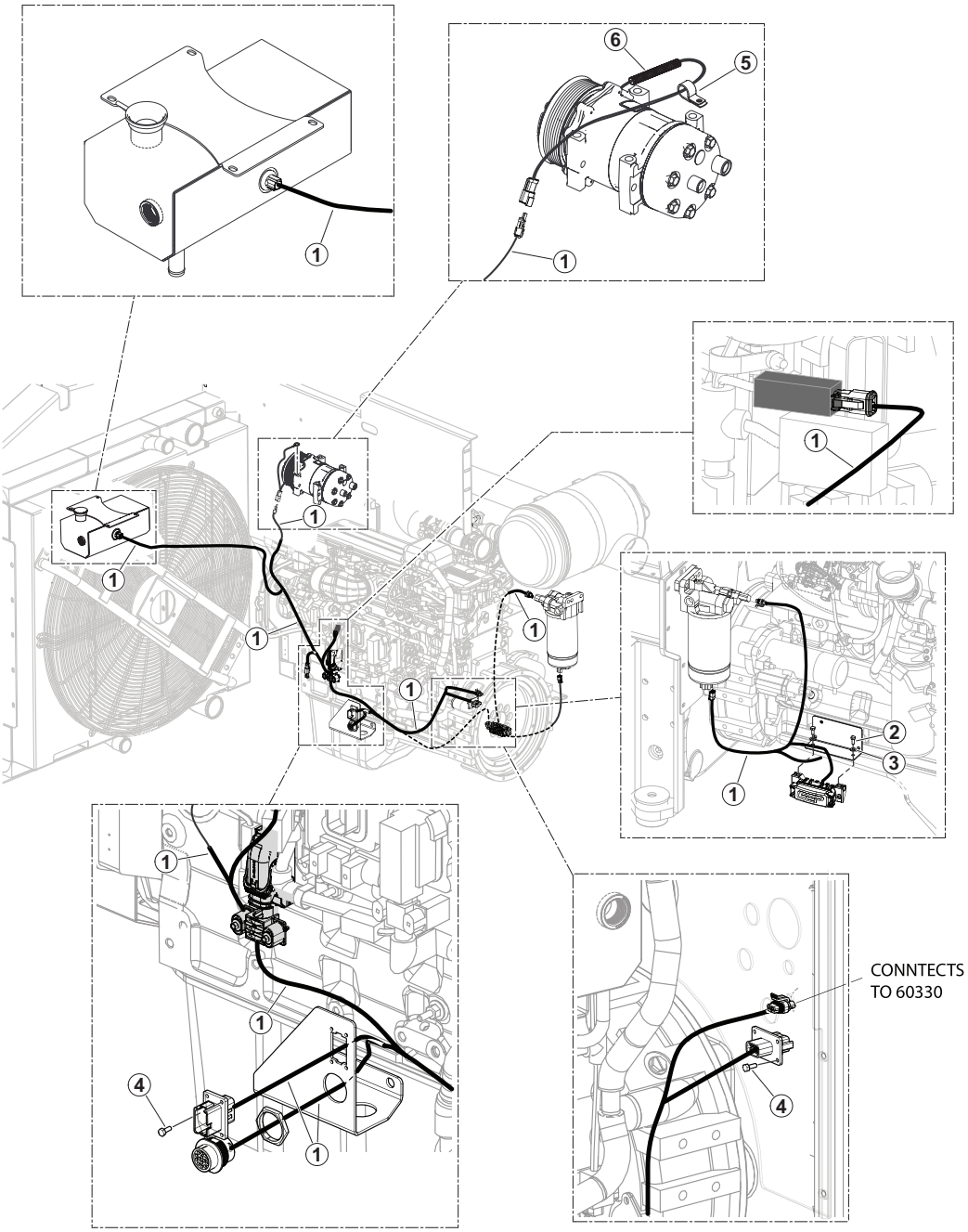


E-00009D 03/24

| Item | Part # | Description | Qty. |
|---|---|---|---|
| 1 | 60327 | HARNESS, ENGINE - CUMMINS STG5 | 1 |
| 2 | 16133 | BOLT - 6MM-1.0P X 16MM | 2 |
| 3 | 10800 | WASHER, FLAT - .25” | 2 |
| 4 | 15669 | SCREW, MACHINE - #10-24 X .5” | 4 |
| 5 | 59128 | CABLE CLAMP, CUSHIONED, 1/2” (.406”) | 1 |
| 6 | 17449 | LOOM, SPLIT - .5” (BULK) | 1’ |

# E100-00090 - ENGINE ECU GROUND HARNESS

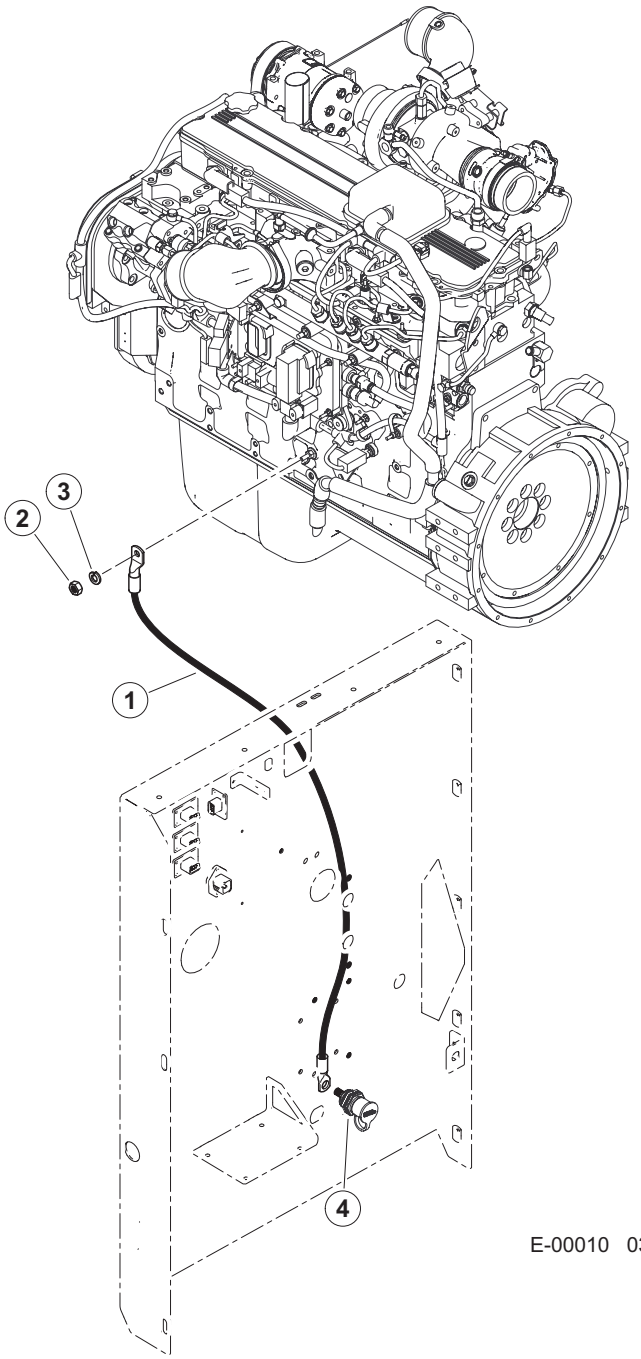


| Item | Part # | Description | Qty. |
|---|---|---|---|
| 1 | 58958 | HARNESS, GROUND CABLE ENGINE ECU L9 | 1 |
| 2 | 16117 | NUT, HEX - 6MM | 1 |
| 3 | 10756 | WASHER, LOCK - .25” | 1 |
| 4 | 54642 | STUD, THRU BATTERY CABLE 1/2” NEGATIVE | 1 |

# E100-00100 - ENGINE AFTER TREATMENT ELECTRICIAL HARNESS

**ADD DIELECTRIC SILICONE GREASE TO ELECTRICIAL CONNECTORS**

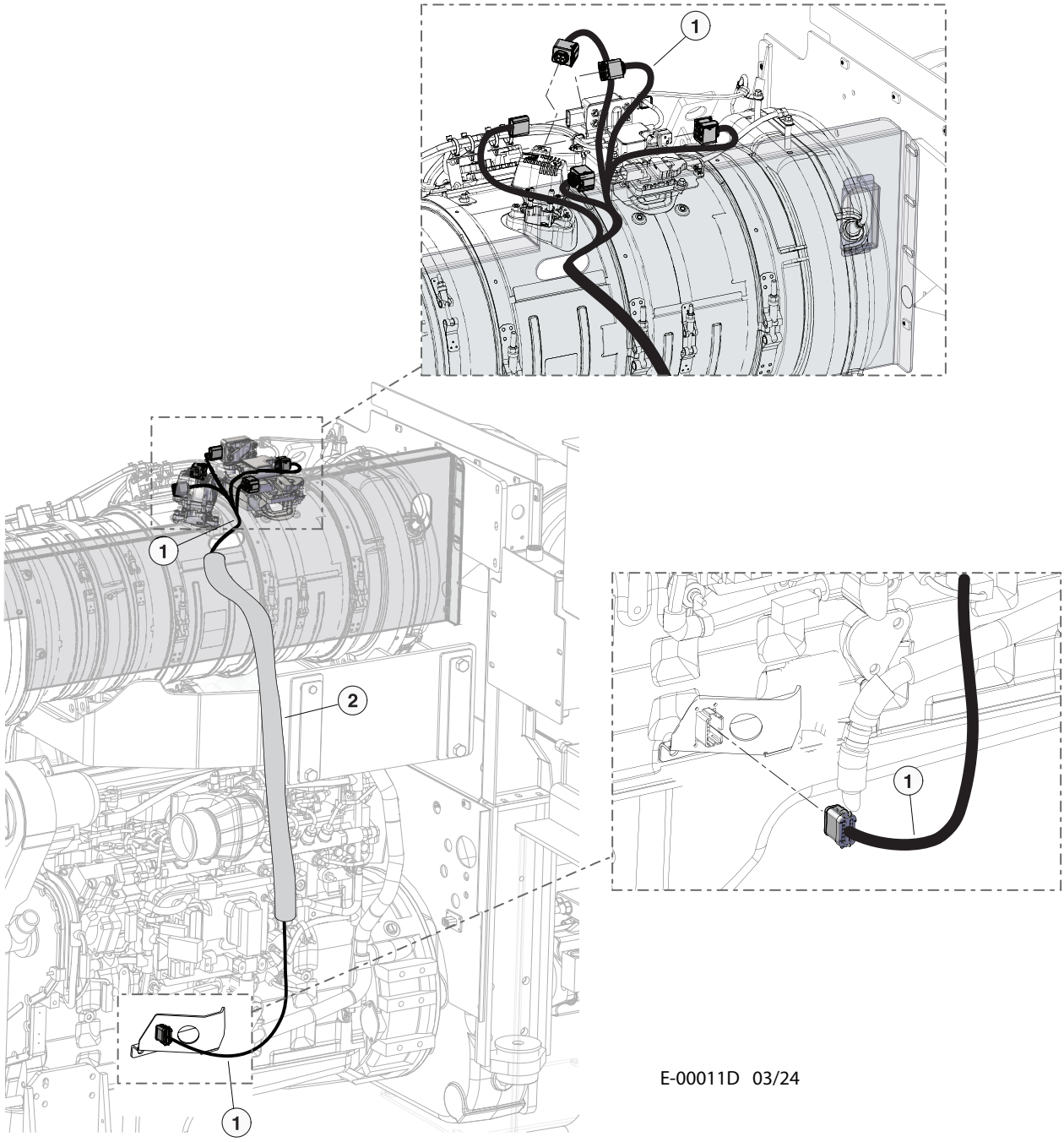


E-00011D 03/24

| Item | Part # | Description | Qty. |
|---|---|---|---|
| 1 | 60329 | HARNESS, AFTER TREATMENT - CUMMINS STG5 | 1 |
| 2 | 59070 | SLEEVE, PROTECTIVE - 2 INCH x 36” L | 1 |

# E100-00110 - GRID HEATER, FILL PUMP & GULLWING PUMP ELECTRICIAL HARNESSES

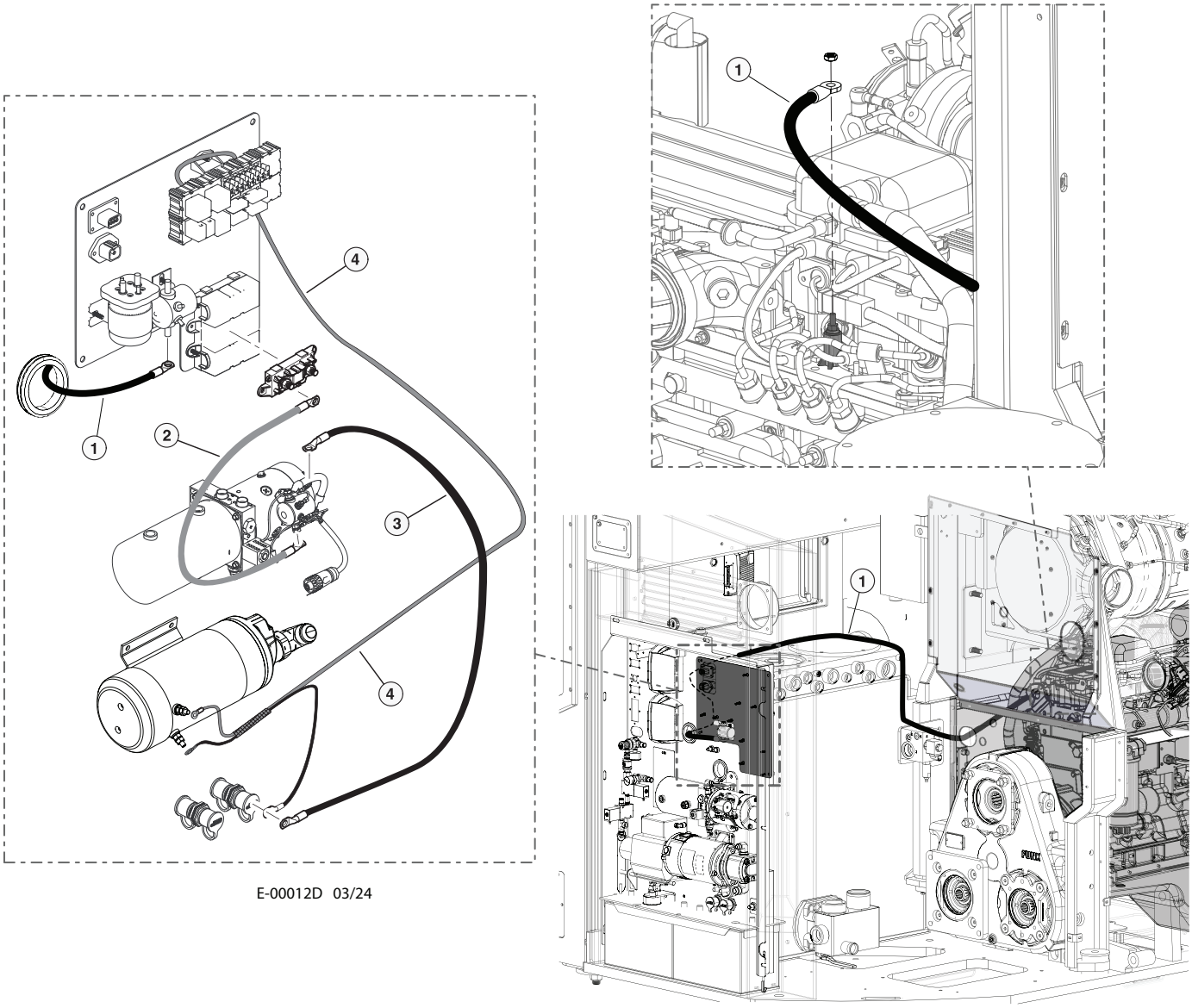


E-00012D 03/24

| Item | Part # | Description | Qty. |
|---|---|---|---|
| 1 | 55446 | CABLE, GRID HEATER FUSE | 1 |
| 2 | 55338 | CABLE, BATTERY - POSITIVE - 38” | 1 |
| 3 | 55336 | CABLE, BATTERY - NEGATIVE - 24” | 1 |
| 4 | 46695 (KIT) | HARNESS, FILL PUMP (PART OF ENGINE ELECTRICAL CENTER ASSEMBLY) | 1 |

# E100-00120 - STARTER CABLES

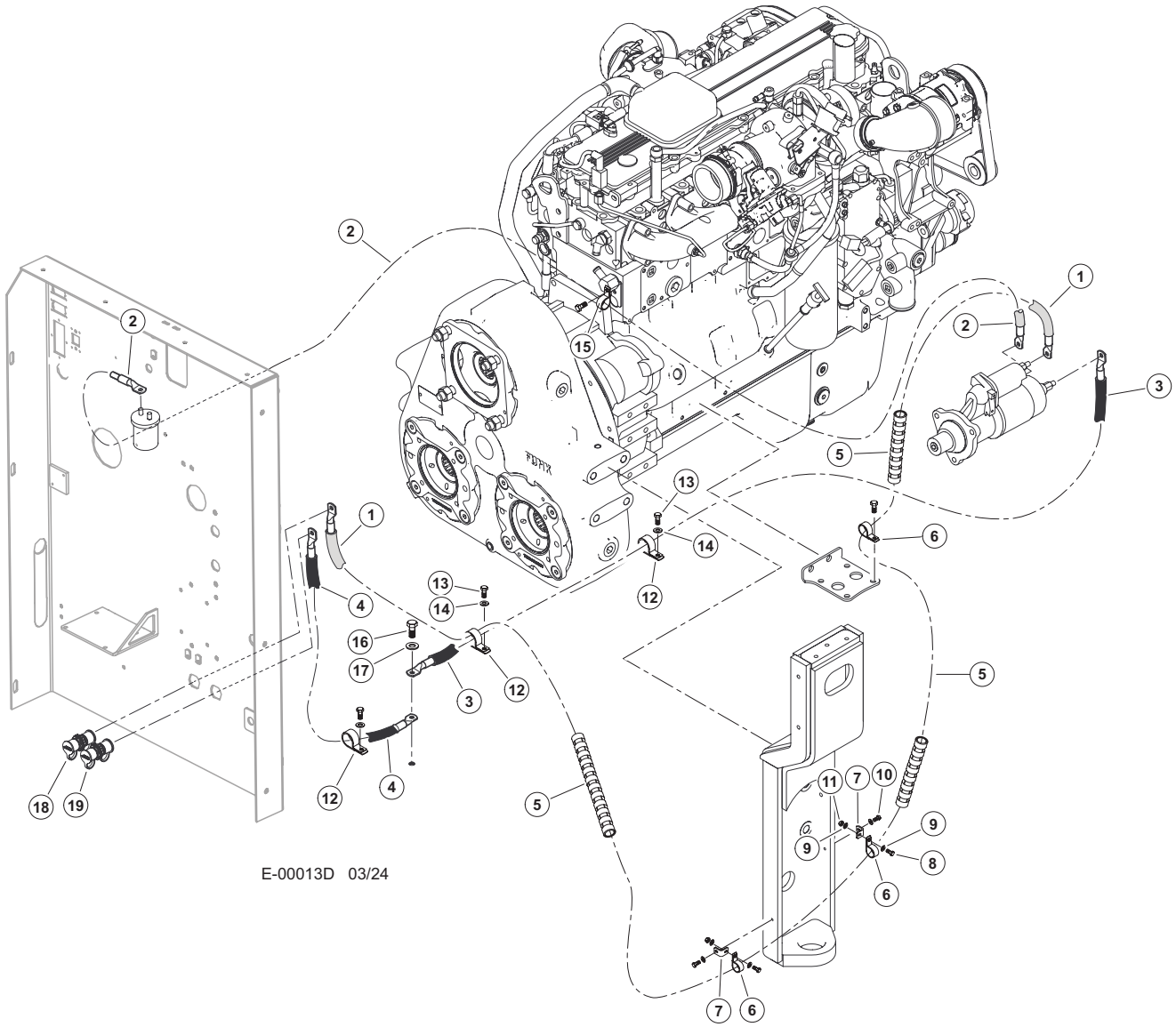


| Item | Part # | Description | Qty. |
|---|---|---|---|
| 1 | 55327 | CABLE, BATTERY - POSITIVE - 94” | 1 |
| 2 | 55194 | HARNESS, START RELAY TO STARTER SOL. | 1 |
| 3 | 55328 | CABLE, BATTERY - NEGATIVE - 46” | 1 |
| 4 | 55329 | CABLE, BATTERY - NEGATIVE - 54” | 1 |
| 5 | 19677 | PROTECTOR, HOSE - SPRIAL (1.25”)(BULK) | AR |
| 6 | 16119 | CLAMP, HOSE - COATED STRAP - 1” | 3 |
| 7 | 46421 | BRACKET, COOLER LINE SUPPORT | 3 |
| 8 | 18309 | BOLT - .25” X 1.25” | 2 |
| 9 | 10757 | WASHER, SAE FLAT - .25” | 4 |
| 10 | 15576 | BOLT - .25” X 1” | 2 |
| 11 | 10811 | NUT, LOCK - .25” | 1 |
| 12 | 58382 | CABLE CLAMP, CUSHIONED, 1_1/4” DIA | 3 |
| 13 | 15605 | BOLT - .3125” X .75” | 3 |
| 14 | 15559 | WASHER, SAE FLAT - .3125” | 3 |
| 15 | 58381 | 1/2” CUSHIONED CABLE CLAMP | 1 |
| 16 | 10783 | BOLT - .5” X 1” | 1 |
| 17 | 15534 | WASHER, SAE FLAT - .5” | 1 |
| 18 | 54343 | STUD, THRU BATTERY CABLE POSITIVE | 1 |
| 19 | 54642 | STUD, THRU BATTERY CABLE 1/2” NEGATIVE | 1 |

# E100-00130 - DEF TANK ELECTRICIAL WIRE HARNESS

**ADD DIELECTRIC SILICONE GREASE TO ELECTRICIAL CONNECTORS**

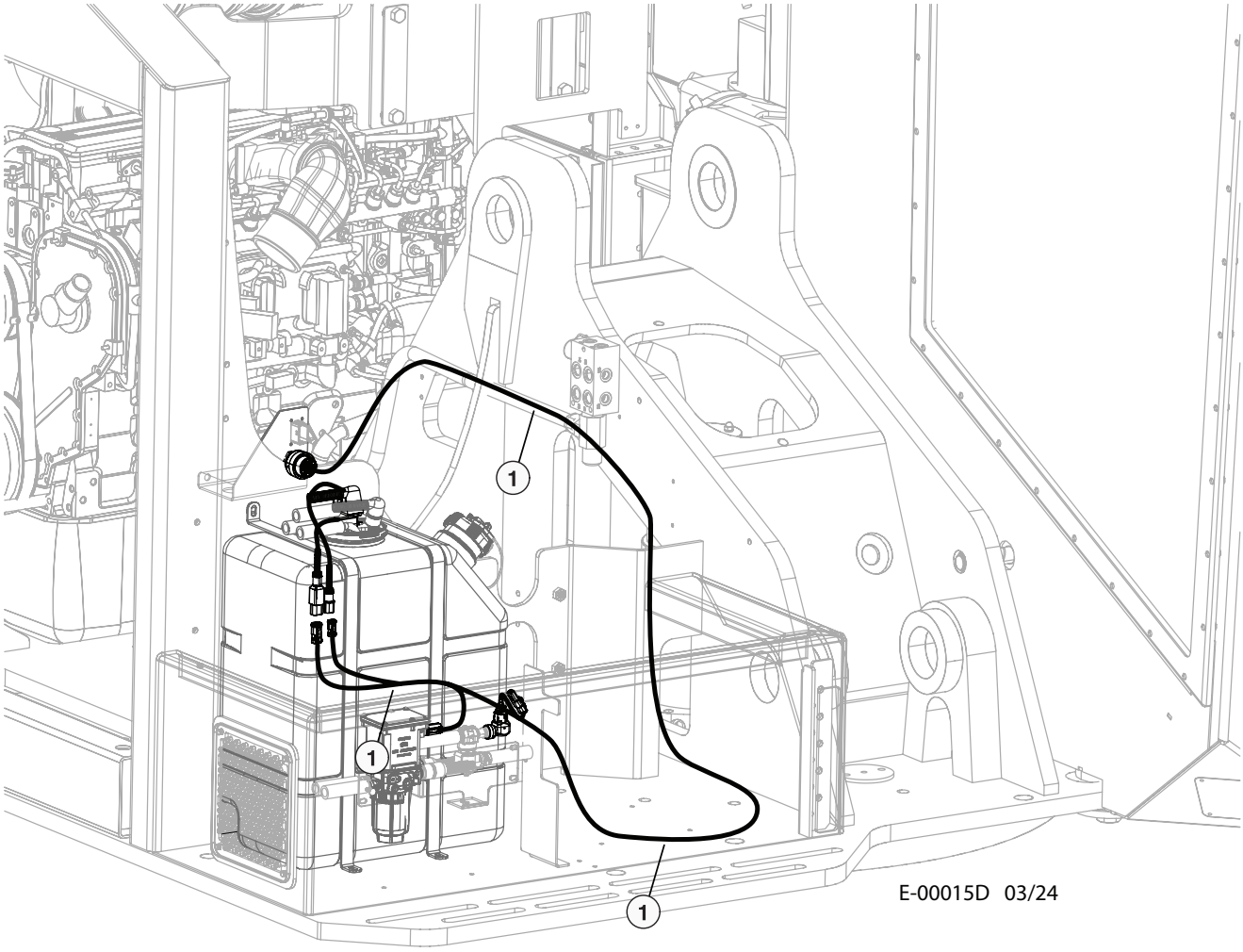


| Item | Part # | Description | Qty. |
|---|---|---|---|
| 1 | 60328 | HARNESS, DEF TANK - CUMMINS STG5 | 1 |

# E100-00140 - BATTERY CABLES

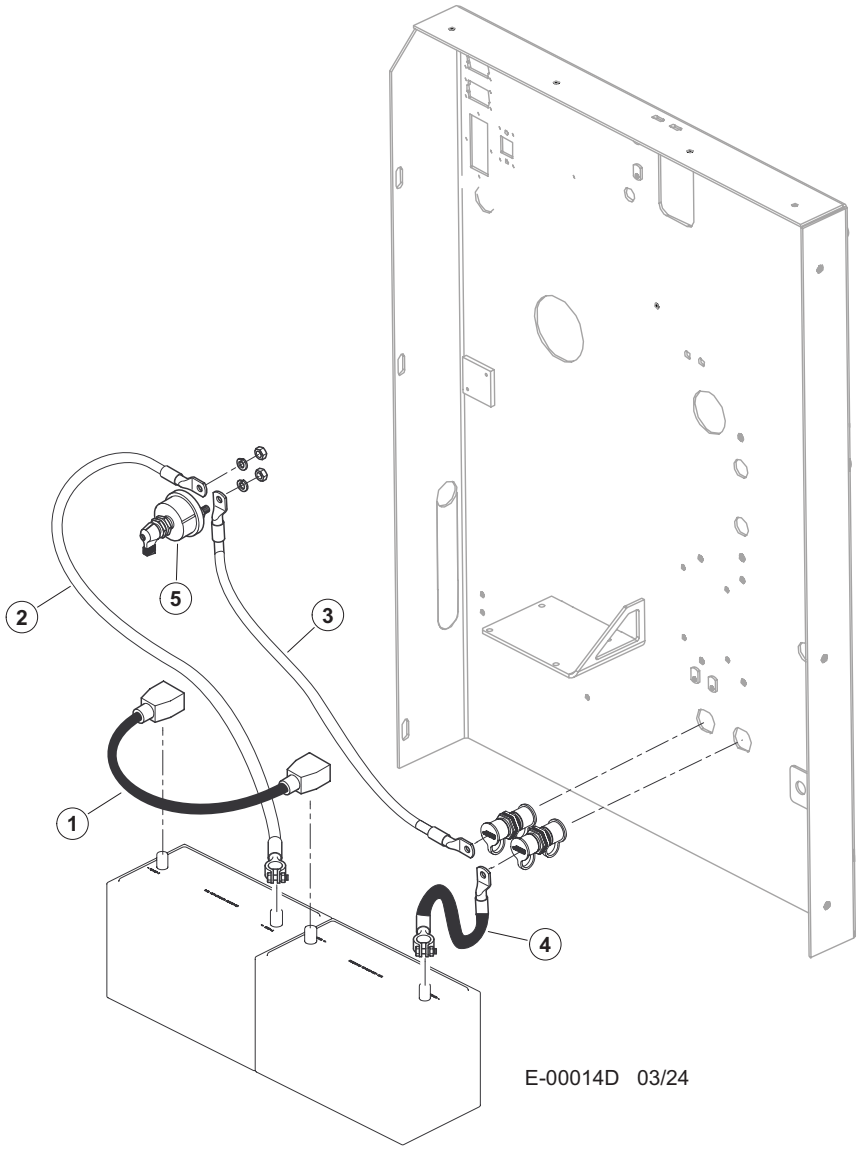


| Item | Part # | Description | Qty. |
|---|---|---|---|
| 1 | 24300 | CABLE, BATTERY POS/NEG JUMPER | 1 |
| 2 | 55334 | CABLE, BATTERY - POSITIVE - “C” - 14” | 1 |
| 3 | 55333 | CABLE, BATTERY-POSITIVE- “C” - 10” | 1 |
| 4 | 55337 | CABLE, BATTERY - NEGATIVE - “C” - 9” | 1 |
| 5 | 25200 | SWITCH, MASTER SHUT-OFF(1/2” STUD)NEW | 1 |

# E100-00150 - CABIN EXTERIOR LIGHTS

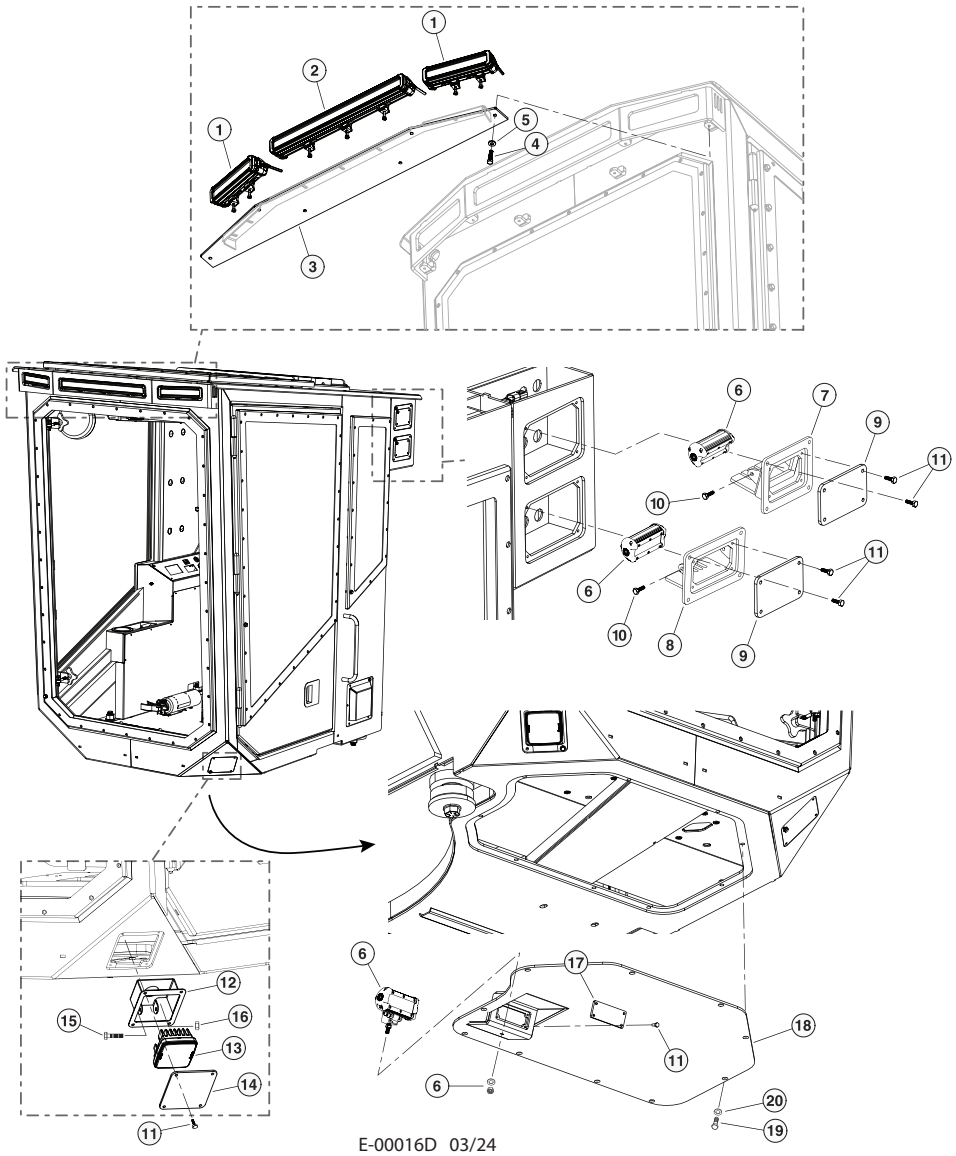

E-00016D 03/24

| Item | Part # | Description | Qty. |
|---|---|---|---|
| 1 | 59042 | LIGHT BAR - 6 LED | 2 |
| 2 | 59047 | LIGHT BAR - 15 LED | 1 |
| 3 | 49184 | WELDMENT, LIGHT BRACKET FRONT D-SERIES | 1 |
| 4 | 10783 | BOLT - .5” X 1.00” | 4 |
| 5 | 15534 | WASHER, SAE FLAT - .5” | 4 |
| 6 | 59043 | LIGHT BAR - 3LED (“D” GROTE) | 3 |
| 7 | 49223 | MOUNT, LIGHT - LED - (UPPER) | 1 |
| 8 | 49382 | MOUNT, LIGHT - LED - (LOWER) | 1 |
| 9 | 49222 | LEXON, LIGHT - CAB REAR D-SERIES | 2 |
| 10 | 80505 | BOLT - M10 X 20 | 4 |
| 11 | 59090 | SCREW, 1/4-20x0.75, SHC, BUTTON HD | 28 |
| 12 | 60885 | BRACKET, LIGHT - CAB CORNER | 2 |
| 13 | 59044 | LIGHT CUBE - 6LED (“D” GROTE) | 2 |
| 14 | 49224 | LEXON, LIGHT - FRONT LOWER D-SERIES | 2 |
| 15 | 15568 | BOLT - .25” X 2” | 1 |
| 16 | 10811 | NUT, LOCK - .25” | 1 |
| 17 | 60133 | LEXAN, 3 LED LIGHT GUARD - D-MODEL | 1 |
| 18 | 49226 | COVER, MOUNT - 3 LED LIGHTS D-SERIES | 1 |
| 19 | 15589 | BOLT - .3125” X 1” | 9 |
| 20 | 15559 | WASHER, SAE FLAT - .3125” | 9 |

# E100-00160 - WORKING LIGHTS - FRONT DOOR

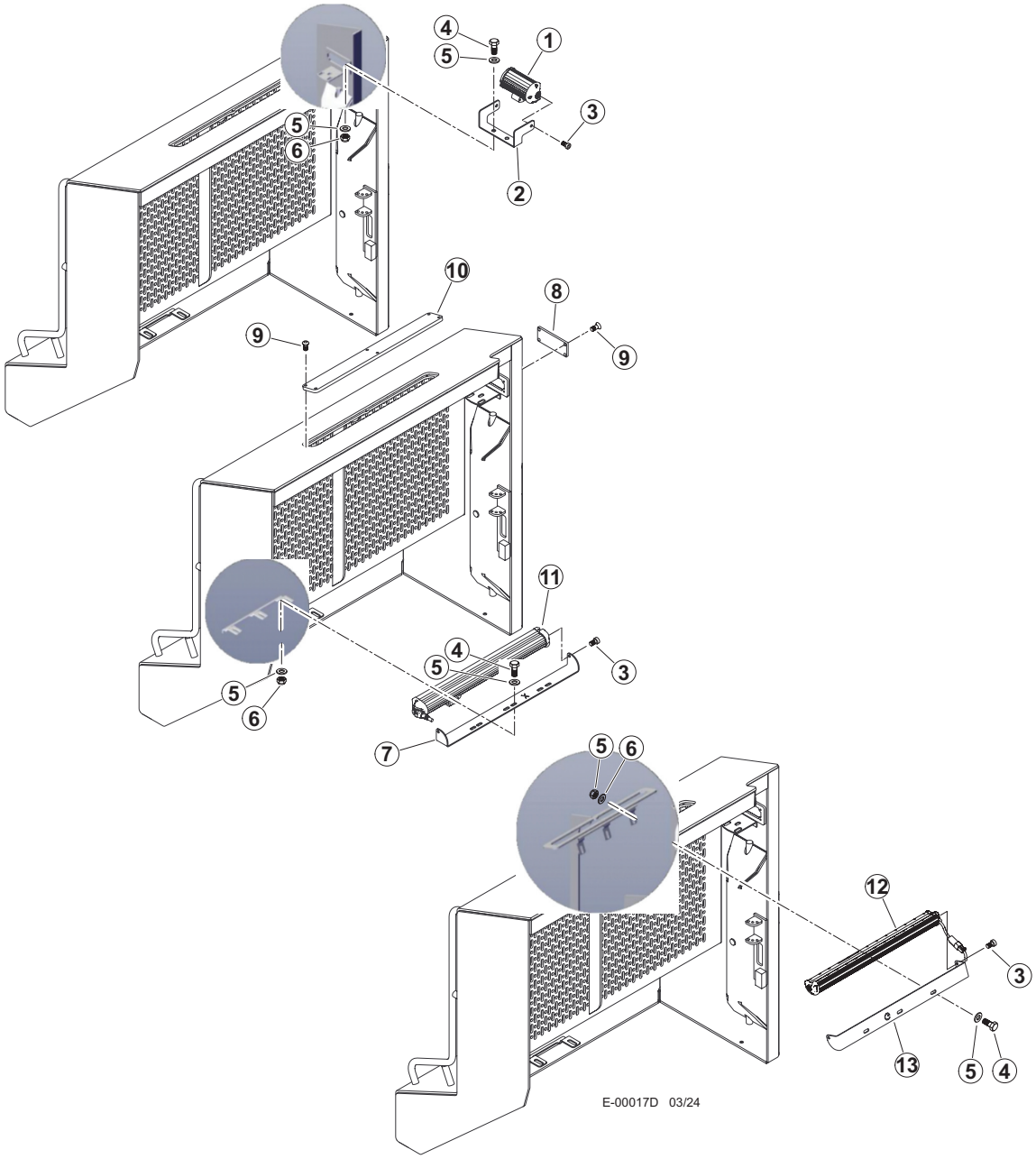


| Item | Part # | Description | Qty. |
|---|---|---|---|
| 1 | 59043 | LIGHT BAR - 3LED (“D” GROTE) | 1 |
| 2 | 61055 | PLATE, LED ADAPTER | 1 |
| 3 | 80505 | BOLT - M10 X 20 | 6 |
| 4 | 15589 | BOLT - .3125” X 1” | 8 |
| 5 | 10801 | WASHER, FLAT - .3125” | 16 |
| 6 | 10812 | NUT, LOCK - .3125” | 8 |
| 7 | 61553 | MOUNT, LIGHT 15LED - GROTE | 1 |
| 8 | 60133 | LEXAN, 3 LED LIGHT GUARD | 1 |
| 9 | 59090 | SCREW, 1/4-20x0.75, SHC, BUTTON HD | 10 |
| 10 | 49335 | LEXAN, 15 LED LIGHT GUARD | 1 |
| 11 | 59047 | LIGHT BAR - 15 LED (VisionX) | 1 |
| 12 | 59041 | LIGHT BAR - 15LED (“D” GROTE) | 1 |
| 13 | 61555 | PLATE, LIGHT MT | 1 |

# E0410 - 2222300 - HORN AND BACK UP ALARM

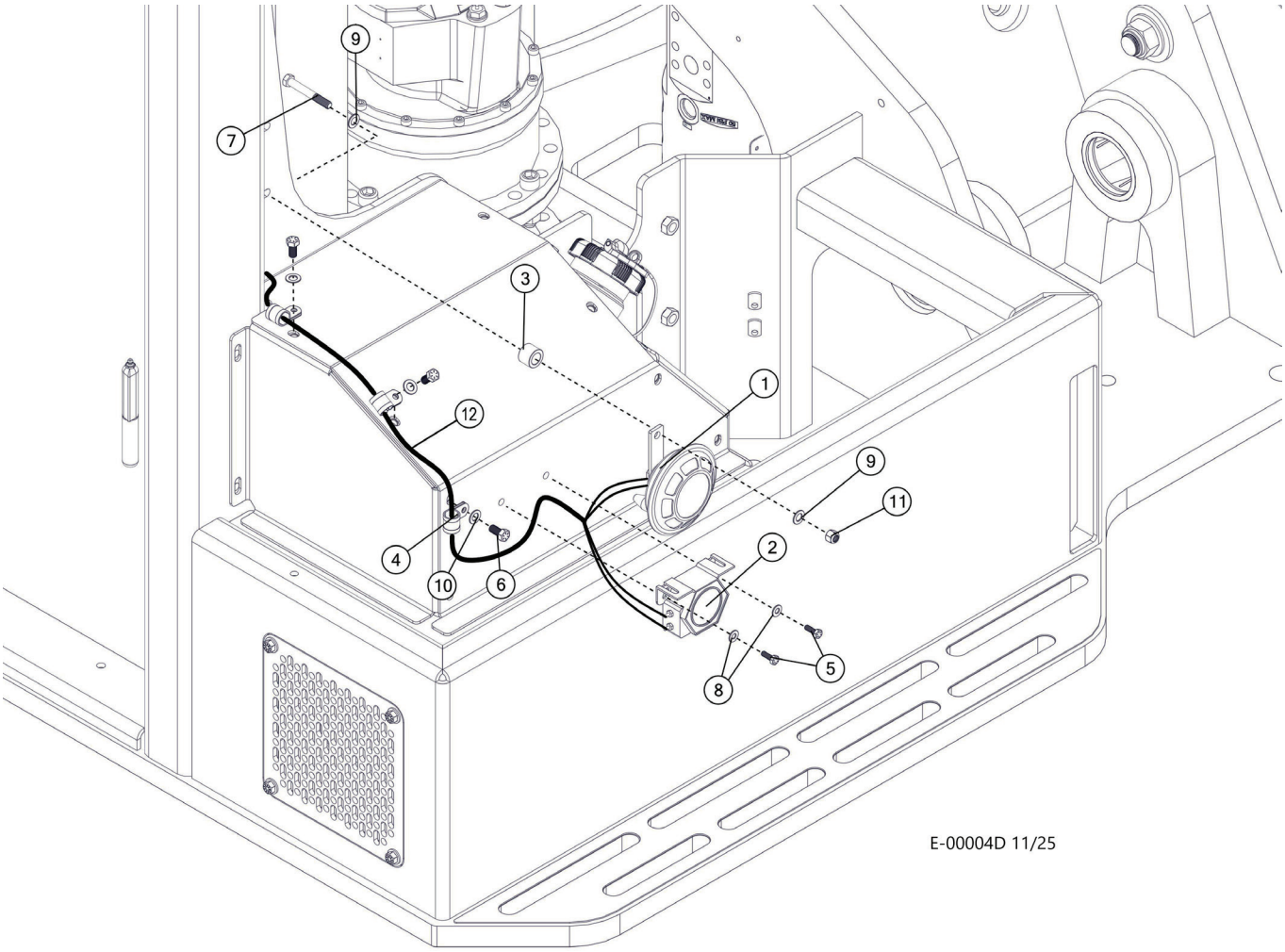


| Item | Part # | Description | Qty. |
|---|---|---|---|
| 1 | 55131 | HORN, ELECTRIC - 24V | 1 |
| 2 | 53193 | SIREN, BACKUP - 24V | 1 |
| 3 | 19219 | SPACER | 1 |
| 4 | 59128 | CABLE CLAMP, CUSHIONED, 1/2” (.406”) | 3 |
| 5 | 15604 | BOLT - .25” X .75” | 2 |
| 6 | 15542 | BOLT - .375” X .75” | 3 |
| 7 | 23265 | BOLT - .375” X 2.25” | 1 |
| 8 | 10800 | WASHER, FLAT - .25” | 2 |
| 9 | 10802 | WASHER, FLAT - .375” | 2 |
| 10 | 15528 | WASHER, SAE FLAT - .375” | 3 |
| 11 | 10813 | NUT, LOCK - .375” | 1 |
| 12 | 58995 | HARNESS, HORN AND BACKUP CE | 1 |

# E0410 - 2222300 - HORN AND BACK UP ALARM

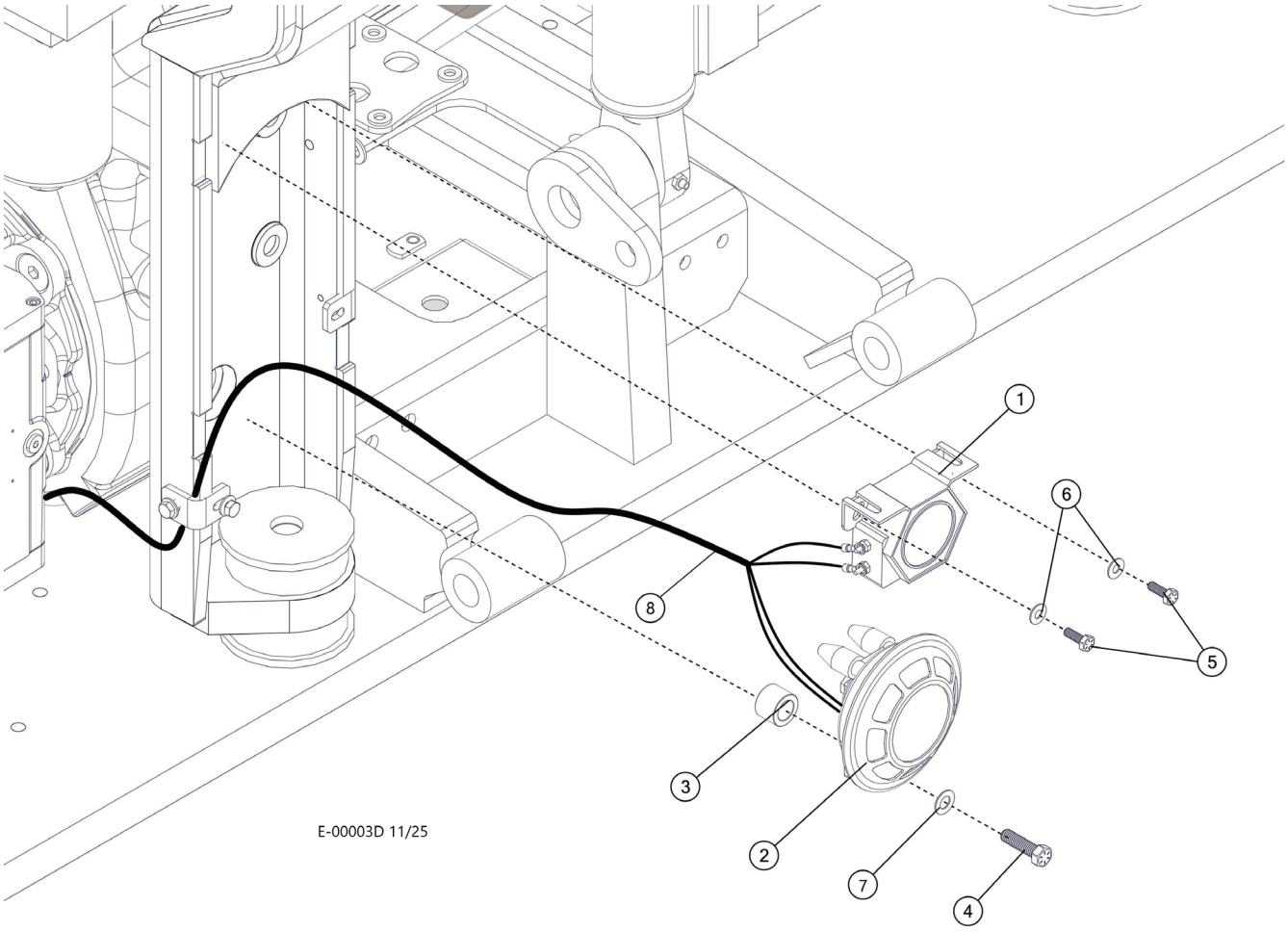


| Item | Part # | Description | Qty. |
|---|---|---|---|
| 1 | 55131 | HORN, ELECTRIC - 24V | 1 |
| 2 | 53193 | SIREN, BACKUP - 24V | 1 |
| 3 | 19219 | SPACER | 1 |
| 4 | 10731 | BOLT - .375” X 1.5” | 1 |
| 5 | 15604 | BOLT, .25”X.75” | 2 |
| 6 | 10757 | WASHER, SAE FLAT - .25” | 2 |
| 7 | 10802 | WASHER, FLAT - .375” | 1 |
| 8 | 58995 | HARNESS, HORN AND BACKUP CE | 1 |

# E100-00180 - CABIN ACCESSORIES-CAMERA

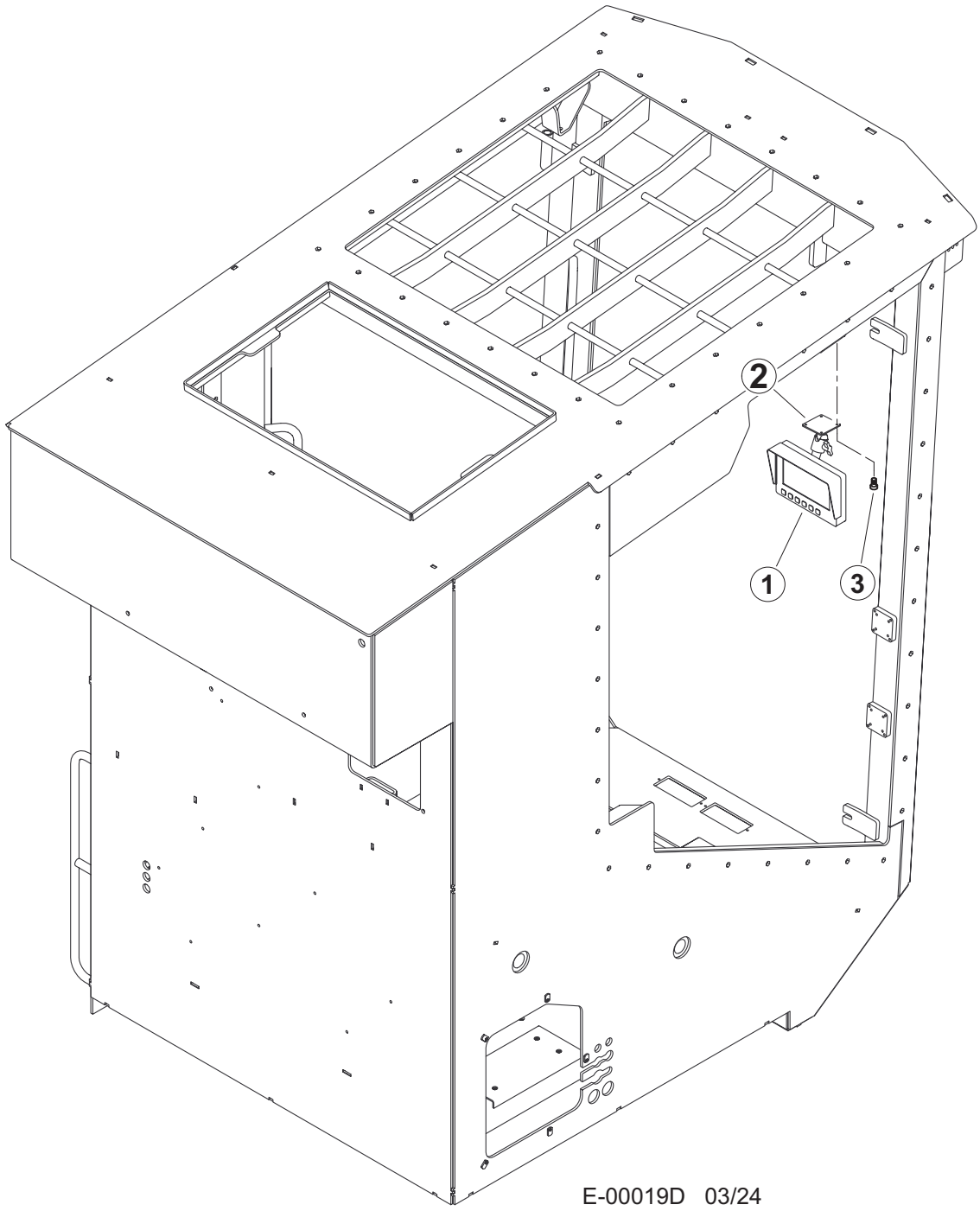


E-00019D 03/24

| Item | Part # | Description | Qty. |
|---|---|---|---|
| | 52557 (KIT) | CAMERA, REARVIEW | 1 |
| 1 | 53780 | 7” LCD MONITOR | 1 |
| 2 | VOSHD6MNT | CAMERA MOUNT | 1 |
| 3 | 59089 | SCREW, 10-24 X 3/4 SHC, BUTTON HD | 4 |

# E100-00190 - COVER, CAMERA INSTALL

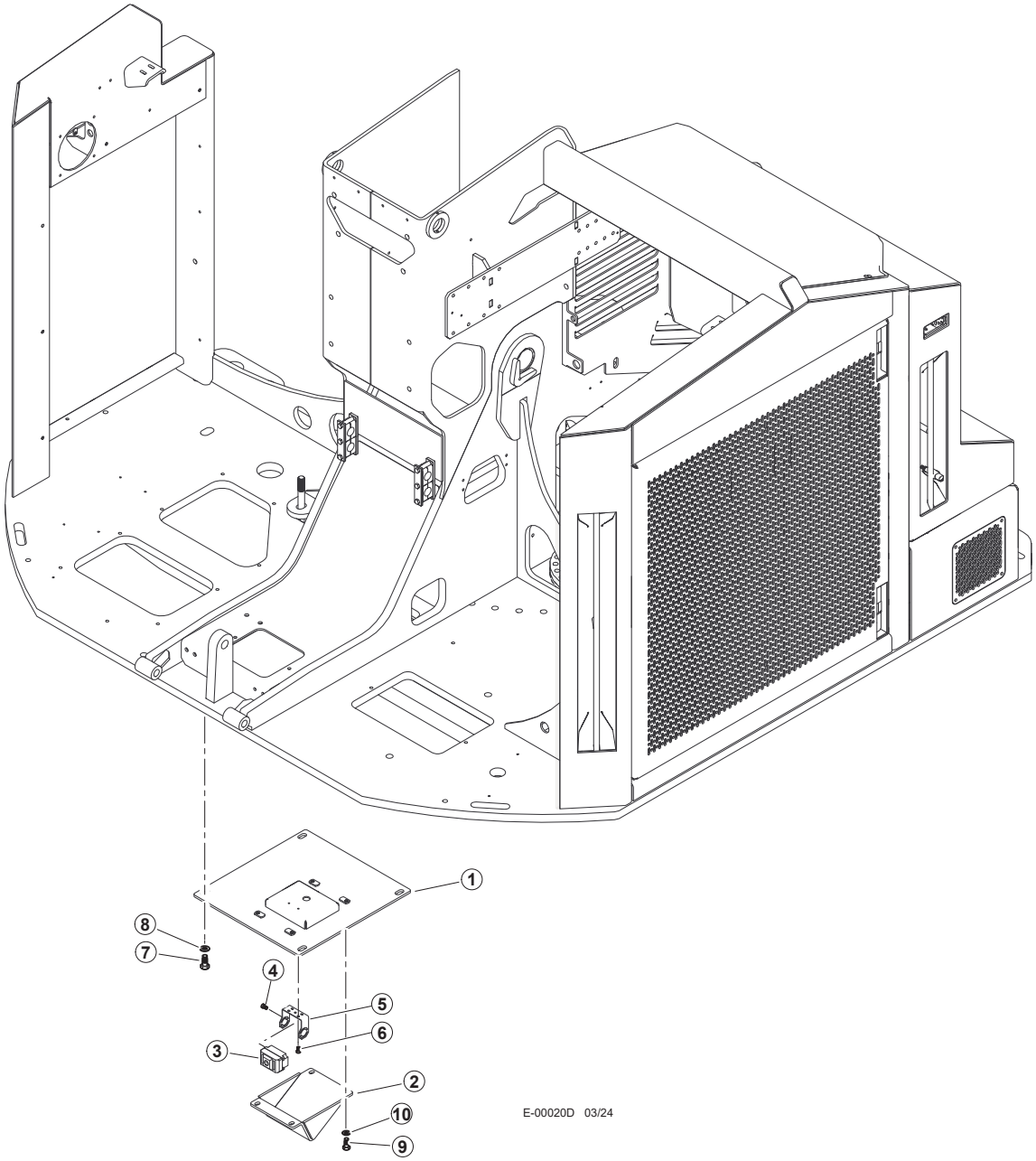


| Item | Part # | Description | Qty. |
|---|---|---|---|
| 1 | 60416 | BOX, CAMERA - TOP | 1 |
| 2 | 60150 | CAMERA GUARD | 1 |
| 3 | VCMS20B | CAMERA | 1 |
| 4 | 58089 | SCREW, 10-24 X 3/4 SHC, BUTTON HD | 2 |
| 5 | 72704 | CAMERA MOUNT | 1 |
| 6 | 10783 | BOLT - .5” X 1.00” | 4 |
| 7 | 15534 | WASHER, SAE FLAT - .5” | 4 |
| 8 | 15542 | BOLT - .375” | 4 |
| 9 | 15528 | WASHER, SAE FLAT - .375” | 4 |
| * | 60605 | WELDMENT, D - UPPER | 1 |

# E100-00200 - COVER, CAMERA NON-SELECT

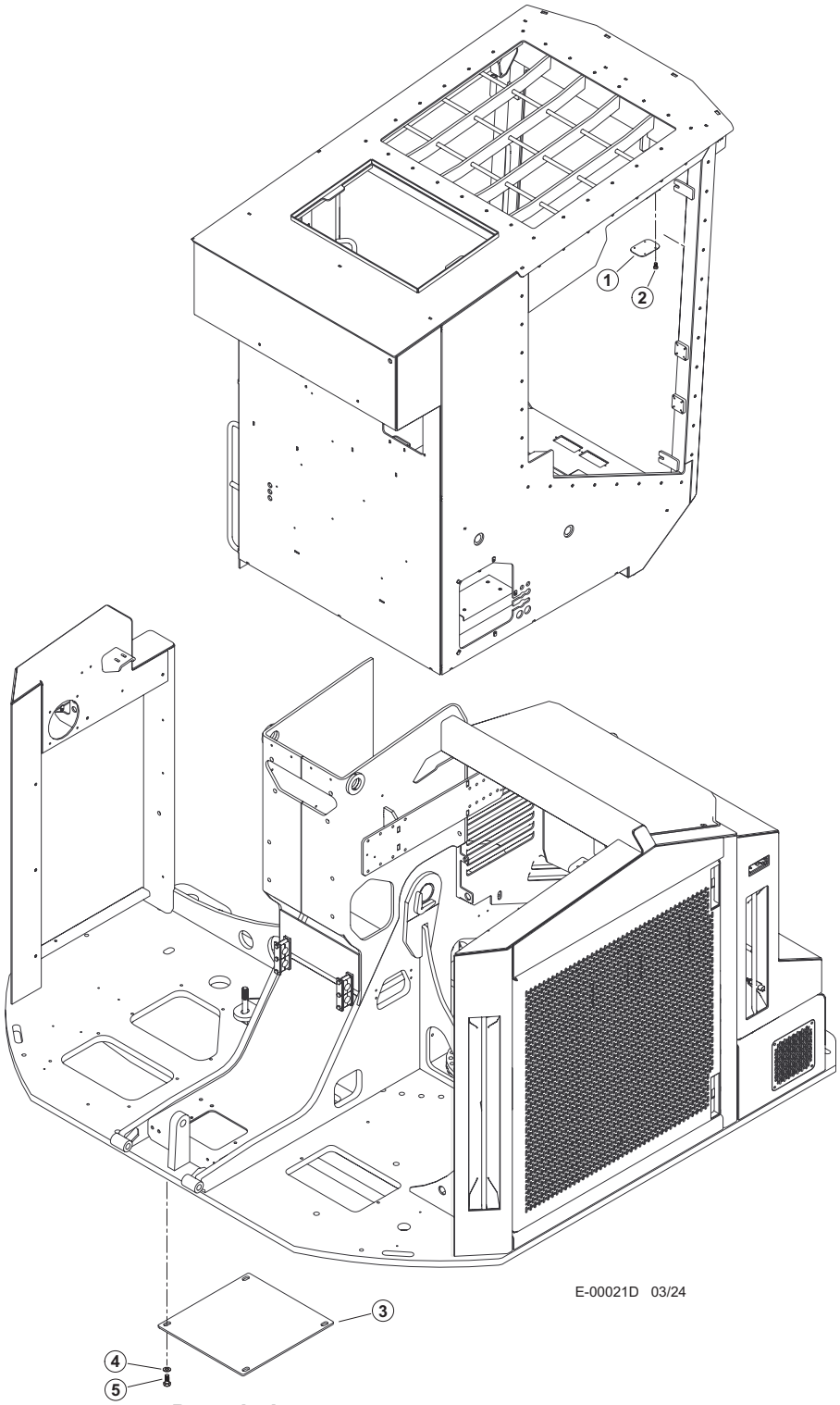


| Item | Part # | Description | Qty. |
|---|---|---|---|
| 1 | 61030 | PLATE, D-CAB CAMERA COVER | 1 |
| 2 | 59089 | SCREW, 10-24 X 3/4 SHC, BUTTON HD | 4 |
| 3 | 46466 | COVER, BOTTOM OIL PAN- REAR | 1 |
| 4 | 10783 | BOLT - .5” X 1.00” | 4 |
| 5 | 15534 | WASHER, SAE FLAT - .5” | 4 |

# E100-00210 - CONTROL HARNESS, PROCESSOR, U

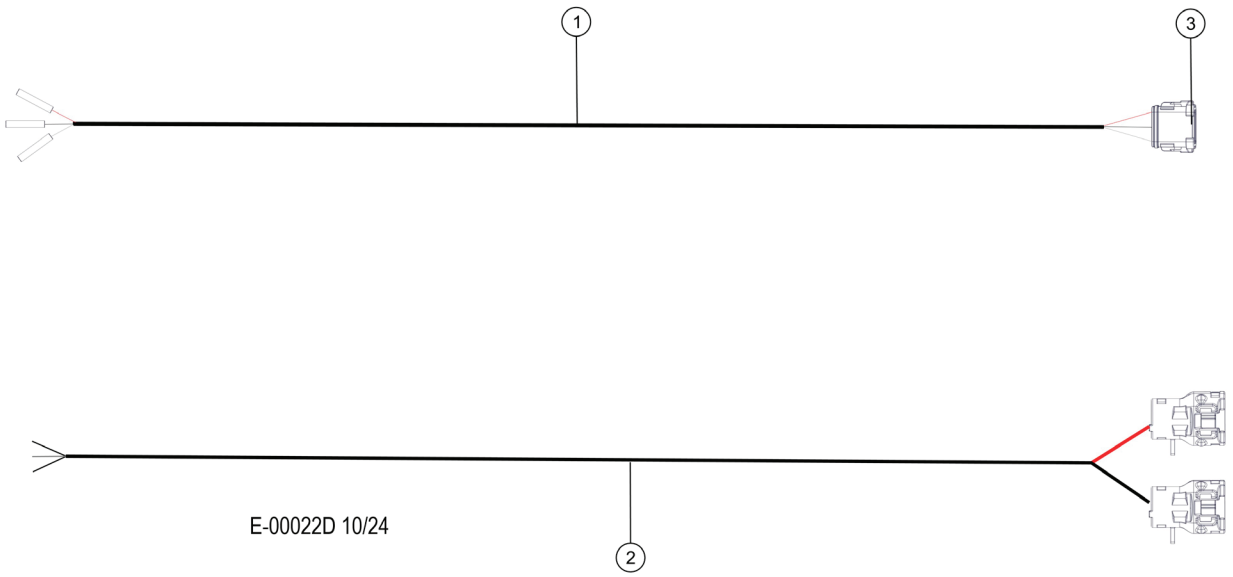


| Item | Part # | Description | Qty. |
|---|---|---|---|
| 1 | 52644 | HARNESS, POWER - PROCESSOR | 1 |
| 2 | 53863 | HARNESS, PROCESSER - PUMP 1/PUMP 2 | 1 |
| 3 | 53260 | DEUTSCH 8 CONTACT SOCKET KIT | 1 |

# E100-00215 - LEFT & RIGHT CONTROL PODS

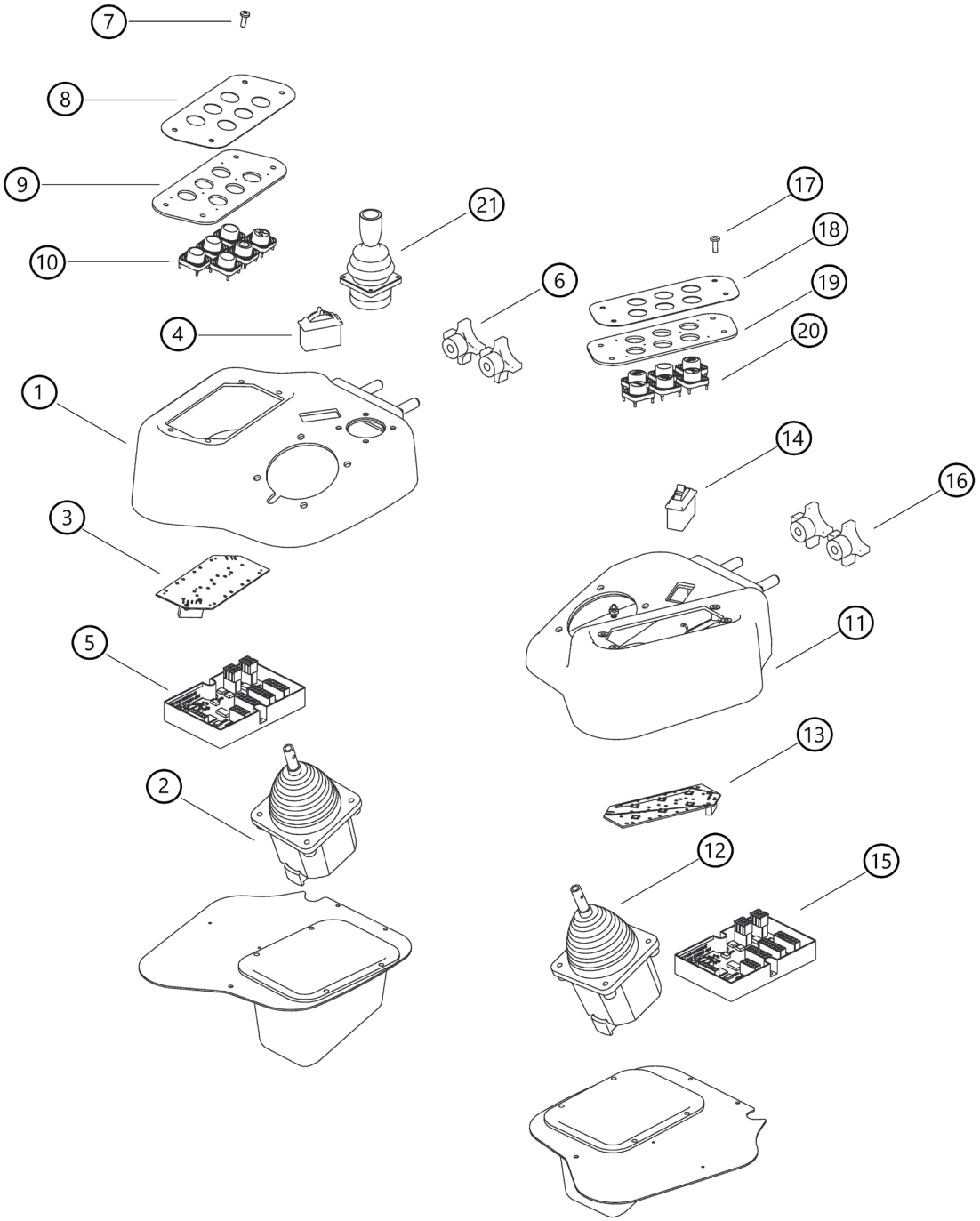


E-00027D 02/26

# E100-00215 - LEFT & RIGHT CONTROL PODS

| Item | Part # | Description | Qty. |
|---|---|---|---|
| 1 | 55422 | POD, JOYSTICK - RH (C&D RH TRACK) | 1 |
| 2 | 54126 | JOYSTICK, MDL (P&G) CAN RIGHT | 1 |
| 3 | 55666 | PANEL, 6 SWITCH - POD RH (SWITCHES) | 1 |
| 4 | 55703 | POT, DETENTED - THUMB WHEEL - C-SERIES | 1 |
| 5 | 55707 | BOARD, CAN DRIVER - RH (PLASTIC POD) | 1 |
| 6 | CALL | KNOB (DK-57) | 2 |
| 7 | CALL | SCREW, 8-32-1/2" | 1 |
| 8 | CALL | COVER, SWITCHES (M1335-227) | 1 |
| 9 | CALL | SPACER, SWITCHES | 1 |
| 10 | CALL | BUTTON, BLANK (M13361) | 1 |
| * | CALL | BUTTON, DISC SAW (M13361-009) | 1 |
| * | CALL | BUTTON, MOTOR SHIFT (M13361-10) | 1 |
| 11 | 55417 | POD, JOYSTICK - LH (C&D SERIES WHEEL/TRA | 1 |
| 12 | 54125 | JOYSTICK, MDL - CAN LEFT | 1 |
| 13 | 55667 | PANEL, 6 SWITCH - POD LH (SWITCHES) | 1 |
| 14 | 55703 | POT, DETENTED - THUMB WHEEL - C-SERIES | 1 |
| 15 | 55708 | BOARD, CAN DRIVER - LH (PLASTIC POD) | 1 |
| 16 | CALL | KNOB (DK-57) | 2 |
| 17 | CALL | SCREW, 8-32-1/2" | 1 |
| 18 | CALL | COVER, SWITCHES (M1335-227) | 1 |
| 19 | CALL | SPACER, SWITCHES | 1 |
| 20 | CALL | BUTTON, BLANK (M13361) | 1 |
| * | CALL | BUTTON, ARMING (M13361-004) | 1 |
| * | CALL | BUTTON, CHARGE HEATER (M13361-005) | 1 |
| * | CALL | BUTTON, PARKING BRAKE (M13361-003) | 1 |
| * | CALL | BUTTON, HORN (M13361-006) | 1 |
| * | CALL | BUTTON, AUTO THROTTLE (M13361-007) | 1 |
| 21 | 57423 | JOYSTICK, STEER - PLASTIC POD - CURRENT | 1 |

# HYDRAULIC SYSTEM - (H)

# H100-00000 - MAIN BOOM CYLINDER PIPING - VALVE TO BULKHEAD - (K220/L90 VALVE)

**NOTE: HYDRAULIC FITTINGS GET 545 LOCTITE™**

**NOTE: APPLY GREASE TO O-RINGS**

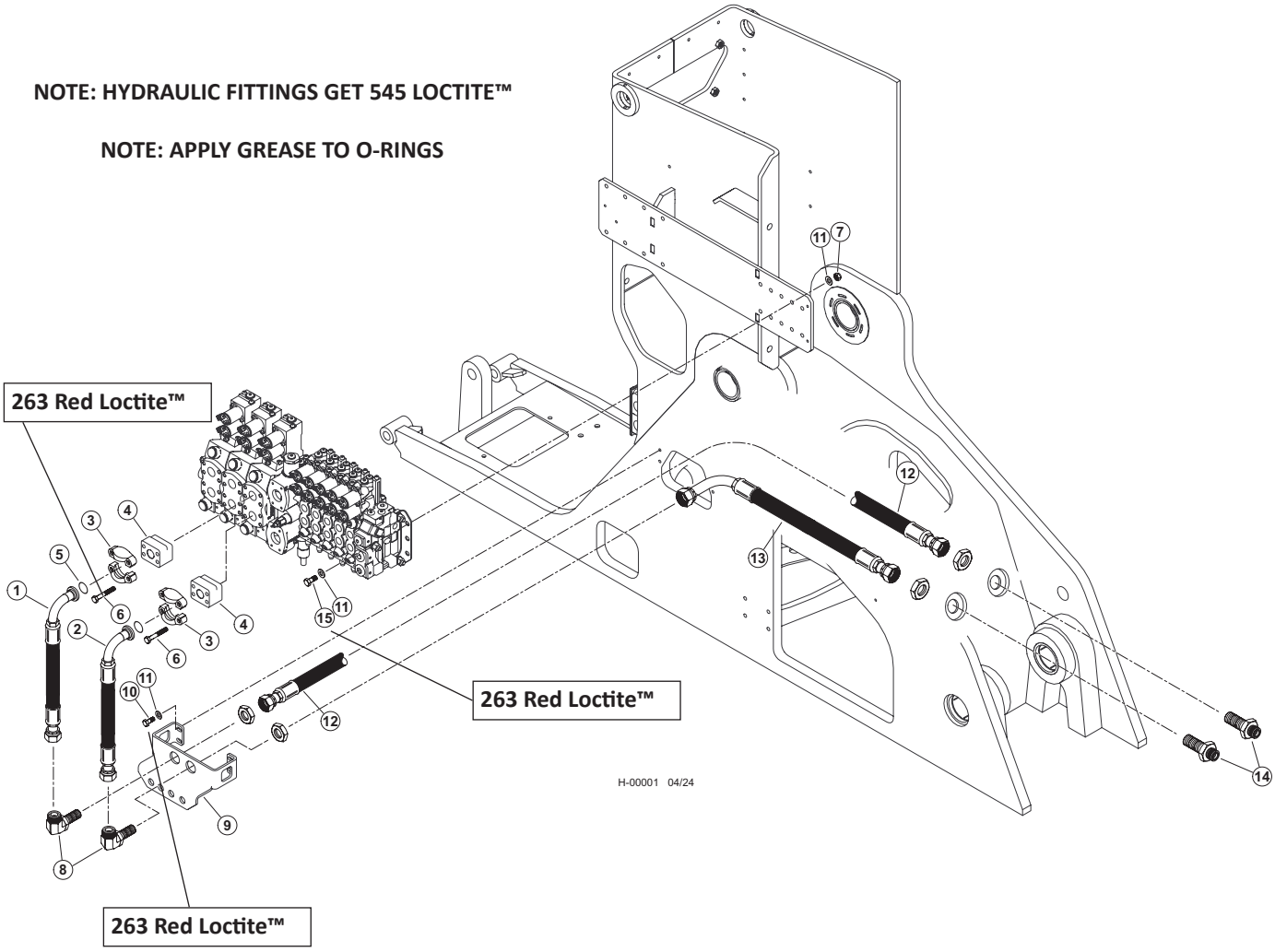


| Item | Part # | Description | Qty. |
|---|---|---|---|
| 1 | 59741 - (KIT) | HOSE ASSY - 787TC35.5 16-16OS-16PA9 - (BOOM “B”) | 1 |
| 2 | 59741 - (KIT) | HOSE ASSY - 787TC31 16-16OS-16PA9 - (BOOM “A”) | 1 |
| 3 | 15111 | KIT, SPLIT FLANGE CODE 61 1 INCH | 2 |
| 4 | 46248 | MANIFOLD, VALVE BLOCK SAE 1” CODE 62 | 2 |
| 5 | 15377 | O-RING - 1” SF | 2 |
| 6 | 55664 | BOLT, ALLEN HEAD - 10MM-1.5P X 80MM **263 RED LOCTITE™** | 8 |
| 7 | 10813 | NUT, LOCK - .375” | 4 |
| 8 | 53680 | FITTING, BULKHEAD UNION ELBOW 16 WELO-WN | 2 |
| 9 | 60559 | BULHEAD, FRONT - TM | 1 |
| 10 | 15542 | BOLT - .375” X .75” **263 RED LOCTITE™** | 4 |
| 11 | 15528 | WASHER, SAE FLAT - .375” | 12 |
| 12 | 57941 - (KIT) | HOSE ASSY - 787TC43 16-16OS-16OS<br>**(MAIN BOOM CYLINDER BASE END BULKHEAD TO BULKHEAD PLATE)** | 1 |
| 13 | 57941 - (KIT) | HOSE ASSY - 787TC30 16-16OS-16O9L<br>**(MAIN BOOM CYLINDER ROD END BULKHEAD TO BULKHEAD PLATE)** | 1 |
| 14 | 54316 | ELBOW, BULKHEAD UNION 45DEG #16 | 2 |
| 15 | 10402 | BOLT - .375” X 1.25” **263 RED LOCTITE™** | 4 |

# H200-00000 - MAIN BOOM CYLINDER PIPING - VALVE TO BULKHEAD(W450/W300 VALVE)

**NOTE: HYDRAULIC FITTINGS GET 545 LOCTITE™**

**NOTE: APPLY GREASE TO O-RINGS**

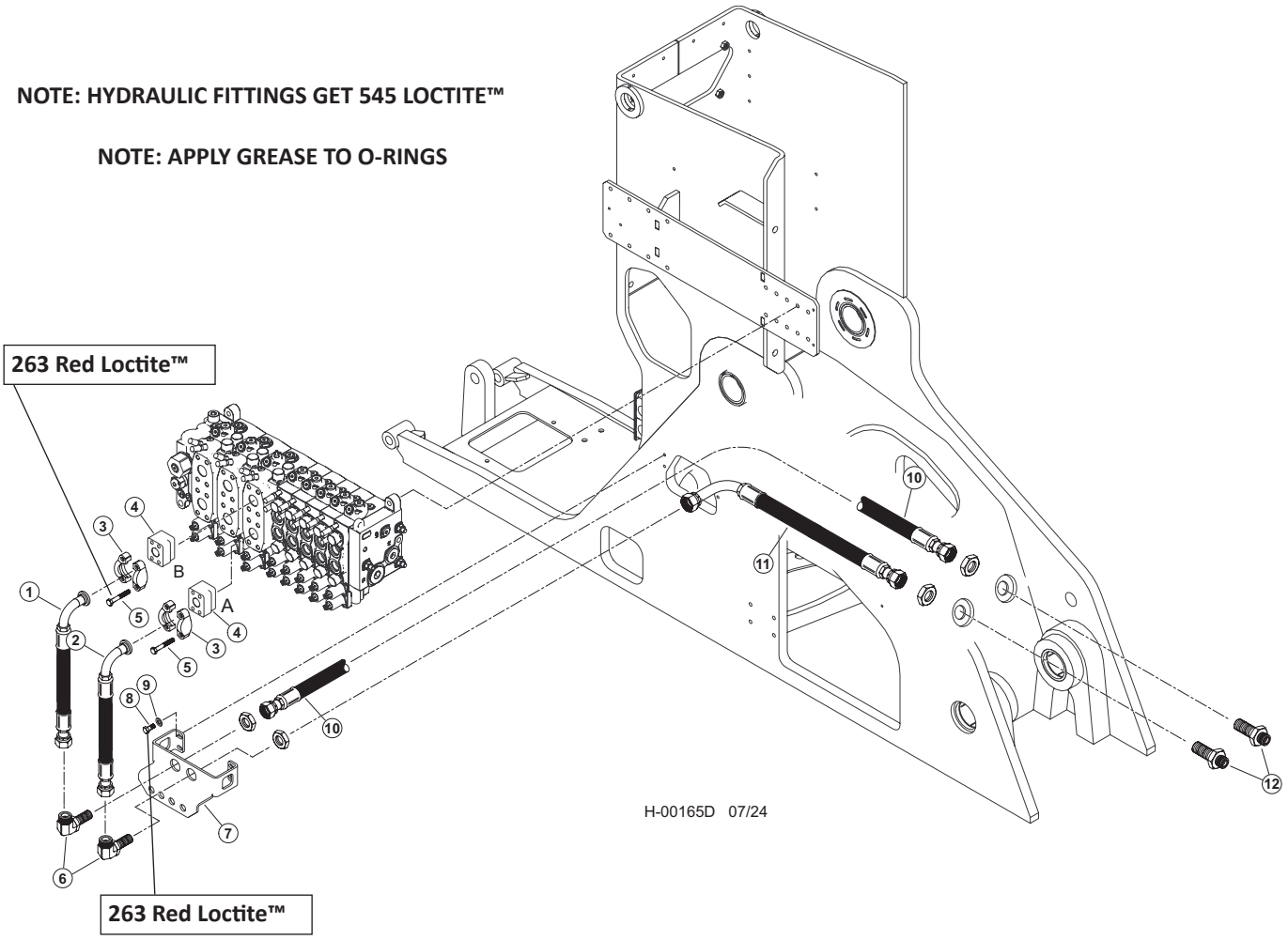


| Item | Part # | Description | Qty. |
|---|---|---|---|
| 1 | 65482 - (65799 - KIT) | HOSE, HYD, 787TC36 16-16OS-20PH9-SW - (BOOM “B”) | 1 |
| 2 | 65459 - (65799 - KIT) | HOSE, HYD, 787TC32 16-16OS-20PH9-SW - (BOOM “A”) | 1 |
| 3 | 15111 | KIT, SPLIT FLANGE CODE 61 1 INCH | 2 |
| 4 | 65458 | ANCHOR-ASX-20GP STANDOFF | 2 |
| 5 | 55664 | BOLT, ALLEN HEAD - 10MM-1.5P X 80MM **263 RED LOCTITE™** | 8 |
| 6 | 53680 | FITTING, BULKHEAD UNION ELBOW 16 WELO-WN | 4 |
| 7 | 60559 | BULHEAD, FRONT - TM | 2 |
| 8 | 10402 | BOLT - .375” X 1.25” **263 RED LOCTITE™** | 2 |
| 9 | 15528 | WASHER, SAE FLAT - .375” | 2 |
| 10 | 65803 - (65799 - KIT) | HOSE, HYD, 787TC43 16-16OS-16OS | 12 |
| | | **(MAIN BOOM CYLINDER BASE END BULKHEAD TO BULKHEAD PLATE)** | 1 |
| 11 | 65804 - (65799 - KIT) | HOSE, HYD, 787TC30 16-16OS-16O9L | |
| | | **(MAIN BOOM CYLINDER ROD END BULKHEAD TO BULKHEAD PLATE)** | 1 |
| 12 | 54316 | ELBOW, BULKHEAD UNION 45DEG #16 | |

# H100-00010 - HOC MANIFOLD & CASE MANIFOLD PIPING - (K220/L90 VALVE)

**NOTE: HYDRAULIC FITTINGS GET 545 LOCTITE™**

**NOTE: APPLY GREASE TO O-RINGS**

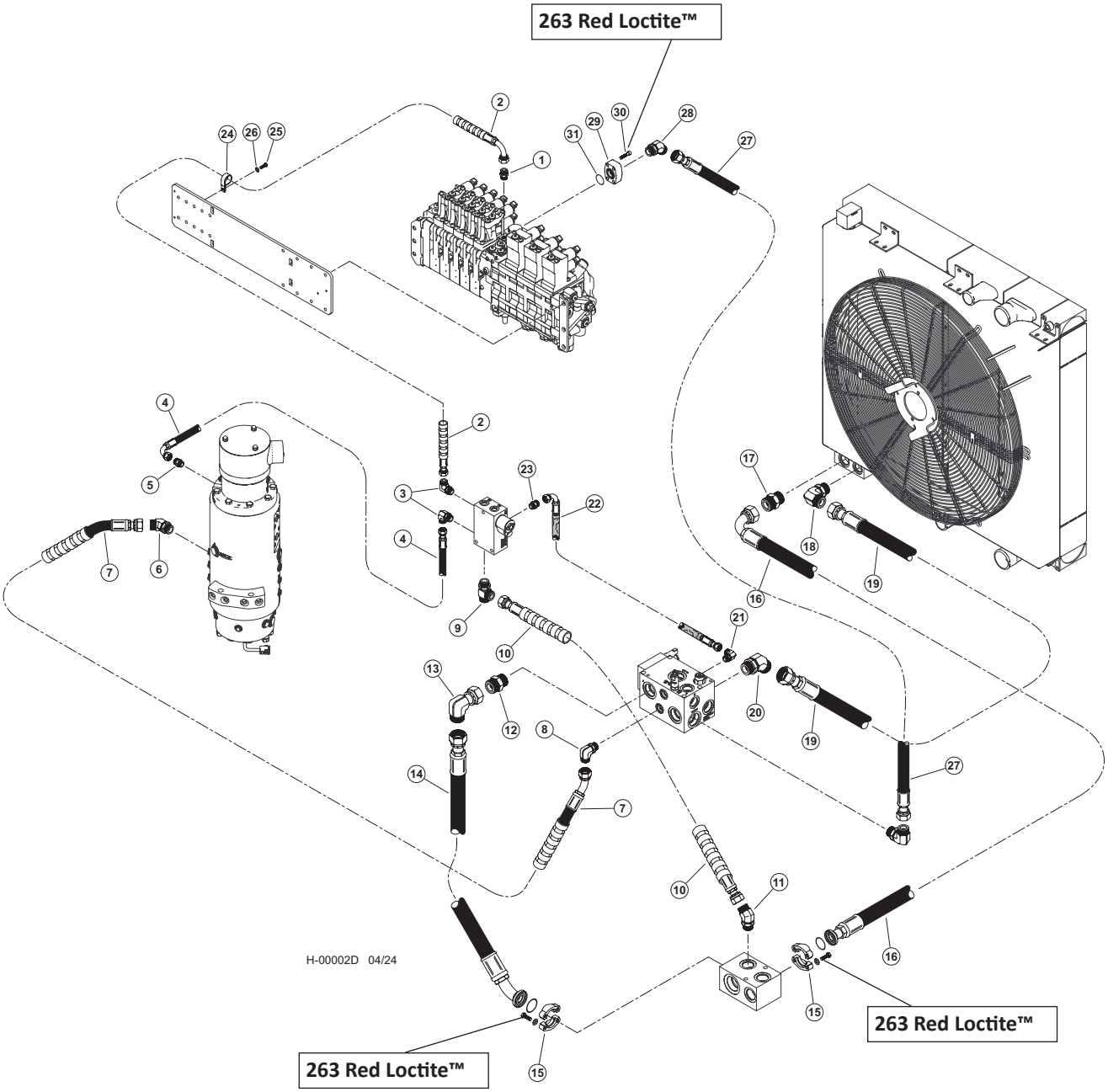

## H100-00010 - HOC MANIFOLD & CASE MANIFOLD PIPING - (K220/L90 VALVE)

| Item | Part # | Description | Qty. |
|---|---|---|---|
| 1 | 18034 | CONNECTOR, STR - FF1852T-0606S | 1 |
| 2 | 57941 - (KIT) | HOSE ASSY - 387TC43 06-06OS-0609-SW | 1 |
| | | **(MAIN VALVE CASE DRAIN TO CASE MANIFOLD)** | |
| 3 | 16296 | ELBOW, 90 - FF1868T-0606S | 2 |
| 4 | 57941 - (KIT) | HOSE ASSY - 387TC27 06-06OS-06J9 | 1 |
| | | **(ROTARY MANIFOLD TO BR CASE MANIFOLD)** | |
| 5 | 15487 | CONNECTOR, STR - 6400-6-4 | 1 |
| 6 | 19127 | ELBOW, 45 - FF2068T-1212S | 1 |
| 7 | 57941 - (KIT) | HOSE ASSY - 187TC30 12-12OS-12O4-SW | 1 |
| | | **(ROTARY MANIFOLD TO HOC MANIFOLD)** | |
| 8 | 19128 | ELBOW, 90 - FF1868T-1216S | 1 |
| 9 | 55379 | FITTING, STRAIGHT - 16 R5OX-S | 1 |
| 10 | 57941 - (KIT) | HOSE ASSY - 187TC43-16-16JS-16JS-SW | 1 |
| | | **(RETURN MANIFOLD TO CASE MANIFOLD)** | |
| 11 | 15473 | ELBOW, 45 - 6802-16 | 1 |
| 12 | 22319 | CONNECTOR, STR 24F5OX-S THRML B-PASS GT | 1 |
| 13 | 54714 | ELBOW, 90 SWIVEL 24C6X-S (24 JICMF) | 1 |
| 14 | 57941 - (KIT) | HOSE ASSY - 187TC15-24-24JS-24PA4 | 1 |
| | | **(HOC BYPASS MANIFOD TO RETURN MANIFOLD)** | |
| 15 | 15186 | KIT, SPLIT FLANGE - 1.5” (CODE 61) **263 RED LOCTITE™** | 2 |
| 16 | 57941 - (KIT) | HOSE ASSY - 187TC51-24-2409-24PA | 1 |
| | | **(OIL COOLER RETURN TO RETURN MANIFOLD)** | |
| 17 | 22448 | CONNECTOR, STR - 848-TTO-24X24 | 1 |
| 18 | 59007 | FITTING, 24-C5OLO-S | 1 |
| 19 | 57941 - (KIT) | HOSE ASSY - 187TC30.5-24-240S-24OS | 1 |
| | | **(COOLER RETURN TO HOC MANIFOLD)** | |
| 20 | 24257 | ELBOW, 45 - FF2068T-2424S | 1 |
| 21 | 20031 | ELBOW, 90 - 6-8 C5OLO-S | 1 |
| 22 | 57941 - (KIT) | HOSE ASSY - 387TC41 06-06OS-0609-W | 1 |
| | | **(CASE MANIFOLD TO HOC MANIFOLD)** | |
| 23 | 22901 | CONNECTOR, STR - 6-8 F5OLO-S | 1 |
| 24 | 16119 | CLAMP, HOSE - COATED STRAP - 1” | 1 |
| 25 | 15605 | BOLT - .3125” X .75” | 1 |
| 26 | 15559 | WASHER, SAE FLAT - .3125” | 1 |
| 27 | 57941 - (KIT) | HOSE ASSY - 187TC43 20-20JS-06JS **(VALVE RETURN TO HOC MANIFOLD)** | 1 |
| 28 | 15473 | ELBOW, 45 - 6802-16 | 1 |
| 29 | 18397 | CONNECTOR, FLANGE PAD - W48-16-16U(C 62) | 1 |
| 30 | 20444 | BOLT, ALLEN HEAD - 10MMX1.5 **263 RED LOCTITE™** | 4 |
| 31 | 15378 | O-RING - 1.25” SF (CODE 61/62) | 1 |

# H200-00010 - HOC MANIFOLD & CASE MANIFOLD PIPING - (WS450/WS300 VALVE)

**NOTE: HYDRAULIC FITTINGS GET 545 LOCTITE™**

**NOTE: APPLY GREASE TO O-RINGS**

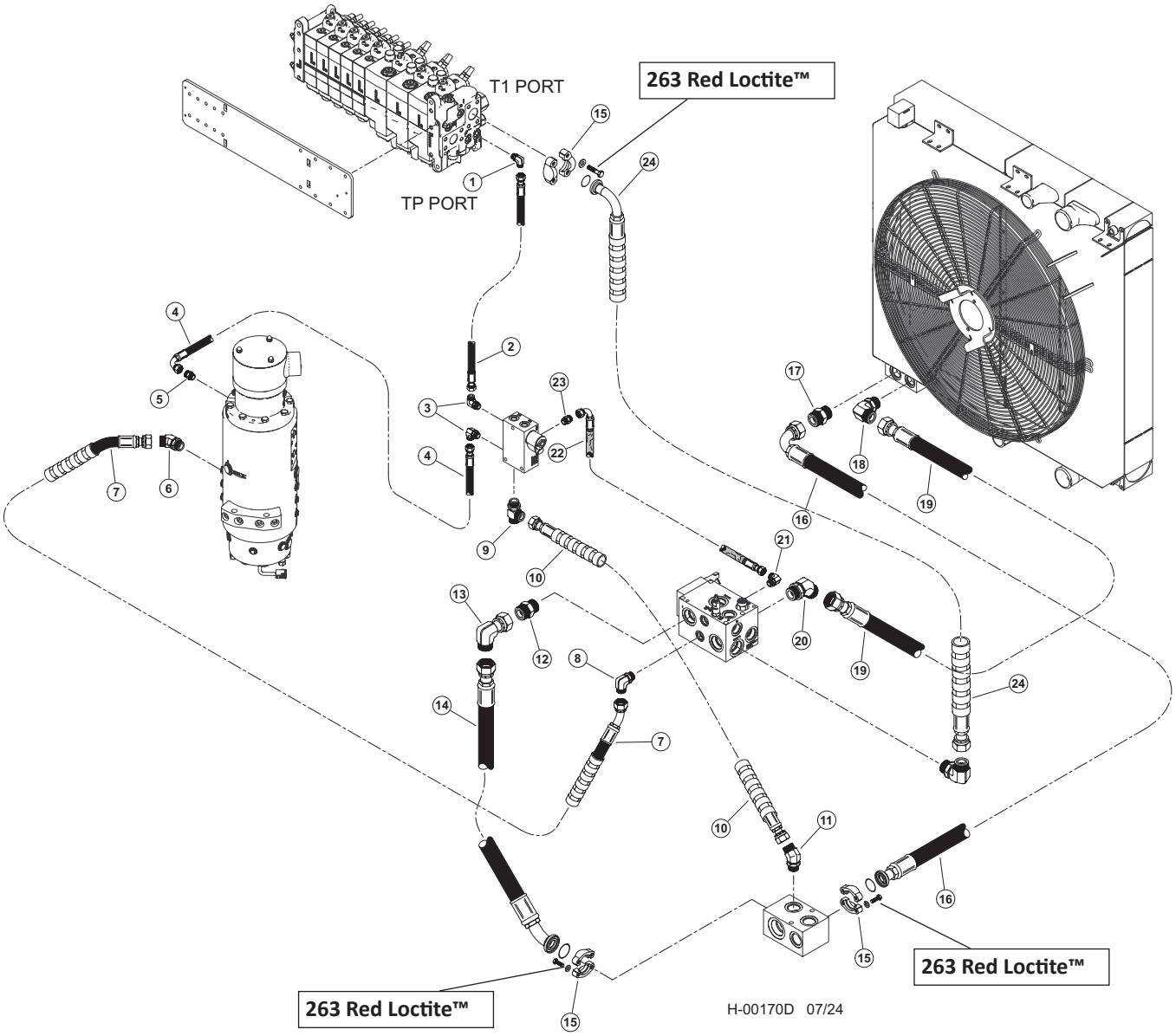

# H200-00010 - HOC MANIFOLD & CASE MANIFOLD PIPING - (WS450/WS300 VALVE)

| Item | Part # | Description | Qty. |
|---|---|---|---|
| 1 | 16360 - (KIT - 65975) | ELBOW, 90 - FF1868T-0808S | 1 |
| 2 | 65816 - (KIT - 65812) | HOSE, HYD, 187TC38 08-08OS-08OS | 1 |
| | | **(MAIN VALVE CASE DRAIN TO CASE MANIFOLD)** | |
| 3 | 16296 | ELBOW, 90 - FF1868T-0606S | 2 |
| 4 | 65794 - (65792 -KIT) | HOSE, HYD, 387TC27 06-06OS-06J9 | 1 |
| | | **(ROTARY MANIFOLD TO BR CASE MANIFOLD)** | |
| 5 | 15487 | CONNECTOR, STR - 6400-6-4 | 1 |
| 6 | 19127 | ELBOW, 45 - FF2068T-1212S | 1 |
| 7 | 65789 - (65792 - (KIT) | HOSE, HYD, 187TC30 12-12OS-12O4-SW | 1 |
| | | **(ROTARY MANIFOLD TO HOC MANIFOLD)** | |
| 8 | 19128 | ELBOW, 90 - FF1868T-1216S | 1 |
| 9 | 55379 | FITTING, STRAIGHT - 16 R5OX-S | 1 |
| 10 | 65790 - (65787 - (KIT) | HOSE, HYD, 187TC43 16-16JS-16JS-SW | 1 |
| | | **(RETURN MANIFOLD TO CASE MANIFOLD)** | |
| 11 | 15473 | ELBOW, 45 - 6802-16 | 1 |
| 12 | 22319 | CONNECTOR, STR 24F5OX-S THRML B-PASS GT | 1 |
| 13 | 54714 | ELBOW, 90 SWIVEL 24C6X-S (24 JICMF) | 1 |
| 14 | 65788 - (65787 - (KIT) | HOSE, HYD, 187TC15 24-24JS-24PA4 | 1 |
| | | **(HOC BYPASS MANIFOD TO RETURN MANIFOLD)** | |
| 15 | 15186 | KIT, SPLIT FLANGE - 1.5” (CODE 61) **263 RED LOCTITE™** | 3 |
| 16 | 65791 - (65787 - (KIT) | HOSE, HYD, 187TC51 24-24O9-24PA | 1 |
| | | **(OIL COOLER RETURN TO RETURN MANIFOLD)** | |
| 17 | 22448 | CONNECTOR, STR - 848-TTO-24X24 | 1 |
| 18 | 59007 | FITTING, 24-C5OLO-S | 1 |
| 19 | 65828 - (65787 - (KIT) | HOSE, HYD, 187TC30.5 24-24OS-24OS | 1 |
| | | **(COOLER RETURN TO HOC MANIFOLD)** | |
| 20 | 24257 | ELBOW, 45 - FF2068T-2424S | 1 |
| 21 | 20031 | ELBOW, 90 - 6-8 C5OLO-S | 1 |
| 22 | 65829 - (65787 - (KIT) | HOSE, HYD, 387TC41 06-06OS-06O9-W | 1 |
| | | **(CASE MANIFOLD TO HOC MANIFOLD)** | |
| 23 | 22901 | CONNECTOR, STR - 6-8 F5OLO-S | 1 |
| 24 | 65815 - (KIT - 65812) | HOSE, HYD, 187TC39 24-24JS-24PA9-SW | 1 |

# H100-00020 - IMPLEMENT PUMP & SWING PUMP PIPING - COMMON

**NOTE: HYDRAULIC FITTINGS GET 545 LOCTITE™**

**NOTE: APPLY GREASE TO O-RINGS**

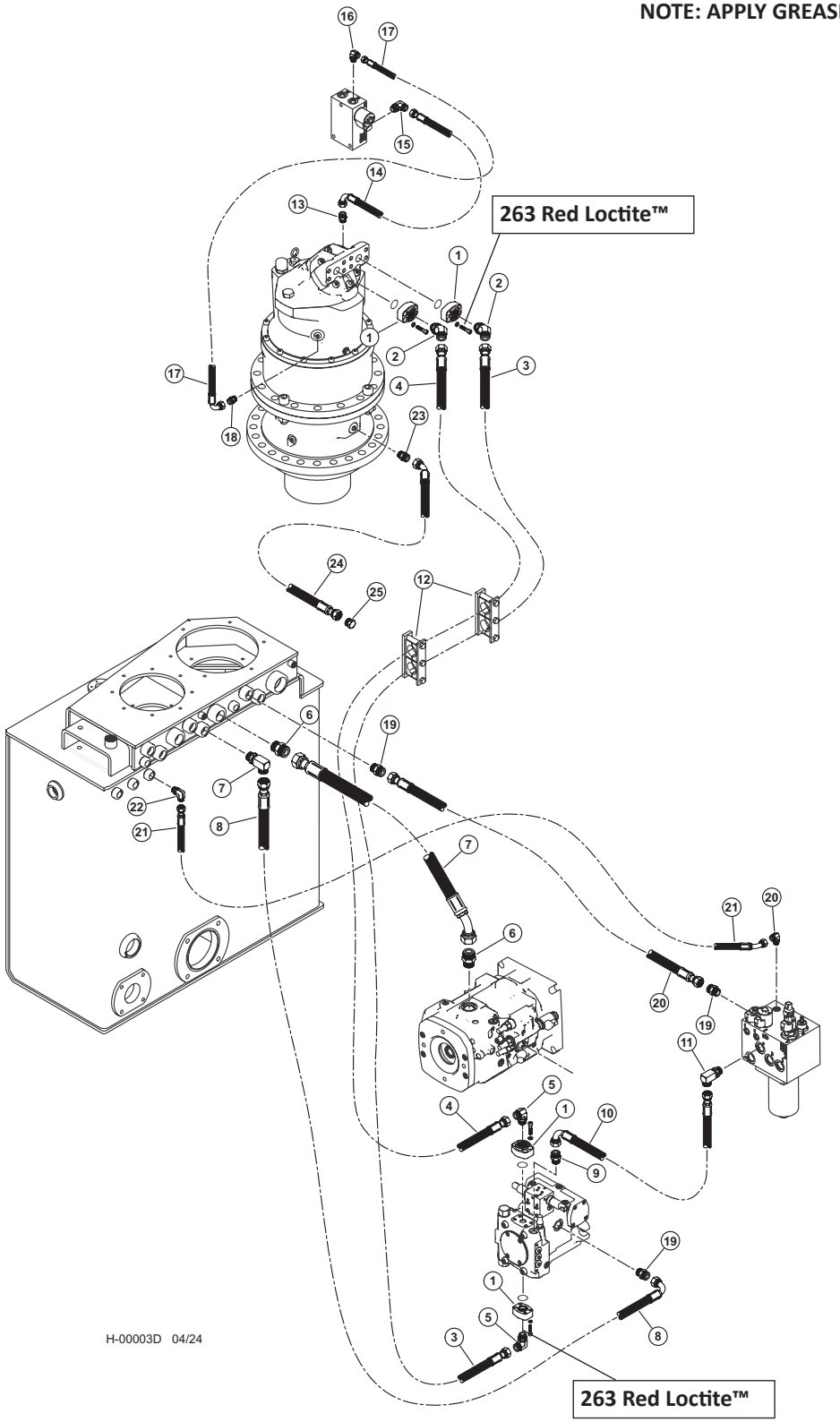

# H100-00020 - IMPLEMENT PUMP & SWING PUMP PIPING - COMMON

| Item | Part # | Description | Qty. |
|---|---|---|---|
| 1 | 19808 | CONNECTOR, FLANGE PAD -FP62-12-12ORB-MK **263 RED LOCTITE™** | 4 |
| 2 | 19127 | ELBOW, 45 - FF2068T-1212S | 2 |
| 3 | 65807 - | HOSE ASSY - 797TC85 12-12OS-12O9 | 1 |
| | (65805/65808 - (KIT) | **(SWING MOTOR TO PUMP)** | |
| 4 | 65806 - | HOSE ASSY - 797TC81 12-12OS-12O9 | 1 |
| | (65805/65808 - (KIT) | **(SWING MOTOR TO PUMP)** | |
| 5 | 17688 | ELBOW, 90 - FF1868T-1212S | 2 |
| 6 | 15225 | CONNECTOR, STR - FF1852T-1616S | 1 |
| 7 | 65819 - (65952 - (KIT) | HOSE, HYD, 187TC20.5 16-16OS-16O4 | 1 |
| | | **(IMPLEMENT PUMP CASE DRAIN TO HYD TANK)** | |
| 8 | 65821 - (65952 - (KIT) | HOSE, HYD, 187TC42 12-12OS-12O9 | 1 |
| | | **(SWING PUMP CASE TO HYD TANK)** | |
| 9 | 15117 | CONNECTOR, STR - FF1852T-0808S | 1 |
| 10 | 65946 - (65868 - (KIT) | HOSE, HYD, 187TC31 08-08OS-08O9 | 1 |
| | | **(CHARGE MANIFOLD TO SWING PUMP)** | |
| 11 | 57445 | FITTING, 8 CC5OLO-S | 1 |
| 12 | 58050 | CLAMP, VERMATIC (15-SB-2-R-1.25) DUAL | 2 |
| 13 | 52439 | CONNECTOR, MALE ISO 6149 | 1 |
| 14 | 65953 - (65808 - (KIT) | HOSE, HYD, 187TC36 08-08OS-08O9 | 1 |
| | | **(SWING MOTOR CASE TO CASE MANIFOLD)** | |
| 15 | 16360 | ELBOW, 90 - FF1868T-0808S | 1 |
| 16 | 15133 | ELBOW, 90 - FF1868T-0406S | 1 |
| 17 | 65954 - (65808 - (KIT) | HOSE, HYD, 387TC29 04-04OS-04O9 | 1 |
| | | **(SWING BRAKE TO CASE MANIFOLD)** | |
| 18 | 19469 | CONNECTOR, STR METRIC - 4M12F82EDMLO-S | 1 |
| 19 | 15152 | CONNECTOR, STR - FF1852T-1212S | 2 |
| 20 | 65823 - (65952 - KIT) | HOSE, HYD, 187TC26.5 12-12OS-12OS **(CHARGE MANIFOLD T3 TO TANK)** | 1 |
| 21 | 65824 - (65952 - (KIT) | HOSE, HYD, 387TC55 06-06OS-06O4 | 1 |
| | | **(CHARGE MANIFOLD DRAIN TO HYD TANK)** | |
| 22 | 20031 | ELBOW, 90 - 6-8 C5OLO-S | 1 |
| 23 | 24182 | CONNECTOR, STR - 6002-08-8BSPP | 1 |
| 24 | 65810 - | HOSE ASSY - 187TC28 08-08OS-08O4 | 1 |
| | (65805/65808 - (KIT) | **(SWING MOTOR DRAIN)** | |
| 25 | 16032 | PLUG - FF9767-08S | 1 |

# H100-00030 - IMPLEMENT PUMP PRESSURE & LOAD SENSE PIPING - (K220/L90 VALVE)

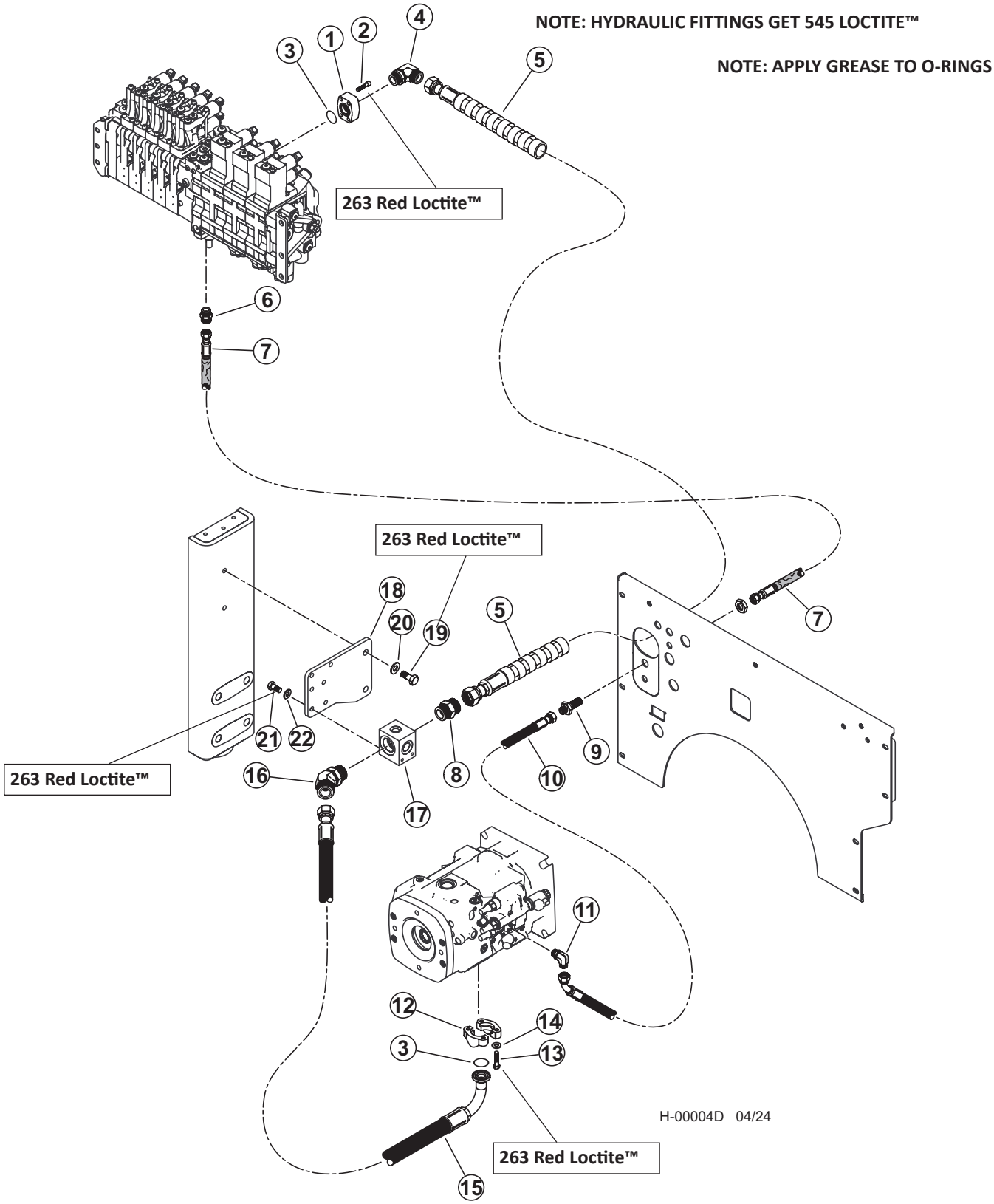

## H100-00030 - IMPLEMENT PUMP PRESSURE & LOAD SENSE PIPING - (K220/L90 VALVE)

| Item | Part # | Description | Qty. |
|---|---|---|---|
| 1 | 18397 | CONNECTOR, FLANGE PAD - W48-16-16U(C 62) | 1 |
| 2 | 18988 | BOLT, ALLEN HEAD - 12MM-1.75P X 45MM **263 RED LOCTITE™** | 4 |
| 3 | 15378 | O-RING - 1.25” SF (CODE 61/62) | 2 |
| 4 | 21143 | ELBOW, 90 - 20-16 C5OLO-S | 1 |
| 5 | 57941 - (KIT) | HOSE ASSY - 787TC65 20-20OS-20OS-W | 1 |
| | | **(IMP PUMP PRESSURE - BH TO MAIN VALVE)** | |
| 6 | 18034 | CONNECTOR, STR - FF1852T-0606S | 1 |
| 7 | 57941 - (KIT) | HOSE ASSY - 787TC68 06-06OS-06OS-W | 1 |
| | | **(LOAD SENSE - BH TO MAIN VALVE)** | |
| 8 | 17344 | CONNECTOR, STR - FF1852T-2020S | 1 |
| 9 | 50420 | CONNECTOR, STR BULKHEAD - 832-TT-06 | 1 |
| 10 | 57941 - (KIT) | HOSE ASSY - 787TC37 06-06OS-06O4 | 1 |
| | | **(LOAD SENSE - IMPLEMENT PUMP TO BULKHEAD)** | |
| 11 | 16296 | ELBOW, 90 - FF1868T-0606S | 1 |
| 12 | 15114 | KIT, SPLIT FLANGE - 1.25” (CODE 62) | 1 |
| 13 | 10736 | BOLT - .5” X 2” **263 RED LOCTITE™** | 4 |
| 14 | 10710 | WASHER, LOCK - .5” | 4 |
| 15 | 58027 | HOSE, HYD, IMP PRESS 40/D-SERIES | 1 |
| 16 | 17056 | ELBOW, 45 - FF2068T-2020S | 1 |
| 17 | 51450 | MANIFOLD, RETURN CHECK - TF820 | 1 |
| 18 | 60444 | MOUNT, MANIFOLD | 1 |
| 19 | 50100 | BOLT - .5” X 1.25” **263 RED LOCTITE™** | 2 |
| 20 | 15534 | WASHER, SAE FLAT - .5” | 2 |
| 21 | 11707 | BOLT - .375” X 1” **263 RED LOCTITE™** | 2 |
| 22 | 15528 | WASHER, SAE FLAT - .375” | 2 |

# H200-00020 - IMPLEMENT PUMP PRESSURE & LOAD SENSE PIPING (WS450/WS300 VALVE)

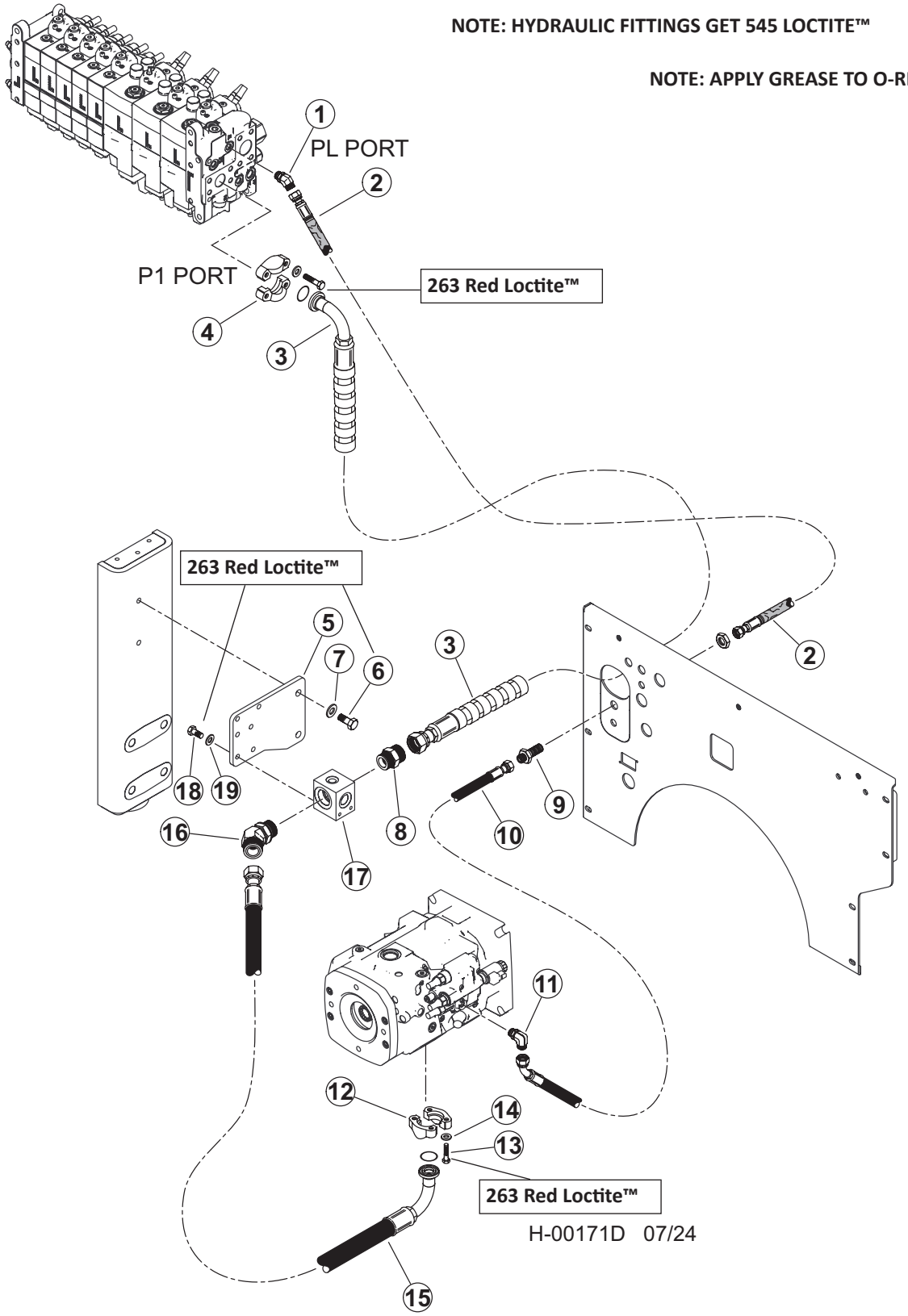

# H200-00020 - IMPLEMENT PUMP PRESSURE & LOAD SENSE PIPING (WS450/WS300 VALVE)

| Item | Part # | Description | Qty. |
|---|---|---|---|
| 1 | 23015 | ELBOW, 45 - 6 V5OLO-S | 1 |
| 2 | 65940 - (KIT - 65868) | HOSE, HYD, 787TC68 06-06OS-06OS-W **(IMP PUMP LOAD SENSE)** | 1 |
| 3 | 65455 - (KIT - 65454) | HOSE, HYD, 787TC67 20-20OS-20PH9-SW **(IMP PUMP PRESSURE TO VALVE)** | 1 |
| 4 | 65457 | 20SFXO & M12 SPLIT FLANGE (CODE 62) **263 RED LOCTITE™** | 1 |
| 5 | 60444 | MOUNT, MANIFOLD | 1 |
| 6 | 50100 | BOLT - .5" X 1.25" **263 RED LOCTITE™** | 2 |
| 7 | 15534 | WASHER, SAE FLAT - .5" | 2 |
| 8 | 17344 | CONNECTOR, STR - FF1852T-2020S | 1 |
| 9 | 50420 | CONNECTOR, STR BULKHEAD - 832-TT-06 | 1 |
| 10 | 65939 - (65868 - KIT) | HOSE, HYD, 787TC37 06-06OS-06O4 **(LOAD SENSE - IMPLEMENT PUMP TO BULKHEAD)** | 1 |
| 11 | 16296 | ELBOW, 90 - FF1868T-0606S | 1 |
| 12 | 15114 | KIT, SPLIT FLANGE - 1.25" (CODE 62) | 1 |
| 13 | 10736 | BOLT - .5" X 2" **263 RED LOCTITE™** | 4 |
| 14 | 10710 | WASHER, LOCK - .5" | 4 |
| 15 | 58027 - (65868 - KIT) | HOSE, HYD, IMP PRESS 40/D-SERIES **(IMPLEMENT PUMP PRESSURE)** | |
| 16 | 17056 | ELBOW, 45 - FF2068T-2020S | 1 |
| 17 | 51450 | MANIFOLD, RETURN CHECK | 1 |
| 18 | 11707 | BOLT - .375" X 1" **263 RED LOCTITE™** | 2 |
| 19 | 15528 | WASHER, SAE FLAT - .375" | 2 |

# H100-00040 - DRIVE PUMP UPPER PIPING - (COMMON)

**NOTE: HYDRAULIC FITTINGS GET 545 LOCTITE™**

**NOTE: APPLY GREASE TO O-RINGS**

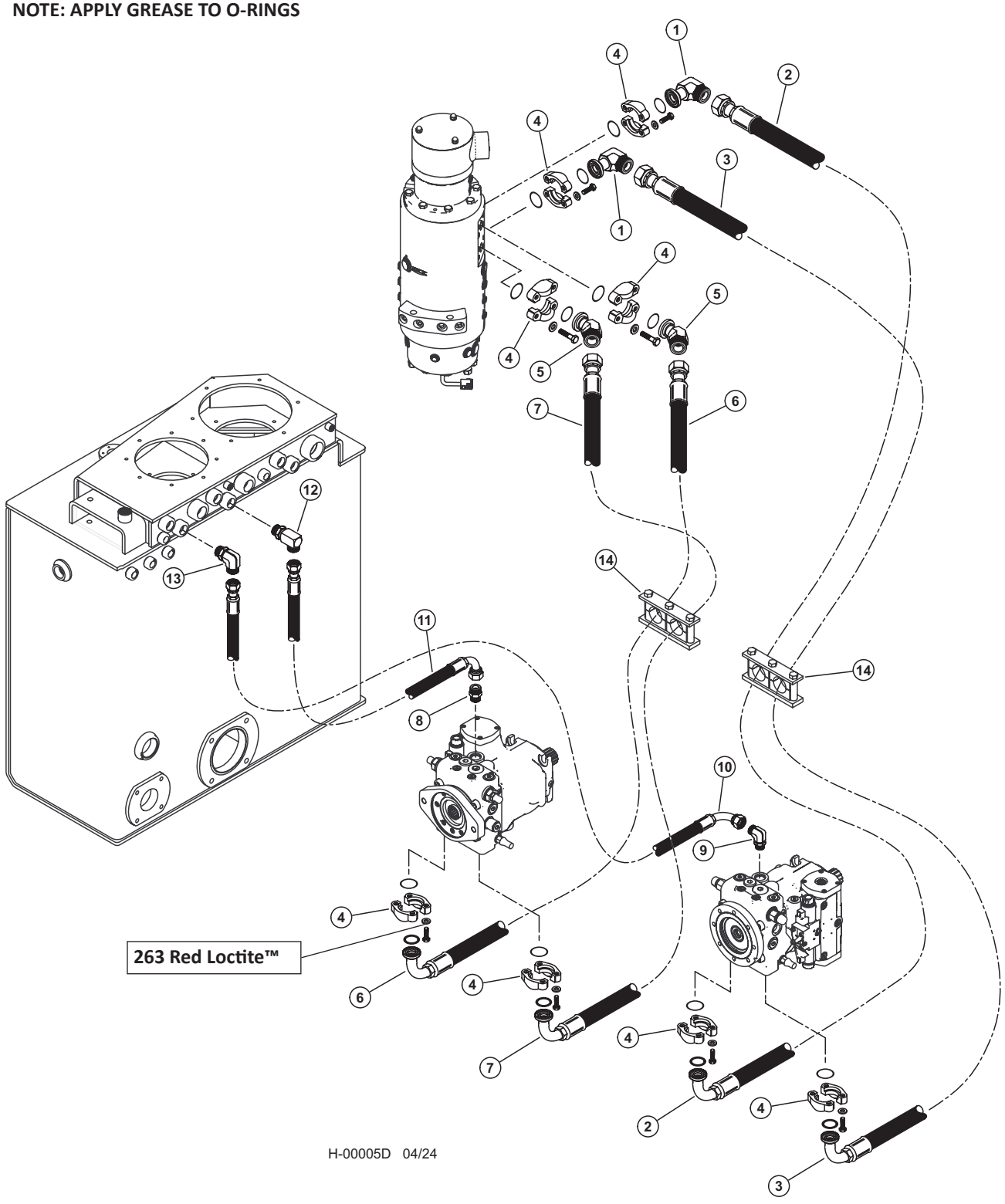


H-00005D 04/24

# H100-00040 - DRIVE PUMP UPPER PIPING - (COMMON)

| Item | Part # | Description | Qty. |
|---|---|---|---|
| 1 | 20030 | ADAPTER, 90 FLANGE - 16 LOEQ2-S (C62) | 2 |
| 2 | 65785 - (65782 - KIT) | HOSE, HYD, 797TC74 16-16OS-16PH9 | 1 |
| | | **(#10 PORT ON RM TO RIGHT DRIVE - R)** | |
| 3 | 65786 - (65782 - KIT) | HOSE, HYD, 797TC76 16-16OS-16PH9 | 1 |
| | | **(#12 PORT ON RM TO RIGHT DRIVE - L)** | |
| 4 | 15113 | KIT, SPLIT FLANGE - 1” (CODE 62) **263 RED LOCTITE™** | 8 |
| 5 | 57459 | ADAPTOR, FLANGE 45DEG ORFS CODE 62 | 2 |
| 6 | 65783 - (65782 - KIT) | HOSE, HYD, 797TC58 16-16OS-16PH9 | 1 |
| | | **(#11 PORT ON RM TO LEFT DRIVE - L)** | |
| 7 | 65784 - (65782 - KIT) | HOSE, HYD, 797TC60 16-16OS-16PH9 | 1 |
| | | **(#9 PORT ON RM TO LEFT DRIVE - R)** | |
| 8 | 15152 | CONNECTOR, STR - FF1852T-1212S | 1 |
| 9 | 17688 | ELBOW, 90 - FF1868T-1212S | 1 |
| 10 | 65822 - (65952 - KIT) | HOSE, HYD, 187TC51.5 12-12OS-12O9 | 1 |
| | | **(RIGHT DRIVE PUMP CASE DRAIN TO HYD TANK)** | |
| 11 | 65820 - (65852 - KIT) | HOSE, HYD, 187TC33 12-12OS-12O9 | 1 |
| | | **(LEFT DRIVE PUMP CASE DRAIN TO HYD TANK)** | |
| 12 | 57444 | FITTING, 12 CC5OLO-S | 1 |
| 13 | 11306 | ELBOW, 90 12 C5OX-S | 1 |
| 14 | 12270 | CLAMP, VERMATIC (15-SB-2-R-1.5) DUAL | 2 |

# H100-00050 - TRACK DRIVE BRAKE, SHIFT & CASE DRAIN UPPER PIPING - (COMMON)

**NOTE: HYDRAULIC FITTINGS GET 545 LOCTITE™**

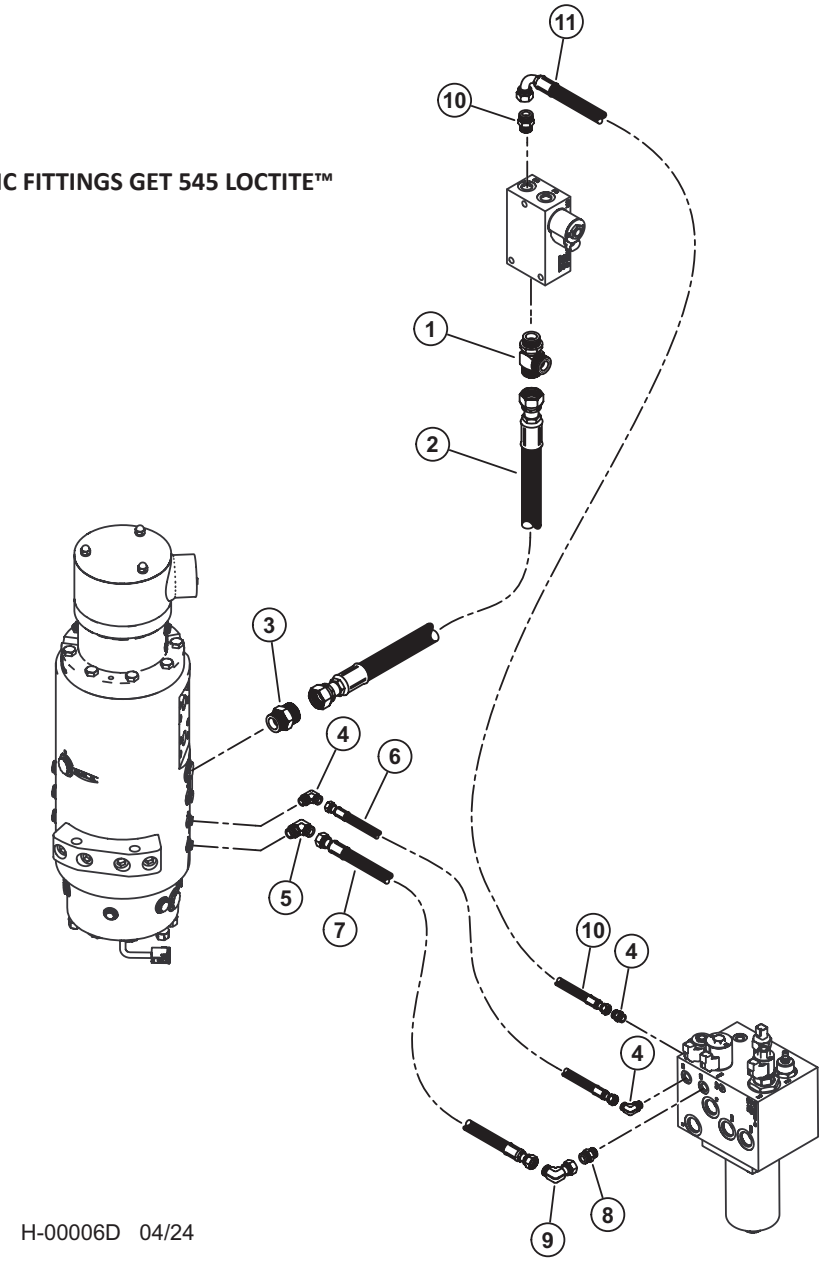


H-00006D 04/24

| Item | Part # | Description | Qty. |
|---|---|---|---|
| 1 | 55379 | FITTING, STRAIGHT - 16 R5OX-S | 1 |
| 2 | 65793 - (65792 - KIT) | HOSE, HYD, 187TC18 16-16JS-16J4 | 1 |
| | | **(CASE MANIFOLD TO ROTARY MANIFOLD)** | |
| 3 | 15496 | CONNECTOR, STR - 6400-16-12 | 1 |
| 4 | 15133 | ELBOW, 90 - FF1868T-0406S | 2 |
| 5 | 16296 | ELBOW, 90 - FF1868T-0606S | 1 |
| 6 | 65795 - (65792 - KIT) | HOSE, HYD, 387TC90 04-04OS-04OS-W | 1 |
| | | **(CHARGE MANIFOLD MOTOR SHIFT PORT TO ROTARY MANIFOLD)** | |
| 7 | 65796 - (65792 - KIT) | HOSE, HYD, 387TC91 06-06OS-06OS-W | 1 |
| | | **(CHARGE MANIFOLD PARKING BRAKE PORT TO ROTARY MANIFOLD)** | |
| 8 | 18034 | CONNECTOR, STR - FF1852T-0606S | 1 |
| 9 | 20035 | ELBOW, 90 SWIVEL - 6 C6LO-S | 1 |
| 10 | 65827 - (65952 - KIT) | HOSE, HYD, 387TC109 04-04OS-04O9 | 1 |
| | | **(CHARGE MANIFOLD TO BRAKE SOLENOID)** | |

# H100-00060 - COOLING FAN MOTOR PIPING - (COMMON)

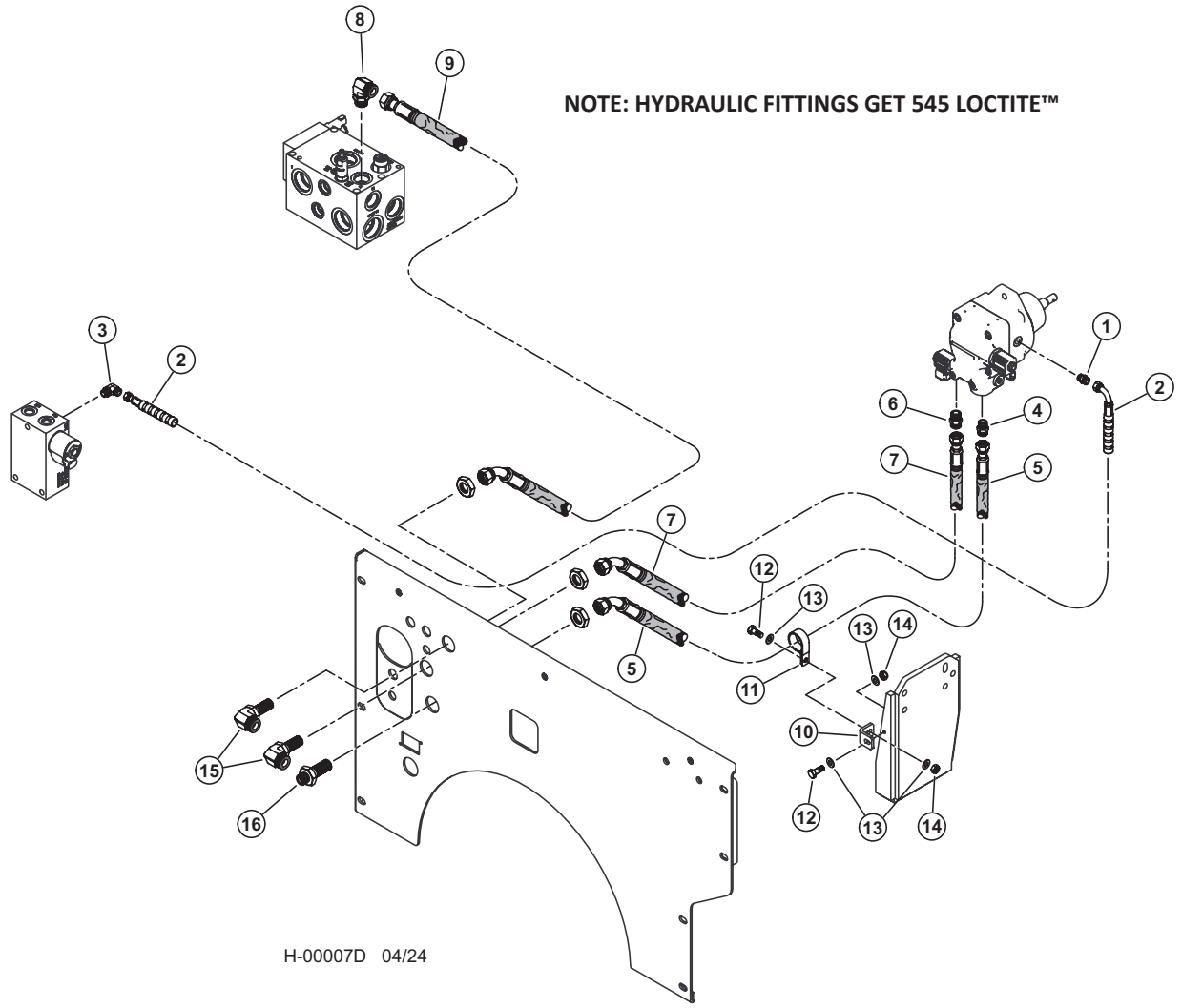


| Item | Part # | Description | Qty. |
|---|---|---|---|
| 1 | 55379 | CONNECTOR, STR - FF1852T-0606S | 1 |
| 2 | 65830 - (65787 - KIT) | HOSE, HYD, 387TC42 06-06OS-06O9-SW | 1 |
| | | **(FAN MOTOR CASE TO CASE MANIFOLD)** | |
| 3 | 20031 | ELBOW, 90 - 6-8 C5OLO-S | 1 |
| 4 | 15152 | CONNECTOR, STR - FF1852T-1212S | 1 |
| 5 | 65937 - (65787 - KIT) | HOSE, HYD, 487TC69 12-12OS-12J4-W | 1 |
| | | **(FAN MOTOR PRESSURE - CHARGE BH TO FAN MOTOR)** | |
| 6 | 15495 | CONNECTOR, STR - 12-16 F5OX-S | 1 |
| 7 | 65936 - (65787 - KIT) | HOSE, HYD, 187TC72 12-12JS-12J4-W | 1 |
| | | **(FAN MOTOR RETURN - CHARGE BH TO FAN MOTOR)** | |
| 8 | 19128 | ELBOW, 90 - FF1868T-1216S | 1 |
| 9 | 65935 - (65787 - KIT) | HOSE, HYD, 187TC40 12-12OS-12J4-SW | 1 |
| | | **(T CHARGE BH TO HOC BYPASS MANIFOLD)** | |
| 10 | 46421 | BRACKET, COOLER LINE SUPPORT | 1 |
| 11 | 59105 | CABLE CLAMP, CUSHIONED, 1_1/2" DIA | 1 |
| 12 | 18309 | BOLT - .25" X 1.25" | 2 |
| 13 | 10757 | WASHER, SAE FLAT - .25" | 4 |
| 14 | 10811 | NUT, LOCK - .25" | 2 |
| 15 | 54704 | ELBOW, 90 BULK 12 WETX-WLN-S | 2 |
| 16 | 17009 | CONNECTOR, STR BULKHEAD - 2700-12 | 1 |

# H100-00070 - HYDRAULIC TANK SURGE TANK INSTALLATION AND PIPING - (COMMON)

**NOTE: HYDRAULIC FITTINGS GET 545 LOCTITE™**

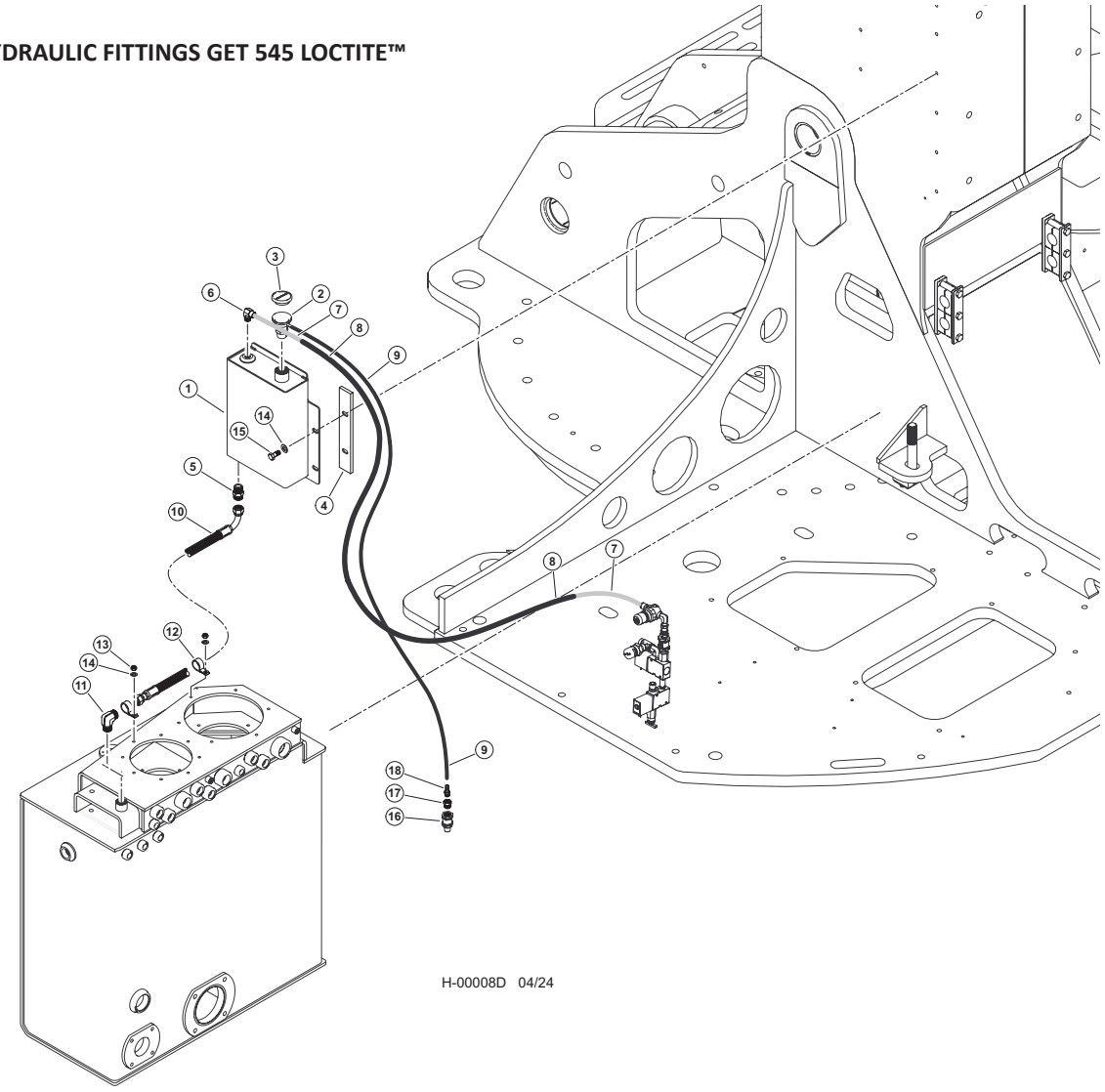


| Item | Part # | Description | Qty. |
|---|---|---|---|
| 1 | 60720 | TANK, OVERFLOW | 1 |
| 2 | 17156 | STEM, HYDRAULIC TANK RELIEF CAP | 1 |
| 3 | 18135 | CAP, HYD. RESERVOIR RELIEF - 13 PSI | 1 |
| 4 | 60741 | BAR, MOUNTING - RUBBER | 2 |
| 5 | 15201 | CONNECTOR, STR - FF2031T-1212S | 1 |
| 6 | 51739 | CONNECTOR, ELBOW -PUSH ON (VACUUM) (1/4" | 1 |
| 7 | 51738 | HOSE, VACUUM PUMP 3/8” PUSH ON | 8’ |
| 8 | 17450 | SPLIT LOOM - .3875” BULK | 8’ |
| 9 | 16238 | HOSE, FUEL LINE (BULK ROLL) - .3125” | 5’ |
| 10 | 65818 - (65817 - KIT) | HOSE, HYD, 187TC41 12-12FJ-12O9 **(HYDRAULIC TANK OVERFLOW)** | 1 |
| 11 | 58210 | FITTING, 12-CTX-S | 1 |
| 12 | 58382 | CABLE CLAMP, CUSHIONED, 1_1/4” DIA | 2 |
| 13 | 15507 | NUT, NYLOCK - .375” | 2 |
| 14 | 15528 | WASHER, SAE FLAT - .375” | 2 |
| 15 | 11707 | BOLT - .375” X 1 | 4 |
| 16 | 15652 | VALVE, CHECK - HYDRAULIC/FUEL | 1 |
| 17 | 11318 | BUSHING, REDUCER - 5406-6-4 | 1 |
| 18 | 16990 | CONNECTOR, STR HOSE BARB - 4244-5-4 | 1 |

# H100-00080 - GULLWING CYLINDER & HYDRAULIC TANK FILL PIPING - (COMMON)

**NOTE: HYDRAULIC FITTINGS GET 545 LOCTITE™**

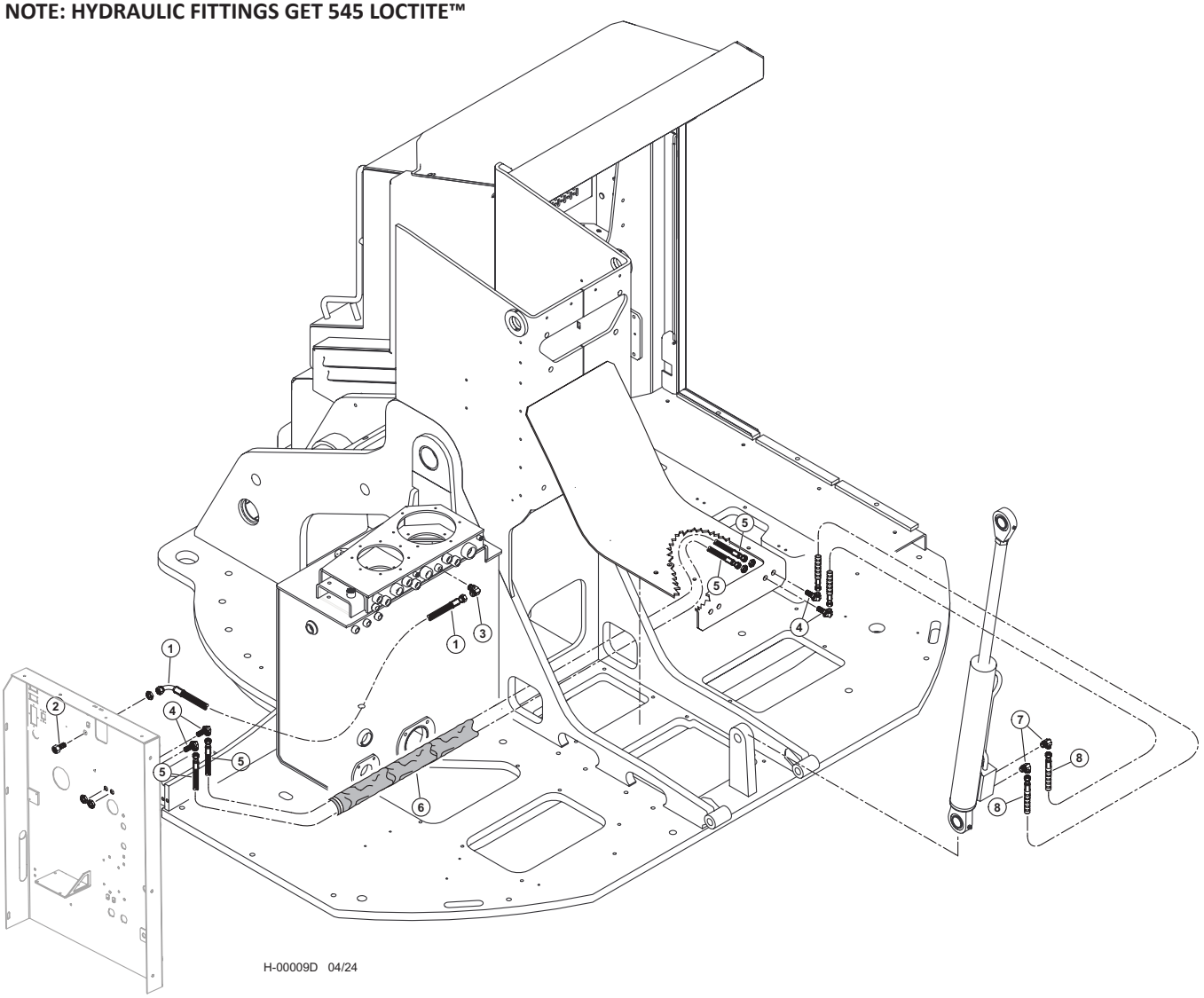


| Item | Part # | Description | Qty. |
|---|---|---|---|
| 1 | 65825 - (65817 - KIT) | HOSE, HYD, 187TC34 08-08JS-08J9<br>**(HYD FILL PUMP BULKDHEAD TO HYD. TANK RETURN FILTER)** | 1 |
| 2 | 54799 | BULKHEAD CONN -8JIC X-8 ORB | 1 |
| 3 | 15481 | ELBOW, 90 - 6801-8 | 1 |
| 4 | 54808 | 90* BULKHEAD UNION ELBOW -4 JIC WITH L/N | 4 |
| 5 | 65826 - (65817 - KIT) | HOSE, HYD, 387TC109 04-04JS-04JS<br>**(LIFT PUMP ELECTRICAL PANEL BULKHEAD TO CYLINDER BULKHEAD)** | 2 |
| 6 | 50188 | SLEEVE, PROTECTIVE HOSE - 150 | 1 |
| 7 | 51931 | ELBOW, 90 - 4-6 C50X-S (JIC) | 2 |
| 8 | 65832 - (65817 - KIT) | HOSE, HYD, 487TC21 04-04JS-04JS-SW<br>**(GULLWING LIFT CYLINDER TO BULKHEAD)** | 2 |

# H100-00090 - HYDRAULIC TANK FILL HOSE ASSEMBLY - (COMMON)

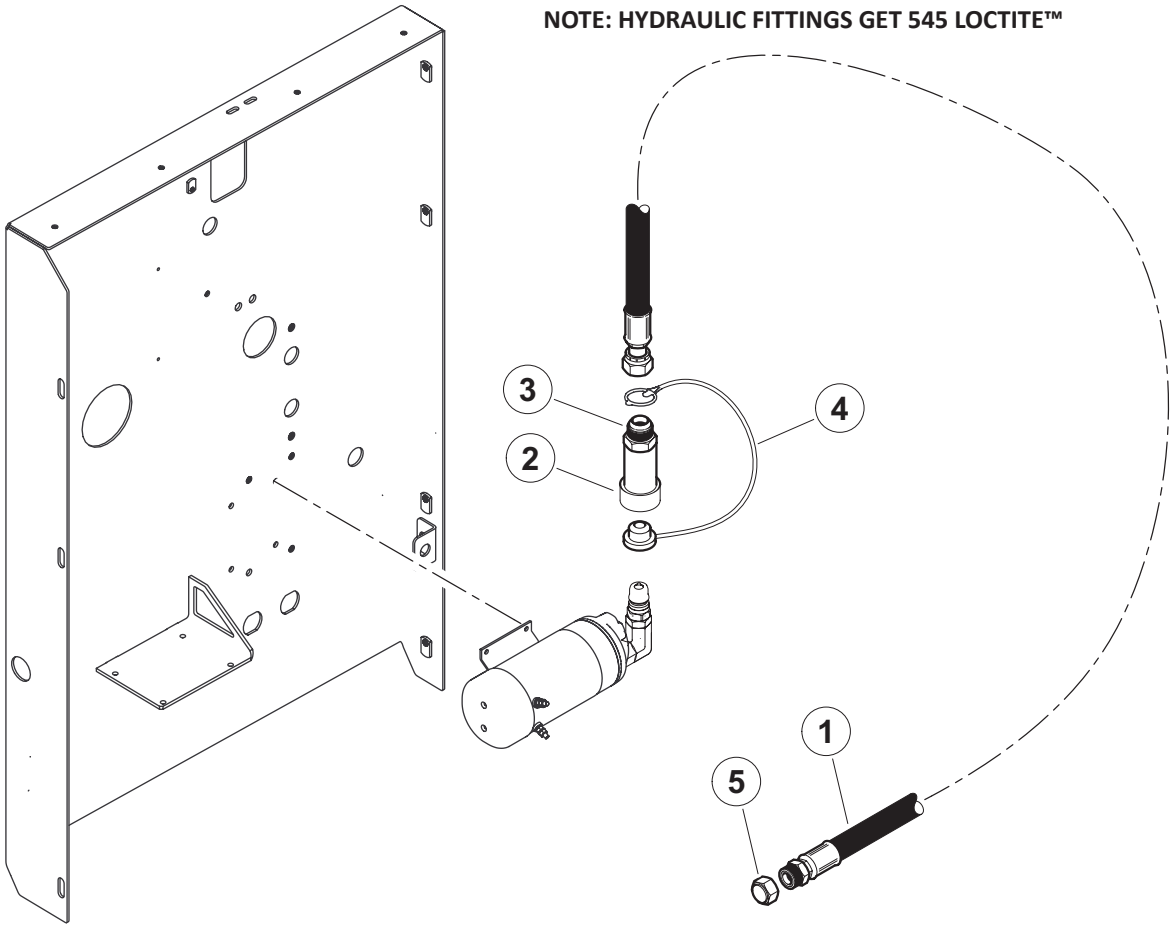


H-00010D 04/24

| Item | Part # | Description | Qty. |
|---|---|---|---|
| 1 | 65836 - (65817 - KIT) | HOSE, HYD, 187TC120 12-12JS-12MJ **(HYD FILL HOSE FOR FILL PUMP)** | 2 |
| 2 | 55621 | QUICK DISCONNECT FEMALE- 3/4 | 1 |
| 3 | 11324 | CONNECTOR, STR - 6400-12 | 1 |
| 4 | 55616 | PLUG, FILL HOSE - C SERIES | 1 |
| 5 | 11399 | CAP - 304-C-12 | 1 |

# H100-00100 - BOOM LIGHT WIRE HOSE ASSEMBLY

**NOTE: HYDRAULIC FITTINGS GET 545 LOCTITE™**

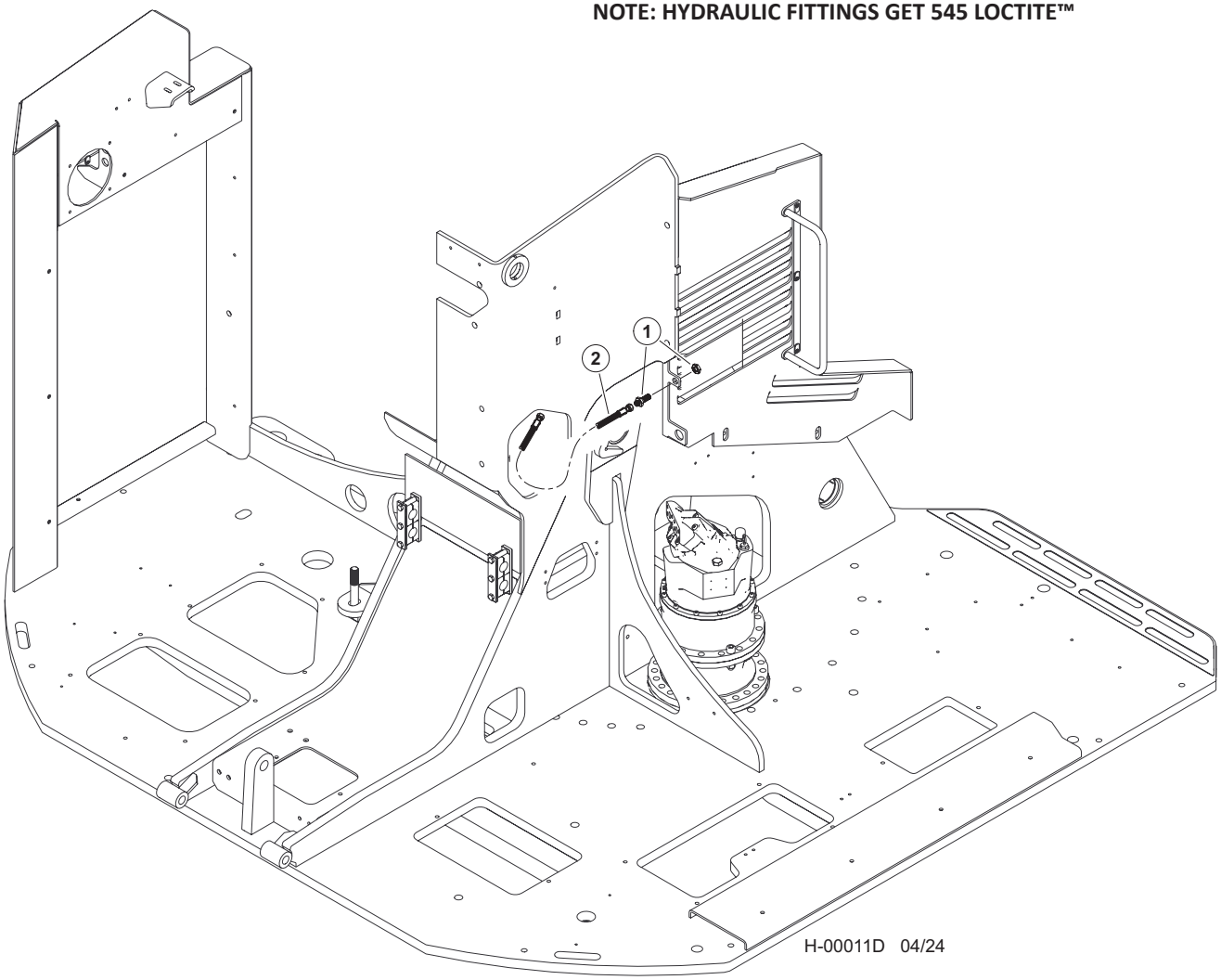


| Item | Part # | Description | Qty. |
|---|---|---|---|
| 1 | 50420 | CONNECTOR, STR BULKHEAD - 832-TT-06 | 1 |
| 2 | 65831 - (65817 - KIT) | HOSE, HYD, 387TC68 06-06OS-06OS **(LIGHT WIRE, BH TO BOOM)** | 1 |

# H100-00110 - HYDRAULIC TANK - SINGLE PUMP SUCTION

**NOTE: APPLY GREASE TO O-RINGS**

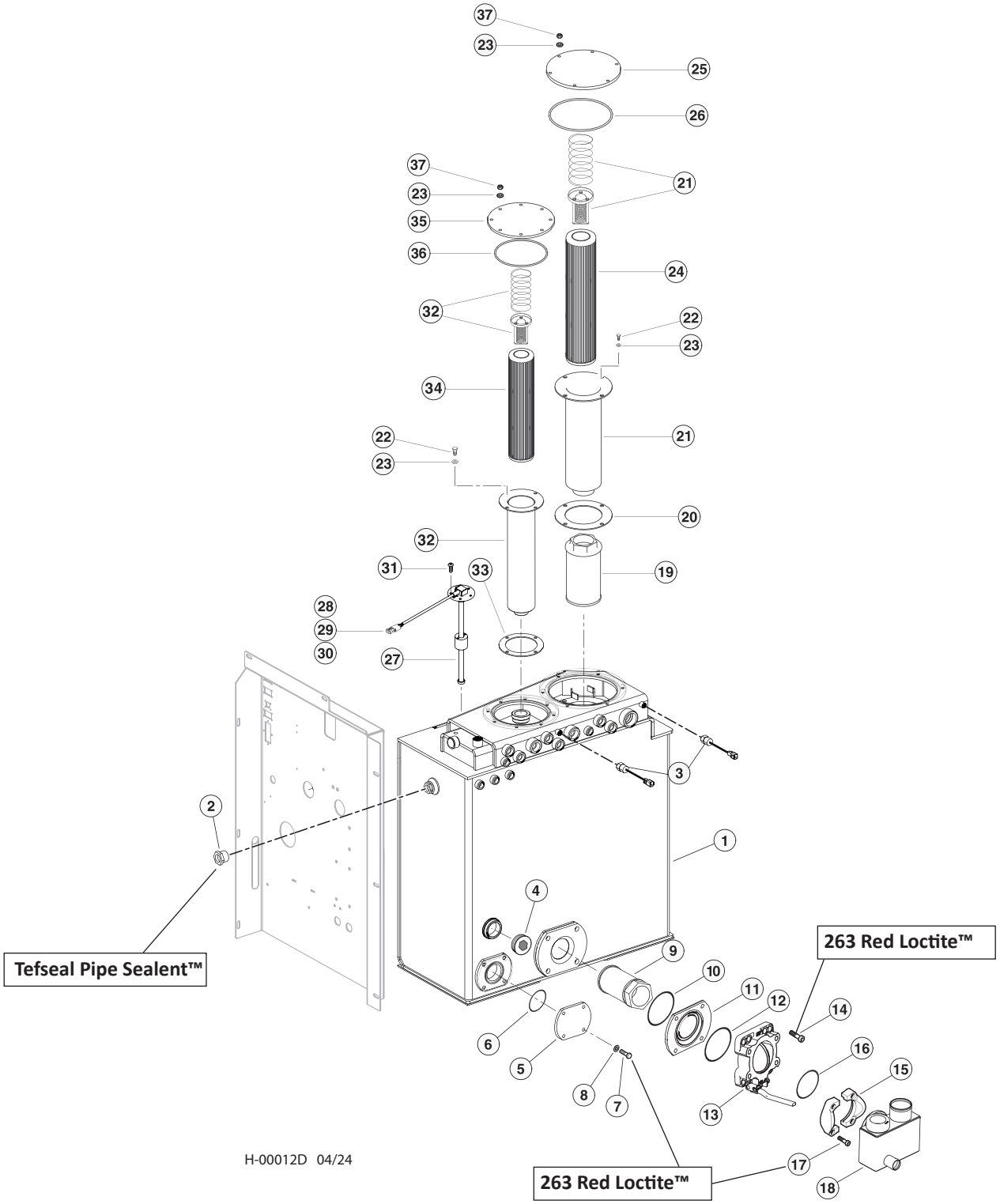

# H100-00110 - HYDRAULIC TANK - SINGLE PUMP SUCTION

| Item | Part # | Description | Qty. |
|---|---|---|---|
| 1 | 60350 | TANK, HYDRAULIC - D SERIES | 1 |
| 2 | 24308 | SIGHT GLASS - HYDRAULIC TANK **TEFSEAL PIPE SEALANT™** | 1 |
| 3 | 58307 | SWITCH, PRESSURE - SCHROEDER (37 psi) | 2 |
| 4 | 53105 | PLUG, PIPE - 2” | 1 |
| 5 | 60537 | FLANGE,  BLANK TANK - D-SERIES | 1 |
| 6 | 58061 | O-RING, FLANGE BLANK D-SERIES | 1 |
| 7 | 10783 | BOLT - .5” X 1” **263 RED LOCTITE™** | 4 |
| 8 | 15534 | WASHER, SAE FLAT - .5” | 4 |
| 9 | 15842 | FILTER, SCREEN - IMPLEMENT | 1 |
| 10 | 51726 | ORING, HDYRAULIC TANK | 1 |
| 11 | 42306 | PLATE, INTER.-SUCTION PORT 100mm VALVE | 1 |
| 12 | 58334 | O-RING, 4” BUTTERFLY VALVE (54786) | 1 |
| 13 | 54786 | VALVE, BUTTERFLY (4” ) | 1 |
| 14 | 23095 | BOLT, ALLEN HEAD - .625” x 2” **263 RED LOCTITE™** | 4 |
| 15 | 51625 | KIT, FLANGE - SUCTION TUBE (4” ) | 1 |
| 16 | 51725 | ORING, HDY. TANK BALL VALVE | 1 |
| 17 | 50383 | BOLT - 16MM-2.0P X 50MM **263 RED LOCTITE™** | 4 |
| 18 | 607450 | CANISTER, SUCTION D-MOD | 1 |
| 19 | 51624 | DIFFUSER, FILTER - MAIN RETURN  HYD TANK | 1 |
| 20 | 52126 | GASKET, MAIN RETURN FILTER - (51620) | 1 |
| 21 | 51620 | FILTER KIT, HYD. TANK MAIN RETURN | 1 |
| 22 | 15542 | BOLT - .375” X .75” | 8 |
| 23 | 15528 | WASHER, SAE FLAT - .375” | 22 |
| 24 | 52350 | ELEMENT, MAIN RETURN - HI EFF. | 1 |
| 25 | 46568 | COVER, ACCESS HR TANK W-KEEPER | 1 |
| 26 | 42310 | O-RING, HYD TANK COVER - 10.38” | 1 |
| 27 | 57264 | SENDER, HYD OIL LEVEL W/FLOAT | 1 |
| 28 | 54065 | SOCKET, CONTACT - 2 | 1 |
| 29 | 53176 | CONNECTOR, TERMINAL 16-18G SOLID DEUTSCH | 2 |
| 30 | 54064 | WEDGELOCK | 1 |
| 31 | 22862 | SCREW, MACHINE - #10-24 X .5” (BUTTON) | 5 |
| 32 | 51621 | FILTER KIT, HYD. TANK - CASE RETURN | 1 |
| 33 | 16852 | KIT, SEAL REPAIR - RETURN FILTER | 1 |
| 34 | 22647 | ELEMENT, HYDRAULIC TANK - SMALL | 1 |
| 35 | 54414 | COVER, HYDRAULIC TANK SINGLE | 1 |
| 36 | 15600 | O-RING - 8” DIA. -369 | 1 |
| 37 | 15507 | NUT, NYLOCK - .375” | 14 |

# H100-00120 - HYDRAULIC TANK - DUAL PUMP SUCTION

**NOTE: HYDRAULIC FITTINGS GET 545 LOCTITE™**

**NOTE: APPLY GREASE TO O-RINGS**

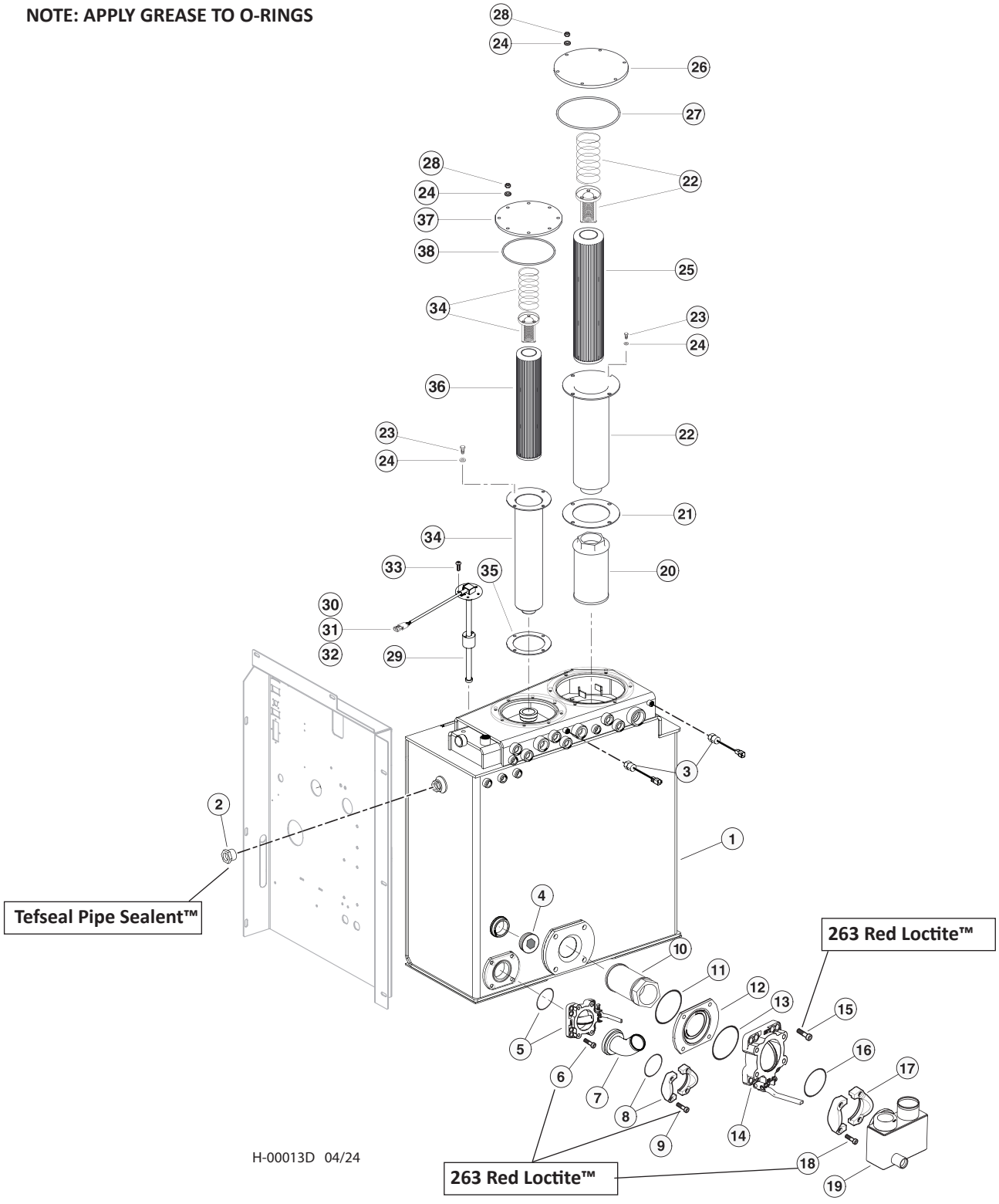

# H100-00120 - HYDRAULIC TANK - DUAL PUMP SUCTION

| Item | Part # | Description | Qty. |
|---|---|---|---|
| 1 | 60350 | TANK, HYDRAULIC - D SERIES | 1 |
| 2 | 24308 | SIGHT GLASS - HYDRAULIC TANK **TEFSEAL PIPE SEALANT™** | 1 |
| 3 | 58307 | SWITCH, PRESSURE - SCHROEDER (37 psi) | 2 |
| 4 | 53105 | PLUG, PIPE - 2” | 1 |
| 5 | 57834 | VALVE, BUTTERFLY (2.5” ) - DISC SAW | 1 |
| 6 | 50445 | BOLT, ALLEN HEAD - .5” X 1.25” **263 RED LOCTITE™** | 4 |
| 7 | 58099 | ELBOW, 45 - D-SERIES HYD. TANK (MODIFIED | 1 |
| 8 | 15193 | KIT, SPLIT FLANGE - 2.5” (CODE 61) | 1 |
| 9 | 15551 | BOLT - 12MM-1.75P X 40MM **263 RED LOCTITE™** | 4 |
| 10 | 15842 | FILTER, SCREEN - IMPLEMENT | 1 |
| 11 | 51726 | ORING, HDYRAULIC TANK | 1 |
| 12 | 42306 | PLATE, INTER.-SUCTION PORT 100mm VALVE | 1 |
| 13 | 58334 | O-RING, 4” BUTTERFLY VALVE (54786) | 1 |
| 14 | 54786 | VALVE, BUTTERFLY (4” ) | 1 |
| 15 | 23095 | BOLT, ALLEN HEAD - .625” x 2” **263 RED LOCTITE™** | 4 |
| 16 | 51725 | ORING, HDY. TANK BALL VALVE | 1 |
| 17 | 51625 | KIT, FLANGE - SUCTION TUBE (4” ) | 1 |
| 18 | 50383 | BOLT - 16MM-2.0P X 50MM **263 RED LOCTITE™** | 4 |
| 19 | 607450 | CANISTER, SUCTION D-MOD | 1 |
| 20 | 51624 | DIFFUSER, FILTER - MAIN RETURN HYD TANK | 1 |
| 21 | 52126 | GASKET, MAIN RETURN FILTER - (51620) | 1 |
| 22 | 51620 | FILTER KIT, HYD. TANK MAIN RETURN | 1 |
| 23 | 15542 | BOLT - .375” X .75” | 8 |
| 24 | 15528 | WASHER, SAE FLAT - .375” | 22 |
| 25 | 52350 | ELEMENT, MAIN RETURN - HI EFF. | 1 |
| 26 | 46568 | COVER, ACCESS HR TANK W-KEEPER | 1 |
| 27 | 42310 | O-RING, HYD TANK COVER - 10.38” | 1 |
| 28 | 15507 | NUT, NYLOCK - .375” | 14 |
| 29 | 57264 | SENDER, HYD OIL LEVEL W/FLOAT | 1 |
| 30 | 54065 | SOCKET, CONTACT - 2 | 1 |
| 31 | 53176 | CONNECTOR, TERMINAL 16-18G SOLID DEUTSCH | 2 |
| 32 | 54064 | WEDGELOCK | 1 |
| 33 | 22862 | SCREW, MACHINE - #10-24 X .5” (BUTTON) | 5 |
| 34 | 51621 | FILTER KIT, HYD. TANK - CASE RETURN | 1 |
| 35 | 16852 | KIT, SEAL REPAIR - RETURN FILTER | 1 |
| 36 | 22647 | ELEMENT, HYDRAULIC TANK - SMALL | 1 |
| 37 | 54414 | COVER, HYDRAULIC TANK SINGLE | 1 |
| 38 | 15600 | O-RING - 8” DIA. -369 | 1 |

# H100-00130 - HYDRAULIC TANK FITTINGS

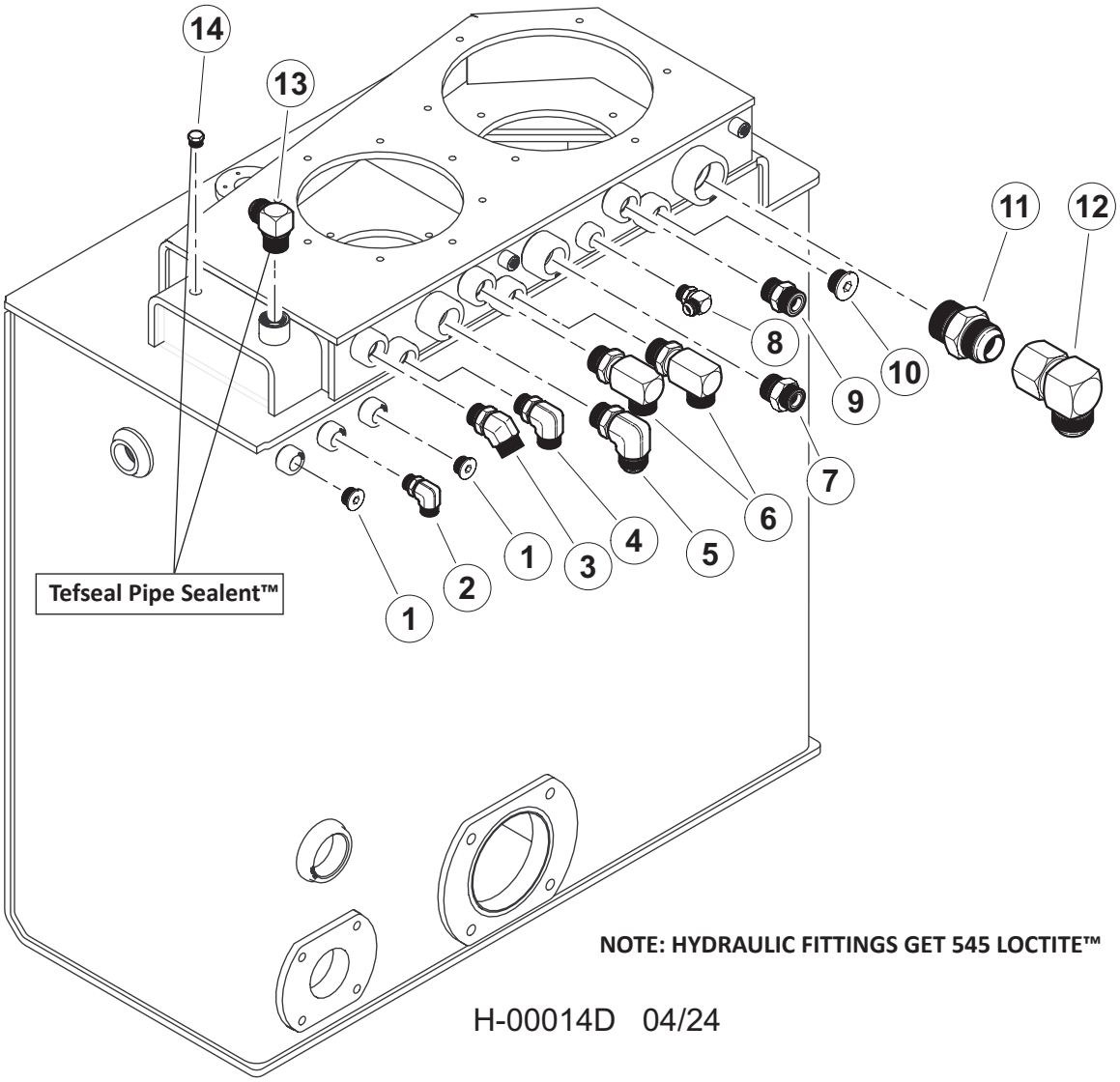


| Item | Part # | Description | Qty. |
|---|---|---|---|
| 1 | 18949 | PLUG - 6408-HHP-8 | 2 |
| 2 | 20031 | ELBOW, 90 - 6-8 C5OLO-S | 1 |
| 3 | 19127 | ELBOW, 45 - FF2068T-1212S | 1 |
| 4 | 17688 | ELBOW, 90 - FF1868T-1212S | 1 |
| 5 | 15484 | ELBOW, 90 - 16 C5OX-S | 1 |
| 6 | 57444 | FITTING, 12 CC5OLO-S | 2 |
| 7 | 15225 | CONNECTOR, STR - FF1852T-1616S | 1 |
| 8 | 15481 | ELBOW, 90 - 6801-8 | 1 |
| 9 | 15152 | CONNECTOR, STR - FF1852T-1212S | 1 |
| 10 | 15584 | PLUG - 6408-HHP-12 | 1 |
| 11 | 22319 | CONNECTOR, STR 24F5OX-S THRML B-PASS GT | 1 |
| 12 | 54714 | ELBOW, 90 SWIVEL 24C6X-S (24 JICMF) | 1 |
| 13 | 58210 | FITTING, 12-CTX-S **TEFSEAL PIPE SEALANT™** | 1 |
| 14 | 15515 | PLUG - 5406-P-4 | 1 |

# H100-00140 - HYD TANK HEATER U. (120V)

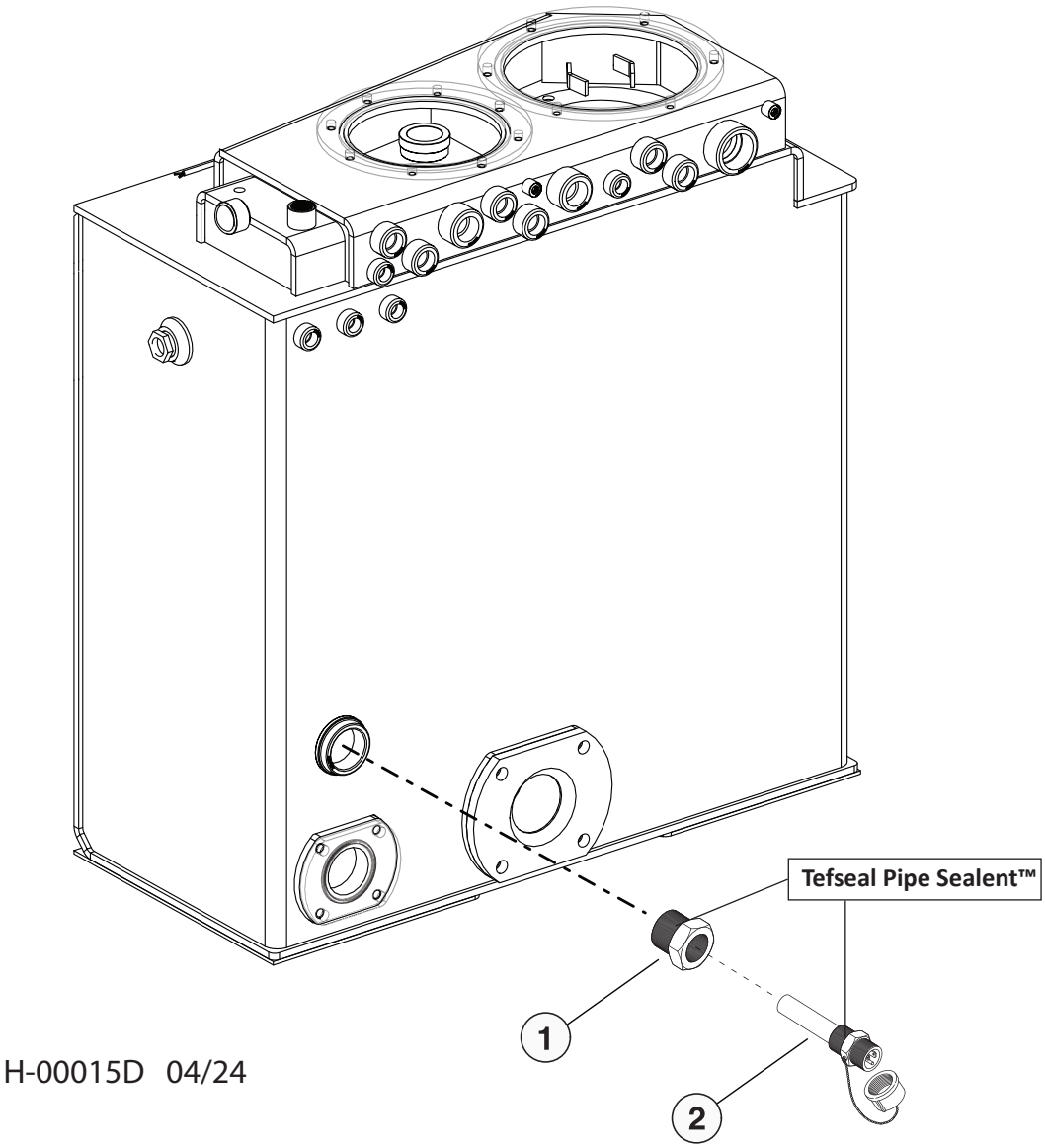


H-00015D 04/24

| Item | Part # | Description | Qty. |
|---|---|---|---|
| 1 | 20069 | HEATER ELEMENT- HYD. TANK (120V) **TEFSEAL PIPE SEALANT™** | 1 |
| 2 | 26397 | BUSHING, BLACK - 2” X 1.25” **TEFSEAL PIPE SEALANT™** | 1 |

# H100-00150 - HYDRAULIC TANK INSTALLATION

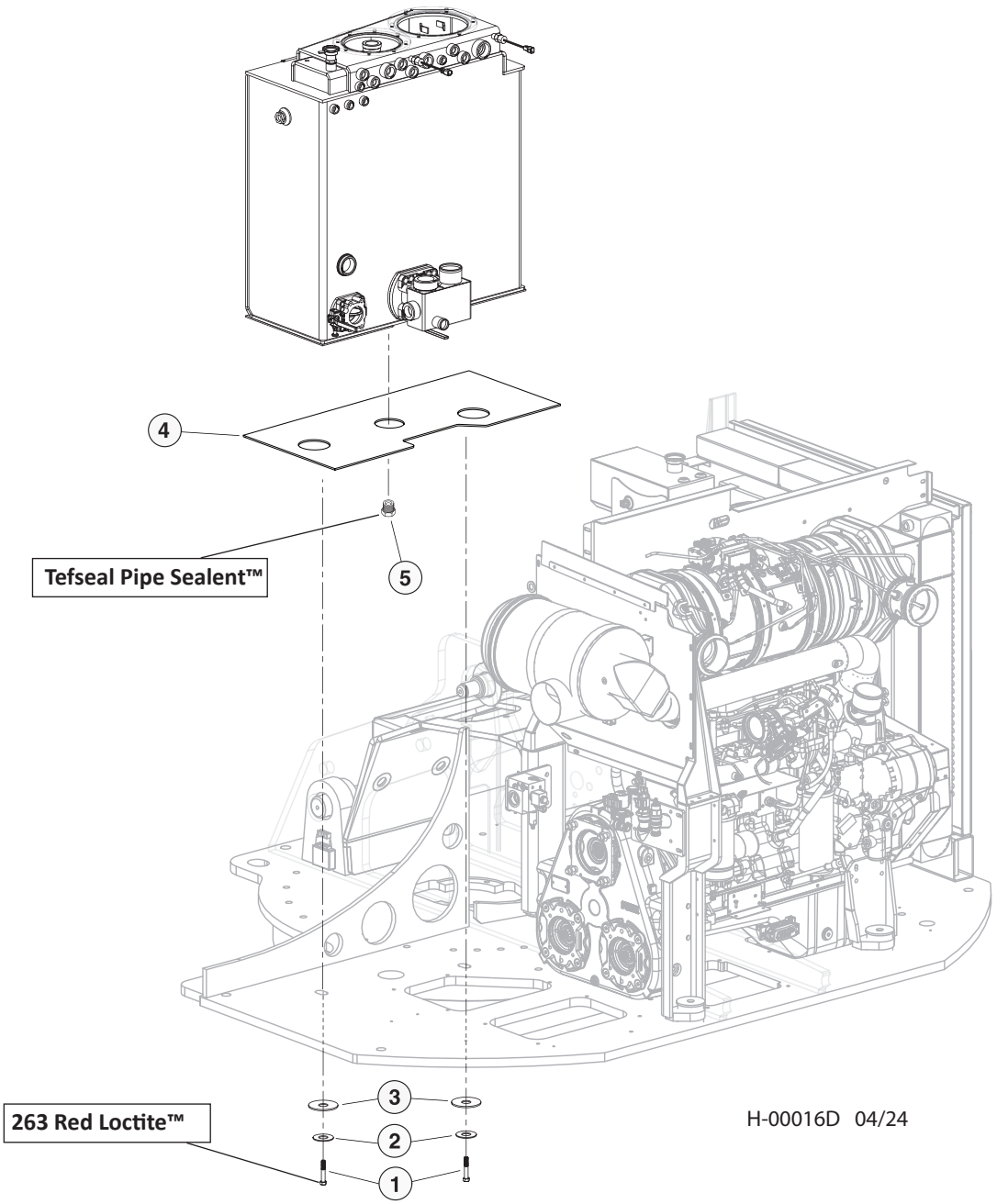


| Item | Part # | Description | Qty. |
|---|---|---|---|
| 1 | 57870 | BOLT - .625” X 2.75” **263 Red Loctite™** | 2 |
| 2 | 54148 | WASHER, BURNED - .66” X 2” x 1/4” | 2 |
| 3 | 17918 | WASHER, ISOLATOR MOUNT - .875” X 3.5” | 2 |
| 4 | 60366 | RUBBER, HYD TANK D-SERIES | 1 |
| 5 | 16887 | PLUG - 5406-HHP-12/ 3/4 HEX PIPE **TEFSEAL PIPE SEALANT™** | 1 |

# K220/L90 MAIN CONTROL VALVES

# H100-00160 - MAIN VALVE INSTALLATION - (K220/L90 VALVE)

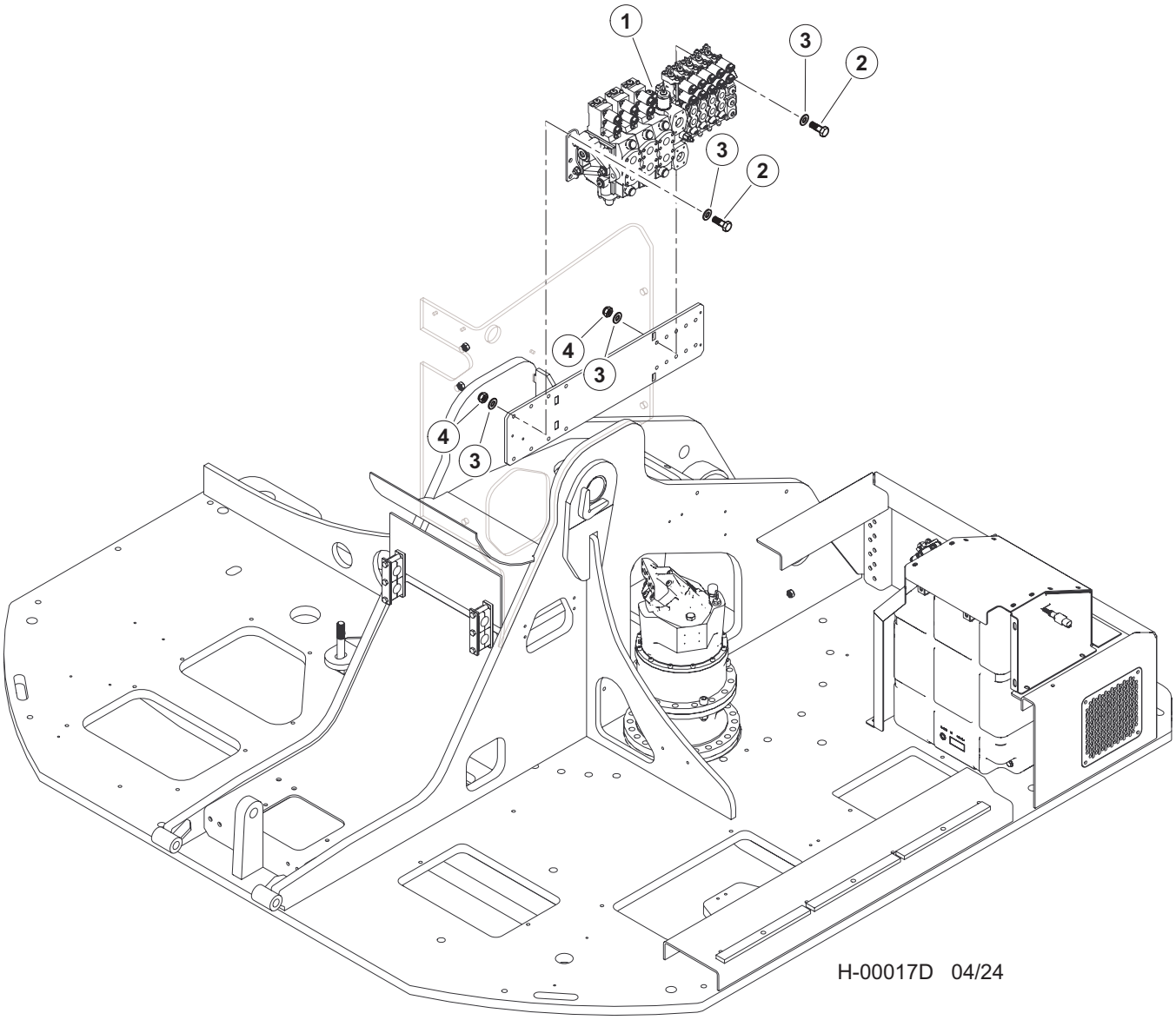

# H100-00160 - MAIN VALVE INSTALLATION - (K220/L90 VALVE)

| Item | Part # | Description | Qty. |
|---|---|---|---|
| 1 | 57939 | VALVE, MAIN 3K220/5L90 - DISC SAW - LEVELING | 1 |
| | 57989 | VALVE, MAIN 3K220/3L90 - DISC SAW - NON-LEVELING | 1 |
| | 57984 | VALVE, MAIN 4K220/5L90 - DISC SAW/BAR SAW COMBO - LEVELING | 1 |
| | 57988 | VALVE, MAIN 4K220/3L90 - DISC SAW/BAR SAW COMBO - NON-LEVELING | 1 |
| | 57985 | VALVE, MAIN - IMP (5K220/3L90) - CONTROL FALL PROCESSOR - LEVELING | 1 |
| | 57990 | VALVE, MAIN - IMP (5K220/1L90) - CONTROL FALL PROCESSOR - NON-LEVELING | 1 |
| | 57940 | VALVE, MAIN 4K220/3L90 - DANGLE PROCESSOR, FIXED ARM - LEVELING | 1 |
| | 58131 | VALVE, MAIN - IMP (4K220/1L90) - DANGLE PROCESSOR, FIXED ARM - NON-LEVELING | 1 |
| | 57986 | VALVE, MAIN 4K220/5L90 - DANGLE PROCESSOR, SQUIRT ARM - LEVELING | 1 |
| | 58000 | VALVE, MAIN 4K220/5L90 - DANGLE PROCESSOR, SQUIRT ARM - NON-LEVELING | 1 |
| 2 | 10402 | BOLT - .375” X 1.25” | 4 |
| 3 | 10802 | WASHER, FLAT - .375” | 8 |
| 4 | 10813 | NUT, LOCK - .375” | 4 |

# H100-00170 - MAIN VALVE HYD. FITTINGS - DISC SAW (NON-LEVELING)

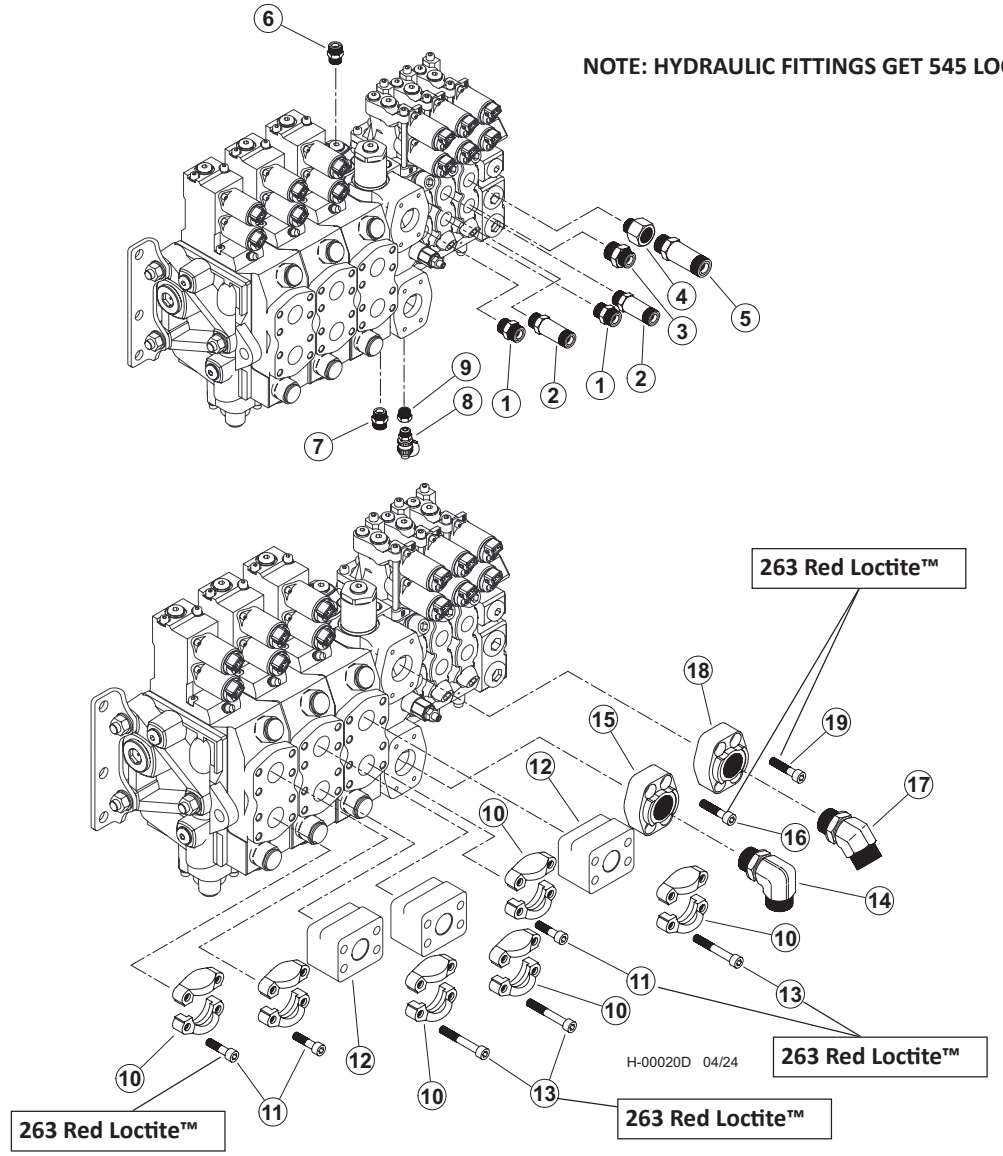


| Item | Part # | Description | Qty. |
|---|---|---|---|
| 1 | 50039 | CONNECTOR, STR - 848-TTO-10X10 | 2 |
| 2 | 52554 | CONNECTOR, STR LONG - 10X10 | 2 |
| 3 | 16851 | CONNECTOR, STR - FF1852T-1210S | 1 |
| 4 | 19289 | BUSHING, REDUCER - 6410-10X12 | 1 |
| 5 | 19092 | CONNECTOR, STR LONG - 848L-TTO-12X12 | 1 |
| 6 | 22901 | CONNECTOR, STR - 6-8 F5OLO-S | 1 |
| 7 | 18034 | CONNECTOR, STR - FF1852T-0606S | 1 |
| 8 | 57819 | TAP, GAUGE PORT - #4 SAE ORING BOSS- ST | 1 |
| 9 | 16294 | BUSHING, REDUCER - 6410-6-4 | 1 |
| 10 | 15111 | KIT, SPLIT FLANGE CODE 61 1 INCH | 6 |
| 11 | 20444 | BOLT, ALLEN HEAD - 10MM-1.5P X 35MM **263 RED LOCTITE™** | 12 |
| 12 | 46248 | MANIFOLD, VALVE BLOCK SAE 1" CODE 62 | 3 |
| 13 | 55664 | BOLT, ALLEN HEAD - 10MM-1.5P X 80MM **263 RED LOCTITE™** | 12 |
| 14 | 21143 | ELBOW, 90 - 20-16 C5OLO-S | 1 |
| 15 | 18397 | CONNECTOR, FLANGE PAD - W48-16-16U(C 62) | 1 |
| 16 | 18988 | BOLT, ALLEN HEAD - 12MM-1.75P X 45MM **263 RED LOCTITE™** | 4 |
| 17 | 57477 | FITTING, 20 V5OX-S | 1 |
| 18 | 17909 | CONNECTOR, FLANGE PAD-W46K-20-20 CODE 61 | 1 |
| 19 | 20444 | BOLT, ALLEN HEAD - 10MM-1.5P X 35MM **263 RED LOCTITE™** | 4 |

# H100-00180 - MAIN VALVE HYD. FITTINGS - DISC SAW (LEVELING)

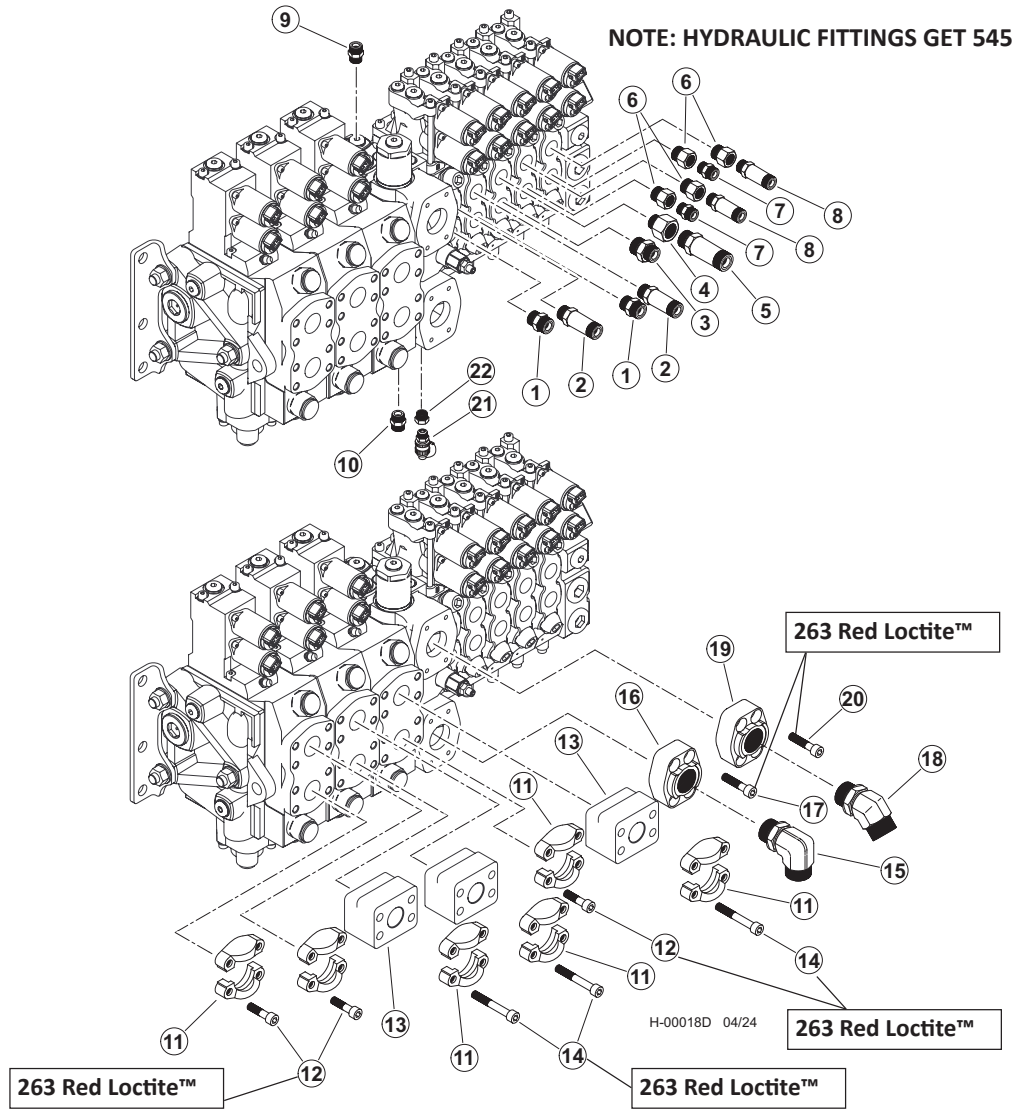


| Item | Part # | Description | Qty. |
|---|---|---|---|
| 1 | 50039 | CONNECTOR, STR - 848-TTO-10X10 | 2 |
| 2 | 52554 | CONNECTOR, STR LONG - 10X10 | 2 |
| 3 | 16851 | CONNECTOR, STR - FF1852T-1210S | 1 |
| 4 | 19289 | BUSHING, REDUCER - 6410-10X12 | 1 |
| 5 | 19092 | CONNECTOR, STR LONG - 848L-TTO-12X12 | 1 |
| 6 | 19290 | BUSHING, REDUCER - 6410-10-8 | 4 |
| 7 | 15117 | CONNECTOR, STR - FF1852T-0808S | 2 |
| 8 | 19091 | CONNECTOR, STR LONG - 848L-TTO-08X08 | 2 |
| 9 | 22901 | CONNECTOR, STR - 6-8 F5OLO-S | 1 |
| 10 | 18034 | CONNECTOR, STR - FF1852T-0606S | 1 |
| 11 | 15111 | KIT, SPLIT FLANGE CODE 61 1 INCH | 6 |
| 12 | 20444 | BOLT, ALLEN HEAD - 10MM-1.5P X 35MM **263 RED LOCTITE™** | 12 |
| 13 | 46248 | MANIFOLD, VALVE BLOCK SAE 1” CODE 62 | 3 |
| 14 | 55664 | BOLT, ALLEN HEAD - 10MM-1.5P X 80MM **263 RED LOCTITE™** | 12 |
| 15 | 21143 | ELBOW, 90 - 20-16 C5OLO-S | 1 |
| 16 | 18397 | CONNECTOR, FLANGE PAD - W48-16-16U(C 62) | 1 |
| 17 | 18988 | BOLT, ALLEN HEAD - 12MM-1.75P X 45MM | 4 |
| 18 | 57477 | FITTING, 20 V5OX-S | 1 |
| 19 | 17909 | CONNECTOR, FLANGE PAD-W46K-20-20 CODE 61 | 1 |
| 20 | 20444 | BOLT, ALLEN HEAD - 10MM-1.5P X 35MM **263 RED LOCTITE™** | 4 |
| 21 | 57819 | TAP, GAUGE PORT - #4 SAE ORING BOSS- ST | 1 |
| 22 | 16294 | BUSHING, REDUCER - 6410-6-4 | 1 |

# H100-00181 - MAIN VALVE COMPONENTS - DISC SAW

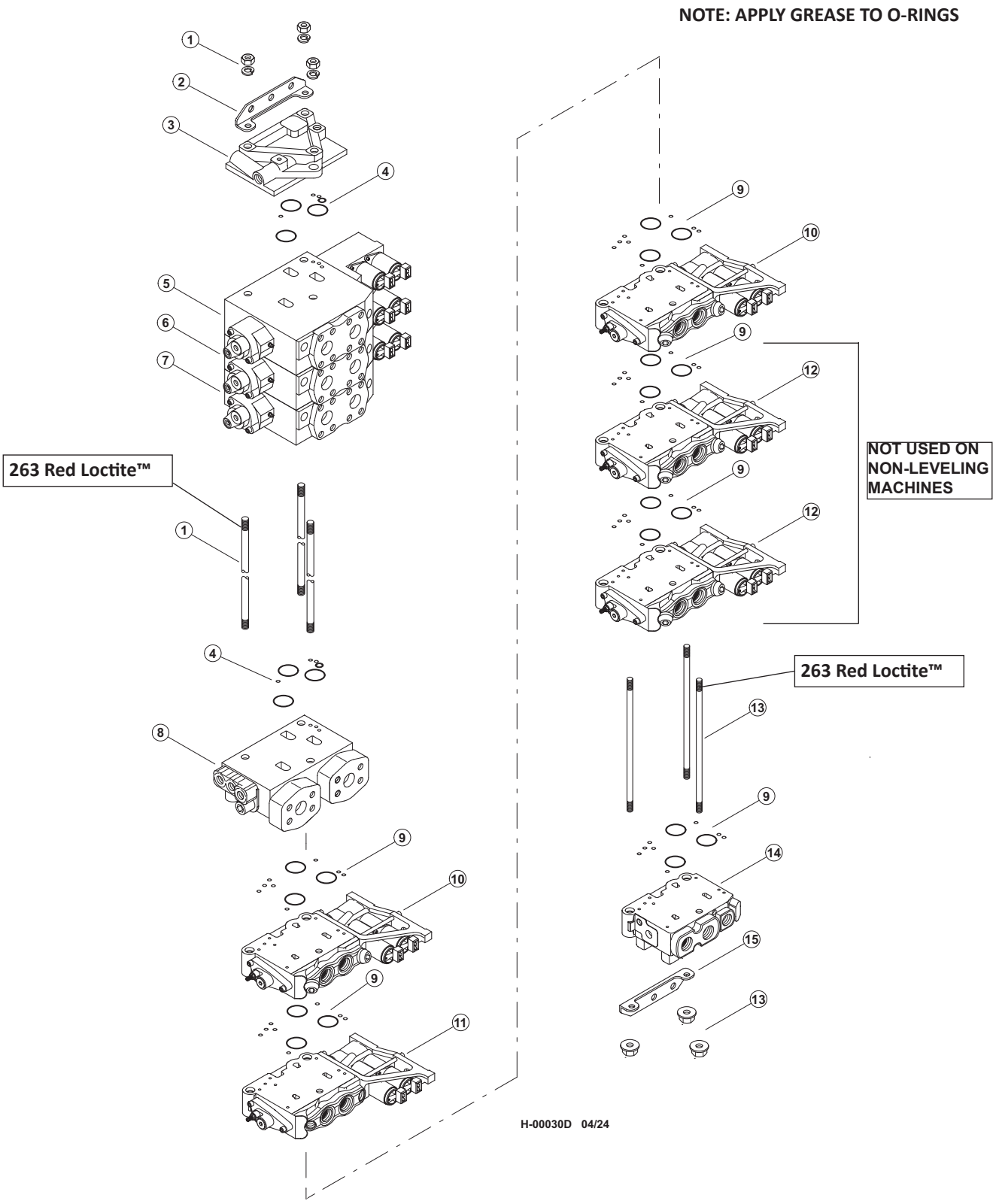

# H100-00181 - MAIN VALVE COMPONENTS - DISC SAW

| Item | Part # | Description | Qty. |
|---|---|---|---|
| | **57939** | **VALVE, MAIN 3K220/5L90 - DISC SAW - LEVELING** | |
| | **57989** | **VALVE, MAIN 3K220/3L90 - DISC SAW - NON-LEVELING** | |
| 1 | 9120092372 | ROD, TIE - K220 (3-SECTION SPAN) **263 RED LOCTITE™** | 1 |
| 2 | 9120092365 | KIT, BRACKET - K220 | 1 |
| 3 | KU35278 | END COVER, K220 VALVE (US) | 1 |
| 4 | 24649 | KIT, SEALS - VOAC INTERSECTION (9120092315) | 4 |
| 5 | KM57410 | VALVE SECTION, K220 - STICK BOOM (MR) | 1 |
| 6 | KM42799 | VALVE SECTION, K220 - TOOL TILT (MR) | 1 |
| 7 | KM55985 | VALVE SECTION, K220 - MAIN BOOM (MR) | 1 |
| 8 | KI37744 | INLET SECTION | 1 |
| 9 | 23404 | KIT, SEAL REPAIR - L90LS FACE | 6/9 |
| 10 | LM42803 | VALVE SECTION, L90 - ACCUMULATOR/CLAMP (TCT) | 2 |
| 11 | LM42802 | VALVE SECTION, L90 - HEAD ROTATE (TCT) | 1 |
| 12 | LM42801 | VALVE SECTION, L90 - CAB LEVEL (TCT) | 2 |
| 13 | 393000K002 | TIE ROD KIT - 3 SECTION - L90 (NON-LEVELING) **263 RED LOCTITE™** | 1 |
| 13 | 393000K005 | TIE ROD KIT - 5 SECTION - L90 (LEVELING) | 1 |
| 14 | LU39178 | OUTLET (US) | 1 |
| 15 | 393000K824 | KIT, BRACKET - L90 | 1 |

# H100-00182 - K220 MAIN VALVE SECTION - STICK BOOM - (DISC SAW)

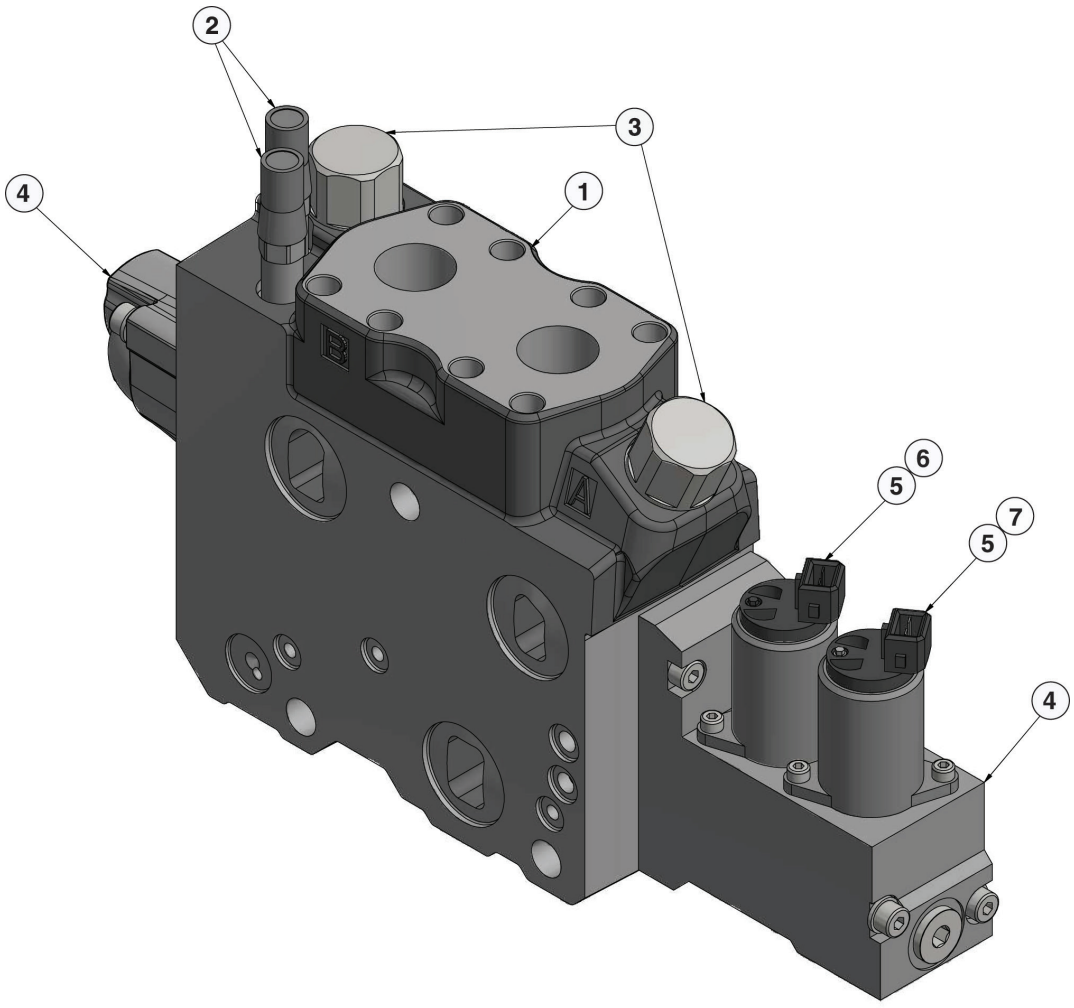


H-00157D 07/24

| Item | Part # | Description | Qty. |
|---|---|---|---|
| 1 | 20089148 | VALVE SECTION, STICK - K220 | 1 |
| 2 | 699170 | SUPPLY REDUCER | 2 |
| 3 | 56161 | PORT RELIEF VALVE | 2 |
| 4 | 26424 | CAP KIT | 1 |
| 5 | 20976 | SOLENOID | 2 |
| 6 | 19213043 | PILOT ORIFICE | 1 |
| 7 | 19213046 | PILOT ORIFICE | 1 |
| | 20045380 | SPOOL **(NOT SHOWN)** | 1 |
| | 19217319 | COMPENSATOR **(NOT SHOWN)** | 1 |
| | 24649 | FACE SEAL KIT **(NOT SHOWN)** | 1 |

# H100-00183 - K220 MAIN VALVE SECTION - TOOL TILT - (DISC SAW)

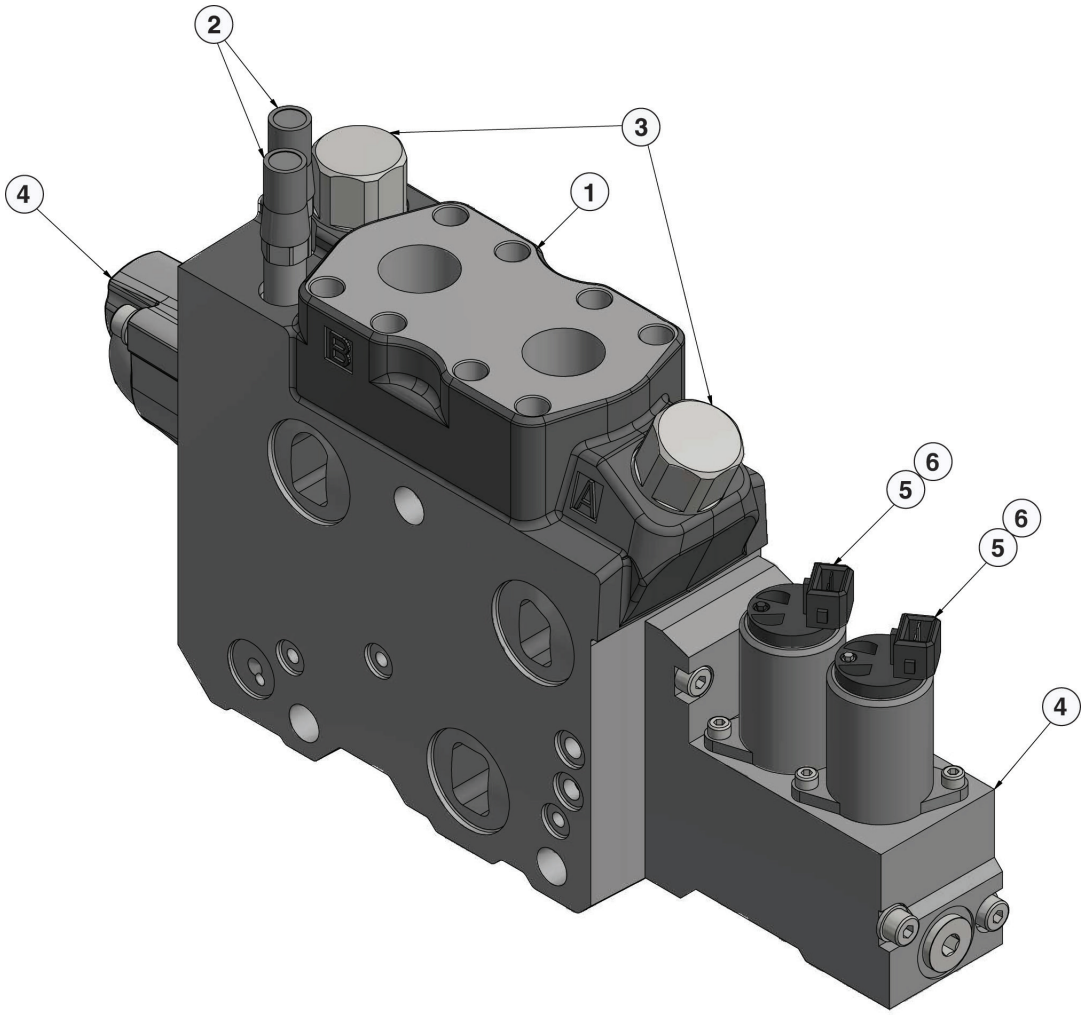


H-00158D 07/24

| Item | Part # | Description | Qty. |
|---|---|---|---|
| 1 | 20089147 | VALVE SECTION, TOOL TILT - K220 | 1 |
| 2 | 699170 | SUPPLY REDUCER | 2 |
| 3 | 56161 | PORT RELIEF VALVE | 2 |
| 4 | 26424 | CAP KIT | 1 |
| 5 | 20976 | SOLENOID | 2 |
| 6 | 19213043 | PILOT ORIFICE | 1 |
| | 19217324 | SPOOL **(NOT SHOWN)** | 1 |
| | 19215648 | COMPENSATOR **(NOT SHOWN)** | 1 |
| | 24649 | FACE SEAL KIT **(NOT SHOWN)** | 1 |

# H100-00184 - K220 MAIN VALVE SECTION - MAIN BOOM - (DISC SAW)

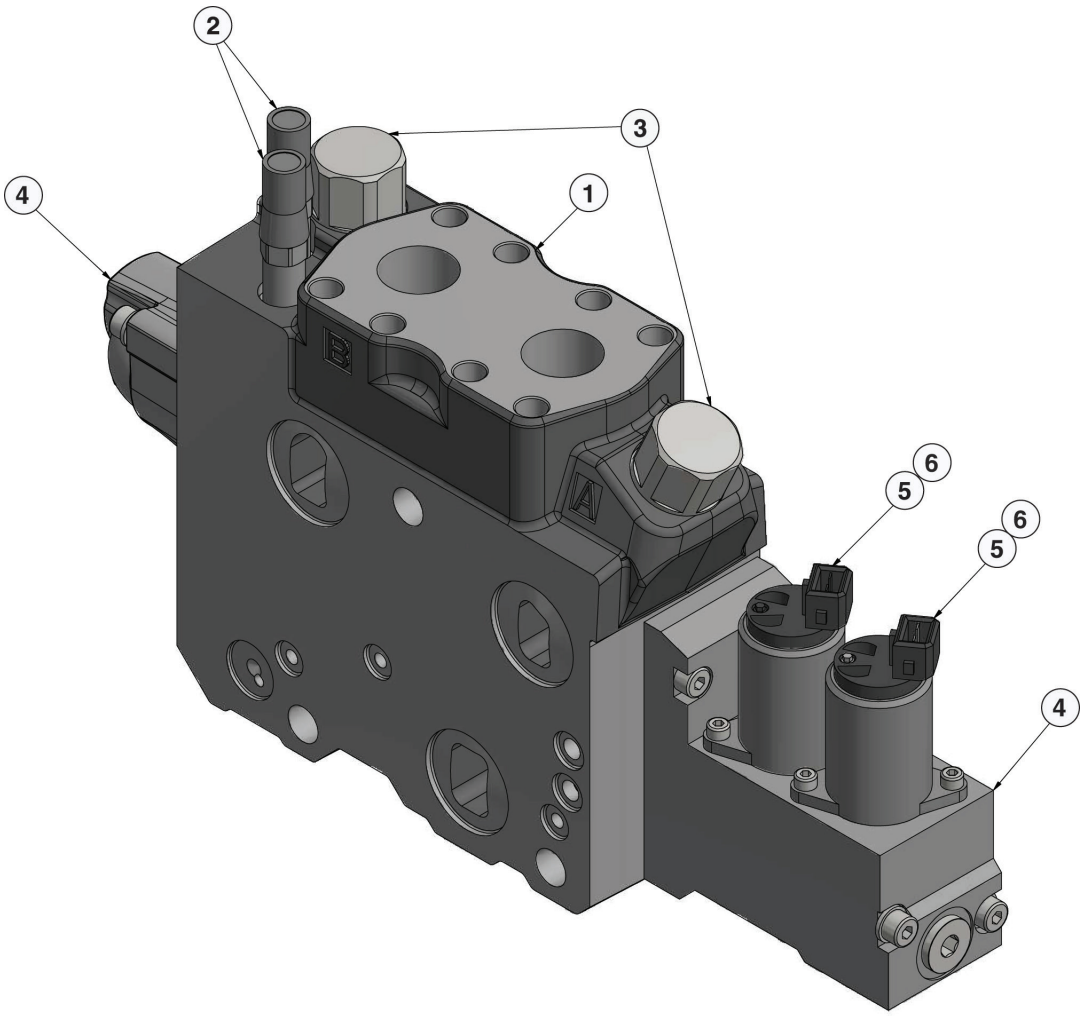


H-00158D 07/24

| Item | Part # | Description | Qty. |
|---|---|---|---|
| 1 | 699210 | VALVE SECTION, MAIN BOOM - K220 | 1 |
| 2 | 699170 | SUPPLY REDUCER | 2 |
| 3 | 56161 | PORT RELIEF VALVE | 2 |
| 4 | 26424 | CAP KIT | 1 |
| 5 | 20976 | SOLENOID | 2 |
| 6 | 19213046 | PILOT ORIFICE | 1 |
| | 19215707 | SPOOL **(NOT SHOWN)** | 1 |
| | 19215649 | COMPENSATOR **(NOT SHOWN)** | 1 |
| | 24649 | FACE SEAL KIT **(NOT SHOWN)** | 1 |

# H100-00185 - K220 MAIN VALVE SECTION - INLET - (DISC SAW)

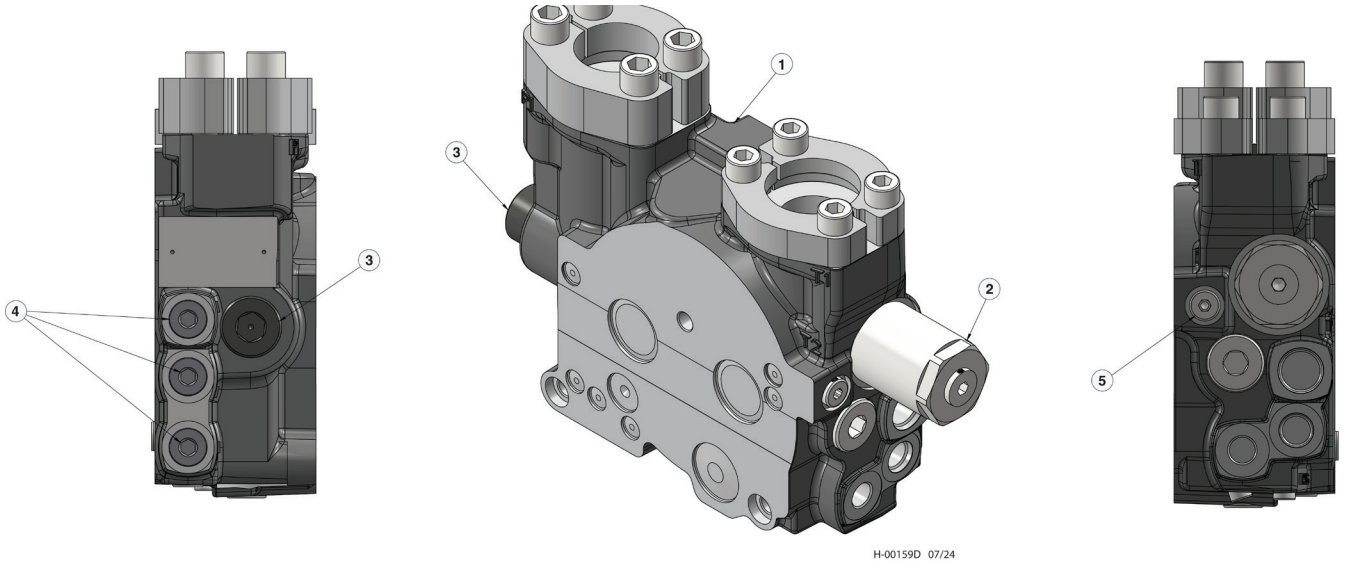


| Item | Part # | Description | Qty. |
|---|---|---|---|
| | 20089048 | INLET SECTION | 1 |
| 1 | 20089023 | COMBO LS INLET | 1 |
| 2 | 19217259 | COUNTER PRESSURE VLV | 1 |
| 3 | 19217256 | RELIEF MAIN | 3 |
| 4 | 19215123 | PLUG | 1 |
| 5 | 19206051 | SCREW | 1 |

# H100-00186 - L90 MAIN VALVE SECTION - ACCUMULATOR & CLAMP- (DISC SAW)

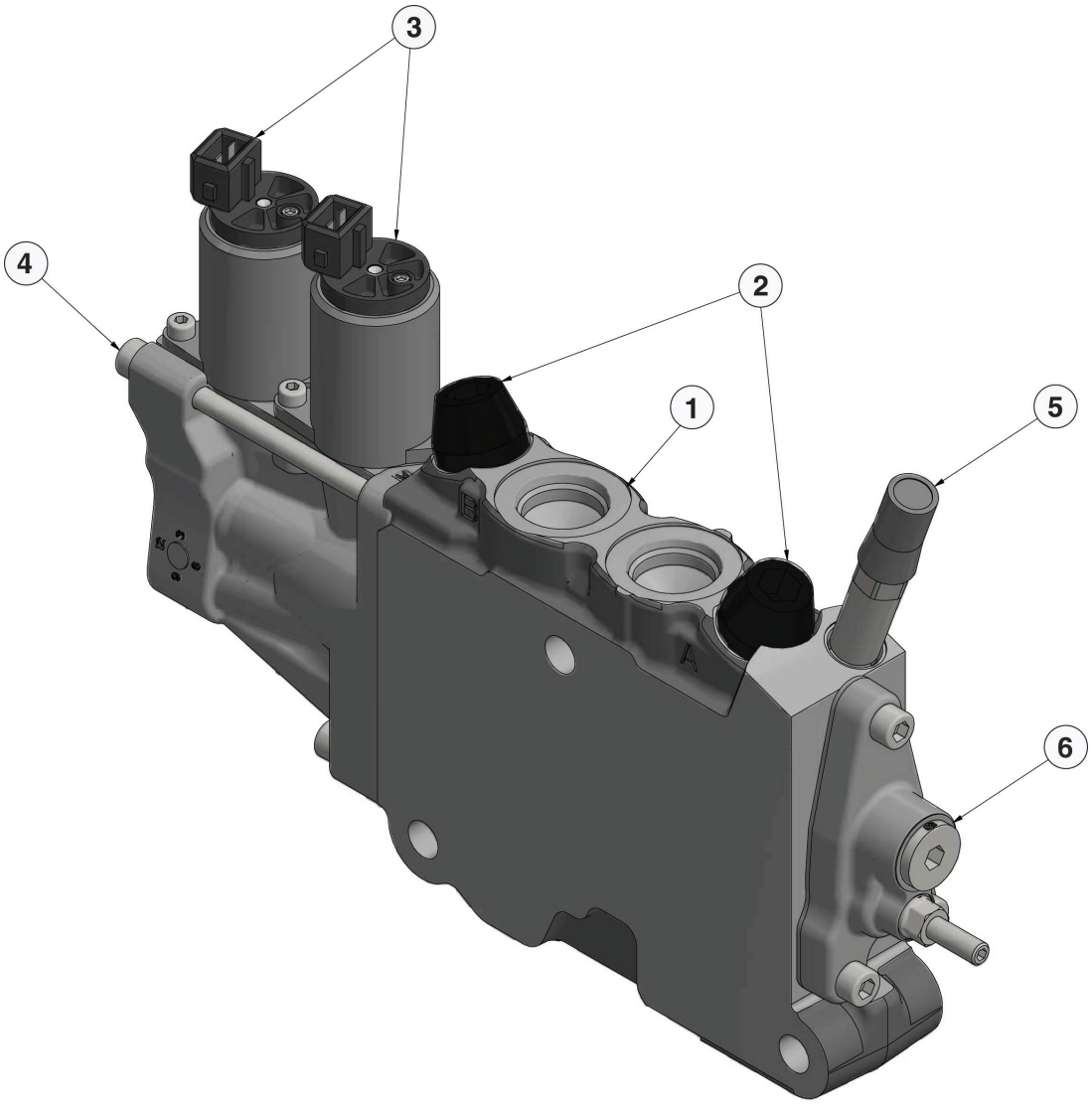


H-00160D 07/24

| Item | Part # | Description | Qty. |
|---|---|---|---|
| 1 | 20071254 | VALVE SECTION, L90 - ACCUMULATOR/CLAMP | 1 |
| 2 | 51528 | PORT RV | 2 |
| 3 | 2006854 | SOLENOID | 2 |
| 4 | 23416 | B SIDE ACTUATOR CAP | 1 |
| 5 | 699170 | SUPPLY REDUCER | 1 |
| 6 | 23414 | EC2 KIT W/O LEVER SHAFT | 1 |
| | 19213586 | SPOOL **(NOT SHOWN)** | 1 |
| | 20047208 | COMPENSATOR **(NOT SHOWN)** | 1 |
| | 23404 | FACE SEAL KIT **(NOT SHOWN)** | 1 |

# H100-00187 - L90 MAIN VALVE SECTION - CAB LEVEL - (DISC SAW)

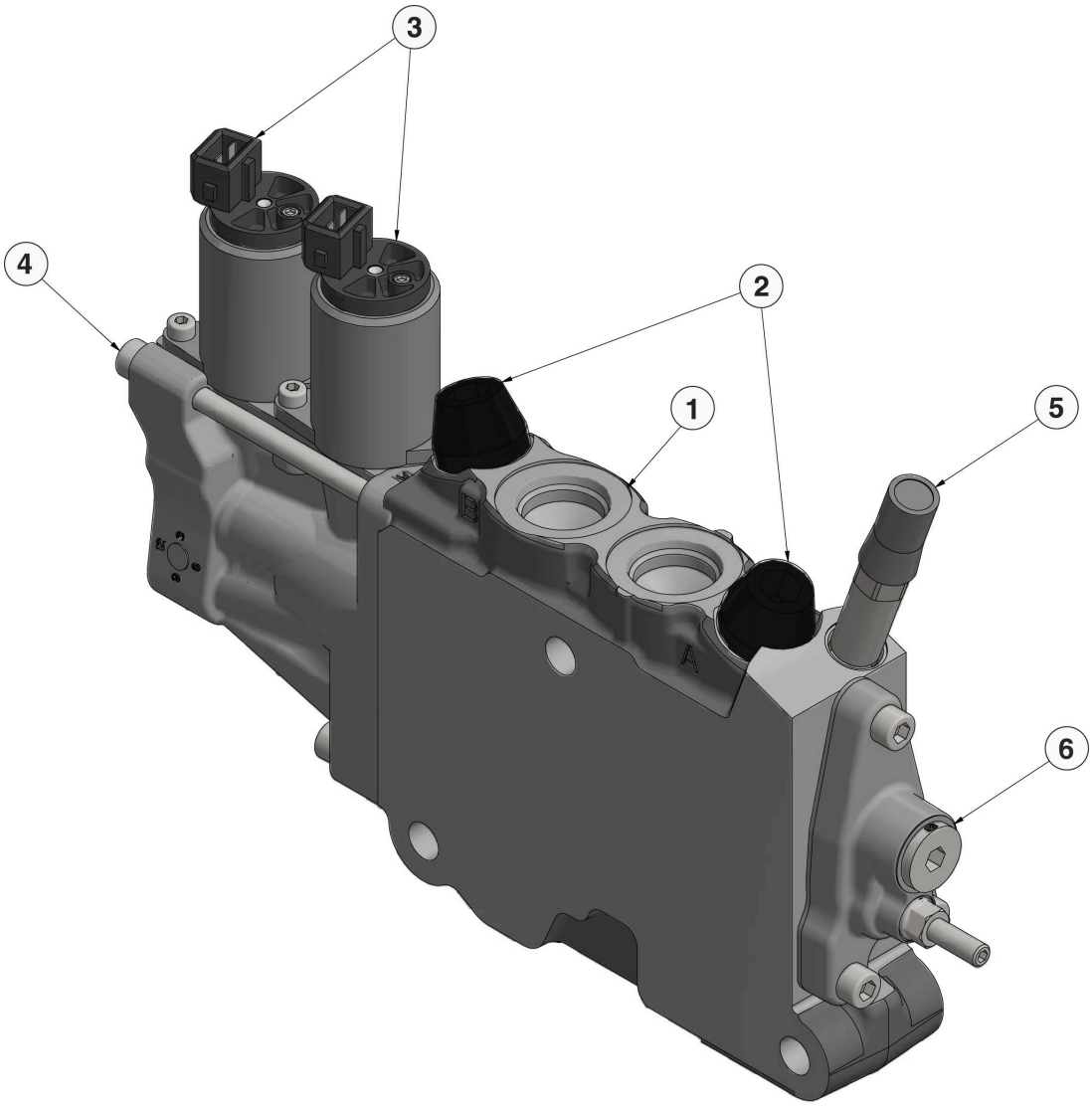


H-00160D 07/24

| Item | Part # | Description | Qty. |
|---|---|---|---|
| 1 | 20047199 | VALVE SECTION, L90 - LEVEL | 1 |
| 2 | 19213483 | PORT RV | 2 |
| 3 | 20068454 | SOLENOID | 2 |
| 4 | 23416 | B SIDE ACTUATOR CAP | 1 |
| 5 | 699170 | SUPPLY REDUCER | 1 |
| 6 | 23414 | EC2 KIT W/O LEVER SHAFT | 1 |
| | 19213584 | SPOOL **(NOT SHOWN)** | 1 |
| | 20047207 | COMPENSATOR **(NOT SHOWN)** | 1 |
| | 23404 | FACE SEAL KIT **(NOT SHOWN)** | 1 |

# H100-00188 - L90 MAIN VALVE SECTION - MAIN BOOM - HEAD ROTATE - (DISC SAW)

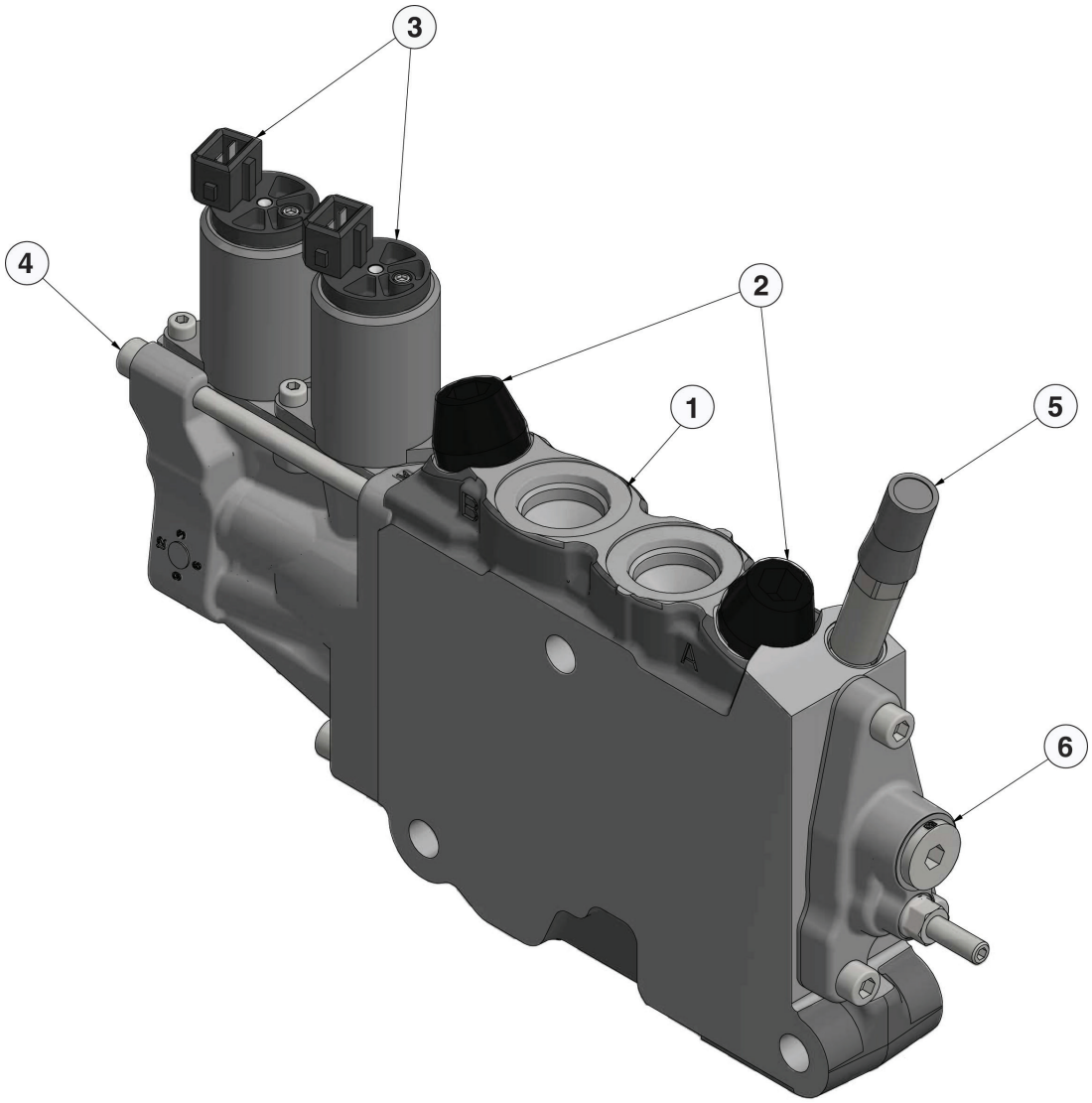


H-00160D 07/24

| Item | Part # | Description | Qty. |
|---|---|---|---|
| 1 | 20047199 | VALVE SECTION, L90 - HEAD ROTATE | 1 |
| 2 | 19213481 | PORT RV | 2 |
| 3 | 20068454 | SOLENOID | 2 |
| 4 | 23416 | B SIDE ACTUATOR CAP | 1 |
| 5 | 699170 | SUPPLY REDUCER | 1 |
| 6 | 23414 | EC2 KIT W/O LEVER SHAFT | 1 |
| | 19213577 | DOUBLE ACTING SPOOL **(NOT SHOWN)** | 1 |
| | 20047208 | COMPENSATOR **(NOT SHOWN)** | 1 |
| | 23404 | FACE SEAL KIT **(NOT SHOWN)** | 1 |

# H100-00189 - L90 VALVE SECTION - MAIN BOOM - OUTLET - (DISC SAW)

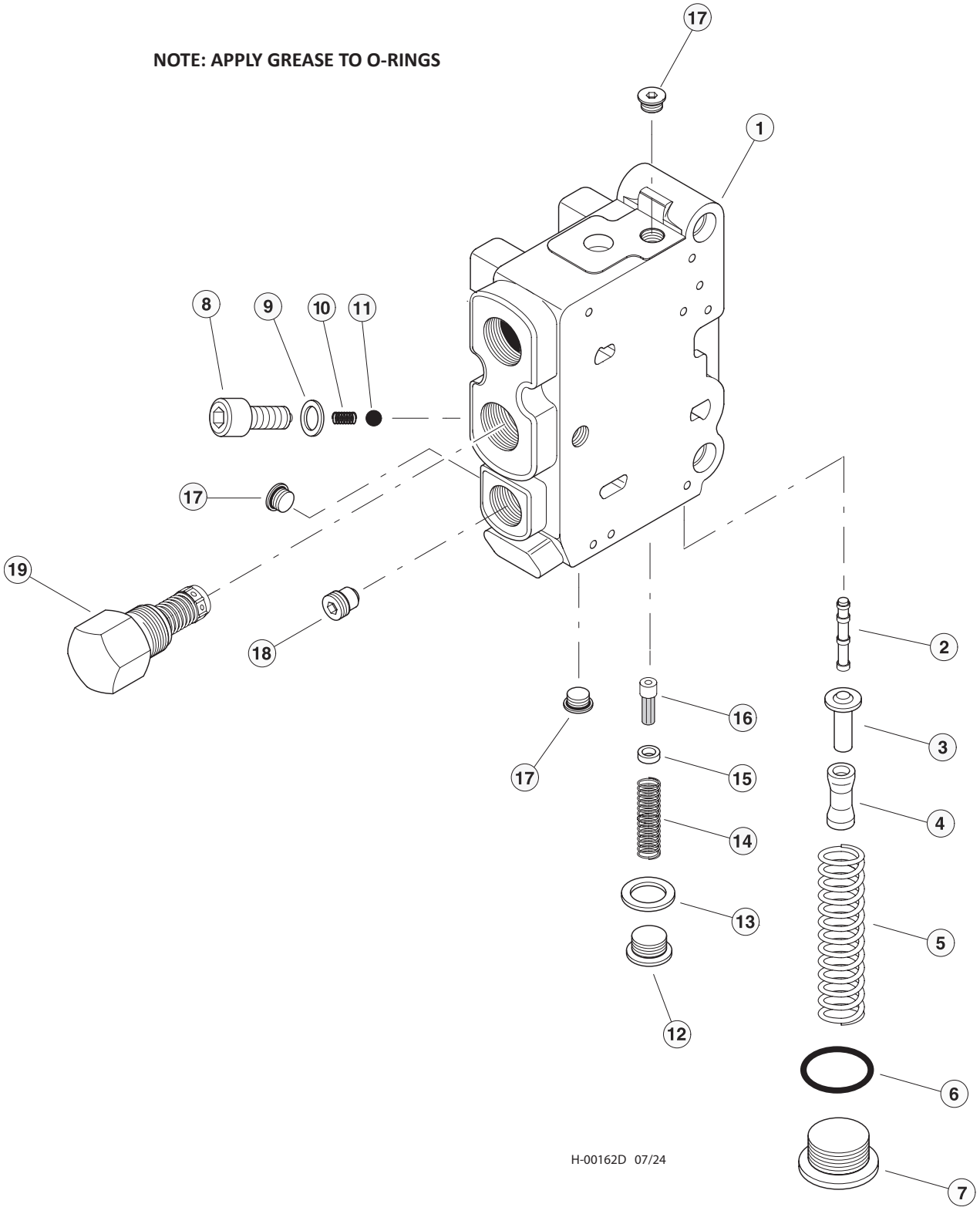

# H100-00189 - L90 VALVE SECTION - MAIN BOOM - OUTLET - (DISC SAW)

| Item | Part # | Description | Qty. |
|---|---|---|---|
| | 23412 | VALVE SECTION, OUTLET | 1 |
| 1 | **SEE DESCRIPTION** | BODY, VALVE SECTION CALL | 1 |
| | 23431 | KIT, PILOT SUPPLY REDUCER (GREEN)(35 BAR)(SEE NOTE #1) | 1 |
| | 23432 | KIT, PILOT SUPPLY REDUCER (RED)(35 BAR)(SEE NOTE #1) | 1 |
| 2 | **SEE DESCRIPTION** | SPOOL, PILOT REDUCER CALL | 1 |
| 3 | **SEE DESCRIPTION** | RETAINER, SPRING CALL | 1 |
| 4 | **SEE DESCRIPTION** | SPACER, SPRING CALL | 1 |
| 5 | **SEE DESCRIPTION** | SPRING CALL | 1 |
| 6 | 0663909901 | O-RING | 1 |
| 7 | 9126244413 | PLUG | 1 |
| 8 | 9127320022 | PLUG | 1 |
| 9 | 06611005 | RING, SEAL | 1 |
| 10 | **SEE DESCRIPTION** | SPRING CALL | 1 |
| 11 | **SEE DESCRIPTION** | BALL, CHECK CALL | 1 |
| | 23433 | KIT, PILOT SUPPLY STRAINER | 1 |
| 12 | 9127320020 | PLUG (9127320020) | 1 |
| 13 | 06611020 | RING, SEAL (06611020) | 1 |
| 14 | **SEE DESCRIPTION** | SPRING CALL | 1 |
| 15 | **SEE DESCRIPTION** | SPACER CALL | 1 |
| 16 | 9126386076 | STRAINER (9126386076) | 1 |
| 17 | 15412 | PLUG - 6408-FHP-6 | 3 |
| 18 | 393000K078 | PLUG, PILOT DRAIN | 1 |
| 19 | 393000K068 | COUNTER PRESS. VALVE - 130 PSI | 1 |

# H100-00200 - MAIN VALVE HYD. FITTINGS - DISC SAW/BAR SAW COMBO (NON-LEVELING)

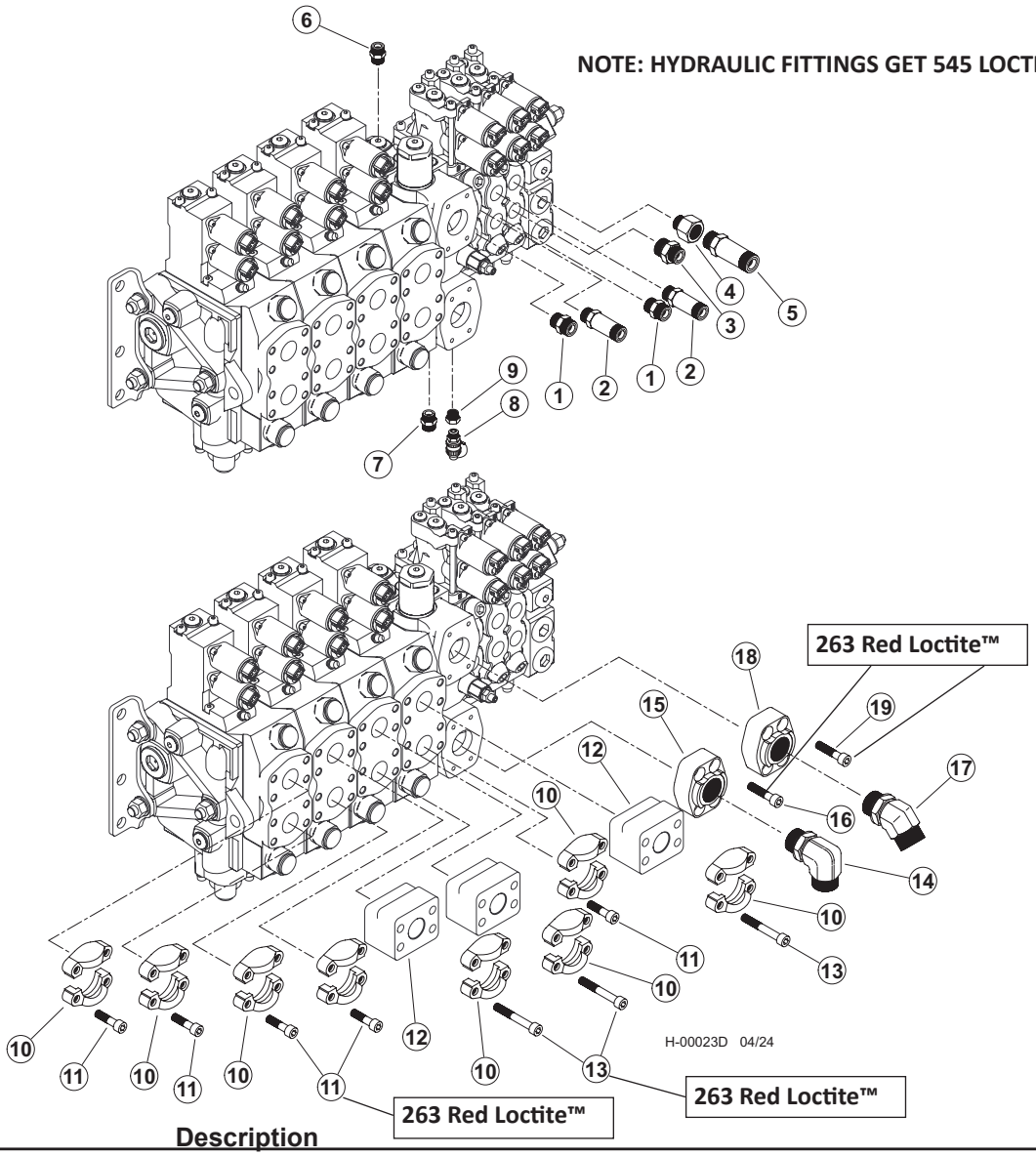


| Item | Part # | Description | Qty. |
|---|---|---|---|
| 1 | 50039 | CONNECTOR, STR - 848-TTO-10X10 | 2 |
| 2 | 52554 | CONNECTOR, STR LONG - 10X10 | 2 |
| 3 | 16851 | CONNECTOR, STR - FF1852T-1210S | 1 |
| 4 | 19289 | BUSHING, REDUCER - 6410-10X12 | 1 |
| 5 | 19092 | CONNECTOR, STR LONG - 848L-TTO-12X12 | 1 |
| 6 | 22901 | CONNECTOR, STR - 6-8 F5OLO-S | 1 |
| 7 | 18034 | CONNECTOR, STR - FF1852T-0606S | 1 |
| 8 | 57819 | TAP, GAUGE PORT - #4 SAE ORING BOSS- ST | 1 |
| 9 | 16294 | BUSHING, REDUCER - 6410-6-4 | 1 |
| 10 | 15111 | KIT, SPLIT FLANGE CODE 61 1 INCH | 8 |
| 11 | 20444 | BOLT, ALLEN HEAD - 10MM-1.5P X 35MM **263 RED LOCTITE™** | 12 |
| 12 | 46248 | MANIFOLD, VALVE BLOCK SAE 1” CODE 62 | 3 |
| 13 | 55664 | BOLT, ALLEN HEAD - 10MM-1.5P X 80MM **263 RED LOCTITE™** | 12 |
| 14 | 21143 | ELBOW, 90 - 20-16 C5OLO-S | 1 |
| 15 | 18397 | CONNECTOR, FLANGE PAD - W48-16-16U(C 62) | 1 |
| 16 | 18988 | BOLT, ALLEN HEAD - 12MM-1.75P X 45MM **263 RED LOCTITE™** | 4 |
| 17 | 57477 | FITTING, 20 V5OX-S | 1 |
| 18 | 17909 | CONNECTOR, FLANGE PAD-W46K-20-20 CODE 61 | 1 |
| 19 | 20444 | BOLT, ALLEN HEAD - 10MM-1.5P X 35MM **263 RED LOCTITE™** | 4 |

# H100-00210 - MAIN VALVE HYD. FITTINGS - DISC SAW/BAR SAW COMBO (LEVELING)

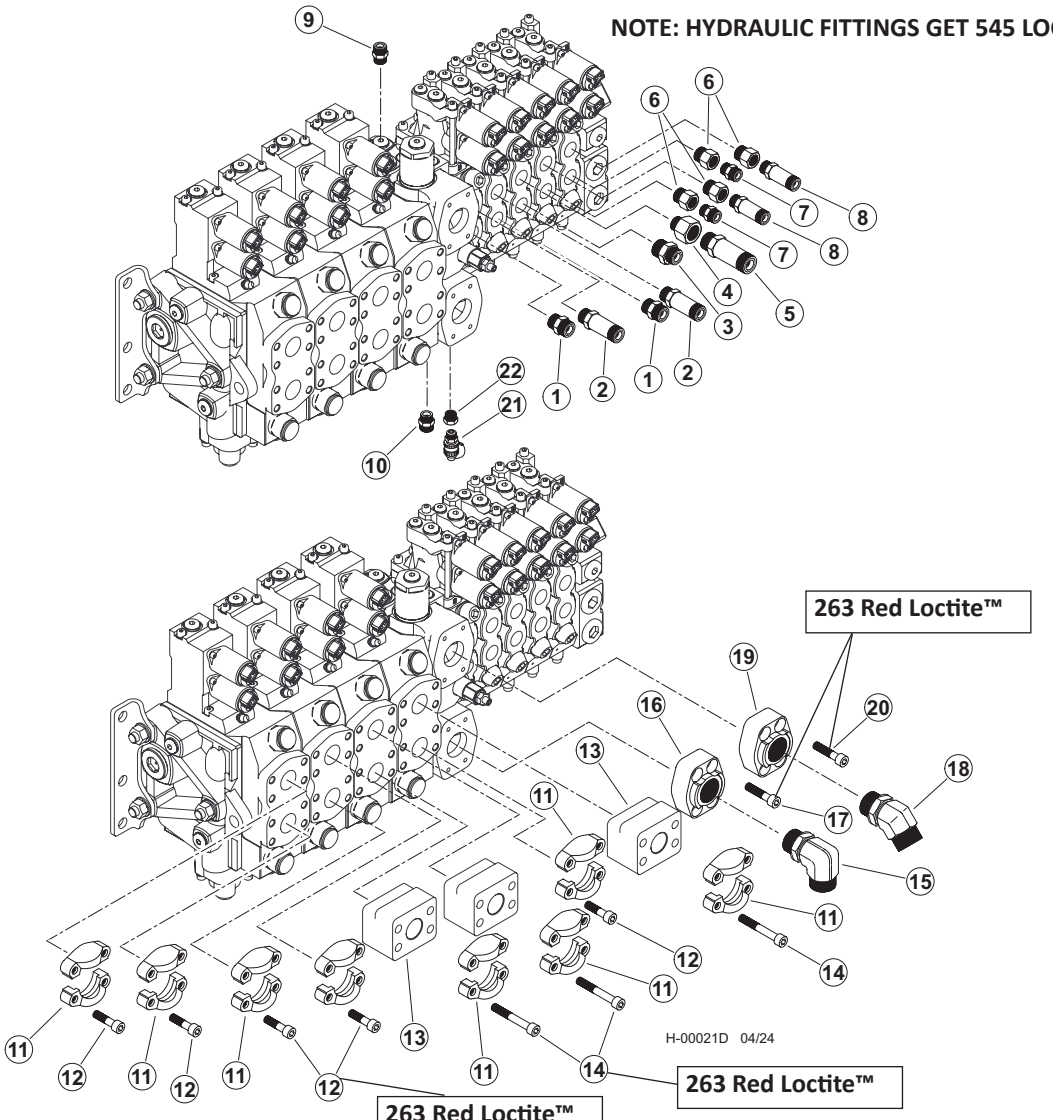


| Item | Part # | Description | Qty. |
|---|---|---|---|
| 1 | 50039 | CONNECTOR, STR - 848-TTO-10X10 | 2 |
| 2 | 52554 | CONNECTOR, STR LONG - 10X10 | 2 |
| 3 | 16851 | CONNECTOR, STR - FF1852T-1210S | 1 |
| 4 | 19289 | BUSHING, REDUCER - 6410-10X12 | 1 |
| 5 | 19092 | CONNECTOR, STR LONG - 848L-TTO-12X12 | 1 |
| 6 | 19290 | BUSHING, REDUCER - 6410-10-8 | 4 |
| 7 | 15117 | CONNECTOR, STR - FF1852T-0808S | 2 |
| 8 | 19091 | CONNECTOR, STR LONG - 848L-TTO-08X08 | 2 |
| 9 | 22901 | CONNECTOR, STR - 6-8 F5OLO-S | 1 |
| 10 | 18034 | CONNECTOR, STR - FF1852T-0606S | 1 |
| 11 | 15111 | KIT, SPLIT FLANGE CODE 61 1 INCH | 12 |
| 12 | 20444 | BOLT, ALLEN HEAD - 10MM-1.5P X 35MM **263 RED LOCTITE™** | 12 |
| 13 | 46248 | MANIFOLD, VALVE BLOCK SAE 1" CODE 62 | 3 |
| 14 | 55664 | BOLT, ALLEN HEAD - 10MM-1.5P X 80MM **263 RED LOCTITE™** | 12 |
| 15 | 21143 | ELBOW, 90 - 20-16 C5OLO-S | 1 |
| 16 | 18397 | CONNECTOR, FLANGE PAD - W48-16-16U(C 62) | 1 |
| 17 | 18988 | BOLT, ALLEN HEAD - 12MM-1.75P X 45MM **263 RED LOCTITE™** | 4 |
| 18 | 57477 | FITTING, 20 V5OX-S | 1 |
| 19 | 17909 | CONNECTOR, FLANGE PAD-W46K-20-20 CODE 61 | 1 |
| 20 | 20444 | BOLT, ALLEN HEAD - 10MM-1.5P X 35MM **263 RED LOCTITE™** | 4 |
| 21 | 57819 | TAP, GAUGE PORT - #4 SAE ORING BOSS- ST | 1 |
| 22 | 16294 | BUSHING, REDUCER - 6410-6-4 | 1 |

# H100-00211 - MAIN VALVE COMPONENTS - DISC SAW/BAR SAW COMBO

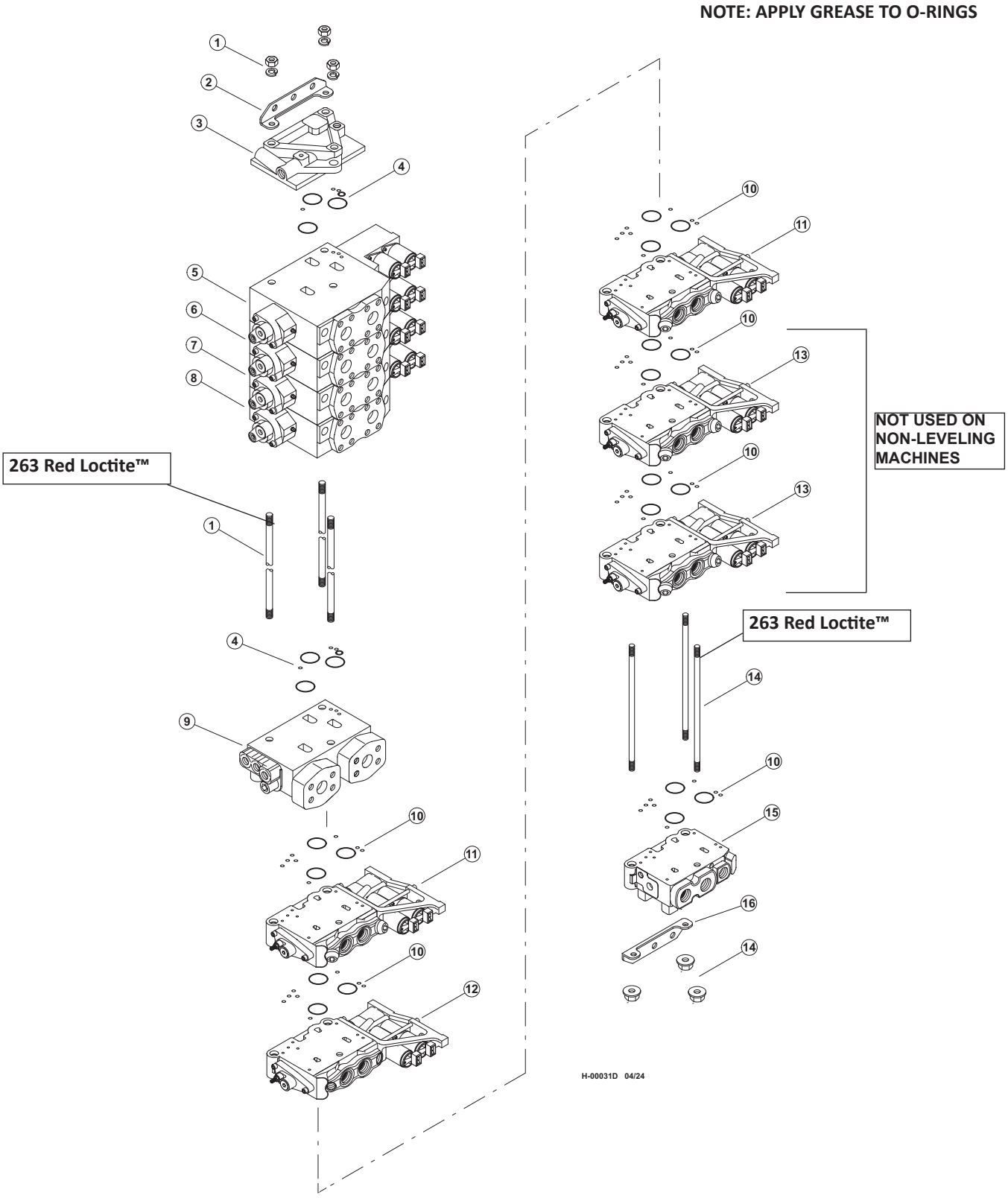

# H100-00211 - MAIN VALVE COMPONENTS - DISC SAW/BAR SAW COMBO

| Item | Part # | Description | Qty. |
|---|---|---|---|
| | **57984** | **VALVE, MAIN 4K220/5L90 - DISC SAW/BAR SAW COMBO - LEVELING** | |
| | **57988** | **VALVE, MAIN 4K220/3L90 - DISC SAW/BAR SAW COMBO - NON-LEVELING** | |
| 1 | **SEE DESCRIPTION** | ROD, TIE - K220 (4-SECTION SPAN) **263 Red Loctite™ (CALL)** | 1 |
| 2 | **SEE DESCRIPTION** | KIT, BRACKET - K220 **(CALL)** | 1 |
| 3 | **SEE DESCRIPTION** | END COVER, K220 VALVE (US) **(CALL)** | 1 |
| 4 | 24649 | KIT, SEALS - VOAC INTERSECTION (9120092315) | 5 |
| 5 | **SEE DESCRIPTION** | VALVE SECTION, K220 - STICK BOOM (MR) **(CALL)** | 1 |
| 6 | **SEE DESCRIPTION** | VALVE SECTION, K220 - TOOL TILT (MR) **(CALL)** | 1 |
| 7 | **SEE DESCRIPTION** | VALVE SECTION, K220 - SAW (MR) **(CALL)** | 1 |
| 8 | **SEE DESCRIPTION** | VALVE SECTION, K220 - MAIN BOOM (MR) **(CALL)** | 1 |
| 9 | **SEE DESCRIPTION** | INLET SECTION **(CALL)** | 11 |
| 10 | 23404 | KIT, SEAL REPAIR - L90LS FACE | 4/6 |
| 11 | **SEE DESCRIPTION** | VALVE SECTION, L90 - ACCUMULATOR/CLAMP (TCT) **(CALL)** | 2 |
| 12 | **SEE DESCRIPTION** | VALVE SECTION, L90 - HEAD ROTATE (TCT) **(CALL)** | 1 |
| 13 | **SEE DESCRIPTION** | VALVE SECTION, L90 - CAB LEVEL (TCT) **(CALL)** | 2 |
| 14 | **SEE DESCRIPTION** | TIE ROD KIT - 3 SECTION - L90 (NON-LEVELING) **263 RED LOCTITE™ (CALL)** | 1 |
| 14 | **SEE DESCRIPTION** | TIE ROD KIT - 5 SECTION - L90 (LEVELING) **(CALL)** | 1 |
| 15 | **SEE DESCRIPTION** | OUTLET (US) **(CALL)** | 1 |
| 16 | **SEE DESCRIPTION** | KIT, BRACKET - L90 **(CALL)** | 1 |

# H100-00212 - K220 MAIN VALVE SECTION - STICK BOOM - (DISC SAW/BAR SAW COMBO)

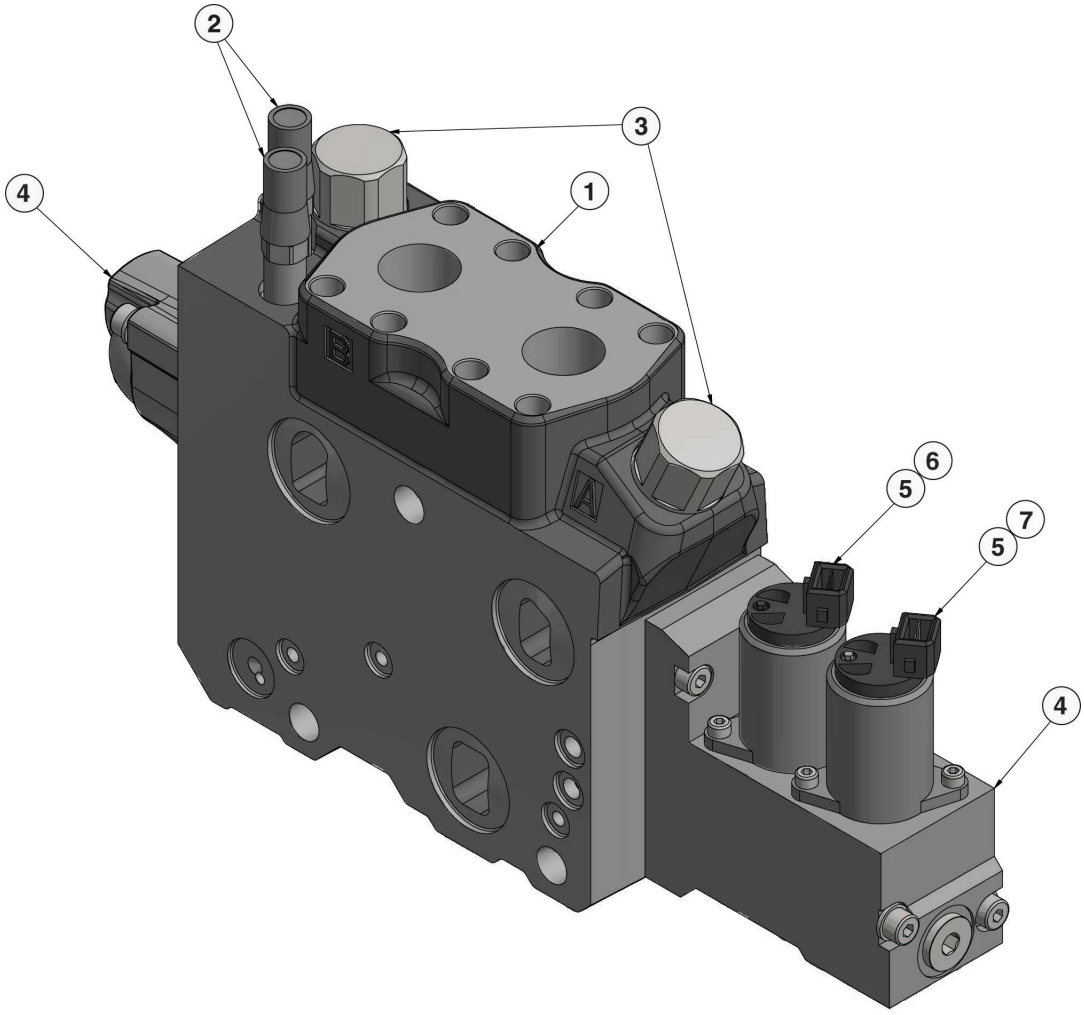


H-00157D 07/24

| Item | Part # | Description | Qty. |
|---|---|---|---|
| 1 | 699210 | VALVE SECTION, STICK - K220 | 1 |
| 2 | 69170 | SUPPLY REDUCER | 2 |
| 3 | 56161 | PORT RELIEF VALVE | 2 |
| 4 | 26424 | CAP KIT | 1 |
| 5 | 20976 | SOLENOID | 2 |
| 6 | 19213043 | PILOT ORIFICE | 1 |
| 7 | 19213046 | PILOT ORIFICE | 1 |
| | 20045380 | SPOOL **(NOT SHOWN)** | 1 |
| | 19217319 | COMPENSATOR **(NOT SHOWN)** | 1 |
| | 24649 | FACE SEAL KIT **(NOT SHOWN)** | 1 |

# H100-00213 - K220 MAIN VALVE SECTION - TOOL TILT - (DISC SAW/BAR SAW COMBO)

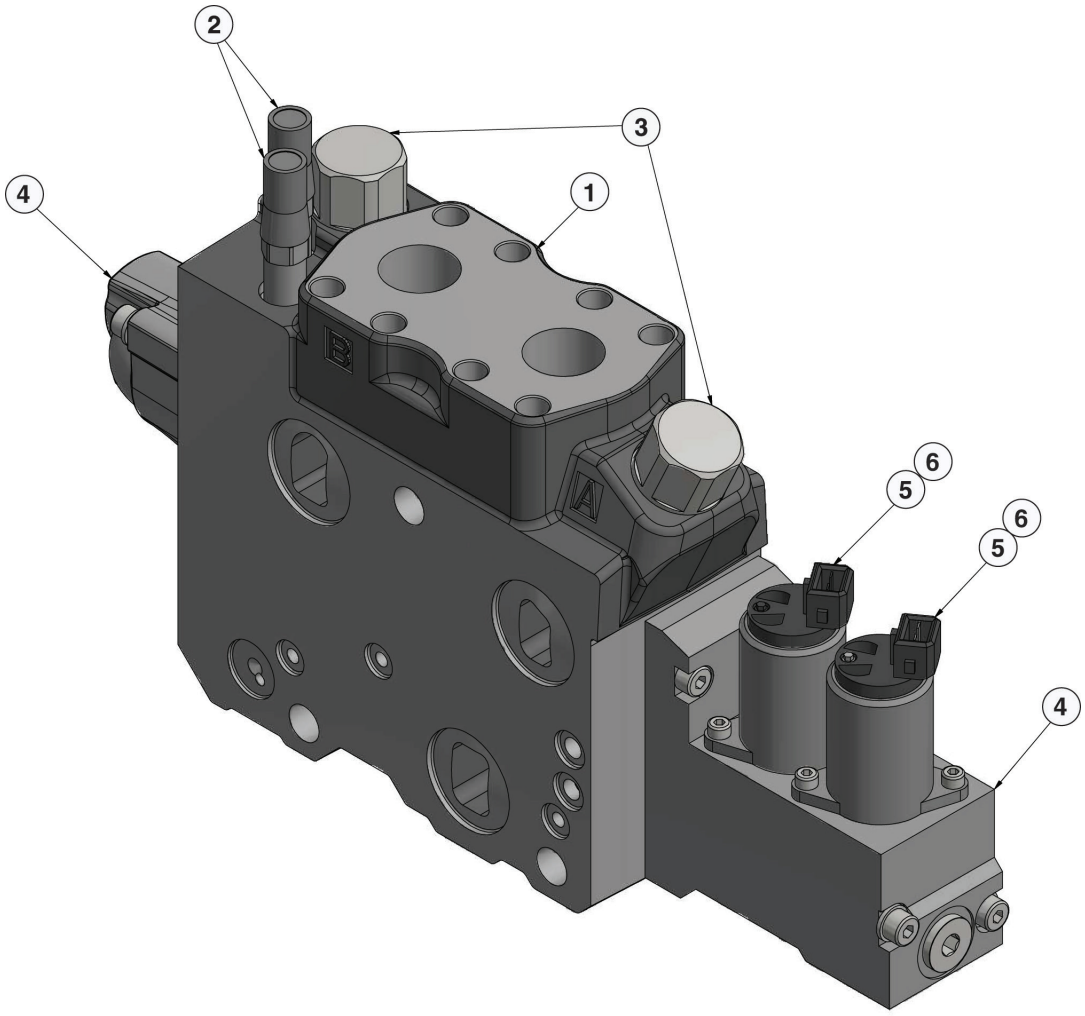


H-00158D 07/24

| Item | Part # | Description | Qty. |
|---|---|---|---|
| 1 | 699210 | VALVE SECTION, TOOL TILT - K220 | 1 |
| 2 | 699170 | SUPPLY REDUCER | 2 |
| 3 | 56161 | PORT RELIEF VALVE | 2 |
| 4 | 26424 | CAP KIT | 1 |
| 5 | 20976 | SOLENOID | 2 |
| 6 | 19213043 | PILOT ORIFICE | 1 |
| | 19217324 | SPOOL **(NOT SHOWN)** | 1 |
| | 19215648 | COMPENSATOR **(NOT SHOWN)** | 1 |
| | 24649 | FACE SEAL KIT **(NOT SHOWN)** | 1 |

# H100-00214 - K220 MAIN VALVE SECTION - SAW - (DISC SAW/BAR SAW COMBO)

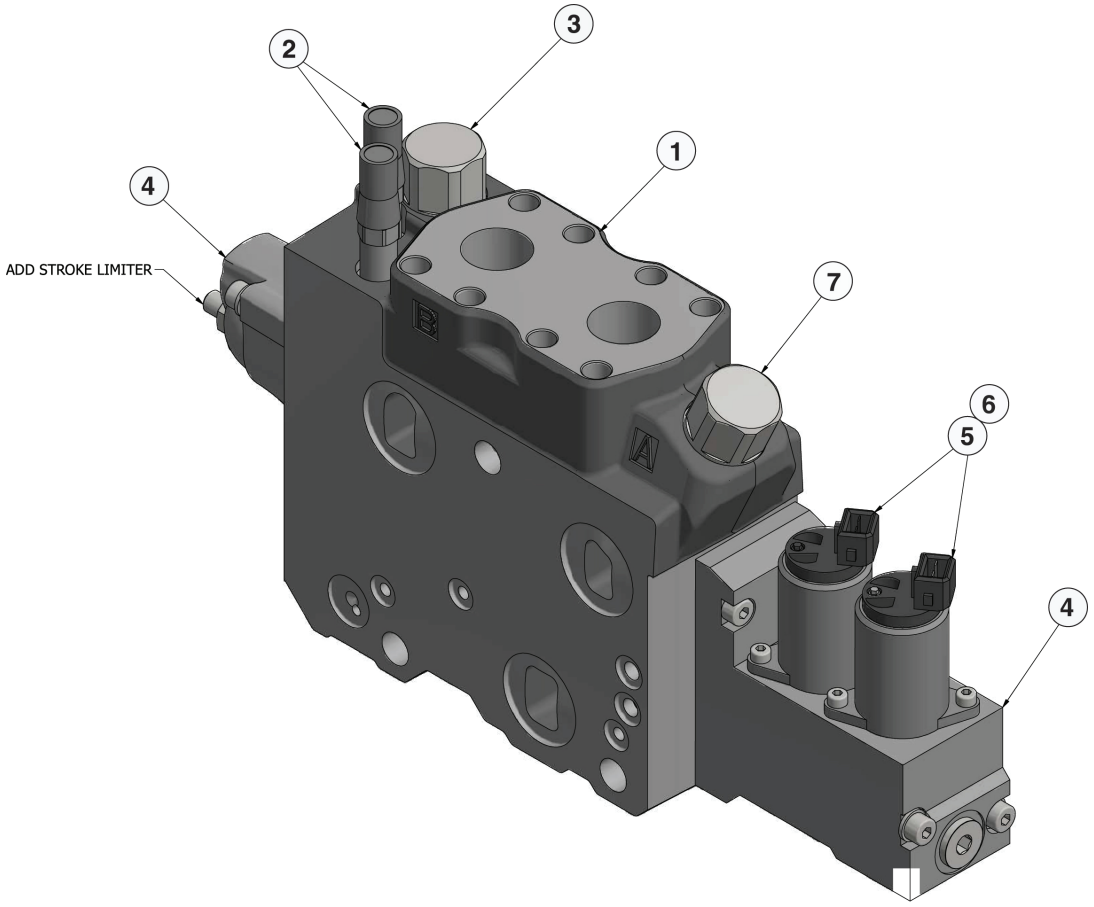


H-00161D 07/24

| Item | Part # | Description | Qty. |
|---|---|---|---|
| 1 | 699210 | VALVE SECTION, SAW - K220 | 1 |
| 2 | 699170 | SUPPLY REDUCER | 2 |
| 3 | 19217273 | PORT RELIEF VALVE | 2 |
| 4 | 26424 | CAP KIT | 1 |
| 5 | 20068454 | SOLENOID | 2 |
| 6 | 19213047 | PILOT ORIFICE | 1 |
| 7 | 56472 | PORT RELIEF VALVE | 1 |
| | 51356 | SPOOL **(NOT SHOWN)** | 1 |
| | 54582 | COMPENSATOR **(NOT SHOWN)** | 1 |
| | 24649 | FACE SEAL KIT **(NOT SHOWN)** | 1 |

# H100-00215 - K220 MAIN VALVE SECTION - MAIN BOOM - (DISC SAW/BAR SAW COMBO)

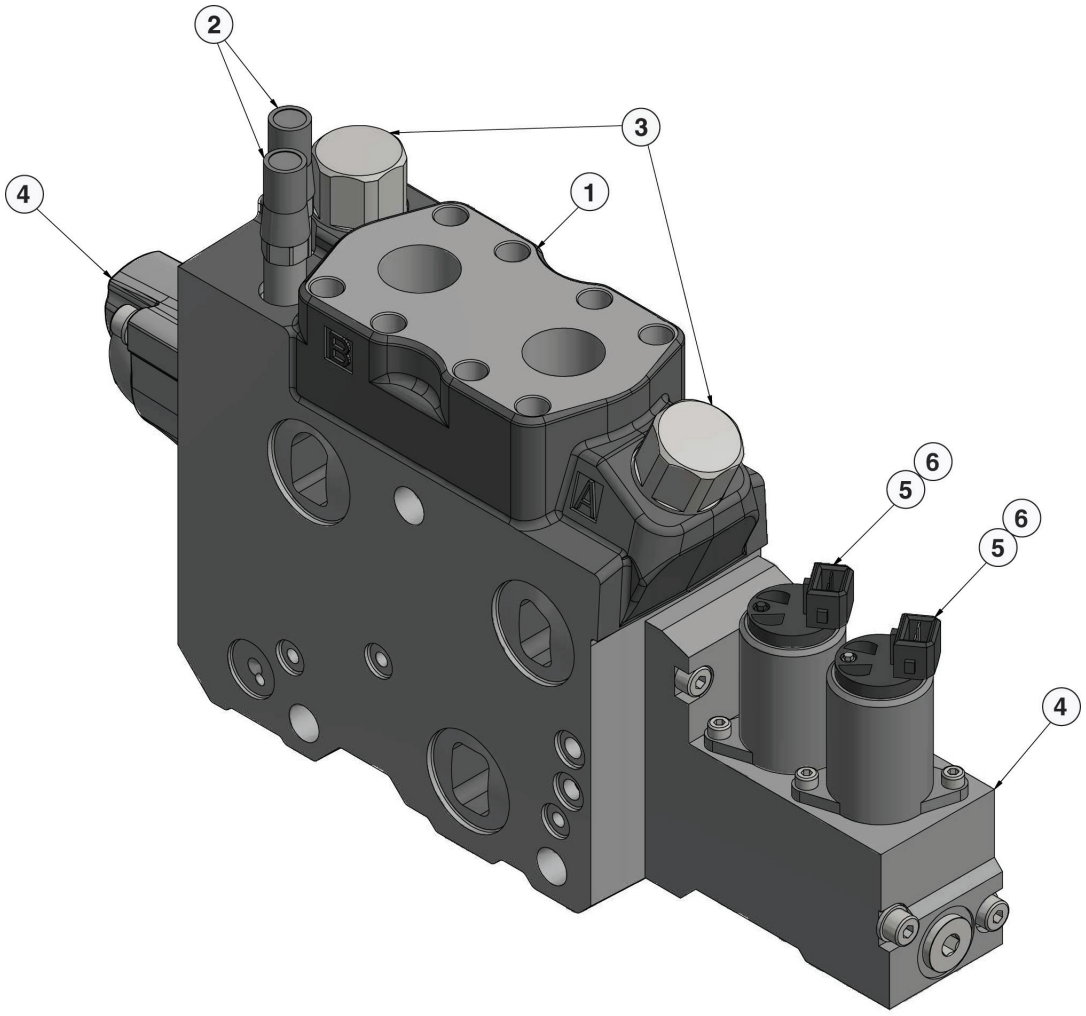


H-00158D 07/24

| Item | Part # | Description | Qty. |
|---|---|---|---|
| 1 | 699210 | VALVE SECTION, MAIN BOOM - K220 | 1 |
| 2 | 699170 | SUPPLY REDUCER | 2 |
| 3 | 56161 | PORT RELIEF VALVE | 2 |
| 4 | 26424 | CAP KIT | 1 |
| 5 | 20976 | SOLENOID | 2 |
| 6 | 19213046 | PILOT ORIFICE | 1 |
| | 19215707 | SPOOL **(NOT SHOWN)** | 1 |
| | 19215649 | COMPENSATOR **(NOT SHOWN)** | 1 |
| | 24649 | FACE SEAL KIT **(NOT SHOWN)** | 1 |

# H100-00216 - K220 MAIN VALVE SECTION - INLET - (DISC SAW/BAR SAW COMBO)

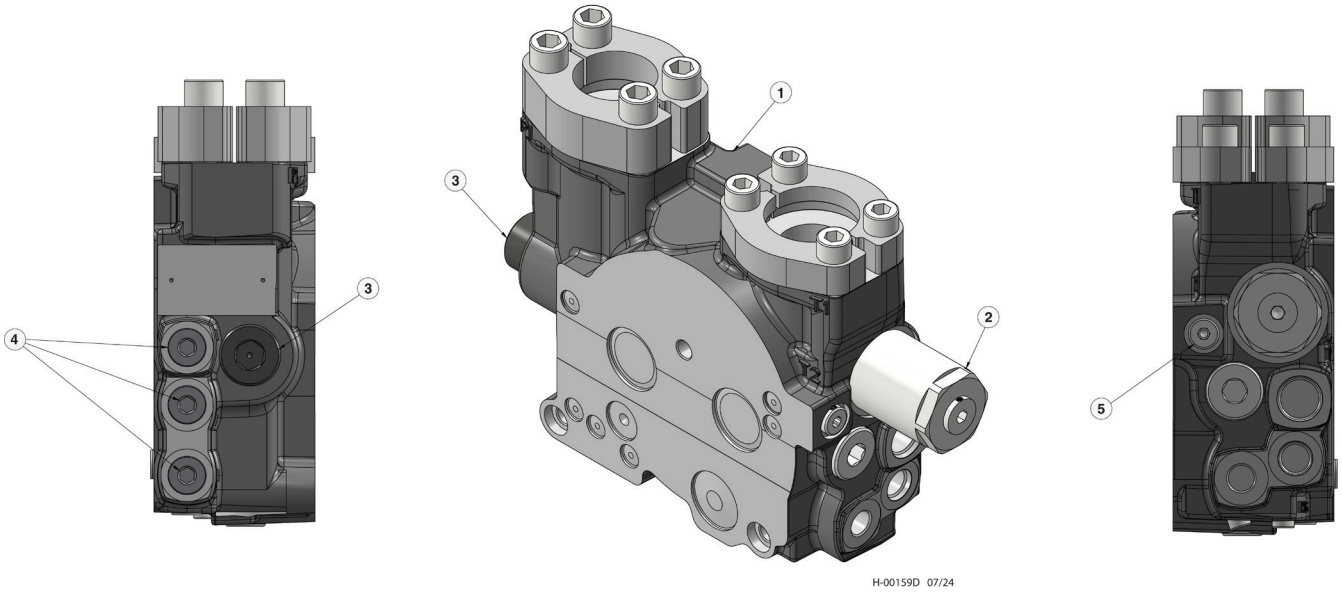


| Item | Part # | Description | Qty. |
|---|---|---|---|
| | 20089048 | INLET SECTION | 1 |
| 1 | 20089023 | COMBO LS INLET | 1 |
| 2 | 19217259 | COUNTER PRESSURE VLV | 1 |
| 3 | 19217256 | RELIEF MAIN | 3 |
| 4 | 19215123 | PLUG | 1 |
| 5 | 19206051 | SCREW | 1 |

# H100-00217 - L90 MAIN VALVE SECTION - ACCUMULATOR & CLAMP (DISC SAW/BAR SAW COMBO)

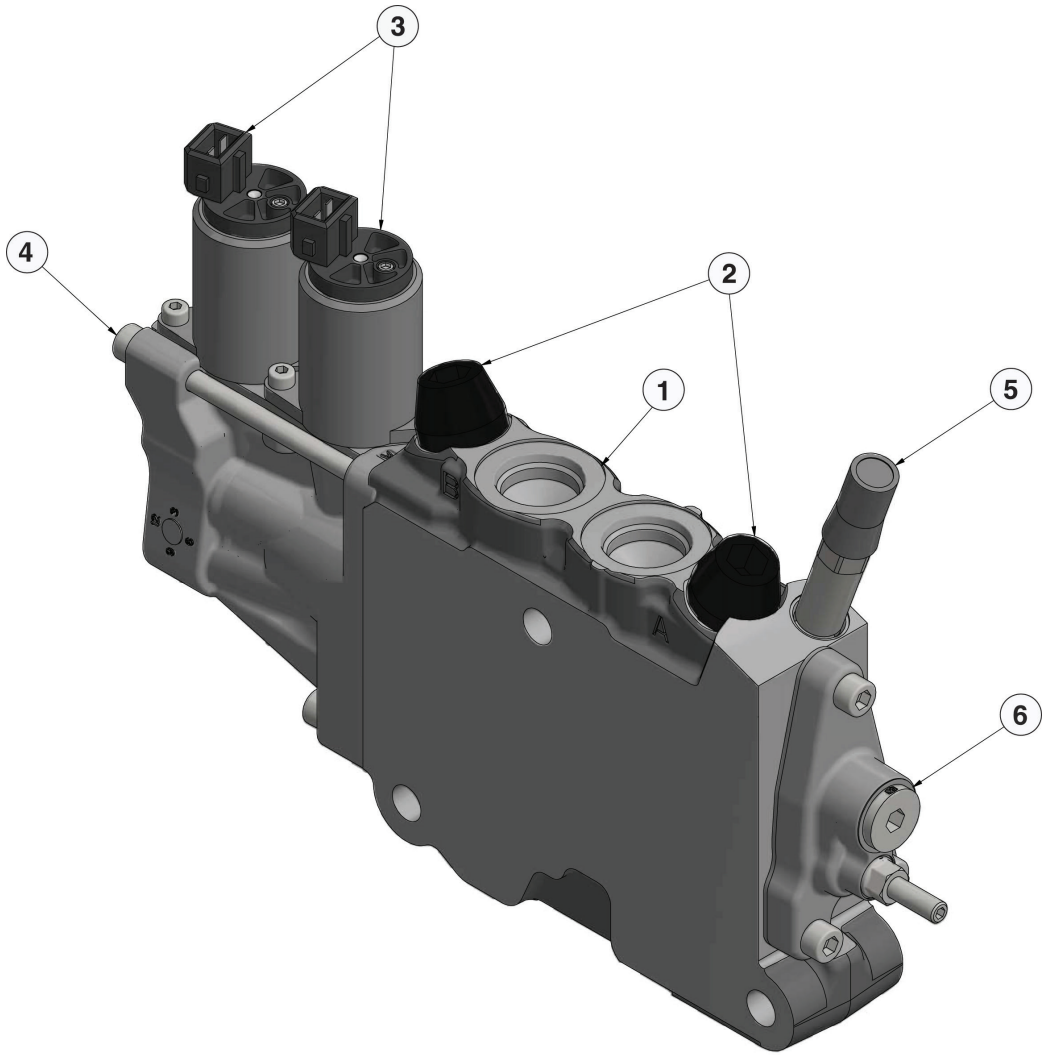


H-00160D 07/24

| Item | Part # | Description | Qty. |
|---|---|---|---|
| 1 | 20047199 | VALVE SECTION, L90 - ACCUMULATOR/CLAMP | 1 |
| 2 | 51528 | PORT RV | 2 |
| 3 | 20068454 | SOLENOID | 2 |
| 4 | 23416 | B SIDE ACTUATOR CAP | 1 |
| 5 | 699170 | SUPPLY REDUCER | 1 |
| 6 | 23414 | EC2 KIT W/O LEVER SHAFT | 1 |
| | 19213586 | SPOOL **(NOT SHOWN)** | 1 |
| | 20047208 | COMPENSATOR **(NOT SHOWN)** | 1 |
| | 23404 | FACE SEAL KIT **(NOT SHOWN)** | 1 |

# H100-00218 - L90 MAIN VALVE SECTION - HEAD ROTATE - (DISC SAW/BAR SAW COMBO)

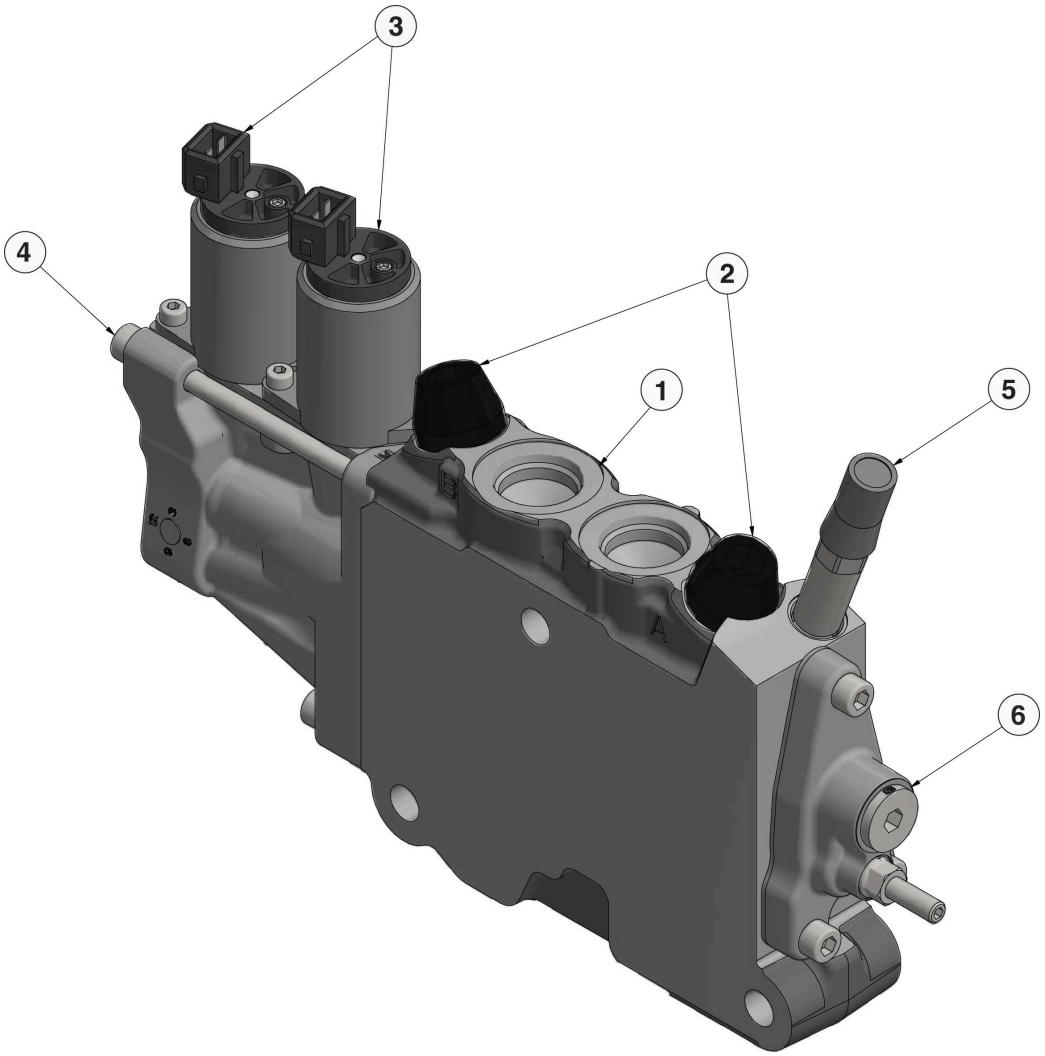


H-00160D 07/24

| Item | Part # | Description | Qty. |
|---|---|---|---|
| 1 | 20047199 | VALVE SECTION, L90 - HEAD ROTATE | 1 |
| 2 | 19213481 | PORT RV | 2 |
| 3 | 20068454 | SOLENOID | 2 |
| 4 | 23416 | B SIDE ACTUATOR CAP | 1 |
| 5 | 20068455 | SUPPLY REDUCER | 1 |
| 6 | 23414 | EC2 KIT W/O LEVER SHAFT | 1 |
| | 19213577 | DOUBLE ACTING SPOOL **(NOT SHOWN)** | 1 |
| | 20047208 | COMPENSATOR **(NOT SHOWN)** | 1 |
| | 23404 | FACE SEAL KIT | 1 |

# H100-00219 - L90 MAIN VALVE SECTION - CAB LEVEL - (DISC SAW/BAR SAW COMBO)

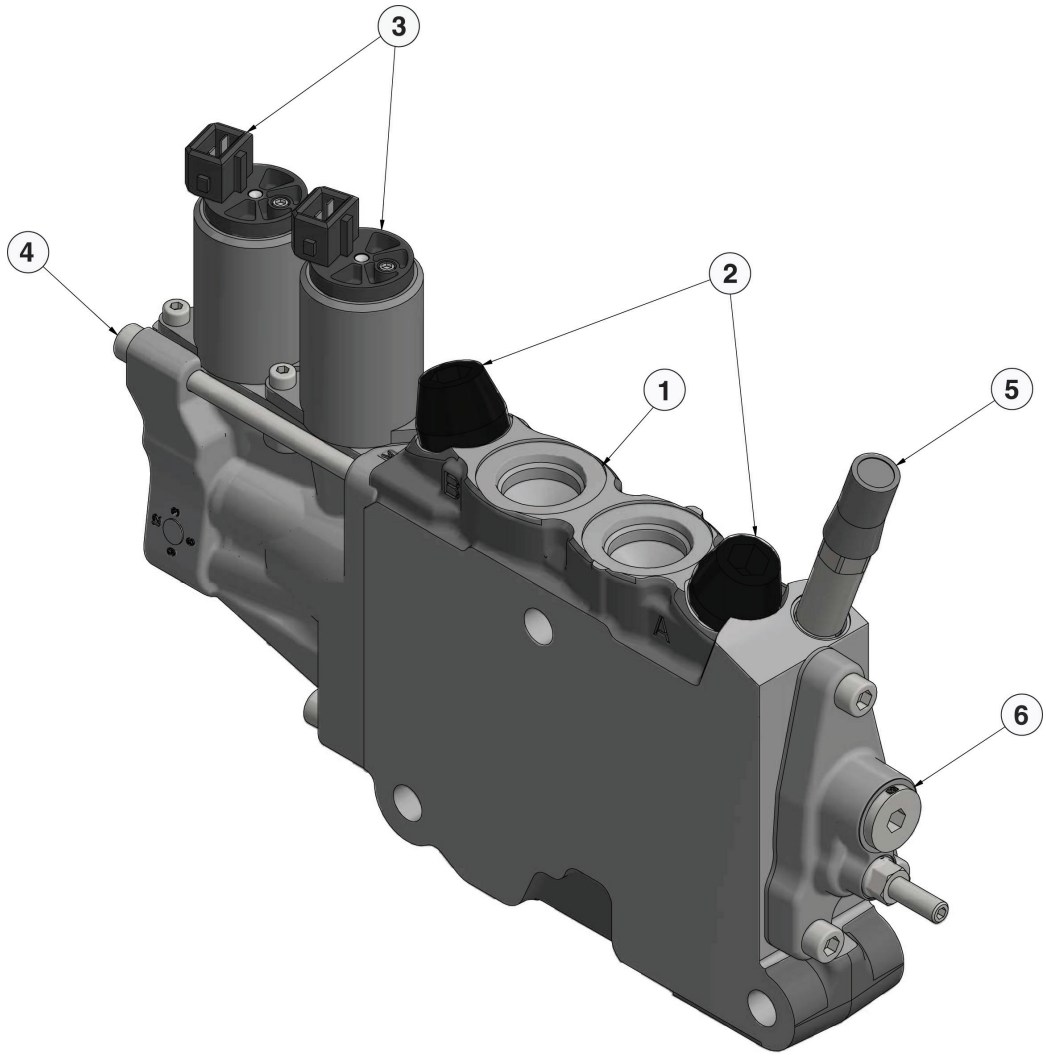


H-00160D 07/24

| Item | Part # | Description | Qty. |
|---|---|---|---|
| 1 | 20047199 | VALVE SECTION, L90 - LEVEL | 1 |
| 2 | 19213483 | PORT RV | 2 |
| 3 | 20068454 | SOLENOID | 2 |
| 4 | 23416 | B SIDE ACTUATOR CAP | 1 |
| 5 | 699170 | SUPPLY REDUCER | 1 |
| 6 | 23414 | EC2 KIT W/O LEVER SHAFT | 1 |
| | 19213584 | SPOOL **(NOT SHOWN)** | 1 |
| | 20047207 | COMPENSATOR **(NOT SHOWN)** | 1 |
| | 23404 | FACE SEAL KIT **(NOT SHOWN)** | 1 |

# H100-00220 - L90 VALVE SECTION - MAIN BOOM - OUTLET (DISC SAW/BAR SAW COMBO)

**NOTE: APPLY GREASE TO O-RINGS**

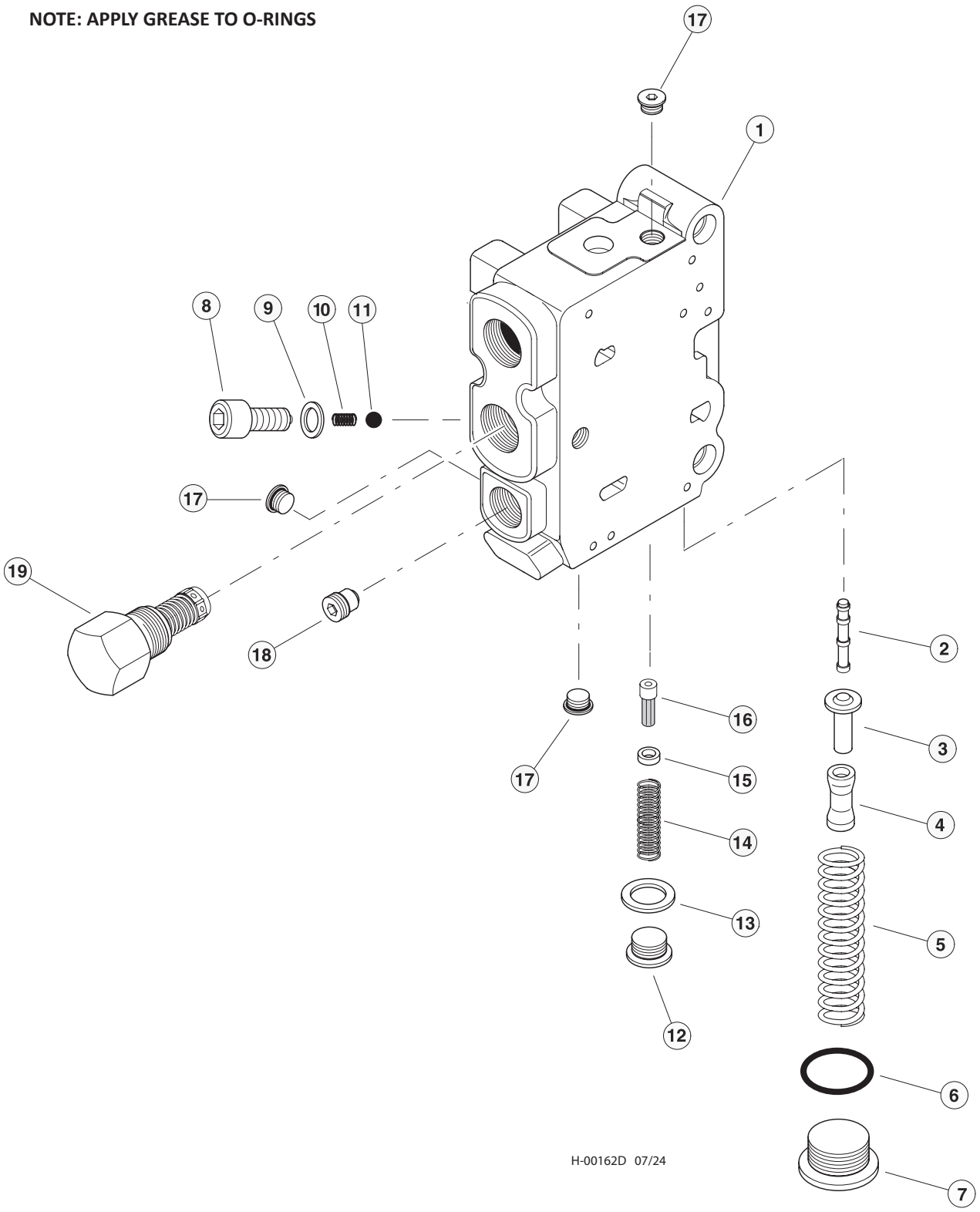

# H100-00220 - L90 VALVE SECTION - MAIN BOOM - OUTLET (DISC SAW/BAR SAW COMBO)

| Item | Part # | Description | Qty. |
|---|---|---|---|
| | 23412 | VALVE SECTION, OUTLET | 1 |
| 1 | SEE DESCRIPTION | BODY, VALVE SECTION **(CALL)** | 1 |
| | 23431 | KIT, PILOT SUPPLY REDUCER (GREEN)(35 BAR)(SEE NOTE #1) | 1 |
| | 23432 | KIT, PILOT SUPPLY REDUCER (RED)(35 BAR)(SEE NOTE #1) | 1 |
| 2 | SEE DESCRIPTION | SPOOL, PILOT REDUCER **(CALL)** | 1 |
| 3 | SEE DESCRIPTION | RETAINER, SPRING **(CALL)** | 1 |
| 4 | SEE DESCRIPTION | SPACER, SPRING **(CALL)** | 1 |
| 5 | SEE DESCRIPTION | SPRING **(CALL)** | 1 |
| 6 | 0663909901 | O-RING | 1 |
| 7 | 9126244413 | PLUG | 1 |
| 8 | 9127320022 | PLUG | 1 |
| 9 | 06611005 | RING, SEAL | 1 |
| 10 | SEE DESCRIPTION | SPRING | 1 |
| 11 | SEE DESCRIPTION | BALL, CHECK | 1 |
| | 23433 | KIT, PILOT SUPPLY STRAINER | 1 |
| 12 | 9127320020 | PLUG | 1 |
| 13 | 06611020 | RING, SEAL | 1 |
| 14 | SEE DESCRIPTION | SPRING **(CALL)** | 1 |
| 15 | SEE DESCRIPTION | SPACER **(CALL)** | 1 |
| 16 | **9126386076** | STRAINER | 1 |
| 17 | **15412** | PLUG - 6408-FHP-6 | 3 |
| 18 | **393000K078** | PLUG, PILOT DRAIN | 1 |
| 19 | **393000K068** | COUNTER PRESS. VALVE - 130 PSI | 1 |

# H100-00230 - MAIN VALVE HYD. FITTINGS - CONTROL FALL PROCESSOR (LEVELING)

**NOTE: HYDRAULIC FITTINGS GET 545 LOCTITE™**

**NOTE: APPLY GREASE TO O-RINGS**

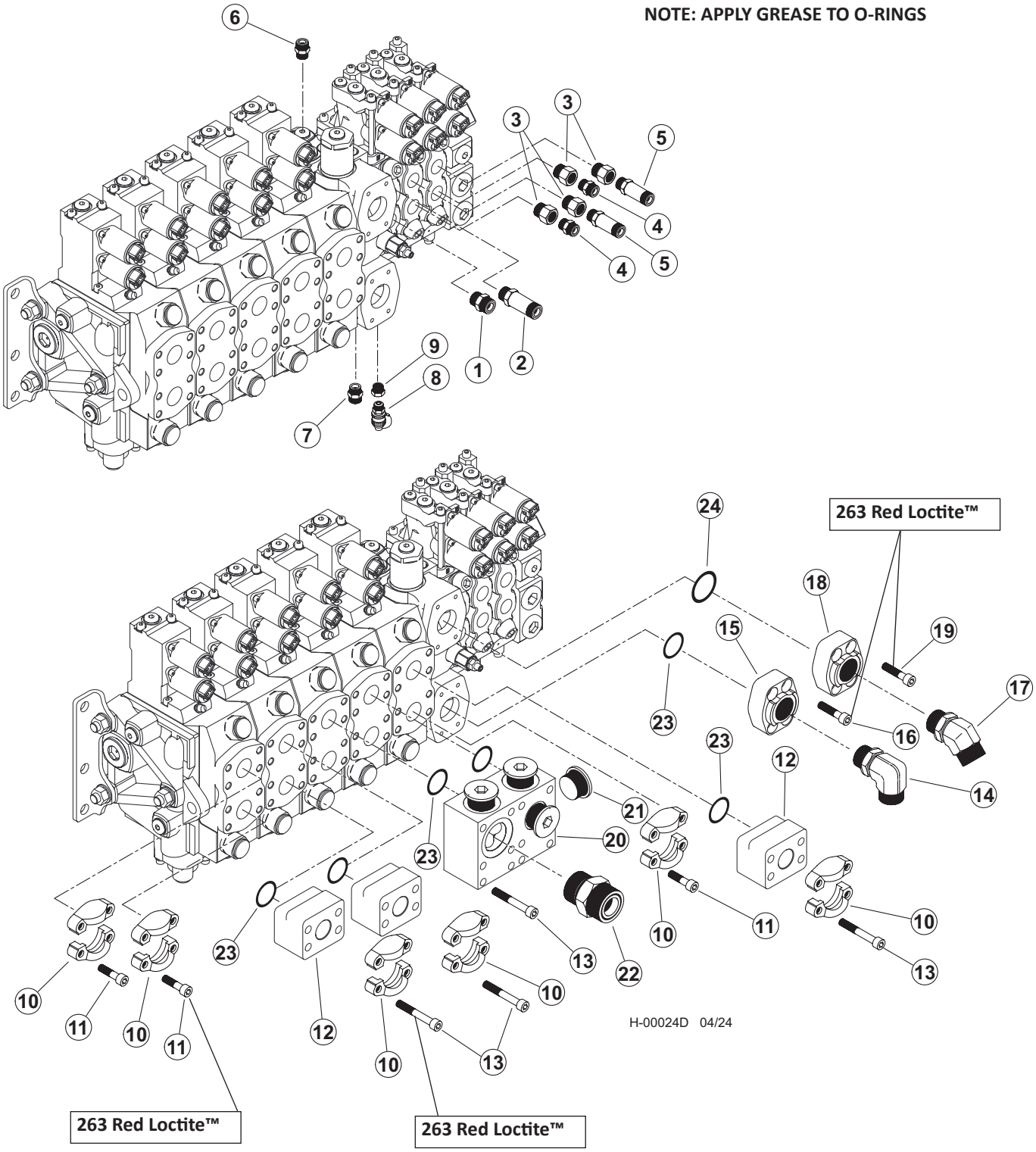

# H100-00230 - MAIN VALVE HYD. FITTINGS - CONTROL FALL PROCESSOR (LEVELING)

| Item | Part # | Description | Qty. |
|---|---|---|---|
| 1 | 50039 | CONNECTOR, STR - 848-TTO-10X10 | 1 |
| 2 | 52554 | CONNECTOR, STR LONG - 10X10 | 1 |
| 3 | 19290 | BUSHING, REDUCER - 6410-10-8 | 4 |
| 4 | 15117 | CONNECTOR, STR - FF1852T-0808S | 2 |
| 5 | 19091 | CONNECTOR, STR LONG - 848L-TTO-08X08 | 2 |
| 6 | 22901 | CONNECTOR, STR - 6-8 F5OLO-S | 1 |
| 7 | 18034 | CONNECTOR, STR - FF1852T-0606S | 1 |
| 8 | 57819 | TAP, GAUGE PORT - #4 SAE ORING BOSS- ST | 1 |
| 9 | 16294 | BUSHING, REDUCER - 6410-6-4 | 1 |
| 10 | 15111 | KIT, SPLIT FLANGE CODE 61 1 INCH | 6 |
| 11 | 20444 | BOLT, ALLEN HEAD - 10MM-1.5P X 35MM **263 RED LOCTITE™** | 24 |
| 12 | 46248 | MANIFOLD, VALVE BLOCK SAE 1” CODE 62 | 3 |
| 13 | 55664 | BOLT, ALLEN HEAD - 10MM-1.5P X 80MM **263 RED LOCTITE™** | 24 |
| 14 | 21143 | ELBOW, 90 - 20-16 C5OLO-S | 1 |
| 15 | 18397 | CONNECTOR, FLANGE PAD - W48-16-16U(C 62) | 1 |
| 16 | 18988 | BOLT, ALLEN HEAD - 12MM-1.75P X 45MM **263 RED LOCTITE™** | 4 |
| 17 | 57477 | FITTING, 20 V5OX-S | 1 |
| 18 | 17909 | CONNECTOR, FLANGE PAD-W46K-20-20 CODE 61 | 1 |
| 19 | 20444 | BOLT, ALLEN HEAD - 10MM-1.5P X 35MM **263 RED LOCTITE™** | 4 |
| 20 | 47890 | MANIFOLD, COMBINED FLOW - DUAL K220 | 1 |
| 21 | 19847 | PLUG - 6408-HHP-16 | 4 |
| 22 | 57492 | FITTING, 20 F5OX-S | 1 |
| 23 | 15377 | O-RING - 1” SF (CODE 61/62) | 8 |
| 24 | 15378 | O-RING - 1.25” SF (CODE 61/62) | 1 |

# H100-00240 - MAIN VALVE HYD. FITTINGS - CONTROL FALL PROCESSOR (NON-LEVELING)

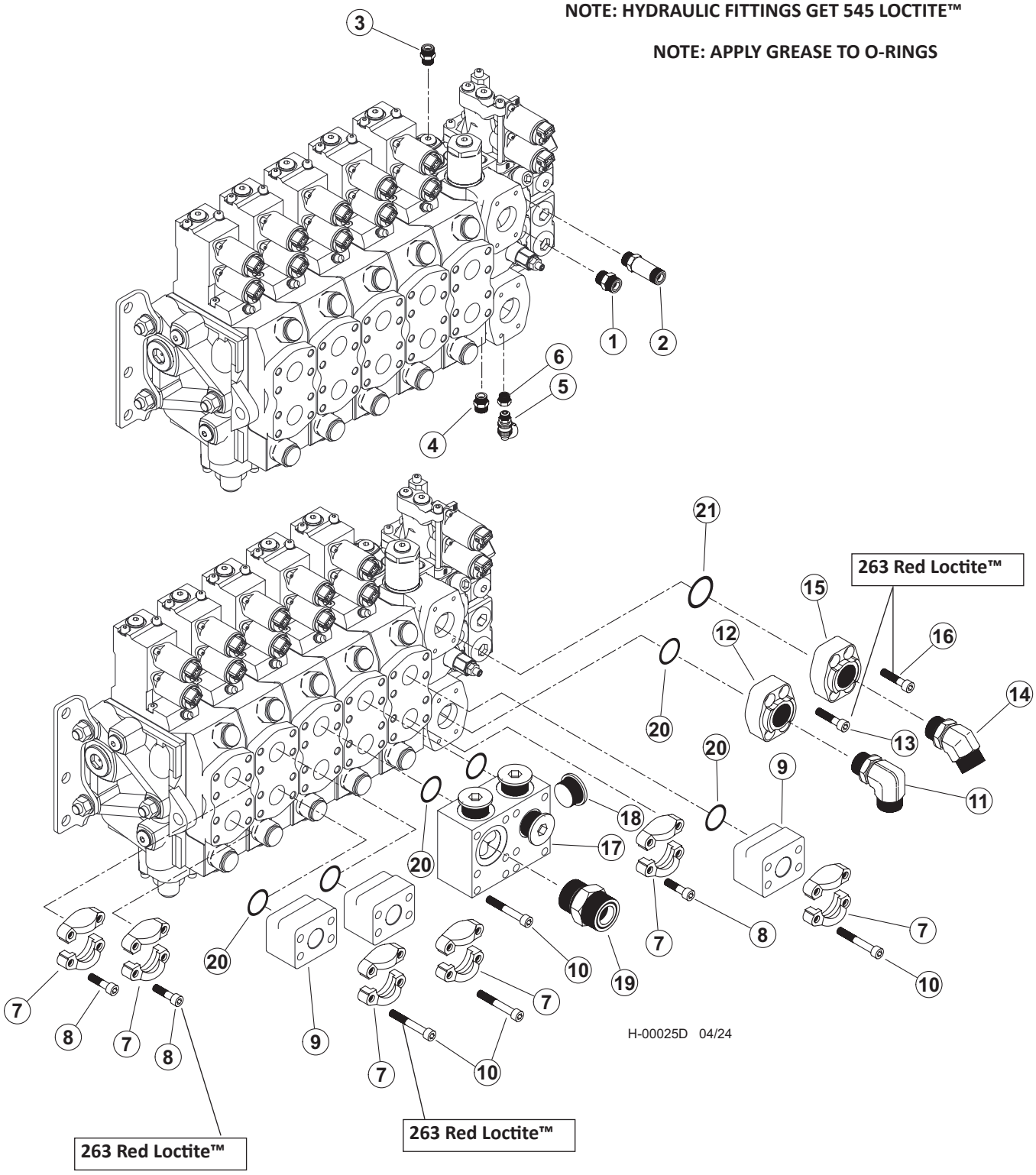

## H100-00240 - MAIN VALVE HYD. FITTINGS - CONTROL FALL PROCESSOR (NON-LEVELING)

| Item | Part # | Description | Qty. |
|---|---|---|---|
| 1 | 50039 | CONNECTOR, STR - 848-TTO-10X10 | 1 |
| 2 | 52554 | CONNECTOR, STR LONG - 10X10 | 1 |
| 3 | 22901 | CONNECTOR, STR - 6-8 F5OLO-S | 1 |
| 4 | 18034 | CONNECTOR, STR - FF1852T-0606S | 1 |
| 5 | 57819 | TAP, GAUGE PORT - #4 SAE ORING BOSS- ST | 1 |
| 6 | 16294 | BUSHING, REDUCER - 6410-6-4 | 1 |
| 7 | 15111 | KIT, SPLIT FLANGE CODE 61 1 INCH | 6 |
| 8 | 20444 | BOLT, ALLEN HEAD - 10MM-1.5P X 35MM **263 RED LOCTITE™** | 12 |
| 9 | 46248 | MANIFOLD, VALVE BLOCK SAE 1” CODE 62 | 3 |
| 10 | 55664 | BOLT, ALLEN HEAD - 10MM-1.5P X 80MM **263 RED LOCTITE™** | 24 |
| 11 | 21143 | ELBOW, 90 - 20-16 C5OLO-S | 1 |
| 12 | 18397 | CONNECTOR, FLANGE PAD - W48-16-16U(C 62) | 1 |
| 13 | 18988 | BOLT, ALLEN HEAD - 12MM-1.75P X 45MM **263 RED LOCTITE™** | 4 |
| 14 | 57477 | FITTING, 20 V5OX-S | 1 |
| 15 | 17909 | CONNECTOR, FLANGE PAD-W46K-20-20 CODE 61 | 1 |
| 16 | 20444 | BOLT, ALLEN HEAD - 10MM-1.5P X 35MM **263 RED LOCTITE™** | 4 |
| 17 | 47890 | MANIFOLD, COMBINED FLOW - DUAL K220 | 1 |
| 18 | 19847 | PLUG - 6408-HHP-16 | 4 |
| 19 | 57492 | FITTING, 20 F5OX-S | 1 |
| 20 | 15377 | O-RING - 1” SF (CODE 61/62) | 8 |
| 21 | 15378 | O-RING - 1.25” SF (CODE 61/62) | 1 |

# H100-00250 - MAIN VALVE COMPONENTS - CONTROL FALL PROCESSOR

MAIN VALVE COMPONENTS - CONTROL FALL PROCESSOR

**NOTE: APPLY GREASE TO O-RINGS**

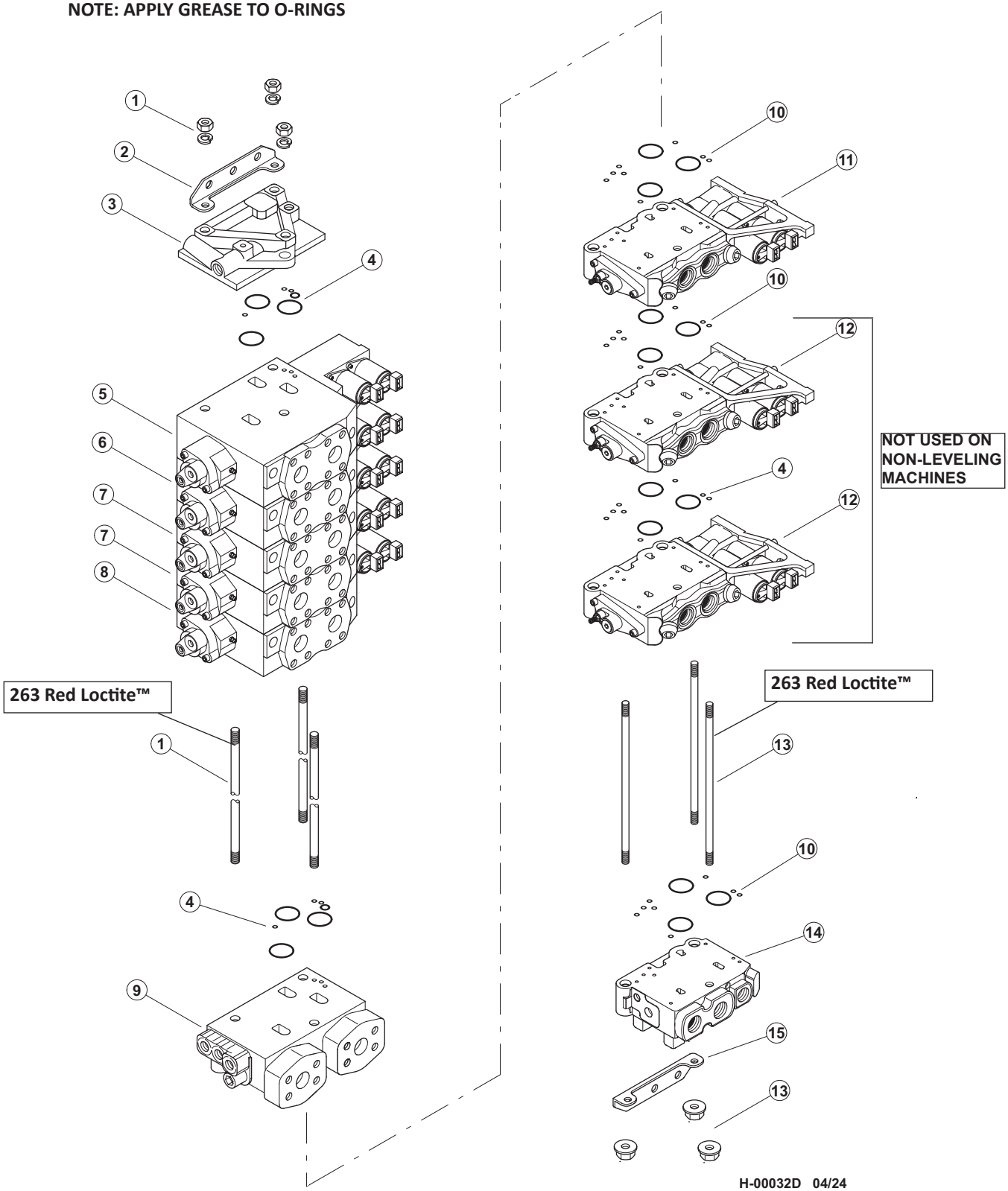


H-00032D 04/24

# H100-00250 - MAIN VALVE COMPONENTS - CONTROL FALL PROCESSOR

## MAIN VALVE COMPONENTS - CONTROL FALL PROCESSOR

| Item | Part # | Description | Qty. |
|---|---|---|---|
| | 57985 | **VALVE, MAIN - IMP (5K220/3L90) - CONTROL FALL PROCESSOR - LEVELING** | |
| | 57990 | **VALVE, MAIN - IMP (5K220/1L90) - CONTROL FALL PROCESSOR - NON-LEVELING** | |
| 1 | 24780 | ROD, TIE - K220 (5-SECTION SPAN) **263 Red Loctite™** | 1 |
| 2 | SEE DESCRIPTION | KIT, BRACKET - K220 **CALL** | 1 |
| 3 | SEE DESCRIPTION | END COVER, K220 VALVE (US) **CALL** | 1 |
| 4 | 24649 | KIT, SEALS - VOAC INTERSECTION | 6 |
| 5 | SEE DESCRIPTION | VALVE SECTION, K220 - STICK BOOM (MR) **CALL** | 1 |
| 6 | SEE DESCRIPTION | VALVE SECTION, K220 - TOOL TILT (MR) **CALL** | 1 |
| 7 | SEE DESCRIPTION | VALVE SECTION, K220 - PROCESSOR (MR) **CALL** | 2 |
| 8 | SEE DESCRIPTION | VALVE SECTION, K220 - MAIN BOOM (MR) **CALL** | 1 |
| 9 | SEE DESCRIPTION | INLET SECTION **CALL** | 11 |
| 10 | 23404 | KIT, SEAL REPAIR - L90LS FACE | 2/4 |
| 11 | SEE DESCRIPTION | VALVE SECTION, L90 - HEAD ROTATE (TCT) **CALL** | 1 |
| 12 | SEE DESCRIPTION | VALVE SECTION, L90 - CAB LEVEL (TCT) **CALL** | 2 |
| 13 | SEE DESCRIPTION | TIE ROD KIT - 3 SECTION - L90 (LEVELING) **263 RED LOCTITE™ CALL** | 1 |
| 13 | SEE DESCRIPTION | TIE ROD KIT - 1 SECTION - L90 (NON-LEVELING) **263 RED LOCTITE™ CALL** | 1 |
| 14 | SEE DESCRIPTION | OUTLET (US) **CALL** | 1 |
| 15 | SEE DESCRIPTION | KIT, BRACKET - L90 **CALL** | 1 |

# H100-00251 - K220 MAIN VALVE SECTION - STICK BOOM - CONTROL FALL PROCESSOR

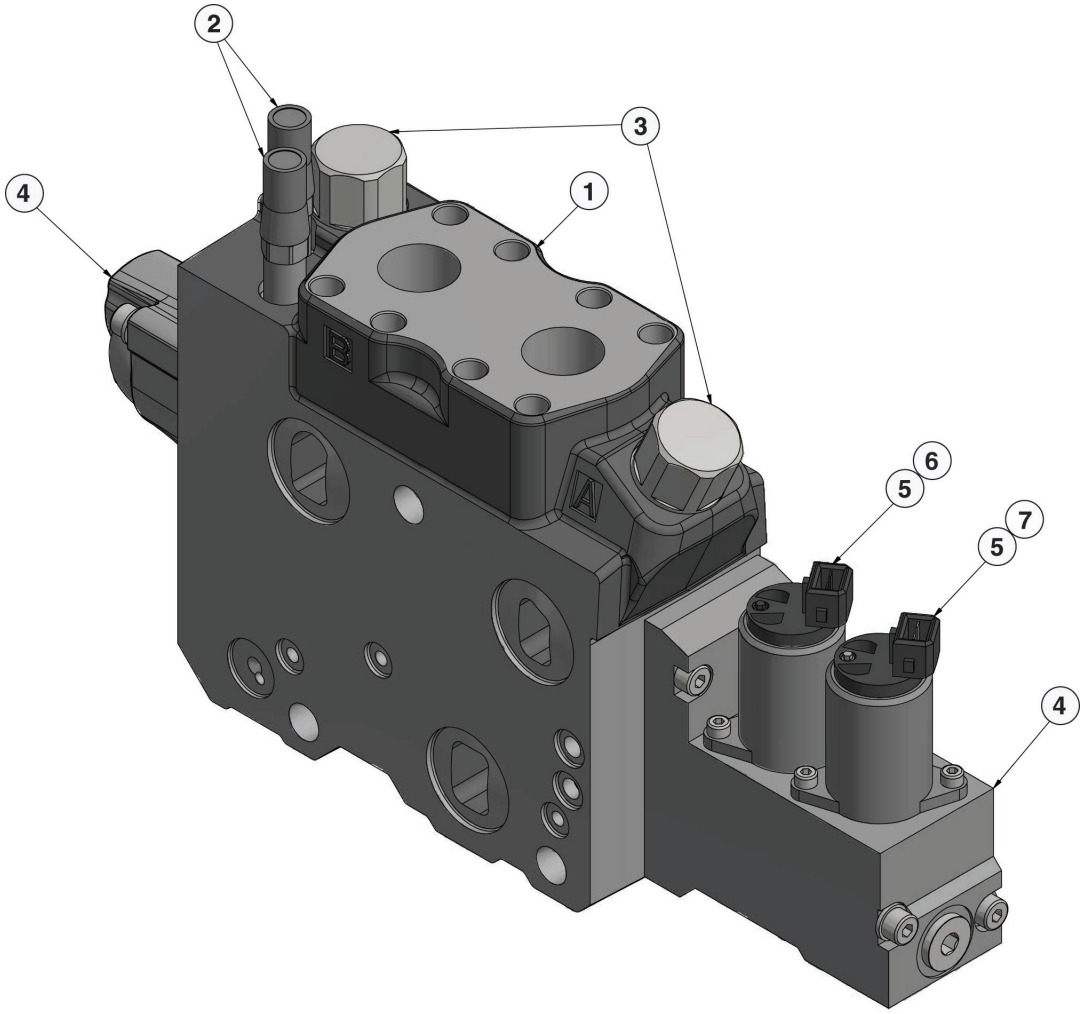


H-00157D 07/24

| Item | Part # | Description | Qty. |
|---|---|---|---|
| 1 | 699210 | VALVE SECTION, STICK - K220 | 1 |
| 2 | 699170 | SUPPLY REDUCER | 2 |
| 3 | 56161 | PORT RELIEF VALVE | 2 |
| 4 | 26424 | CAP KIT | 1 |
| 5 | 20976 | SOLENOID | 2 |
| 6 | 19213043 | PILOT ORIFICE | 1 |
| 7 | 19213046 | PILOT ORIFICE | 1 |
| | 20045380 | SPOOL **(NOT SHOWN)** | 1 |
| | 19217319 | COMPENSATOR **(NOT SHOWN)** | 1 |
| | 24649 | FACE SEAL KIT **(NOT SHOWN)** | 1 |

# H100-00252 - K220 MAIN VALVE SECTION - TOOL TILT - CONTROL FALL PROCESSOR

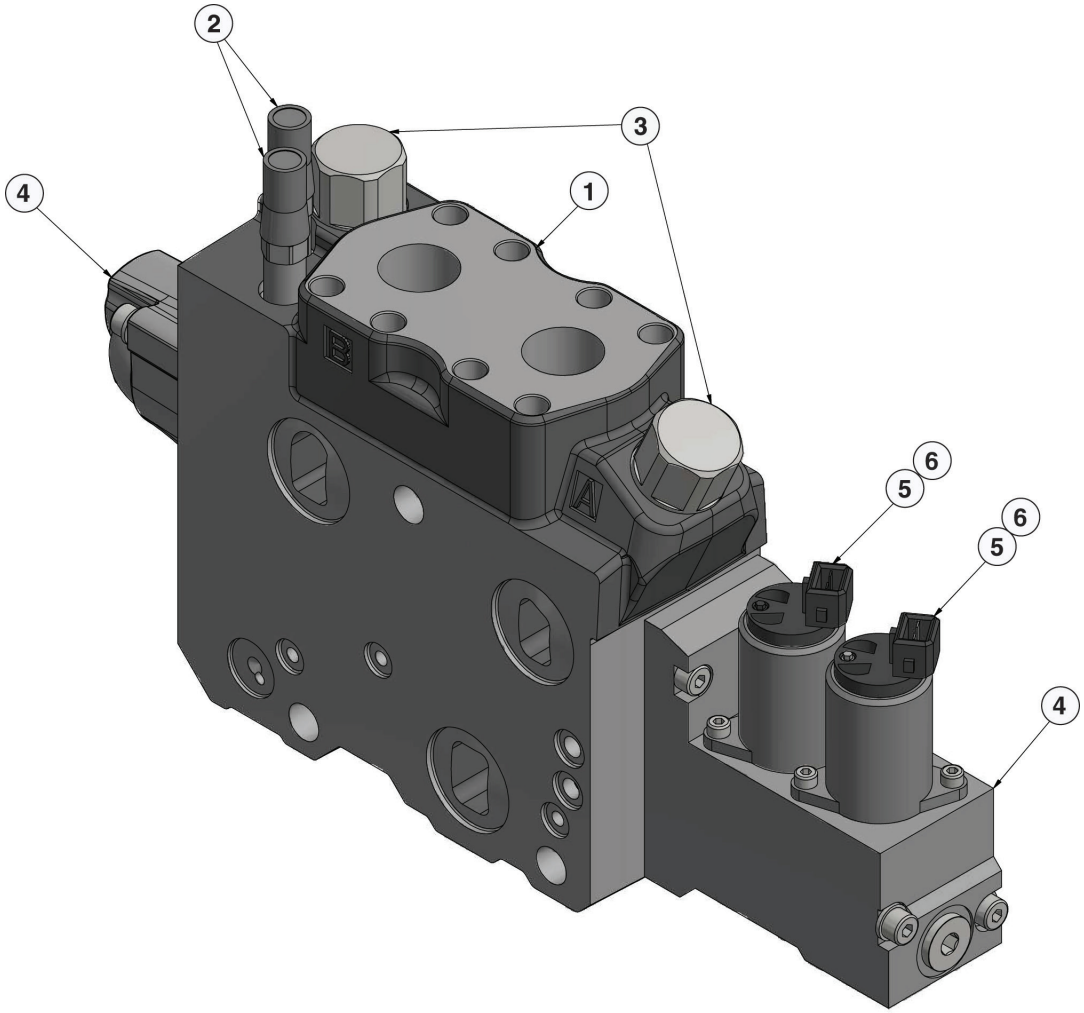


H-00158D 07/24

| Item | Part # | Description | Qty. |
|---|---|---|---|
| 1 | 699210 | VALVE SECTION, TOOL TILT - K220 | 1 |
| 2 | 699170 | SUPPLY REDUCER | 2 |
| 3 | 56161 | PORT RELIEF VALVE | 2 |
| 4 | 26424 | CAP KIT | 1 |
| 5 | 20976 | SOLENOID | 2 |
| 6 | 19213043 | PILOT ORIFICE | 1 |
| | 19217324 | SPOOL **(NOT SHOWN)** | 1 |
| | 19215648 | COMPENSATOR **(NOT SHOWN)** | 1 |
| | 24649 | FACE SEAL KIT | 1 |

## H100-00253 - K220 MAIN VALVE SECTION - PROCESSOR - CONTROL FALL PROCESSOR

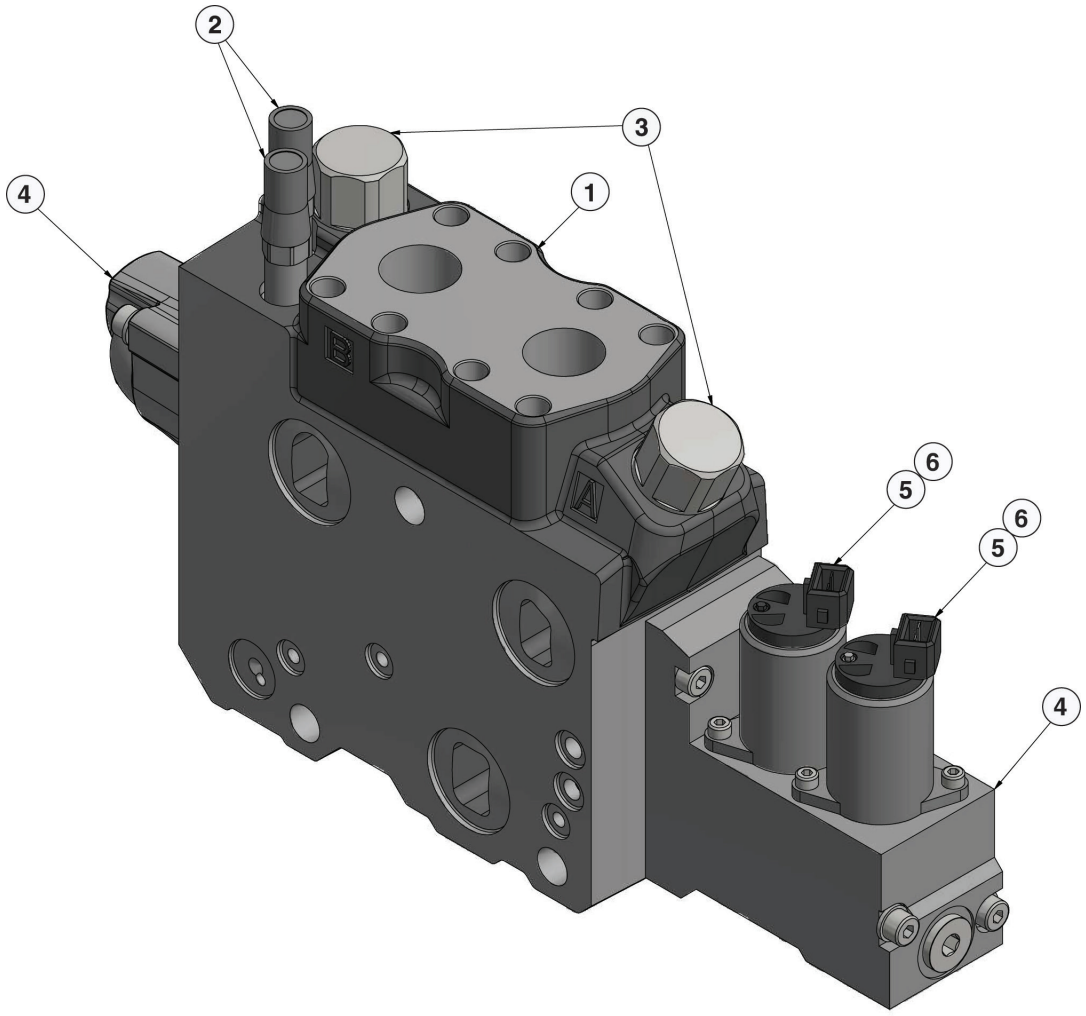


H-00158D 07/24

| Item | Part # | Description | Qty. |
|---|---|---|---|
| 1 | 699210 | VALVE SECTION, PROCESSOR - K220 | 1 |
| 2 | 699170 | SUPPLY REDUCER | 2 |
| 3 | 56472 | PORT RELIEF VALVE | 2 |
| 4 | 26424 | CAP KIT | 1 |
| 5 | 20976 | SOLENOID | 2 |
| 6 | 19213047 | PILOT ORIFICE | 1 |
| | 19217325 | SPOOL **(NOT SHOWN)** | 1 |
| | 19215630 | COMPENSATOR **(NOT SHOWN)** | 1 |
| | 24649 | FACE SEAL KIT | 1 |

# H100-00254 - K220 MAIN VALVE SECTION - MAIN BOOM - CONTROL FALL PROCESSOR

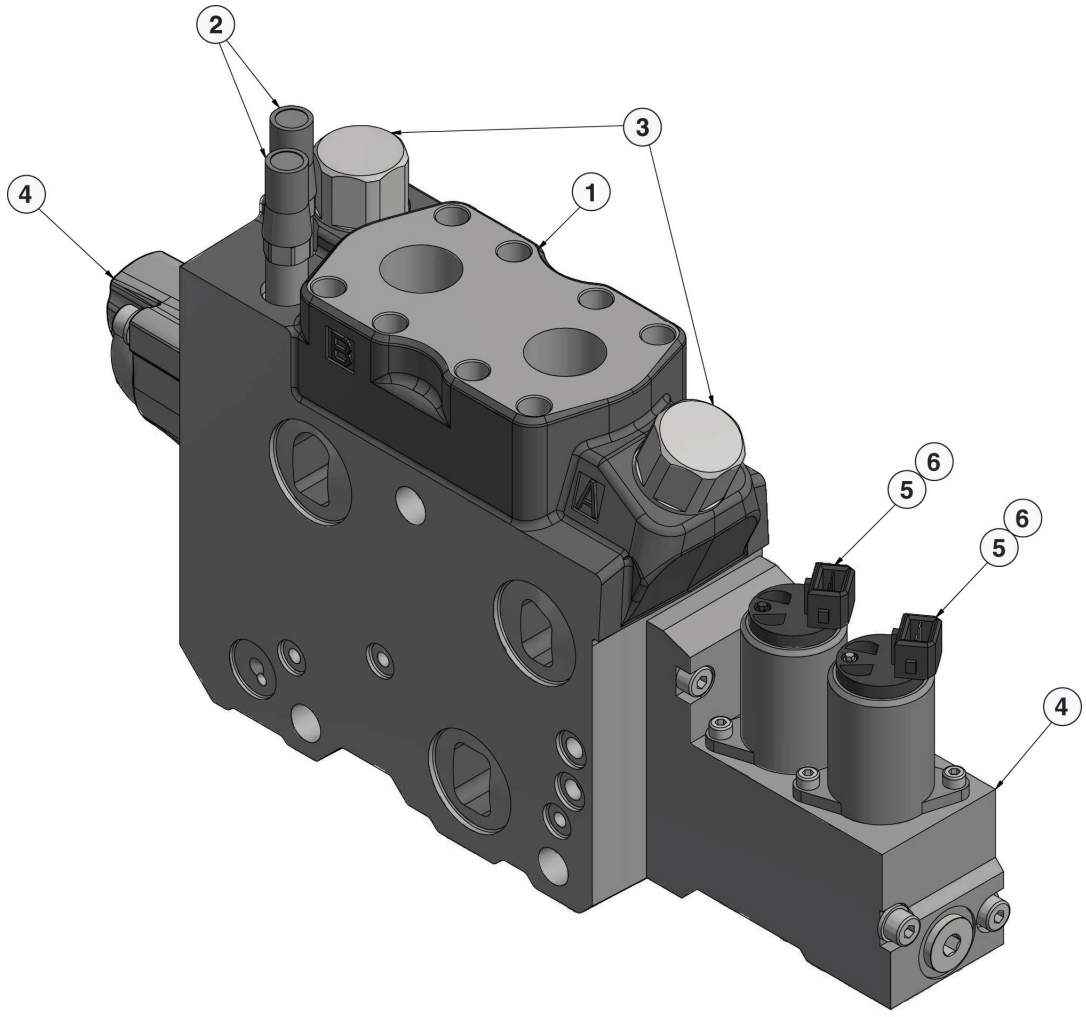


H-00158D 07/24

| Item | Part # | Description | Qty. |
|---|---|---|---|
| 1 | 699210 | VALVE SECTION, MAIN BOOM - K220 | 1 |
| 2 | 699170 | SUPPLY REDUCER | 2 |
| 3 | 56161 | PORT RELIEF VALVE | 2 |
| 4 | 26424 | CAP KIT | 1 |
| 5 | 20976 | SOLENOID | 2 |
| 6 | 19213046 | PILOT ORIFICE | 1 |
| | 19215707 | SPOOL **(NOT SHOWN)** | 1 |
| | 19215649 | COMPENSATOR **(NOT SHOWN)** | 1 |
| | 24649 | FACE SEAL KIT | 1 |

# H100-00255 - K220 MAIN VALVE SECTION - INLET - CONTROL FALL PROCESSOR

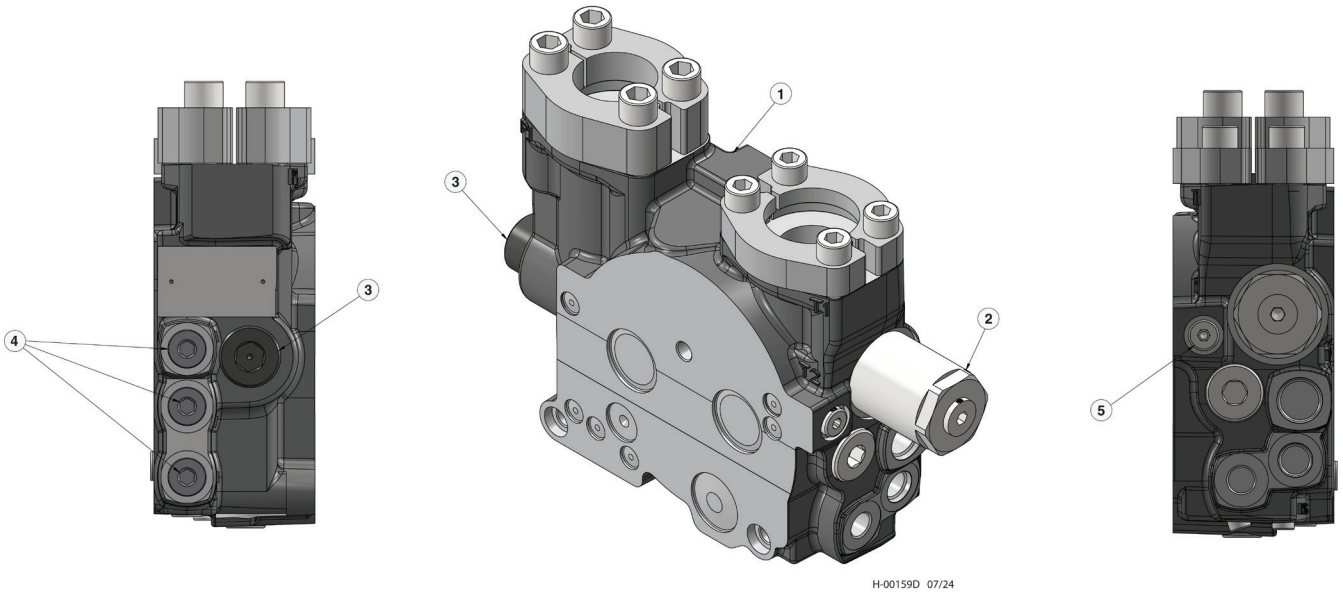


| Item | Part # | Description | Qty. |
|---|---|---|---|
| | 20089048 | INLET SECTION | 1 |
| 1 | 20089023 | COMBO LS INLET | 1 |
| 2 | 19217259 | COUNTER PRESSURE VLV | 1 |
| 3 | 19217256 | RELIEF MAIN | 3 |
| 4 | 19215123 | PLUG | 1 |
| 5 | 19206051 | SCREW | 1 |

# H100-00256 - L90 MAIN VALVE SECTION - MAIN BOOM - HEAD ROTATE (CONTROL FALL PROCESSOR)

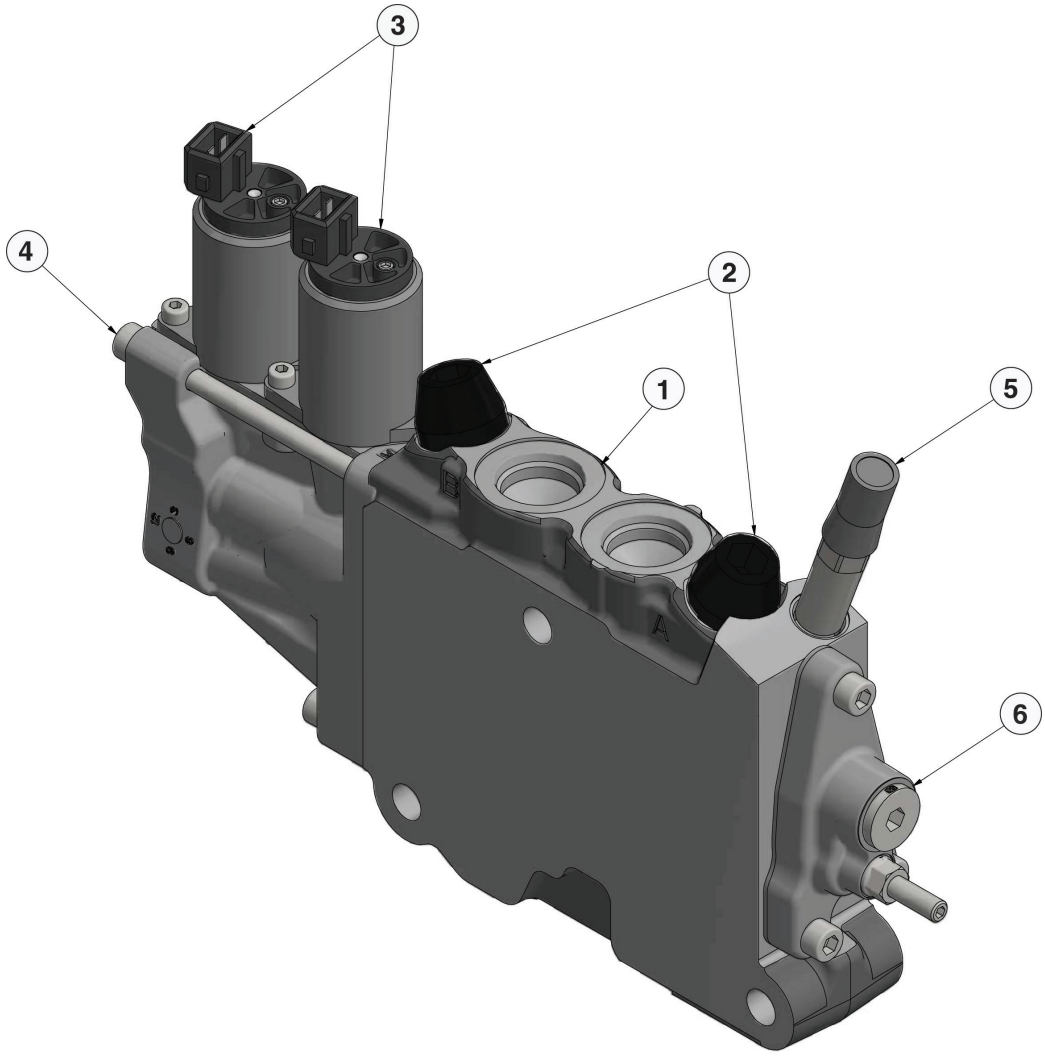


H-00160D 07/24

| Item | Part # | Description | Qty. |
|---|---|---|---|
| 1 | 20047199 | VALVE SECTION, L90 - HEAD ROTATE | 1 |
| 2 | 19213481 | PORT RV | 2 |
| 3 | 20068454 | SOLENOID | 2 |
| 4 | 23416 | B SIDE ACTUATOR CAP | 1 |
| 5 | 699170 | SUPPLY REDUCER | 1 |
| 6 | 23414 | EC2 KIT W/O LEVER SHAFT | 1 |
| | 19213577 | DOUBLE ACTING SPOOL **(NOT SHOWN)** | 1 |
| | 20047208 | COMPENSATOR **(NOT SHOWN)** | 1 |
| | 23404 | FACE SEAL KIT | 1 |

# H100-00257 - L90 MAIN VALVE SECTION - CAB LEVEL - CONTROL FALL PROCESSOR

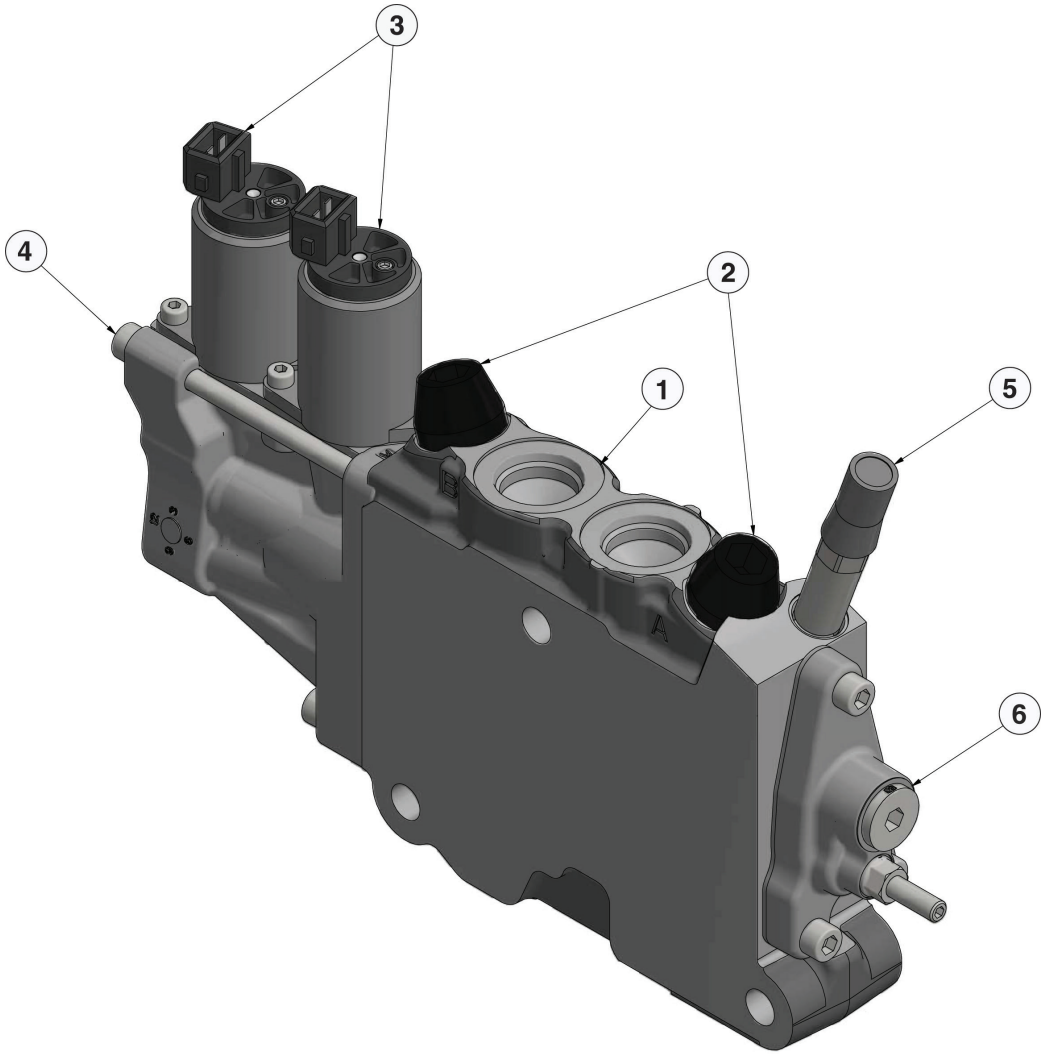


H-00160D 07/24

| Item | Part # | Description | Qty. |
|---|---|---|---|
| 1 | 20047199 | VALVE SECTION, L90 - LEVEL | 1 |
| 2 | 19213483 | PORT RV | 2 |
| 3 | 20068454 | SOLENOID | 2 |
| 4 | 23416 | B SIDE ACTUATOR CAP | 1 |
| 5 | 19213635 | SUPPLY REDUCER | 1 |
| 6 | 23414 | EC2 KIT W/O LEVER SHAFT | 1 |
| | 19213584 | SPOOL **(NOT SHOWN)** | 1 |
| | 20047207 | COMPENSATOR **(NOT SHOWN)** | 1 |
| | 23404 | FACE SEAL KIT **(NOT SHOWN)** | 1 |

# H100-00258 - L90 VALVE SECTION - MAIN BOOM - OUTLET - CONTROL FALL PROCESSOR

**NOTE: APPLY GREASE TO O-RINGS**

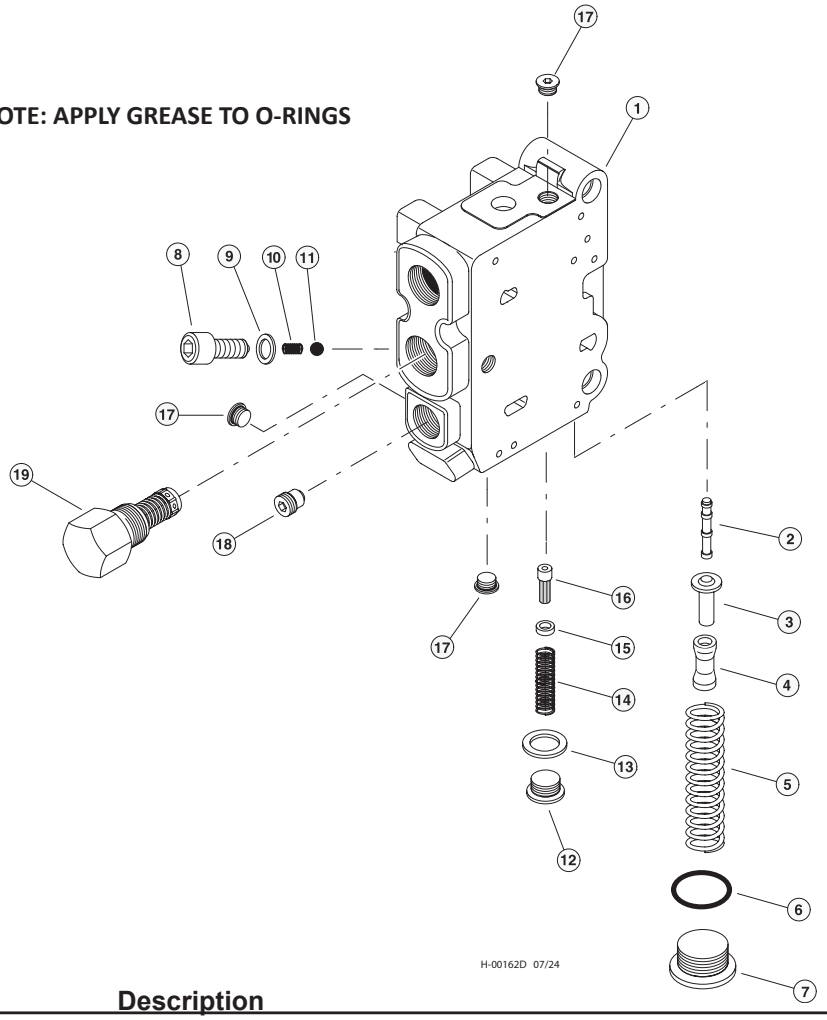


| Item | Part # | Description | Qty. |
|---|---|---|---|
| | 23412 | VALVE SECTION, OUTLET | 1 |
| 1 | **SEE DESCRIPTION** | BODY, VALVE SECTION **CALL** | 1 |
| | 23431 | KIT, PILOT SUPPLY REDUCER (GREEN)(35 BAR)(SEE NOTE #1) | 1 |
| | 23432 | KIT, PILOT SUPPLY REDUCER (RED)(35 BAR)(SEE NOTE #1) | 1 |
| 2 | **SEE DESCRIPTION** | SPOOL, PILOT REDUCER **CALL** | 1 |
| 3 | **SEE DESCRIPTION** | RETAINER, SPRING **CALL** | 1 |
| 4 | **SEE DESCRIPTION** | SPACER, SPRING **CALL** | 1 |
| 5 | **SEE DESCRIPTION** | SPRING **CALL** | 1 |
| 6 | 0663909901 | O-RING | 1 |
| 7 | 9126244413 | PLUG | 1 |
| 8 | 9127320022 | PLUG | 1 |
| 9 | **06611005** | RING, SEAL | 1 |
| 10 | 23433 | SPRING | 1 |
| 11 | **SEE DESCRIPTION** | BALL, CHECK **CALL** | 1 |
| | **SEE DESCRIPTION** | KIT, PILOT SUPPLY STRAINER **CALL** | 1 |
| 12 | **9127320020** | PLUG **CALL** | 1 |
| 13 | 15412 | RING, SEAL | 1 |
| 14 | **SEE DESCRIPTION** | SPRING | 1 |
| 15 | **SEE DESCRIPTION** | SPACER | 1 |
| 16 | 9126386076 | STRAINER | 1 |
| 17 | 15412 | PLUG - 6408-FHP-6 | 3 |
| 18 | 393000K078 | PLUG, PILOT DRAIN | 1 |
| 19 | 393000K068 | COUNTER PRESS. VALVE - 130 PSI | 1 |

# H100-00260 - MAIN VALVE HYD. FITTINGS - DANGLE PROCESSOR, FIXED ARM (LEVELING)

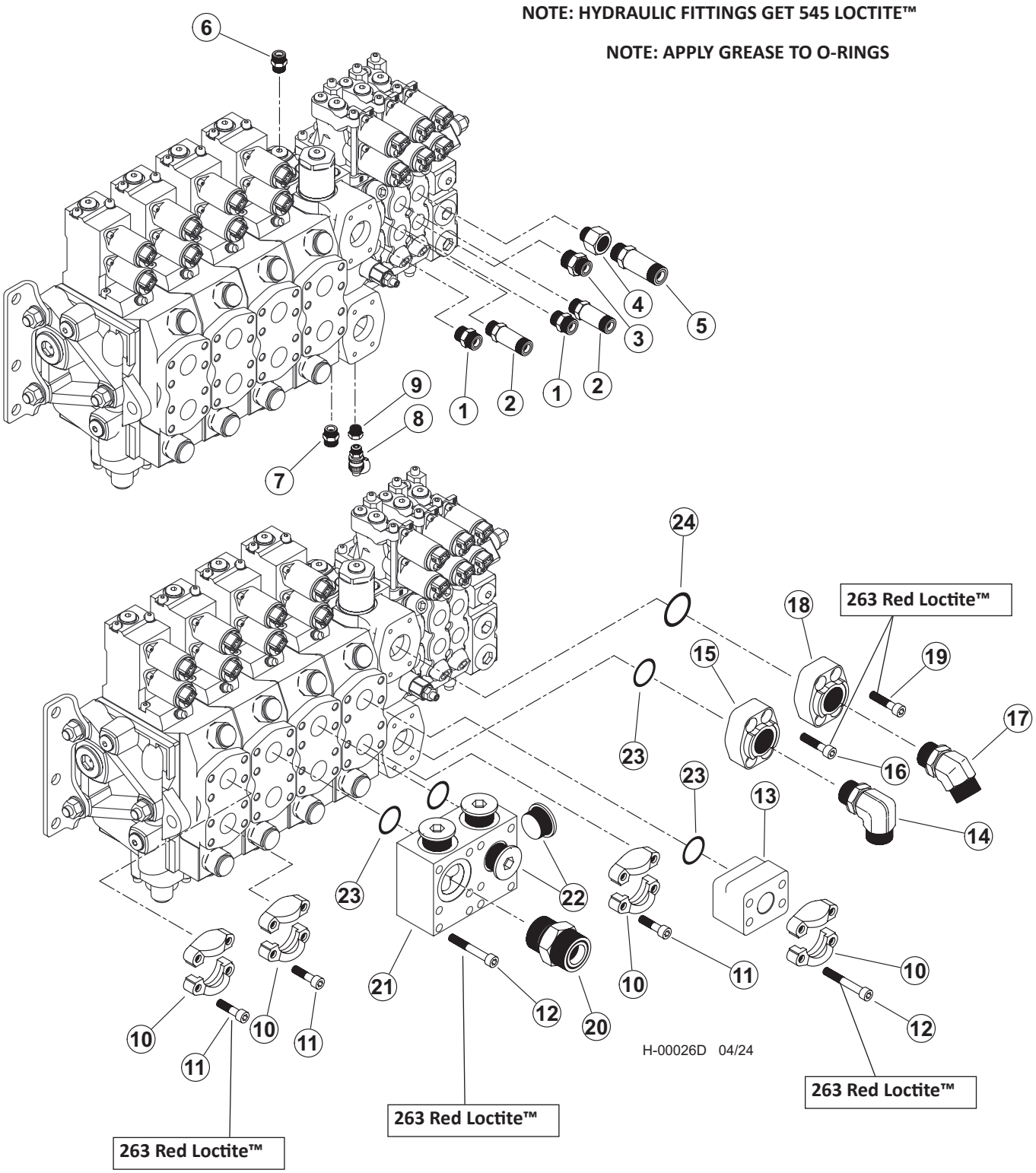

# H100-00260 - MAIN VALVE HYD. FITTINGS - DANGLE PROCESSOR, FIXED ARM (LEVELING)

| Item | Part # | Description | Qty. |
|---|---|---|---|
| | **57940** | **VALVE, MAIN 4K220/3L90 - DANGLE PROCESSOR, FIXED ARM - LEVELING** | |
| 1 | 50039 | CONNECTOR, STR - 848-TTO-10X10 | 1 |
| 2 | 52554 | CONNECTOR, STR LONG - 10X10 | 1 |
| 3 | 19290 | BUSHING, REDUCER - 6410-10-8 | 4 |
| 4 | 15117 | CONNECTOR, STR - FF1852T-0808S | 2 |
| 5 | 19091 | CONNECTOR, STR LONG - 848L-TTO-08X08 | 2 |
| 6 | 22901 | CONNECTOR, STR - 6-8 F5OLO-S | 1 |
| 7 | 18034 | CONNECTOR, STR - FF1852T-0606S | 1 |
| 8 | 57819 | TAP, GAUGE PORT - #4 SAE ORING BOSS- ST | 1 |
| 9 | 16294 | BUSHING, REDUCER - 6410-6-4 | 1 |
| 10 | 15111 | KIT, SPLIT FLANGE CODE 61 1 INCH | 4 |
| 11 | 20444 | BOLT, ALLEN HEAD - 10MM-1.5P X 35MM **263 RED LOCTITE™** | 12 |
| 12 | 55664 | BOLT, ALLEN HEAD - 10MM-1.5P X 80MM **263 RED LOCTITE™** | 24 |
| 13 | 46248 | MANIFOLD, VALVE BLOCK SAE 1” CODE 62 | 3 |
| 14 | 21143 | ELBOW, 90 - 20-16 C5OLO-S | 1 |
| 15 | 18397 | CONNECTOR, FLANGE PAD - W48-16-16U(C 62) | 1 |
| 16 | 18988 | BOLT, ALLEN HEAD - 12MM-1.75P X 45MM **263 RED LOCTITE™** | 4 |
| 17 | 57477 | FITTING, 20 V5OX-S | 1 |
| 18 | 17909 | CONNECTOR, FLANGE PAD-W46K-20-20 CODE 61 | 1 |
| 19 | 20444 | BOLT, ALLEN HEAD - 10MM-1.5P X 35MM **263 RED LOCTITE™** | 4 |
| 20 | 57492 | FITTING, 20 F5OX-S | 1 |
| 21 | 47890 | MANIFOLD, COMBINED FLOW - DUAL K220 | 1 |
| 22 | 19847 | PLUG - 6408-HHP-16 | 4 |
| 23 | 15377 | O-RING - 1” SF (CODE 61/62) | 8 |
| 24 | 15378 | O-RING - 1.25” SF (CODE 61/62) | 1 |

# H100-00270 - MAIN VALVE HYD. FITTINGS - DANGLE PROCESSOR, FIXED ARM (NON-LEVELING)

**NOTE: HYDRAULIC FITTINGS GET 545 LOCTITE™**

**NOTE: APPLY GREASE TO O-RINGS**

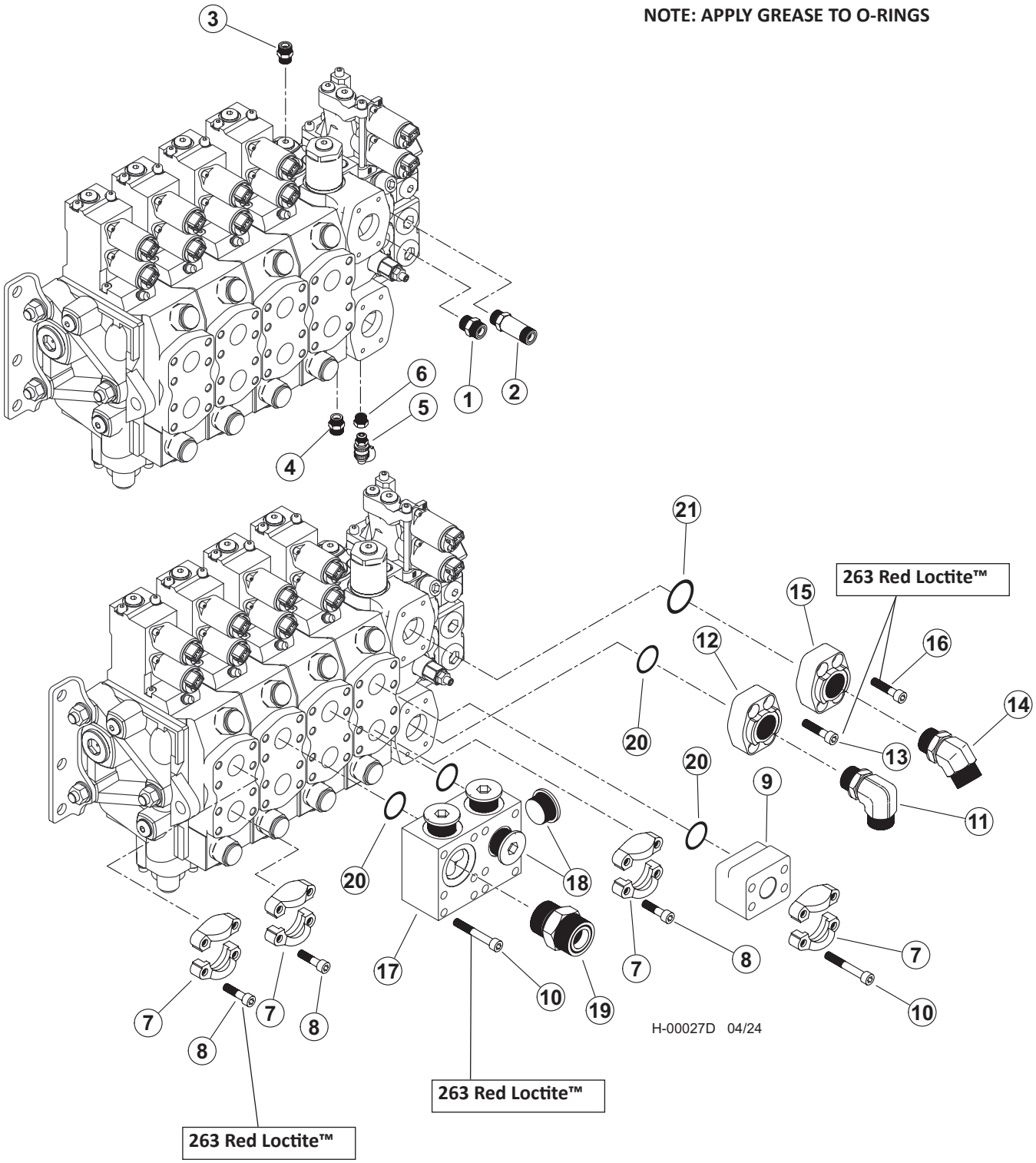

# H100-00270 - MAIN VALVE HYD. FITTINGS - DANGLE PROCESSOR, FIXED ARM (NON-LEVELING)

| Item | Part # | Description | Qty. |
|---|---|---|---|
| | **58131** | **VALVE, MAIN - IMP (4K220/1L90) - DANGLE PROCESSOR, FIXED ARM - NON-LEVELING** | |
| 1 | 50039 | CONNECTOR, STR - 848-TTO-10X10 | 1 |
| 2 | 52554 | CONNECTOR, STR LONG - 10X10 | 1 |
| 3 | 22901 | CONNECTOR, STR - 6-8 F5OLO-S | 1 |
| 4 | 18034 | CONNECTOR, STR - FF1852T-0606S | 1 |
| 5 | 57819 | TAP, GAUGE PORT - #4 SAE ORING BOSS- ST | 1 |
| 6 | 16294 | BUSHING, REDUCER - 6410-6-4 | 1 |
| 7 | 15111 | KIT, SPLIT FLANGE CODE 61 1 INCH | 4 |
| 8 | 20444 | BOLT, ALLEN HEAD - 10MM-1.5P X 35MM **263 RED LOCTITE™** | 8 |
| 9 | 46248 | MANIFOLD, VALVE BLOCK SAE 1” CODE 62 | 1 |
| 10 | 55664 | BOLT, ALLEN HEAD - 10MM-1.5P X 80MM **263 RED LOCTITE™** | 16 |
| 11 | 21143 | ELBOW, 90 - 20-16 C5OLO-S | 1 |
| 12 | 18397 | CONNECTOR, FLANGE PAD - W48-16-16U(C 62) | 1 |
| 13 | 18988 | BOLT, ALLEN HEAD - 12MM-1.75P X 45MM **263 RED LOCTITE™** | 4 |
| 14 | 57477 | FITTING, 20 V5OX-S | 1 |
| 15 | 17909 | CONNECTOR, FLANGE PAD-W46K-20-20 CODE 61 | 1 |
| 16 | 20444 | BOLT, ALLEN HEAD - 10MM-1.5P X 35MM **263 RED LOCTITE™** | 4 |
| 17 | 47890 | MANIFOLD, COMBINED FLOW - DUAL K220 | 1 |
| 18 | 19847 | PLUG - 6408-HHP-16 | 4 |
| 19 | 57492 | FITTING, 20 F5OX-S | 1 |
| 20 | 15377 | O-RING - 1” SF (CODE 61/62) | 8 |
| 21 | 15378 | O-RING - 1.25” SF (CODE 61/62) | 1 |

# H100-00280 - MAIN VALVE COMPONENTS - DANGLE PROCESSOR WITH FIXED ARM

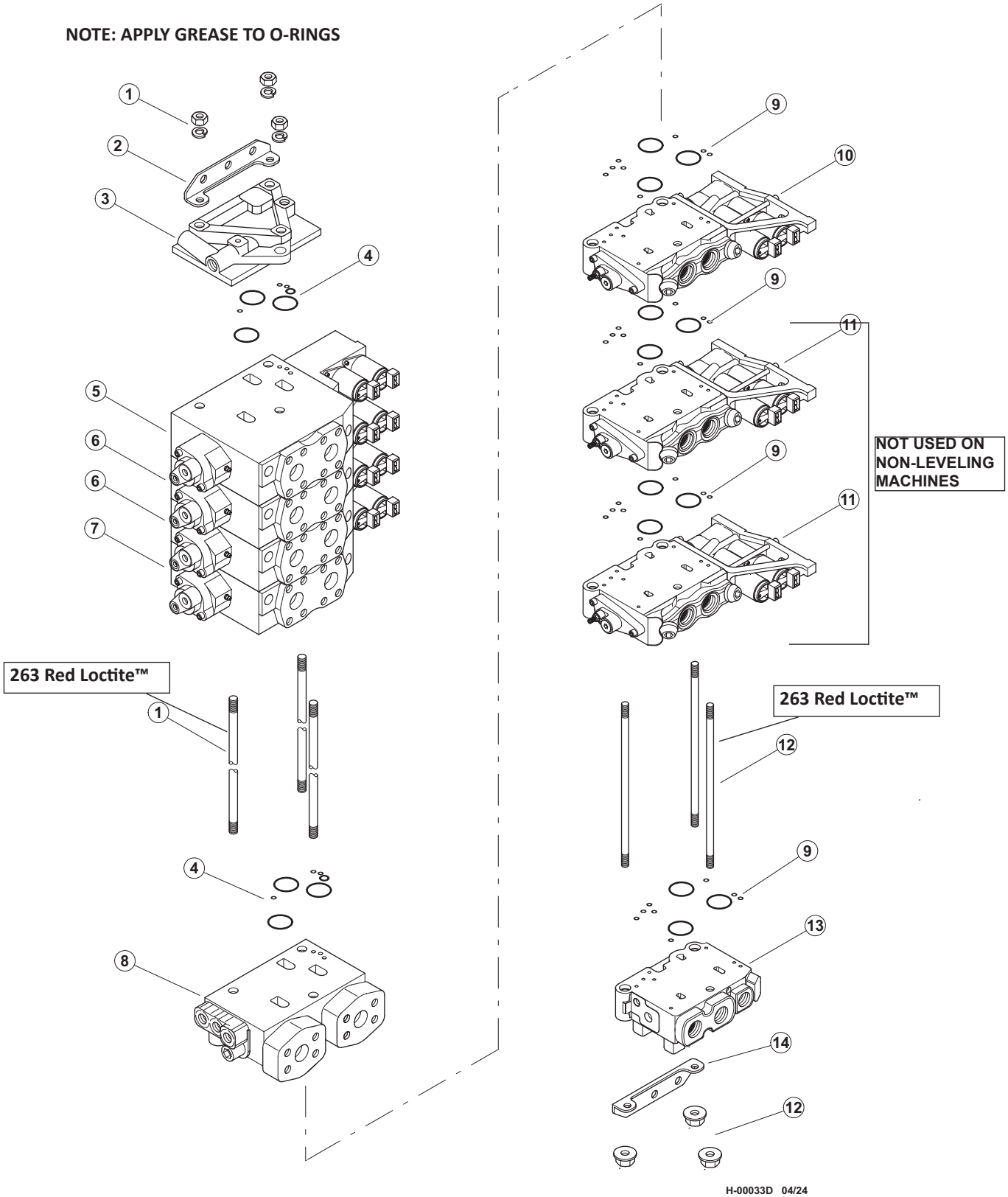

# H100-00280 - MAIN VALVE COMPONENTS - DANGLE PROCESSOR WITH FIXED ARM

| Item | Part # | Description | Qty. |
|---|---|---|---|
| | **57940** | **VALVE, MAIN 4K220/3L90 - DANGLE PROCESSOR, FIXED ARM - LEVELING** | |
| | **58131** | **VALVE, MAIN - IMP (4K220/1L90) - DANGLE PROCESSOR, FIXED ARM - NON-LEVELING** | |
| 1 | **SEE DESCRIPTION** | ROD, TIE - K220 (4-SECTION SPAN) **263 Red Loctite™ CALL** | 1 |
| 2 | **SEE DESCRIPTION** | KIT, BRACKET - K220 **CALL** | 1 |
| 3 | **SEE DESCRIPTION** | END COVER, K220 VALVE (US) **CALL** | 1 |
| 4 | 24649 | KIT, SEALS - VOAC INTERSECTION | 5 |
| 5 | **SEE DESCRIPTION** | VALVE SECTION, K220 - STICK BOOM (MR) **CALL** | 1 |
| 6 | **SEE DESCRIPTION** | VALVE SECTION, K220 - PROCESSOR (MR) **CALL** | 2 |
| 7 | **SEE DESCRIPTION** | VALVE SECTION, K220 - MAIN BOOM (MR) **CALL** | 1 |
| 8 | **SEE DESCRIPTION** | INLET SECTION **CALL** | 1 |
| 9 | 23404 | KIT, SEAL REPAIR - L90LS FACE | 2/4 |
| 10 | LM273 | VALVE SECTION, L90 - HEAD ROTATE (TCT) | 1 |
| 11 | **SEE DESCRIPTION** | VALVE SECTION, L90 - CAB LEVEL (TCT) **CALL** | 2 |
| 12 | **SEE DESCRIPTION** | TIE ROD KIT - 3 SECTION - L90 (LEVELING) **263 RED LOCTITE™ CALL** | 1 |
| 12 | **SEE DESCRIPTION** | TIE ROD KIT - 1 SECTION - L90 (NON-LEVELING) **263 RED LOCTITE™ CALL** | 1 |
| 13 | **SEE DESCRIPTION** | OUTLET (US) **CALL** | 1 |
| 14 | **SEE DESCRIPTION** | KIT, BRACKET - L90 **CALL** | 1 |

# H100-00281 - K220 MAIN VALVE SECTION - STICK BOOM
# DANGLE PROCESSOR WITH FIXED ARM

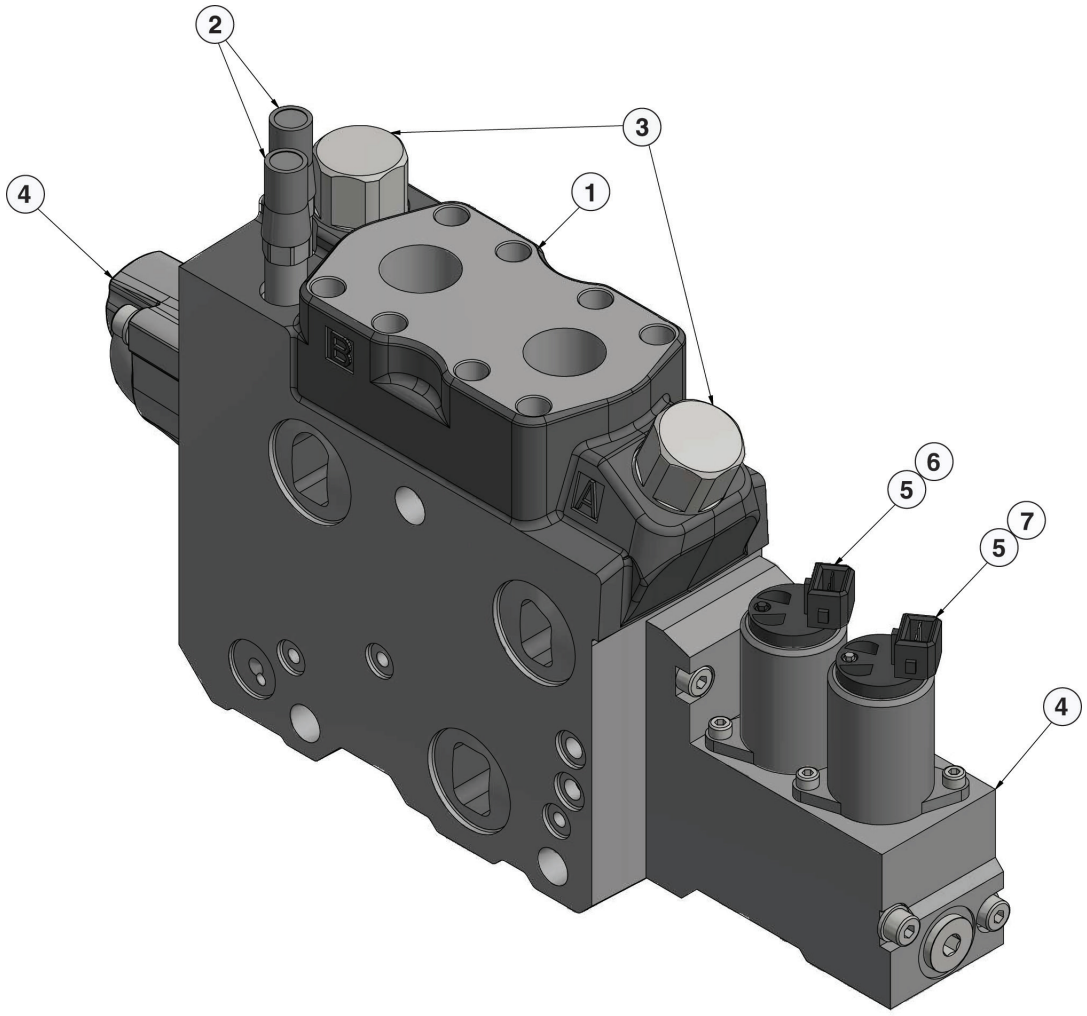


H-00157D 07/24

| Item | Part # | Description | Qty. |
|---|---|---|---|
| 1 | 699210 | VALVE SECTION, STICK - K220 | 1 |
| 2 | 699170 | SUPPLY REDUCER | 2 |
| 3 | 56161 | PORT RELIEF VALVE | 2 |
| 4 | 26424 | CAP KIT | 1 |
| 5 | 20976 | SOLENOID | 2 |
| 6 | 19213043 | PILOT ORIFICE | 1 |
| 7 | 19213046 | PILOT ORIFICE | 1 |
| | 20045380 | SPOOL **(NOT SHOWN)** | 1 |
| | 19217319 | COMPENSATOR **(NOT SHOWN)** | 1 |
| | 24649 | FACE SEAL KIT **(NOT SHOWN)** | 1 |

# H100-00282 - K220 MAIN VALVE SECTION DANGLE PROCESSOR WITH FIXED ARM

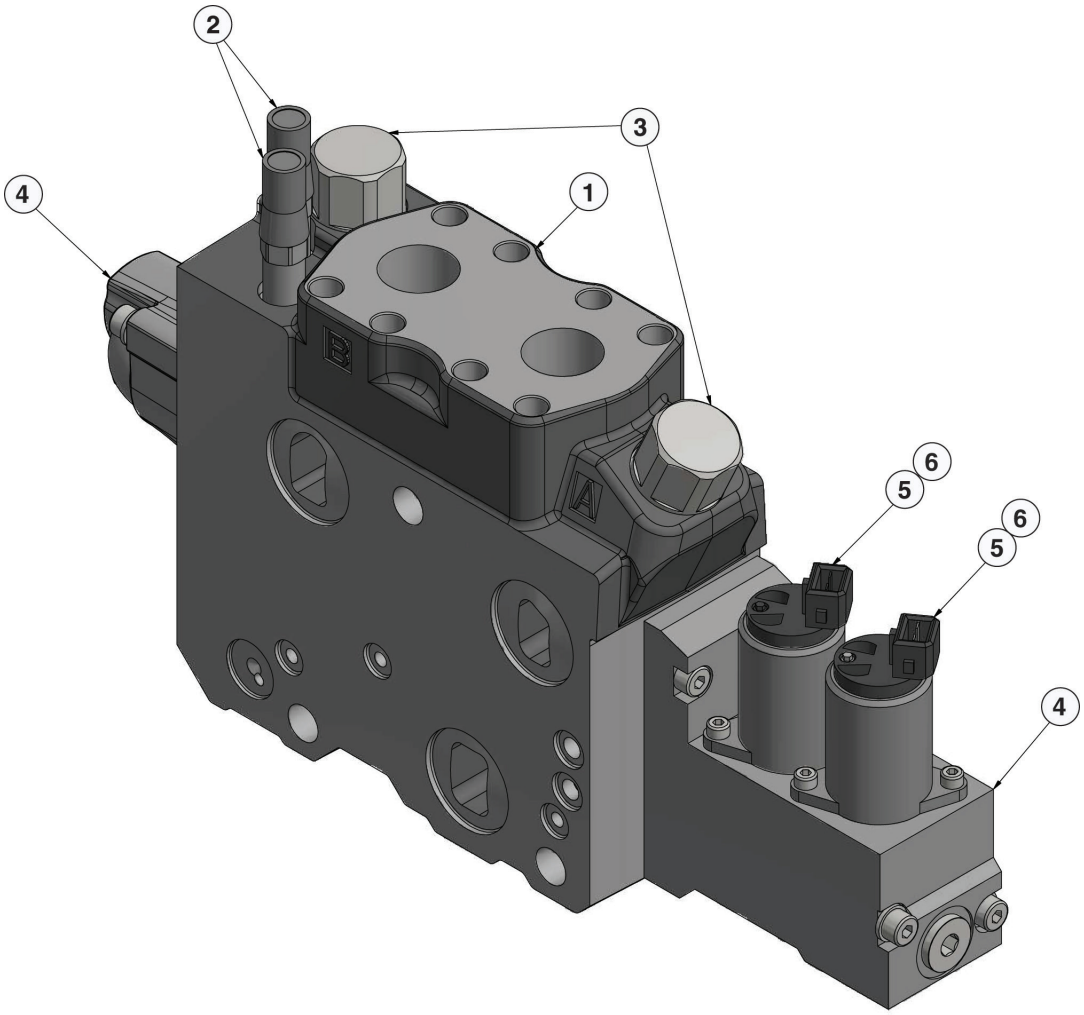


H-00158D 07/24

| Item | Part # | Description | Qty. |
|---|---|---|---|
| 1 | 699210 | VALVE SECTION, PROCESSOR - K220 | 1 |
| 2 | 699170 | SUPPLY REDUCER | 2 |
| 3 | 56472 | PORT RELIEF VALVE | 2 |
| 4 | 26424 | CAP KIT | 1 |
| 5 | 20976 | SOLENOID | 2 |
| 6 | 19213047 | PILOT ORIFICE | 1 |
| | 19217325 | SPOOL **(NOT SHOWN)** | 1 |
| | 19215630 | COMPENSATOR **(NOT SHOWN)** | 1 |
| | 24649 | FACE SEAL KIT | 1 |

# H100-00283 - K220 MAIN VALVE SECTION - MAIN BOOM DANGLE PROCESSOR WITH FIXED ARM

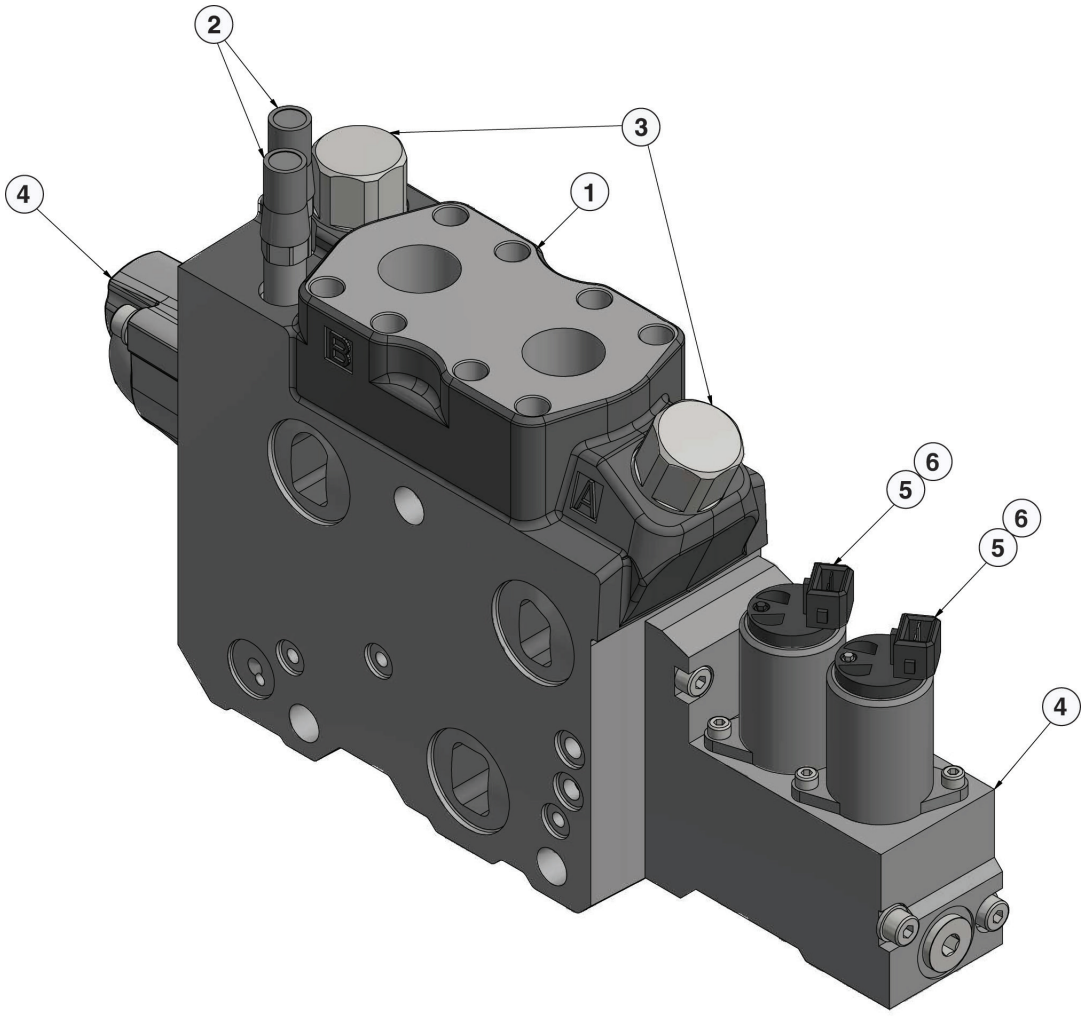


H-00158D 07/24

| Item | Part # | Description | Qty. |
|---|---|---|---|
| 1 | 699210 | VALVE SECTION, PROCESSOR - K220 | 1 |
| 2 | 699170 | SUPPLY REDUCER | 2 |
| 3 | 56161 | PORT RELIEF VALVE | 2 |
| 4 | 26424 | CAP KIT | 1 |
| 5 | 20976 | SOLENOID | 2 |
| 6 | 19213046 | PILOT ORIFICE | 1 |
| | 19215707 | SPOOL **(NOT SHOWN)** | 1 |
| | 19215649 | COMPENSATOR **(NOT SHOWN)** | 1 |
| | 24649 | FACE SEAL KIT | 1 |

# H100-00284 - K220 MAIN VALVE SECTION - INLET
# (DANGLE PROCESSOR WITH FIXED ARM)

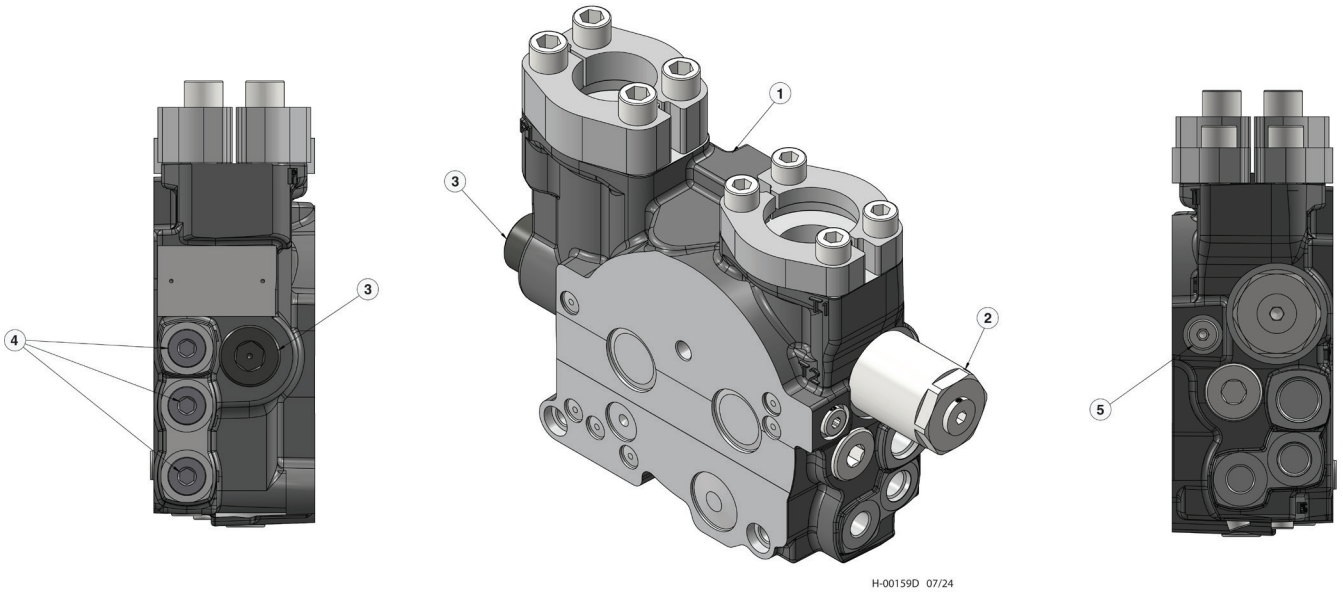


| Item | Part # | Description | Qty. |
|---|---|---|---|
| | 20089048 | INLET SECTION | 1 |
| 1 | 20089023 | COMBO LS INLET | 1 |
| 2 | 19217259 | COUNTER PRESSURE VLV | 1 |
| 3 | 19217256 | RELIEF MAIN | 3 |
| 4 | 19215123 | PLUG | 1 |
| 5 | 19206051 | SCREW | 1 |

# H100-00285 - L90 MAIN VALVE SECTION - MAIN BOOM - HEAD ROTATE (DANGLE PROCESSOR WITH FIXED ARM)

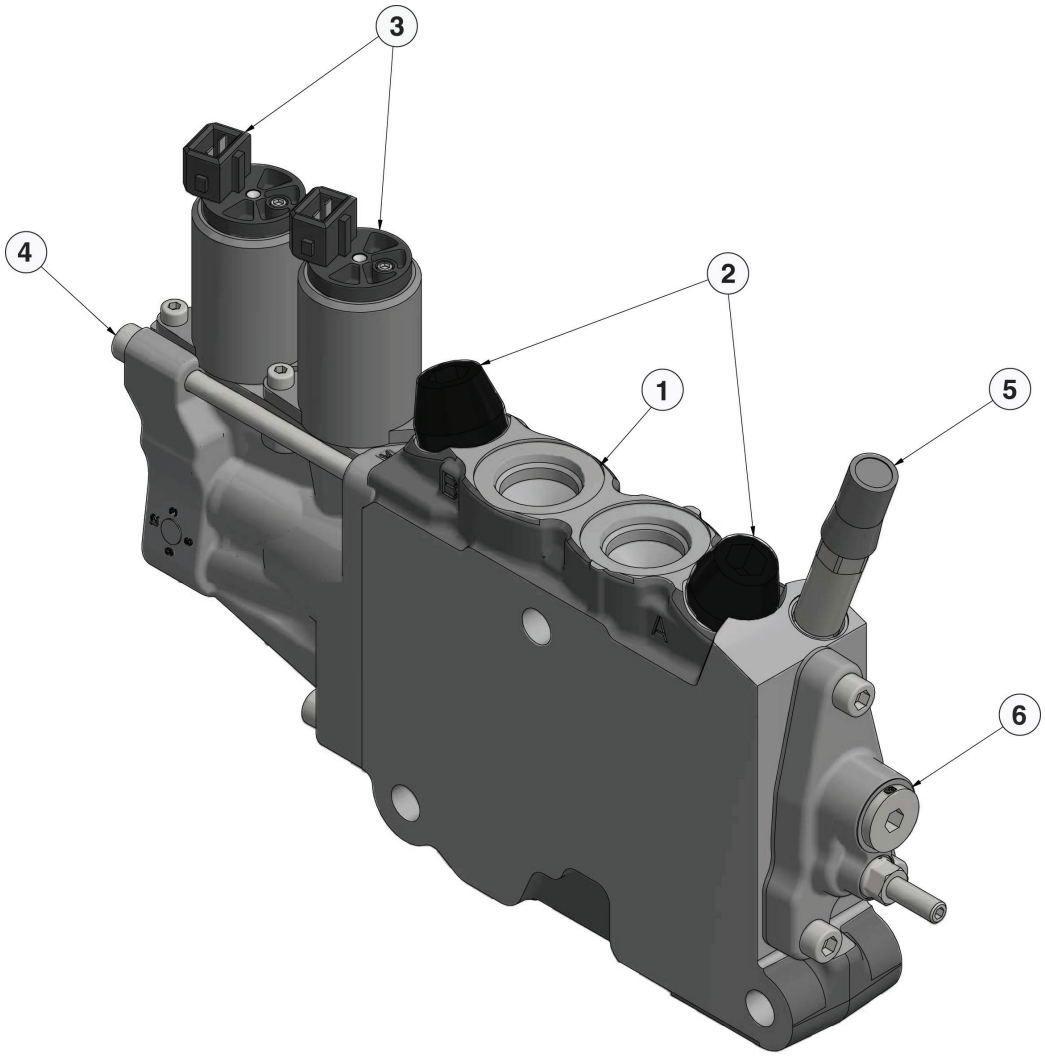


H-00160D 07/24

| Item | Part # | Description | Qty. |
|---|---|---|---|
| 1 | 20047199 | VALVE SECTION, L90 - HEAD ROTATE | 1 |
| 2 | 19213479 | PORT RV | 2 |
| 3 | 20068454 | SOLENOID | 2 |
| 4 | 23416 | B SIDE ACTUATOR CAP | 1 |
| 5 | 699170 | SUPPLY REDUCER | 1 |
| 6 | 23414 | EC2 KIT W/O LEVER SHAFT | 1 |
| | 19213554 | DOUBLE ACTING SPOOL **(NOT SHOWN)** | 1 |
| | 20047205 | COMPENSATOR **(NOT SHOWN)** | 1 |
| | 23404 | FACE SEAL KIT | 1 |

# H100-00286 - L90 MAIN VALVE SECTION - CAB LEVEL
# (DANGLE PROCESSOR WITH FIXED ARM)

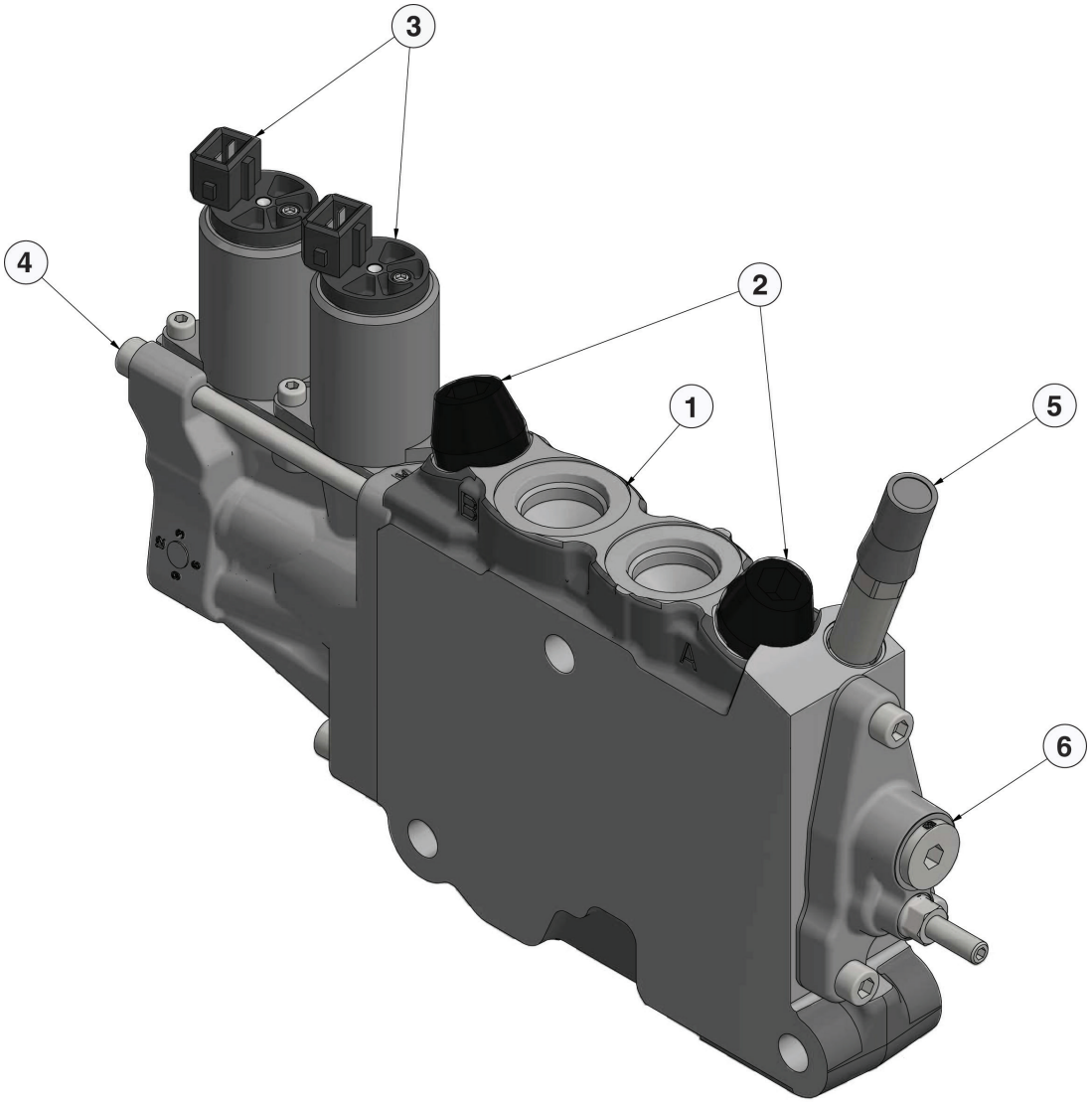


H-00160D 07/24

| Item | Part # | Description | Qty. |
|---|---|---|---|
| 1 | 20047199 | VALVE SECTION, L90 - LEVEL | 1 |
| 2 | 19213483 | PORT RV | 2 |
| 3 | 20068454 | SOLENOID | 2 |
| 4 | 23416 | B SIDE ACTUATOR CAP | 1 |
| 5 | 699170 | SUPPLY REDUCER | 1 |
| 6 | 23414 | EC2 KIT W/O LEVER SHAFT | 1 |
| | 19213584 | SPOOL **(NOT SHOWN)** | 1 |
| | 20047207 | COMPENSATOR **(NOT SHOWN)** | 1 |
| | 23404 | FACE SEAL KIT **(NOT SHOWN)** | 1 |

# H100-00287 - L90 VALVE SECTION - MAIN BOOM - OUTLET (DANGLE PROCESSOR WITH FIXED ARM)

**NOTE: APPLY GREASE TO O-RINGS**

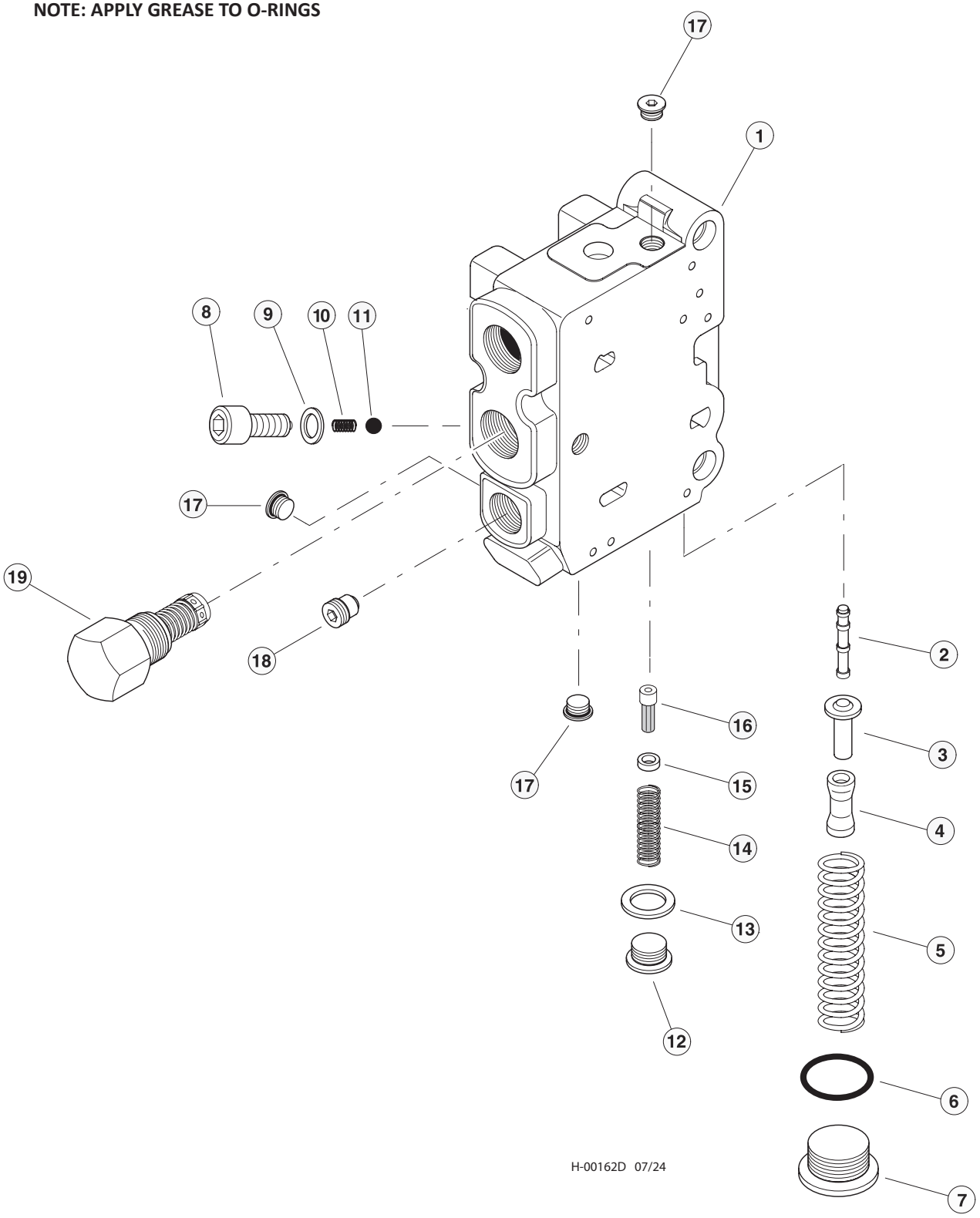

# H100-00287 - L90 VALVE SECTION - MAIN BOOM - OUTLET (DANGLE PROCESSOR WITH FIXED ARM)

| Item | Part # | Description | Qty. |
|---|---|---|---|
| | 23412 | VALVE SECTION, OUTLET | 1 |
| 1 | **SEE DESCRIPTION** | BODY, VALVE SECTION **CALL** | 1 |
| | 23431 | KIT, PILOT SUPPLY REDUCER (GREEN)(35 BAR)(SEE NOTE #1) | 1 |
| | 23432 | KIT, PILOT SUPPLY REDUCER (RED)(35 BAR)(SEE NOTE #1) | 1 |
| 2 | **SEE DESCRIPTION** | SPOOL, PILOT REDUCER **CALL** | 1 |
| 3 | **SEE DESCRIPTION** | RETAINER, SPRING **CALL** | 1 |
| 4 | **SEE DESCRIPTION** | SPACER, SPRING **CALL** | 1 |
| 5 | **SEE DESCRIPTION** | SPRING **CALL** | 1 |
| 6 | 0663909901 | O-RING | 1 |
| 7 | 9126244413 | PLUG | 1 |
| 8 | 9127320022 | PLUG | 1 |
| 9 | 06611005 | RING, SEAL | 1 |
| 10 | **SEE DESCRIPTION** | SPRING **CALL** | 1 |
| 11 | **SEE DESCRIPTION** | BALL, CHECK **CALL** | 1 |
| | 23433 | KIT, PILOT SUPPLY STRAINER | 1 |
| 12 | 9127320020 | PLUG | 1 |
| 13 | 06611020 | RING, SEAL | 1 |
| 14 | **SEE DESCRIPTION** | SPRING **CALL** | 1 |
| 15 | **SEE DESCRIPTION** | SPACER **CALL** | 1 |
| 16 | 9126386076 | STRAINER | 1 |
| 17 | 15412 | PLUG - 6408-FHP-6 | 3 |
| 18 | 393000K078 | PLUG, PILOT DRAIN | 1 |
| 19 | 393000K068 | COUNTER PRESS. VALVE - 130 PSI | 1 |

# H100-00290 - MAIN VALVE HYD. FITTINGS - DANGLE PROCESSOR, SQUIRT ARM (LEVELING)

**NOTE: HYDRAULIC FITTINGS GET 545 LOCTITE™**

**NOTE: APPLY GREASE TO O-RINGS**

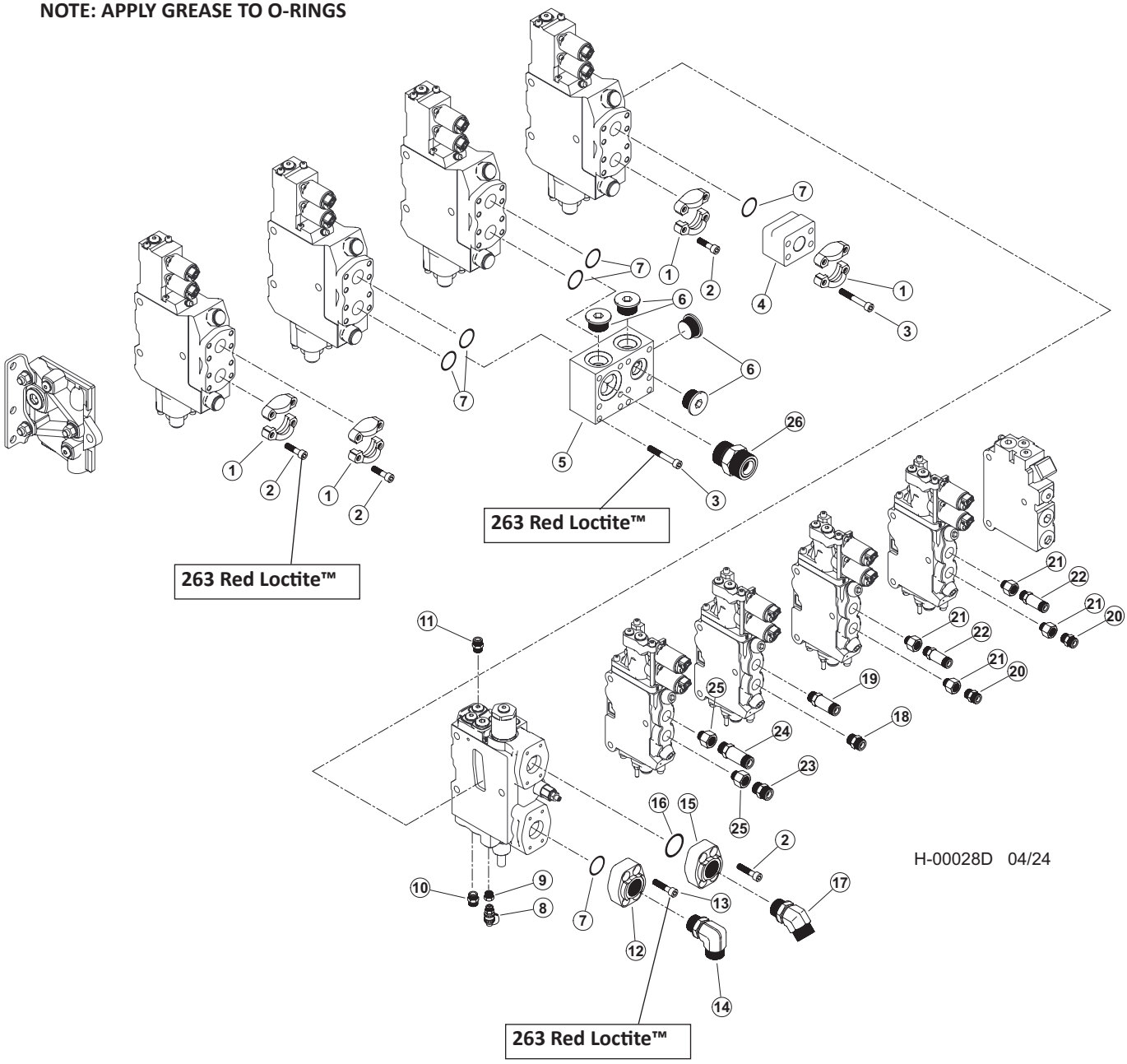

# H100-00290 - MAIN VALVE HYD. FITTINGS - DANGLE PROCESSOR, SQUIRT ARM (LEVELING)

| Item | Part # | Description | Qty. |
|---|---|---|---|
| | **57986** | **VALVE, MAIN 4K220/5L90 - DANGLE PROCESSOR, SQUIRT ARM - LEVELING** | |
| 1 | 15111 | KIT, SPLIT FLANGE CODE 61 1 INCH | 4 |
| 2 | 20444 | BOLT, ALLEN HEAD - 10MM-1.5P X 35MM **263 RED LOCTITE™** | 16 |
| 3 | 55664 | BOLT, ALLEN HEAD - 10MM-1.5P X 80MM **263 RED LOCTITE™** | 10 |
| 4 | 46248 | MANIFOLD, VALVE BLOCK SAE 1” CODE 62 | 1 |
| 5 | 47890 | MANIFOLD, COMBINED FLOW - DUAL K220 | 1 |
| 6 | 19847 | PLUG - 6408-HHP-16 | 4 |
| 7 | 15377 | O-RING - 1” SF (CODE 61/62) | 6 |
| 8 | 57819 | TAP, GAUGE PORT - #4 SAE ORING BOSS- ST | 1 |
| 9 | 16294 | BUSHING, REDUCER - 6410-6-4 | 1 |
| 10 | 18034 | CONNECTOR, STR - FF1852T-0606S | 1 |
| 11 | 22901 | CONNECTOR, STR - 6-8 F5OLO-S | 1 |
| 12 | 18397 | CONNECTOR, FLANGE PAD - W48-16-16U(C 62) | 1 |
| 13 | 18988 | BOLT, ALLEN HEAD - 12MM-1.75P X 45MM **263 Red Loctite™** | 4 |
| 14 | 21143 | ELBOW, 90 - 20-16 C5OLO-S | 1 |
| 15 | 17909 | CONNECTOR, FLANGE PAD-W46K-20-20 CODE 61 | 1 |
| 16 | 15378 | O-RING - 1.25” SF (CODE 61/62) | 1 |
| 17 | 57477 | FITTING, 20 V5OX-S | 1 |
| 18 | 50039 | CONNECTOR, STR - 848-TTO-10X10 | 1 |
| 19 | 52554 | CONNECTOR, STR LONG - 10X10 | 1 |
| 20 | 15117 | CONNECTOR, STR - FF1852T-0808S | 2 |
| 21 | 19290 | BUSHING, REDUCER - 6410-10-8 | 4 |
| 22 | 19091 | CONNECTOR, STR LONG - 848L-TTO-08X08 | 2 |
| 23 | 15152 | CONNECTOR, STR - FF1852T-1212S | 1 |
| 24 | 19092 | CONNECTOR, STR LONG - 848L-TTO-12X12 | 1 |
| 25 | 19289 | BUSHING, REDUCER - 6410-10X12 | 2 |
| 26 | 57492 | FITTING, 20 F5OX-S | 1 |

# H100-00300 - MAIN VALVE HYD. FITTINGS - DANGLE PROCESSOR, SQUIRT ARM (NON-LEVELING)

**NOTE: HYDRAULIC FITTINGS GET 545 LOCTITE™**

**NOTE: APPLY GREASE TO O-RINGS**

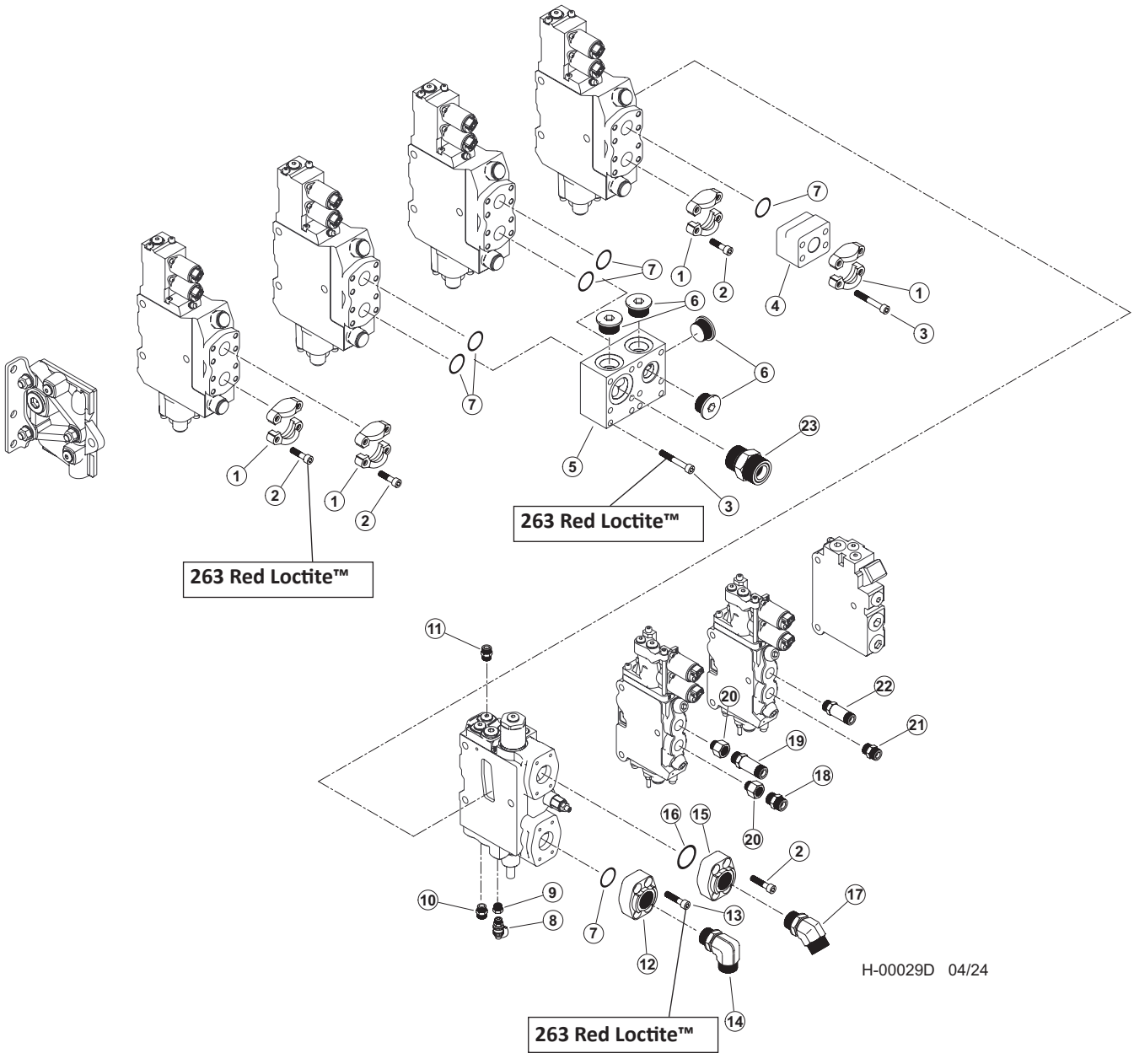

# H100-00300 - MAIN VALVE HYD. FITTINGS - DANGLE PROCESSOR, SQUIRT ARM (NON-LEVELING)

| Item | Part # | Description | Qty. |
|---|---|---|---|
| | **58000** | **VALVE, MAIN 4K220/5L90 - DANGLE PROCESSOR, SQUIRT ARM - NON-LEVELING** | |
| 1 | 15111 | KIT, SPLIT FLANGE CODE 61 1 INCH | 4 |
| 2 | 20444 | BOLT, ALLEN HEAD - 10MM-1.5P X 35MM 263 RED LOCTITE™ | 16 |
| 3 | 55664 | BOLT, ALLEN HEAD - 10MM-1.5P X 80MM 263 RED LOCTITE™ | 10 |
| 4 | 46248 | MANIFOLD, VALVE BLOCK SAE 1” CODE 62 | 1 |
| 5 | 47890 | MANIFOLD, COMBINED FLOW - DUAL K220 | 1 |
| 6 | 19847 | PLUG - 6408-HHP-16 | 4 |
| 7 | 15377 | O-RING - 1” SF (CODE 61/62) | 6 |
| 8 | 57819 | TAP, GAUGE PORT - #4 SAE ORING BOSS- ST | 1 |
| 9 | 16294 | BUSHING, REDUCER - 6410-6-4 | 1 |
| 10 | 18034 | CONNECTOR, STR - FF1852T-0606S | 1 |
| 11 | 22901 | CONNECTOR, STR - 6-8 F5OLO-S | 1 |
| 12 | 18397 | CONNECTOR, FLANGE PAD - W48-16-16U(C 62) | 1 |
| 13 | 18988 | BOLT, ALLEN HEAD - 12MM-1.75P X 45MM 263 RED LOCTITE™ | 4 |
| 14 | 21143 | ELBOW, 90 - 20-16 C5OLO-S | 1 |
| 15 | 17909 | CONNECTOR, FLANGE PAD-W46K-20-20 CODE 61 | 1 |
| 16 | 15378 | O-RING - 1.25” SF (CODE 61/62) | 1 |
| 17 | 57477 | FITTING, 20 V5OX-S | 1 |
| 18 | 15152 | CONNECTOR, STR - FF1852T-1212S | 1 |
| 19 | 19092 | CONNECTOR, STR LONG - 848L-TTO-12X12 | 1 |
| 20 | 19289 | BUSHING, REDUCER - 6410-10X12 | 2 |
| 21 | 50039 | CONNECTOR, STR - 848-TTO-10X10 | 1 |
| 22 | 52554 | CONNECTOR, STR LONG - 10X10 | 1 |
| 23 | 57492 | FITTING, 20 F5OX-S | 1 |

# H100-00310 - MAIN VALVE COMPONENTS - DANGLE PROCESSOR WITH SQUIRT ARM

**NOTE: APPLY GREASE TO O-RINGS**

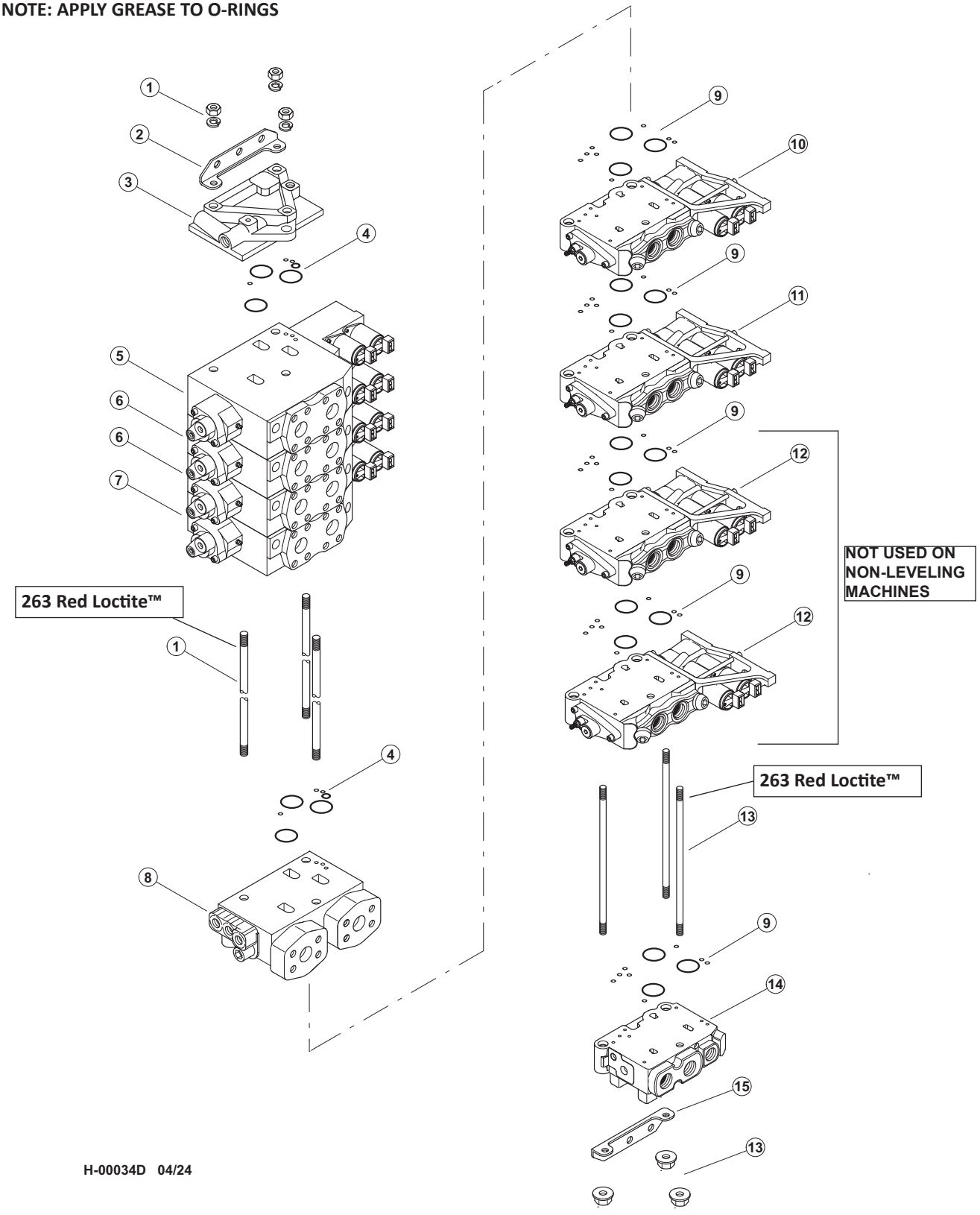

# H100-00310 - MAIN VALVE COMPONENTS - DANGLE PROCESSOR WITH SQUIRT ARM

| Item | Part # | Description | Qty. |
|---|---|---|---|
| | **57986** | **VALVE, MAIN 4K220/5L90 - DANGLE PROCESSOR, SQUIRT ARM - LEVELING** | |
| | **58000** | **VALVE, MAIN 4K220/5L90 - DANGLE PROCESSOR, SQUIRT ARM - NON-LEVELING** | |
| 1 | **SEE DESCRIPTION** | ROD, TIE - K220 (4-SECTION SPAN) **263 Red Loctite™ CALL** | 1 |
| 2 | **SEE DESCRIPTION** | KIT, BRACKET - K220 **CALL** | 1 |
| 3 | **SEE DESCRIPTION** | END COVER, K220 VALVE (US) **CALL** | 1 |
| 4 | 24649 | KIT, SEALS - VOAC INTERSECTION (9120092315) | 5 |
| 5 | **SEE DESCRIPTION** | VALVE SECTION, K220 - STICK BOOM (MR) **CALL** | 1 |
| 6 | **SEE DESCRIPTION** | VALVE SECTION, K220 - PROCESSOR (MR) **CALL** | 2 |
| 7 | **SEE DESCRIPTION** | VALVE SECTION, K220 - MAIN BOOM (MR) **CALL** | 1 |
| 8 | **SEE DESCRIPTION** | INLET SECTION **CALL** | 1 |
| 9 | 23404 | KIT, SEAL REPAIR - L90LS FACE | 3/5 |
| 10 | **SEE DESCRIPTION** | VALVE SECTION, L90 - SQUIRT BOOM (TCT) **CALL** | 1 |
| 11 | **SEE DESCRIPTION** | VALVE SECTION, L90 - HEAD ROTATE (TCT) **CALL** | 1 |
| 12 | **SEE DESCRIPTION** | VALVE SECTION, L90 - CAB LEVEL (TCT) **CALL** | 2 |
| 13 | 24781 | TIE ROD KIT - 4 SECTION - L90 (LEVELING) **263 RED LOCTITE™** | 1 |
| 13 | **SEE DESCRIPTION** | TIE ROD KIT - 2 SECTION - L90 (NON-LEVELING) **263 RED LOCTITE™ CALL** | 1 |
| 13 | **SEE DESCRIPTION** | OUTLET (US) **CALL** | 1 |
| 14 | **SEE DESCRIPTION** | KIT, BRACKET - L90 **CALL** | 1 |

# H100-00311 - K220 MAIN VALVE SECTION - STICK BOOM - DANGLE PROCESSOR WITH SQUIRT ARM

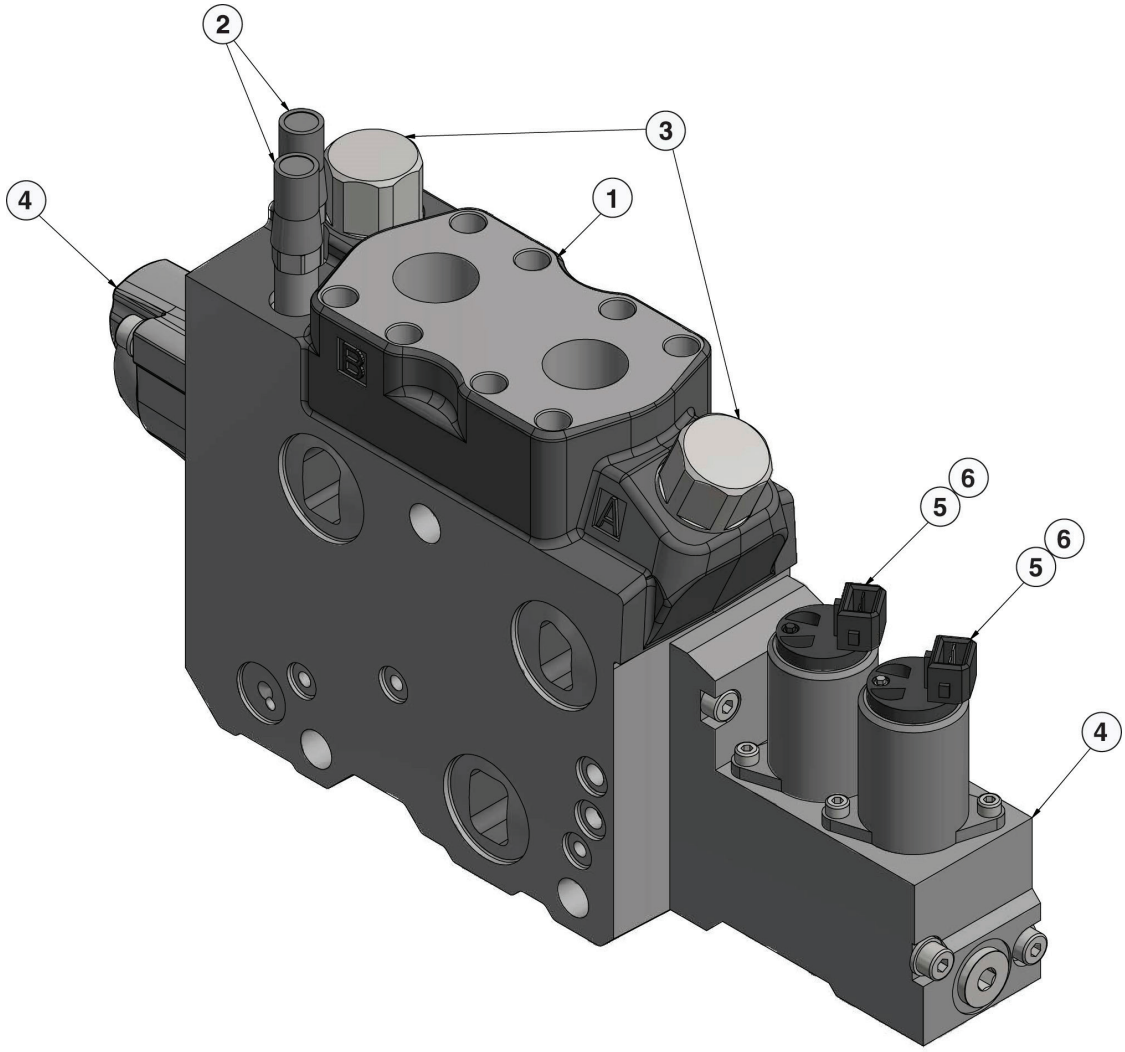


H-00290D 06/25

| Item | Part # | Description | Qty. |
|---|---|---|---|
| 1 | 699210 | VALVE SECTION, STICK - K220 | 1 |
| 2 | 699170 | SUPPLY REDUCER | 2 |
| 3 | 56161 | PORT RELIEF VALVE | 2 |
| 4 | 26424 | CAP KIT | 1 |
| 5 | 20976 | SOLENOID | 2 |
| 6 | 19213043 | PILOT ORIFICE | 1 |
| | 19217324 | PILOT ORIFICESPOOL **(NOT SHOWN)** | 1 |
| | 19217318 | COMPENSATOR **(NOT SHOWN)** | 1 |
| | 24649 | FACE SEAL KIT **(NOT SHOWN)** | 1 |
| | | | 1 |

# H100-00312 - K220 MAIN VALVE SECTION - PROCESSOR - DANGLE PROCESSOR WITH SQUIRT ARM

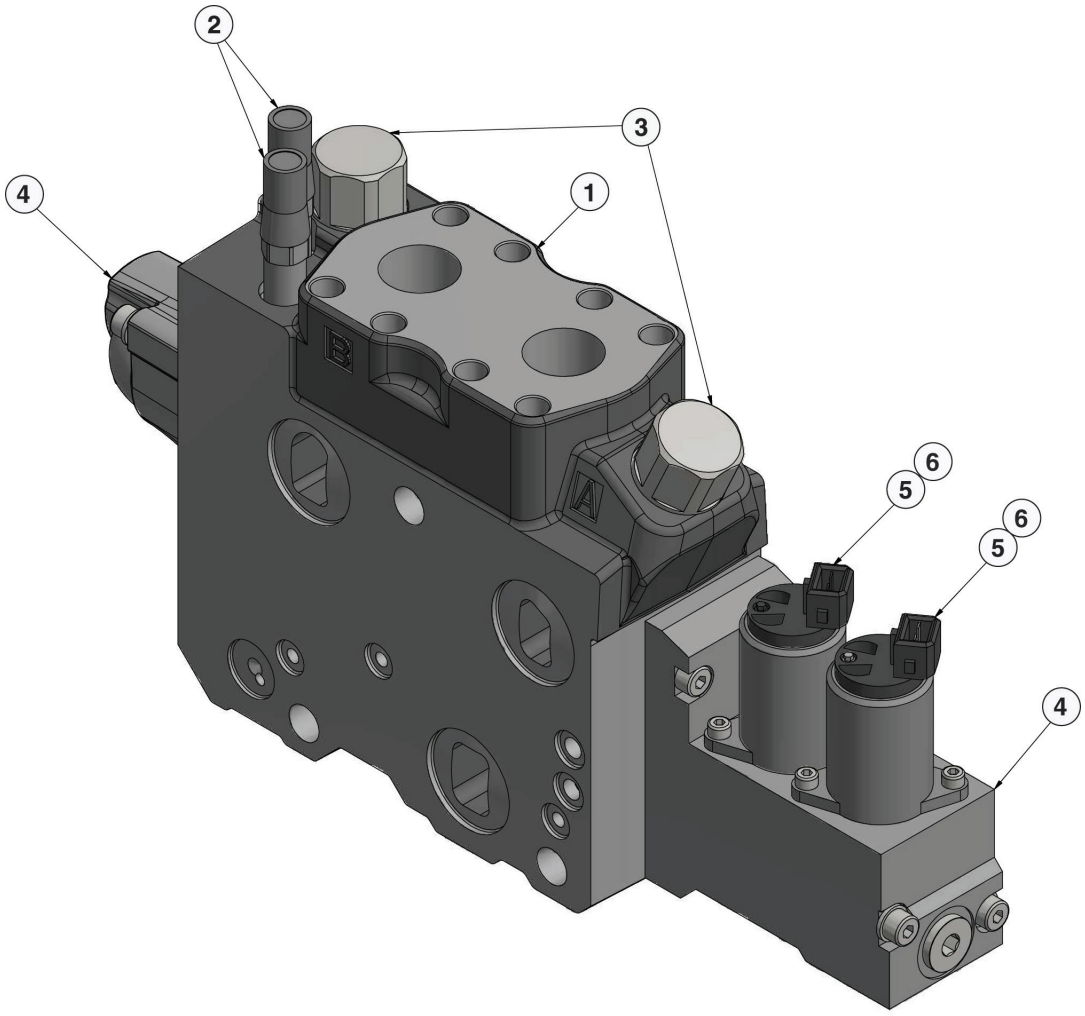


H-00158D 07/24

| Item | Part # | Description | Qty. |
|---|---|---|---|
| 1 | 699210 | VALVE SECTION, PROCESSOR - K220 | 1 |
| 2 | 699170 | SUPPLY REDUCER | 2 |
| 3 | 56472 | PORT RELIEF VALVE | 2 |
| 4 | 26424 | CAP KIT | 1 |
| 5 | 20976 | SOLENOID | 2 |
| 6 | 19213047 | PILOT ORIFICE | 1 |
| | 19217325 | SPOOL **(NOT SHOWN)** | 1 |
| | 19215649 | COMPENSATOR **(NOT SHOWN)** | 1 |
| | 24649 | FACE SEAL KIT | 1 |

# H100-00313 - K220 MAIN VALVE SECTION - MAIN BOOM - DANGLE PROCESSOR WITH SQUIRT ARM

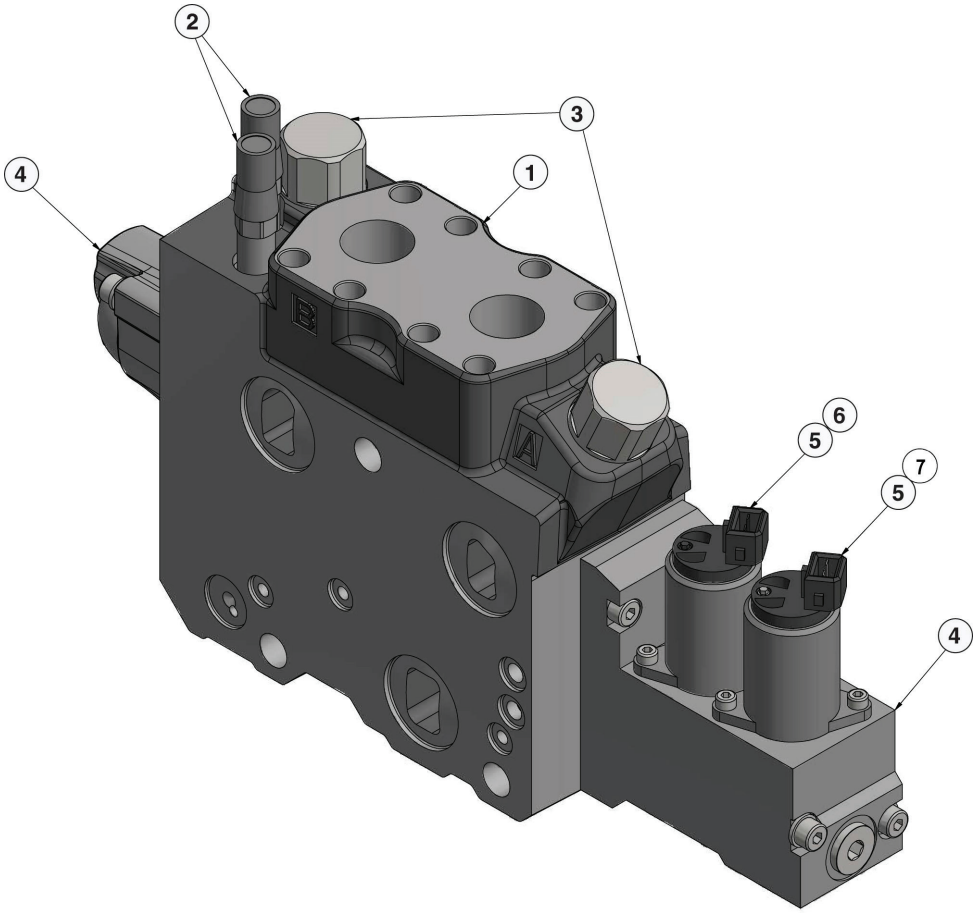


H-00291D 06/25

| Item | Part # | Description | Qty. |
|---|---|---|---|
| 1 | 699210 | VALVE SECTION, MAIN BOOM - K220 | 1 |
| 2 | 699170 | SUPPLY REDUCER | 2 |
| 3 | 56161 | PORT RELIEF VALVE | 2 |
| 4 | 19217353 | CAP KIT | 1 |
| 5 | 20976 | SOLENOID | 2 |
| 6 | 19213043 | PILOT ORIFICE | 1 |
| 7 | 19213044 | PILOT ORIFICE | 1 |
| | 19217359 | SPOOL **(NOT SHOWN)** | 1 |
| | 19217319 | COMPENSATOR **(NOT SHOWN)** | 1 |
| | 24649 | FACE SEAL KIT | |

# H100-00314 - K220 MAIN VALVE SECTION - INLET - DANGLE PROCESSOR WITH SQUIRT ARM

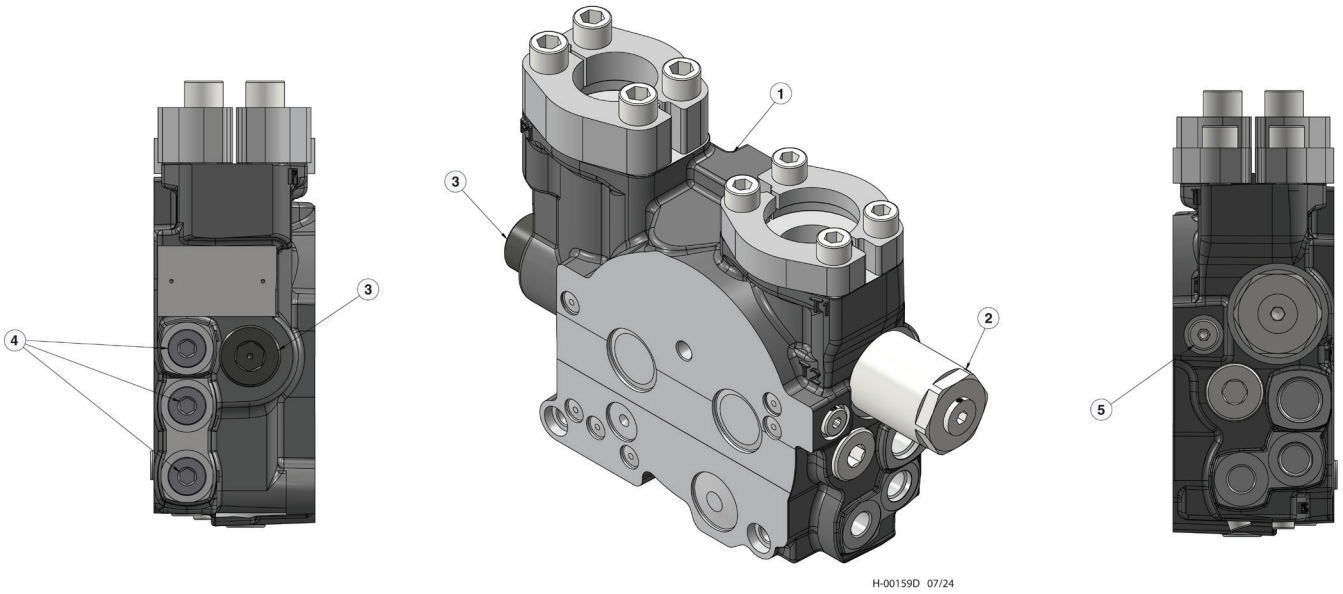


| Item | Part # | Description | Qty. |
|---|---|---|---|
| | 20089048 | INLET SECTION | 1 |
| 1 | 20089023 | COMBO LS INLET | 1 |
| 2 | 19217259 | COUNTER PRESSURE VLV | 1 |
| 3 | 19217256 | RELIEF MAIN | 3 |
| 4 | 19215123 | PLUG | 1 |
| 5 | 19206051 | SCREW | 1 |

# H100-00315 - L90 MAIN VALVE SECTION - SQUIRT BOOM - DANGLE PROCESSOR WITH SQUIRT ARM

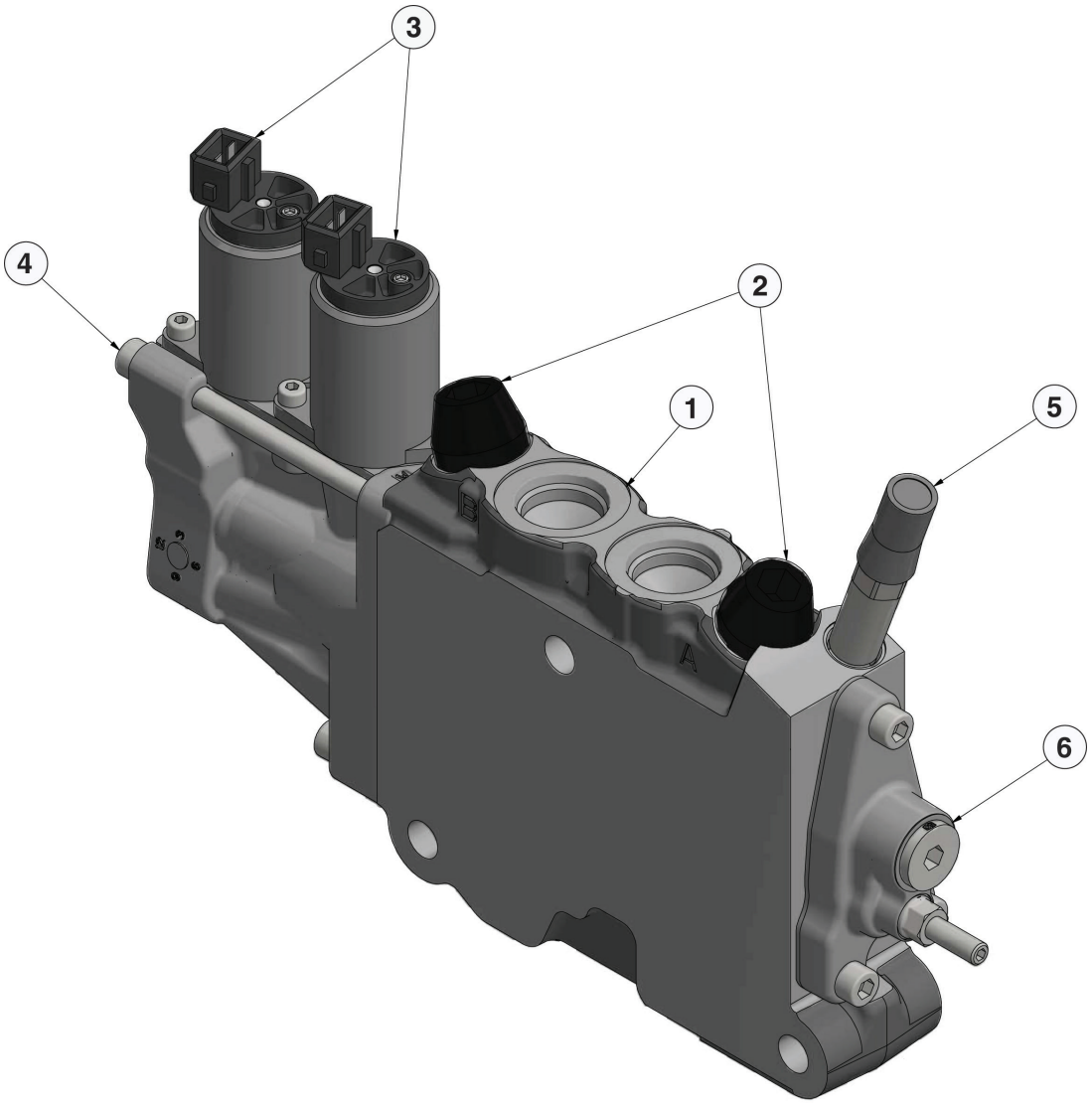


H-00160D 07/24

| Item | Part # | Description | Qty. |
|---|---|---|---|
| 1 | 20047199 | VALVE SECTION, L90 - HEAD ROTATE | 1 |
| 2 | 23413 | PORT RV | 2 |
| 3 | 20068454 | SOLENOID | 2 |
| 4 | 23416 | B SIDE ACTUATOR CAP | 1 |
| 5 | 699170 | SUPPLY REDUCER | 1 |
| 6 | 23414 | EC2 KIT W/O LEVER SHAFT | 1 |
| | 19213577 | DOUBLE ACTING SPOOL **(NOT SHOWN)** | 1 |
| | 20047208 | COMPENSATOR **(NOT SHOWN)** | 1 |
| | 23404 | FACE SEAL KIT | 1 |

# H100-00316 - L90 MAIN VALVE SECTION - MAIN BOOM - HEAD ROTATE DANGLE PROCESSOR WITH SQUIRT ARM

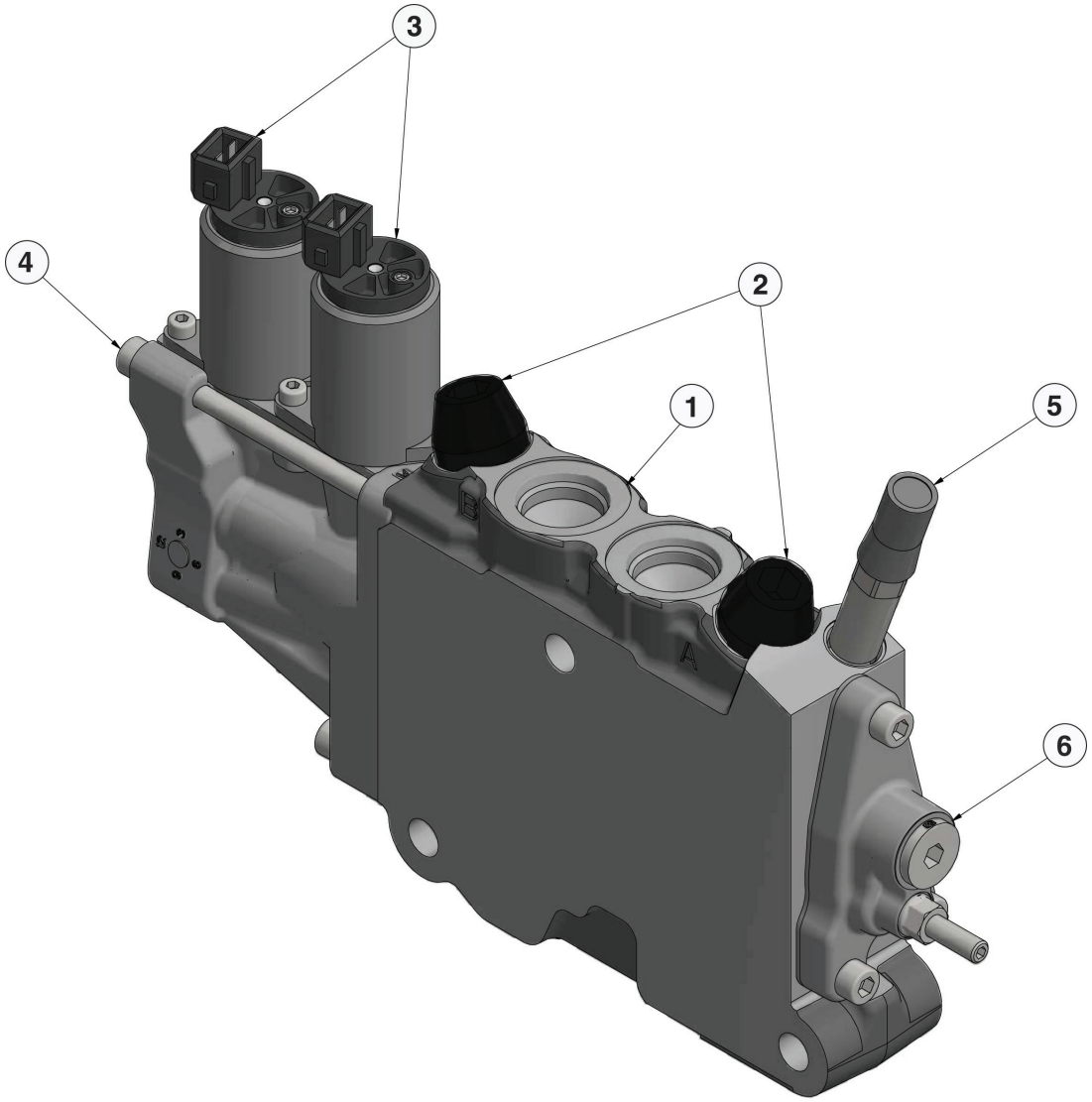


H-00160D 07/24

| Item | Part # | Description | Qty. |
|---|---|---|---|
| 1 | 20047199 | VALVE SECTION, L90 - HEAD ROTATE | 1 |
| 2 | 19213479 | PORT RV | 2 |
| 3 | 20068454 | SOLENOID | 2 |
| 4 | 23416 | B SIDE ACTUATOR CAP | 1 |
| 5 | 699170 | SUPPLY REDUCER | 1 |
| 6 | 23414 | EC2 KIT W/O LEVER SHAFT | 1 |
| | 19213554 | DOUBLE ACTING SPOOL **(NOT SHOWN)** | 1 |
| | 20047205 | COMPENSATOR **(NOT SHOWN)** | 1 |
| | 23404 | FACE SEAL KIT | 1 |

# H100-00317 - L90 MAIN VALVE SECTION - CAB LEVEL - DANGLE PROCESSOR WITH SQUIRT ARM

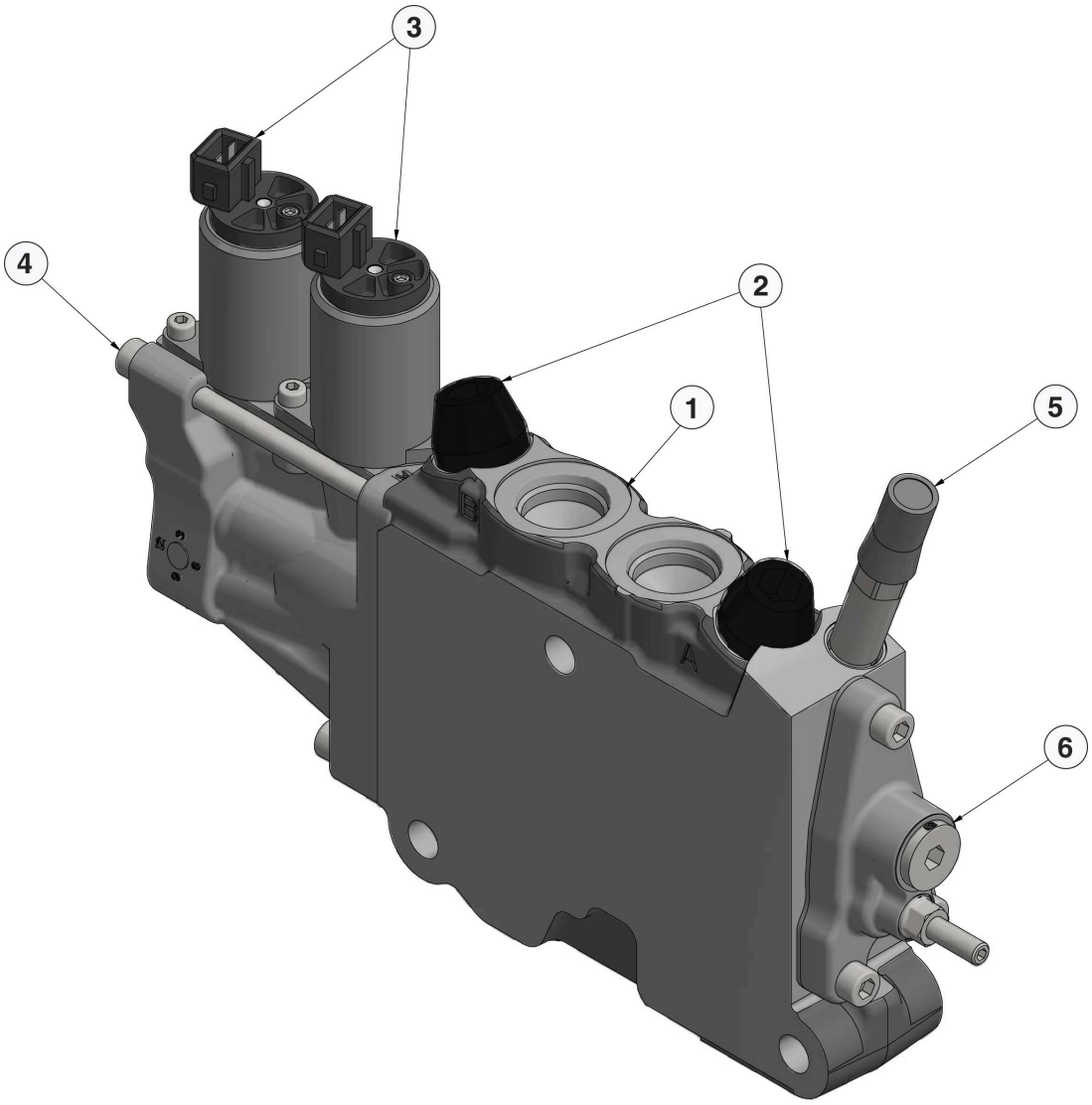


H-00160D 07/24

| Item | Part # | Description | Qty. |
|---|---|---|---|
| 1 | 20047199 | VALVE SECTION, L90 - LEVEL | 1 |
| 2 | 19213483 | PORT RV | 2 |
| 3 | 20068454 | SOLENOID | 2 |
| 4 | 23416 | B SIDE ACTUATOR CAP | 1 |
| 5 | 699170 | SUPPLY REDUCER | 1 |
| 6 | 23414 | EC2 KIT W/O LEVER SHAFT | 1 |
| | 19213584 | SPOOL **(NOT SHOWN)** | 1 |
| | 20047207 | COMPENSATOR **(NOT SHOWN)** | 1 |
| | 23404 | FACE SEAL KIT **(NOT SHOWN)** | 1 |

# H100-00318 - L90 VALVE SECTION - MAIN BOOM - OUTLET - DANGLE PROCESSOR WITH SQUIRT ARM

**NOTE: APPLY GREASE TO O-RINGS**

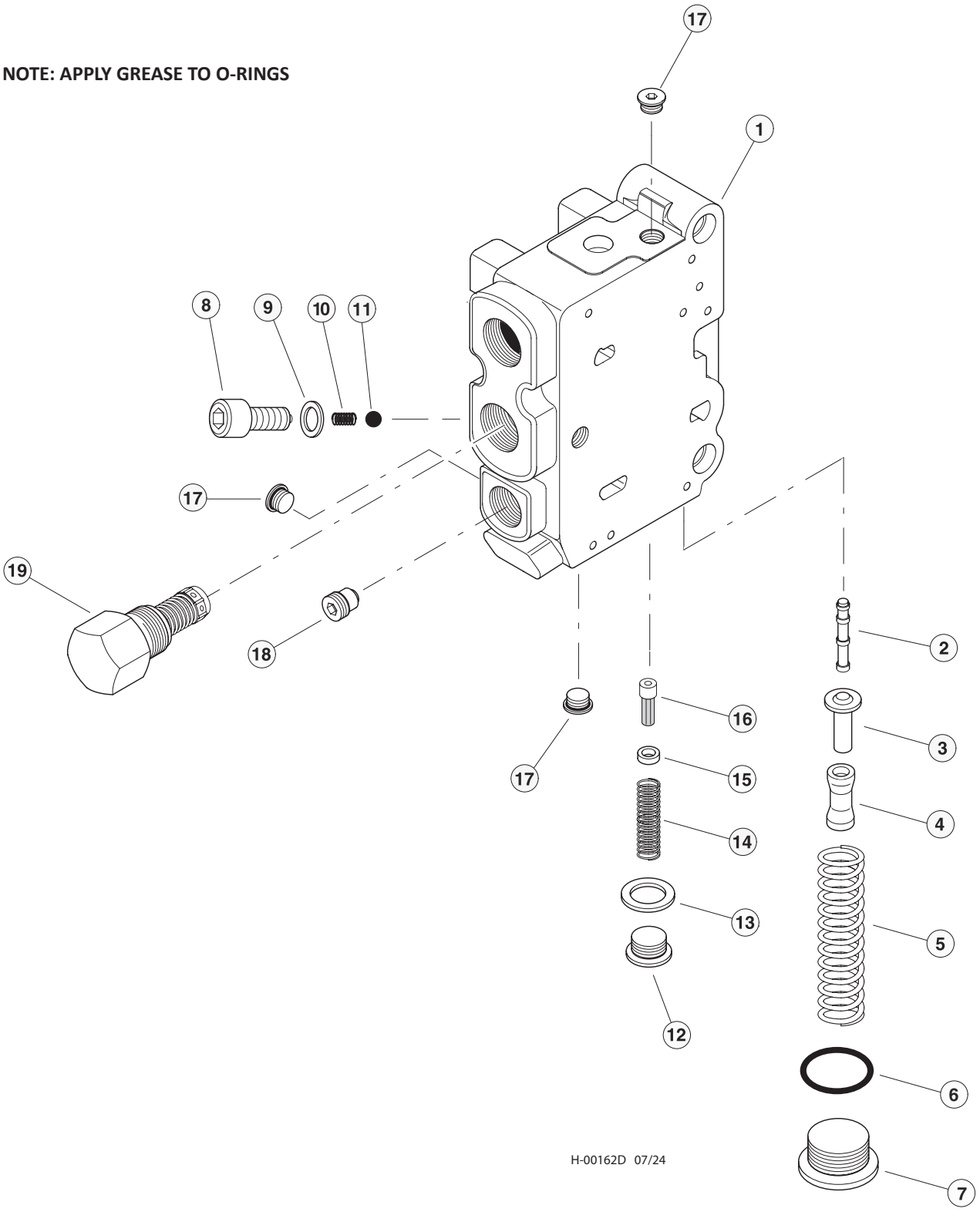

# H100-00318 - L90 VALVE SECTION - MAIN BOOM - OUTLET - DANGLE PROCESSOR WITH SQUIRT ARM

| Item | Part # | Description | Qty. |
|---|---|---|---|
| | 23412 | VALVE SECTION, OUTLET | 1 |
| 1 | **SEE DESCRIPTION** | BODY, VALVE SECTION **CALL** | 1 |
| | 23431 | KIT, PILOT SUPPLY REDUCER (GREEN)(35 BAR)(SEE NOTE #1) | 1 |
| | 23432 | KIT, PILOT SUPPLY REDUCER (RED)(35 BAR)(SEE NOTE #1) | 1 |
| 2 | **SEE DESCRIPTION** | SPOOL, PILOT REDUCER **CALL** | 1 |
| 3 | **SEE DESCRIPTION** | RETAINER, SPRING **CALL** | 1 |
| 4 | **SEE DESCRIPTION** | SPACER, SPRING **CALL** | 1 |
| 5 | **SEE DESCRIPTION** | SPRING **CALL** | 1 |
| 6 | 0663909901 | O-RING | 1 |
| 7 | 9126244413 | PLUG | 1 |
| 8 | 9127320022 | PLUG | 1 |
| 9 | 06611005 | RING, SEAL | 1 |
| 10 | **SEE DESCRIPTION** | SPRING **CALL** | 1 |
| 11 | **SEE DESCRIPTION** | BALL, CHECK **CALL** | 1 |
| | 23433 | KIT, PILOT SUPPLY STRAINER | 1 |
| 12 | 9127320020 | PLUG | 1 |
| 13 | 06611020 | RING, SEAL | 1 |
| 14 | **SEE DESCRIPTION** | SPRING **CALL** | 1 |
| 15 | **SEE DESCRIPTION** | SPACER **CALL** | 1 |
| 16 | 9126386076 | STRAINER | 1 |
| 17 | 15412 | PLUG - 6408-FHP-6 | 3 |
| 18 | C393000K078 | PLUG, PILOT DRAIN | 1 |
| 19 | 393000K068 | COUNTER PRESS. VALVE - 130 PSI | 1 |

# H100-00320 - BOOM PLATE HYD. FITTINGS - DISC SAW/BAR SAW COMBO ATTACHMENTS

**NOTE: HYDRAULIC FITTINGS GET 545 LOCTITE™**

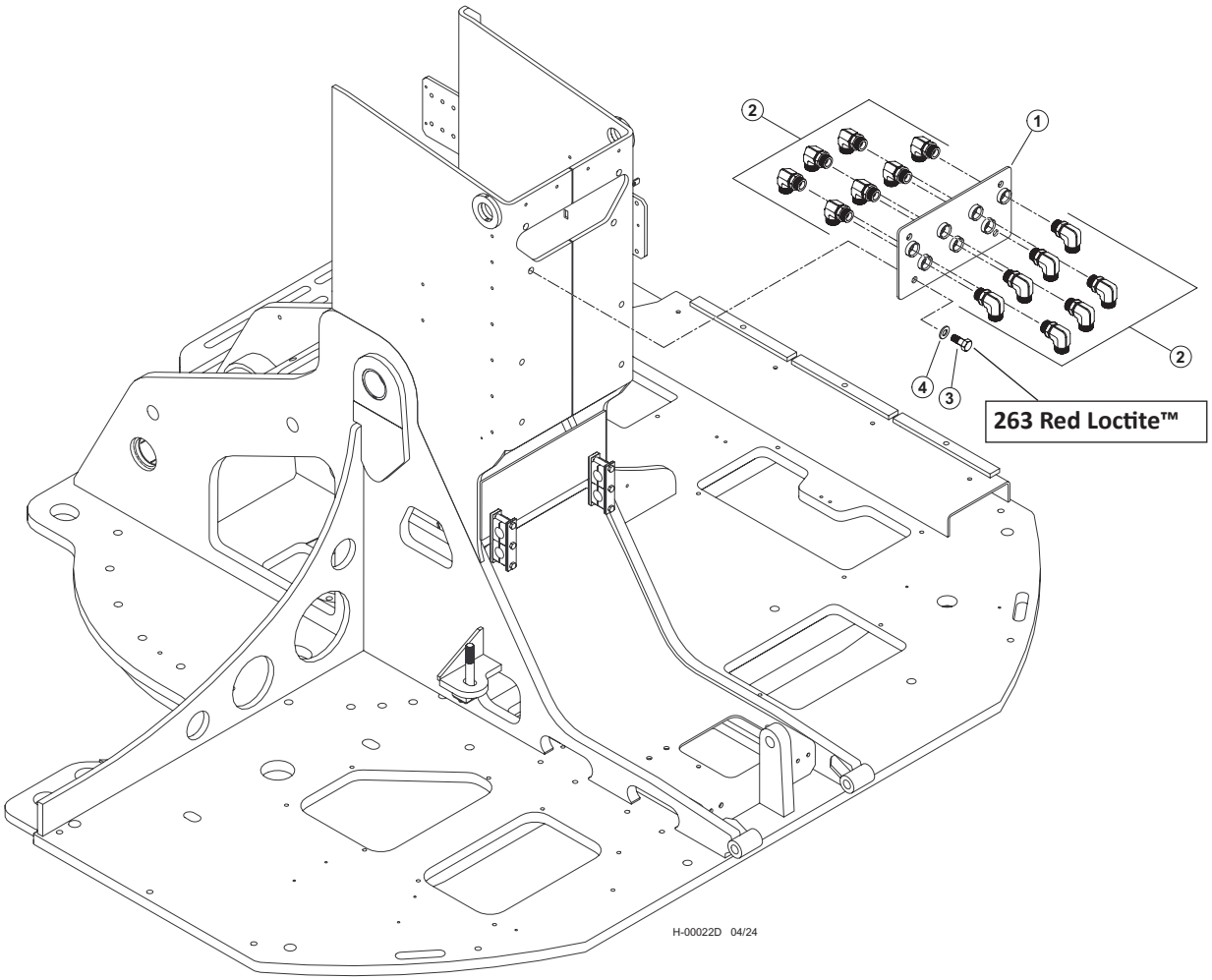


| Item | Part # | Description | Qty. |
|---|---|---|---|
| 1 | 60278 | WELDMENT, BUNCHER BOOM BH PLATE | 1 |
| 2 | 15528 | ELBOW, 90 - FF1868T-1616S | 14 |
| 3 | 10739 | BOLT - .5” X 1.5” **263 RED LOCTITE™** | 4 |
| 4 | 10804 | WASHER, FLAT - .5” | 4 |

# H100-00330 - BOOM PLATE HYD. FITTINGS - DISC SAW & PROCESSOR ATTACHMENTS

**NOTE: HYDRAULIC FITTINGS GET 545 LOCTITE™**

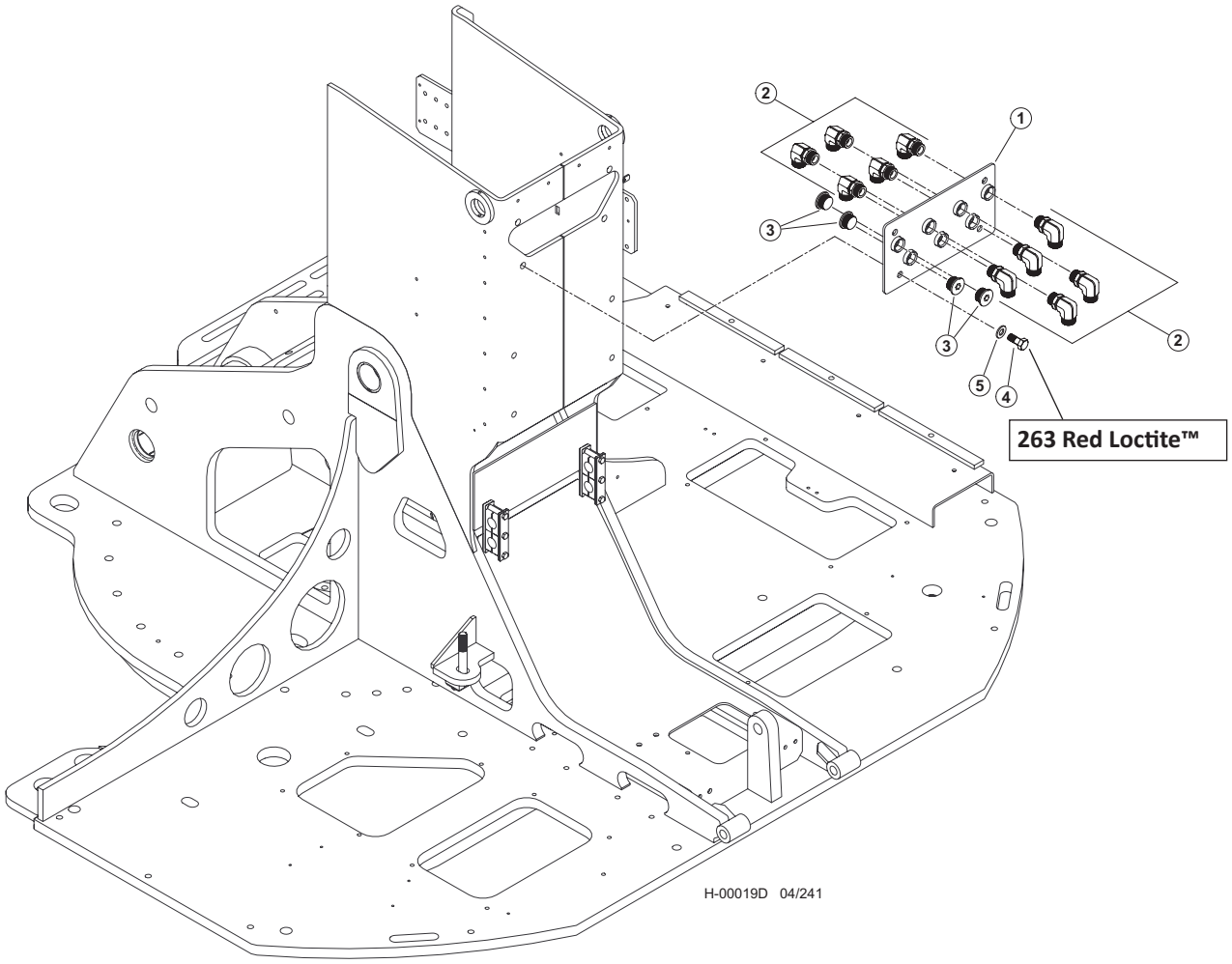


| Item | Part # | Description | Qty. |
|---|---|---|---|
| 1 | 60278 | WELDMENT, BUNCHER BOOM BH PLATE | 1 |
| 2 | 15528 | ELBOW, 90 - FF1868T-1616S | 10 |
| 3 | 19847 | PLUG - 6408-HHP-16 | 4 |
| 4 | 10739 | BOLT - .5” X 1.5” **263 RED LOCTITE™** | 4 |
| 5 | 10804 | WASHER, FLAT - .5” | 4 |

# W450/WS300 MAIN CONTROL VALVES

# H200-00100 - MAIN VALVE INSTALLATION - (W450/W300 VALVE)

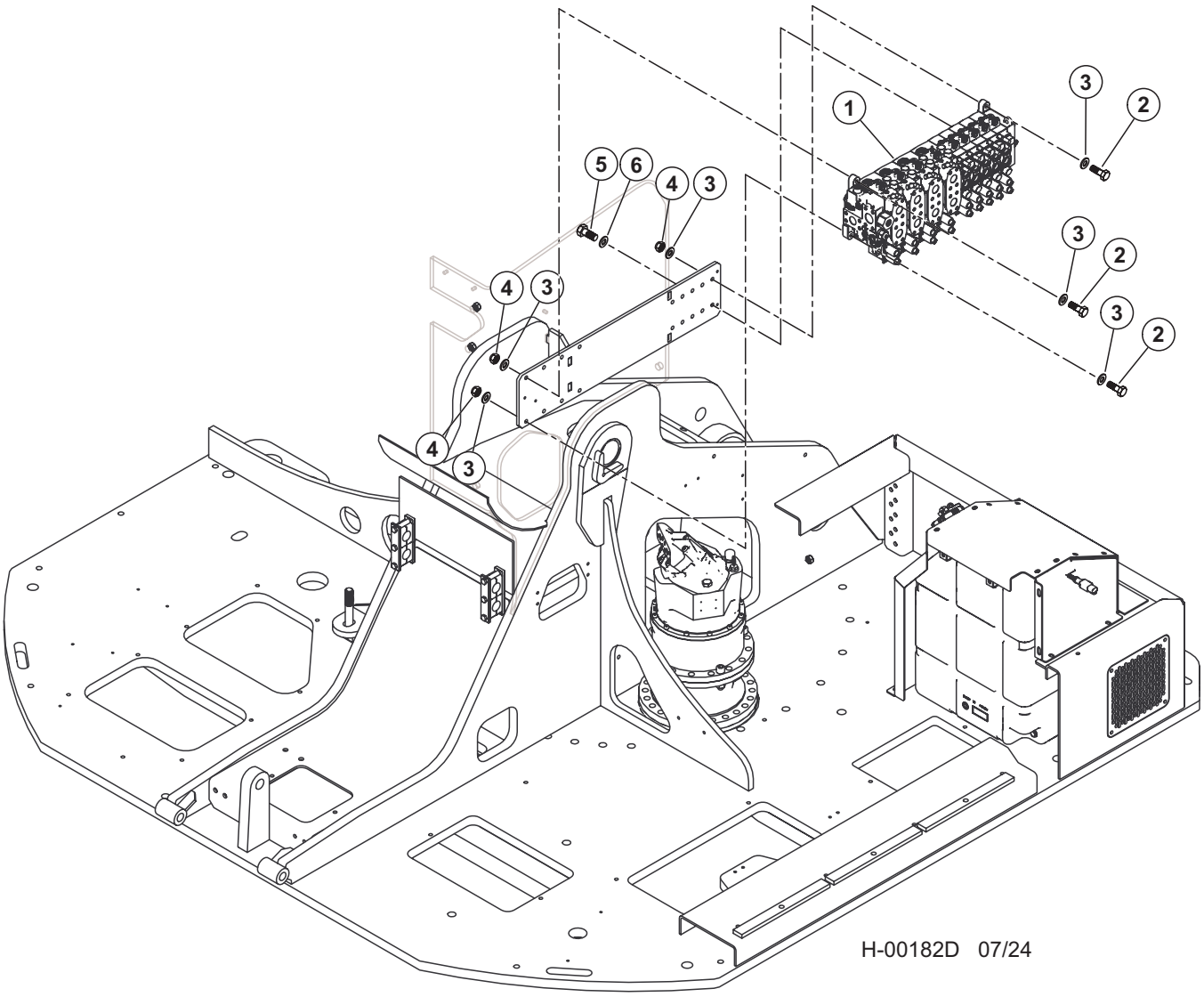


| Item | Part # | Description | Qty. |
|---|---|---|---|
| 1 | 58326 | VALVE, VA450 - DISC SAW (3VA/ 5 K220) | 1 |
| | 53327 | VALVE, VA450 - DISC NONLVL (3VA/ 3 K300) | 1 |
| | 53308 | VALVE, VA450 - DISC / BAR (4VA/ 5 K220) | 1 |
| | 53334 | VALVE, VA450 - TN DISC/PRO (4VA/ 3 K300) | 1 |
| | 53322 | VALVE, VA450 - PROC/AUST (4-450/ 3-300) | 1 |
| | 53330 | VALVE, VA450 - SKIDMORE(4-450/1-300) | 1 |
| | 533280 | VALVE, VA450 - SATCO TL755 (3-450 /3-300 | 1 |
| | 659740 | VALVE, VA450 - PRCSR, FXD, DANGLE | 1 |
| | 53336 | VALVE, VA450 - PRO/HD SQUIRT (3450/4300 | 1 |
| 2 | 23265 | BOLT - .375” X 2.25” | 3 |
| 3 | 10802 | WASHER, FLAT - .375” | 6 |
| 4 | 10813 | NUT, LOCK - .375” | 3 |
| 5 | 18415 | BOLT - 12MM-1.75P X 30MM | 1 |
| 6 | 15534 | WASHER, SAE FLAT - .5” | 1 |

# H200-00110 - MAIN VALVE HYD. FITTINGS - DISC SAW (LEVELING) - (W450/W300 VALVE)

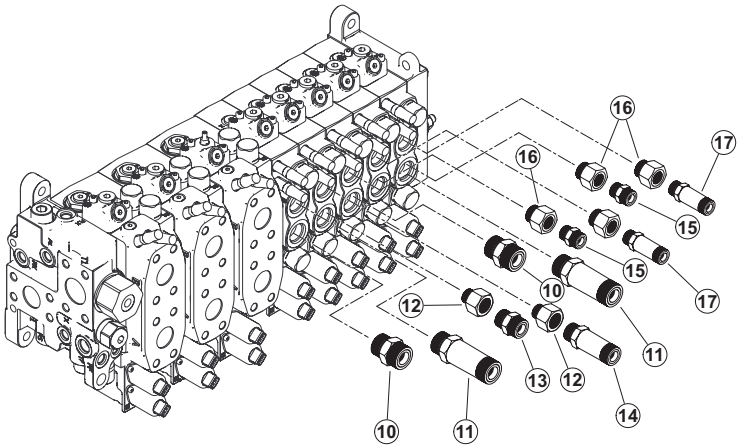

**NOTE: HYDRAULIC FITTINGS GET 545 LOCTITE™**

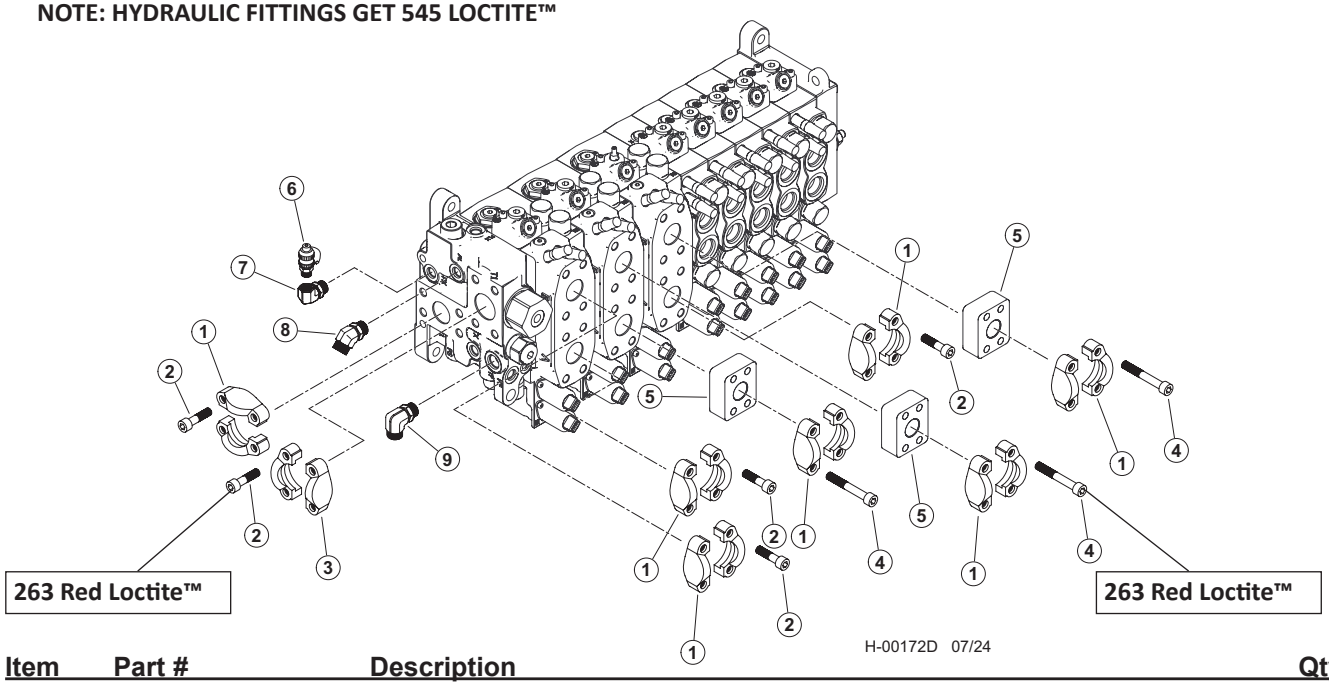


| Item | Part # | Description | Qty. |
|---|---|---|---|
| | 58326 | VALVE, VA450 - DISC SAW (LEVELING) | 1 |
| | 65975 | KIT, HYD FITTING KIT, 450, DISCSAW BASIC | 1 |
| | 65613 | KIT, FITTING DISC LEVEL 450V D-SERIES | 1 |
| 1 | 65457 | 20SFXO & M12 SPLIT FLANGE (CODE 62) | 7 |
| 2 | 18988 | BOLT, ALLEN HEAD - 12MM-1.75P X 45MM **263 RED LOCTITE™** | 20 |
| 3 | 15186 | KIT, SPLIT FLANGE - 1.5" (CODE 61) | 1 |
| 4 | 59135 | BOLT, SHC, 12.9 - M12-1.75P X 80mm **263 RED LOCTITE™** | 12 |
| 5 | 65458 | ANCHOR-ASX-20GP STANDOFF | 3 |
| 6 | 57820 | TAP, GAUGE PORT # 6 SAE - Oring Boss | 1 |
| 7 | 58348 | FITTING, ELBOW 6-AOEG5-5 | 1 |
| 8 | 23015 | ELBOW, 45 - 6 V5OLO-S | 1 |
| 9 | 16360 | ELBOW, 90 - FF1868T-0808S | 1 |
| 10 | 15152 | CONNECTOR, STR - FF1852T-1212S | 2 |
| 11 | 19092 | CONNECTOR, STR LONG - 848L-TTO-12X12 | 2 |
| 12 | 16358 | BUSHING, REDUCER - 6410-12-10 | 2 |
| 13 | 50039 | CONNECTOR, STR - 848-TTO-10X10 | 1 |
| 14 | 52554 | CONNECTOR, STR LONG - 10X10 | 1 |
| 15 | 15117 | CONNECTOR, STR - FF1852T-0808S | 2 |
| 16 | 20067 | BUSHING, REDUCER - 6410-12-8 | 4 |
| 17 | 19091 | CONNECTOR, STR LONG - 848L-TTO-08X08 | 2 |

# H200-00120 - MAIN VALVE HYD. FITTINGS - DISC SAW (NON-LEVELING) (W450/W300 VALVE)

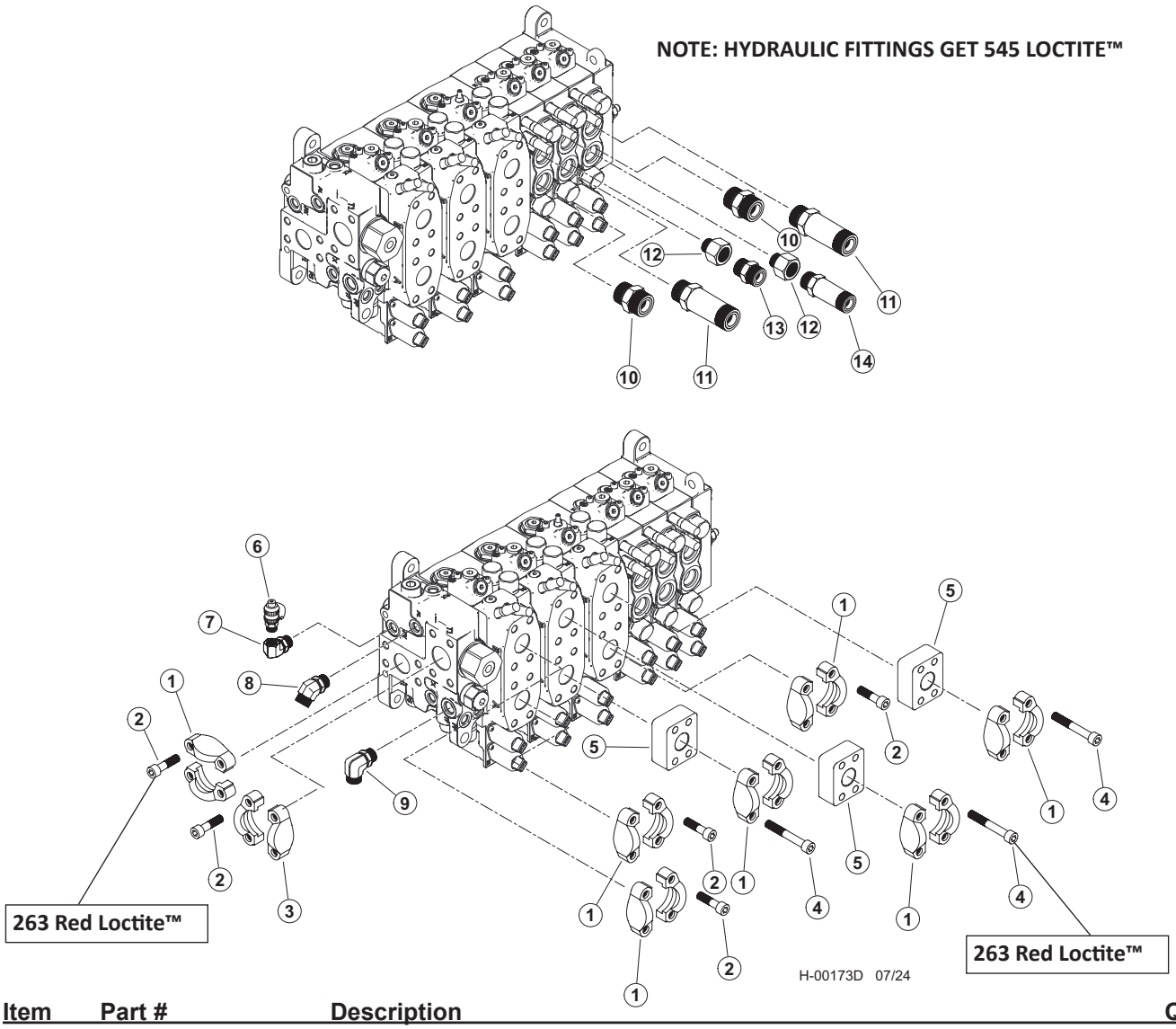


| Item | Part # | Description | Qty. |
|---|---|---|---|
| | 53327 | VALVE, VA450 - DISC SAW (NON-LEVELING) | 1 |
| | 65975 | KIT, HYD FITTING KIT, 450, DISCSAW BASIC | 1 |
| 1 | 65457 | 20SFXO & M12 SPLIT FLANGE (CODE 62) | 7 |
| 2 | 18988 | BOLT, ALLEN HEAD - 12MM-1.75P X 45MM **263 RED LOCTITE™** | 20 |
| 3 | 15186 | KIT, SPLIT FLANGE - 1.5” (CODE 61) | 1 |
| 4 | 59135 | BOLT, SHC, 12.9 - M12-1.75P X 80mm **263 RED LOCTITE™** | 12 |
| 5 | 65458 | ANCHOR-ASX-20GP STANDOFF | 3 |
| 6 | 57820 | TAP, GAUGE PORT # 6 SAE - Oring Boss | 1 |
| 7 | 58348 | FITTING, ELBOW 6-AOEG5-5 | 1 |
| 8 | 23015 | ELBOW, 45 - 6 V5OLO-S | 1 |
| 9 | 16360 | ELBOW, 90 - FF1868T-0808S | 1 |
| 10 | 15152 | CONNECTOR, STR - FF1852T-1212S | 2 |
| 11 | 19092 | CONNECTOR, STR LONG - 848L-TTO-12X12 | 2 |
| 12 | 16358 | BUSHING, REDUCER - 6410-12-10 | 2 |
| 13 | 50039 | CONNECTOR, STR - 848-TTO-10X10 | 1 |
| 14 | 52554 | CONNECTOR, STR LONG - 10X10 | 1 |

# H200-00121 - WS450 MAIN VALVE SECTION - INLET - (DISC SAW)

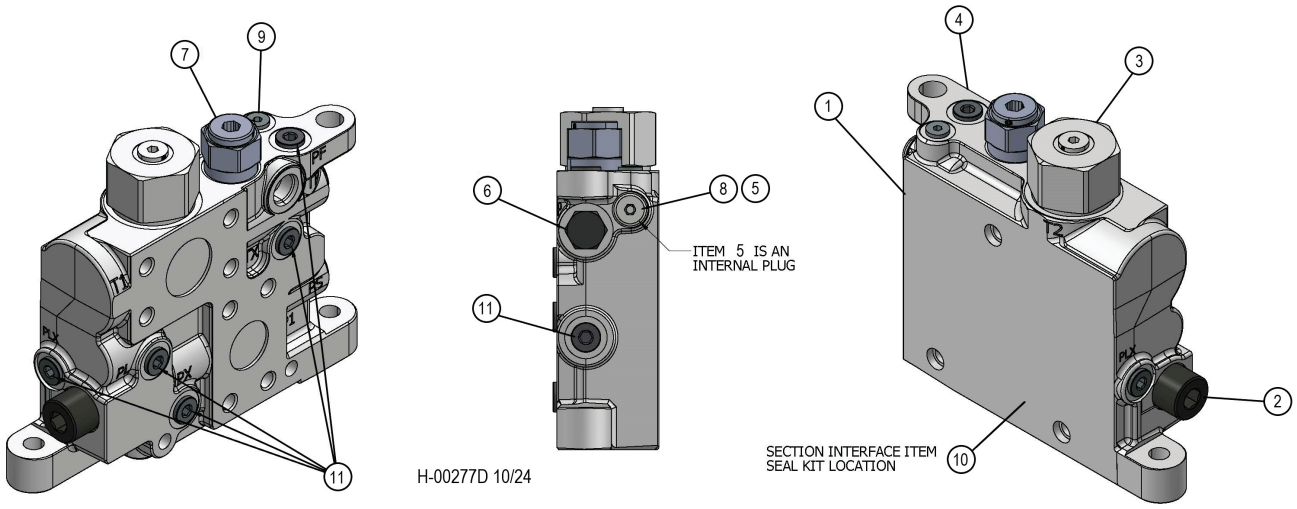


| Item | Part # | Description | Qty. |
|---|---|---|---|
| 1 | 20106626 | VA450 INLET | 1 |
| 2 | 19217256 | PLC182-330-20 RELIEF MAIN R/V 330 BAR 4785 PSI | 1 |
| 3 | 20106606 | MF5 COUNTER PRESSURE VALVE 6764842 | 1 |
| 4 | 20110560 | VA450 BLANK INLET SECTION LSB450 | 1 |
| 5 | 20110554 | TP INTERNAL PLUG | 1 |
| 6 | 19220867 | CHECK CART C08-2 STD 3PSI | 1 |
| 7 | 20090649 | VA300/450 REDUCING VALVE R35 | 1 |
| 8 | 20110562 | PLUG 14MM X 1.5 METRIC | 1 |
| 9 | 19213753 | HOLLOW HEX PLUG SAE-ORB | 1 |
| 10 | 54880 | SEAL KIT VA300 & VA450 INTERSECT | 1 |
| 11 | 19215123 | PLUG #6 SAE HOLLOW HEX | 6 |

# H200-00122 - W450 MAIN VALVE SECTION - TOOL TILT - (DISC SAW )

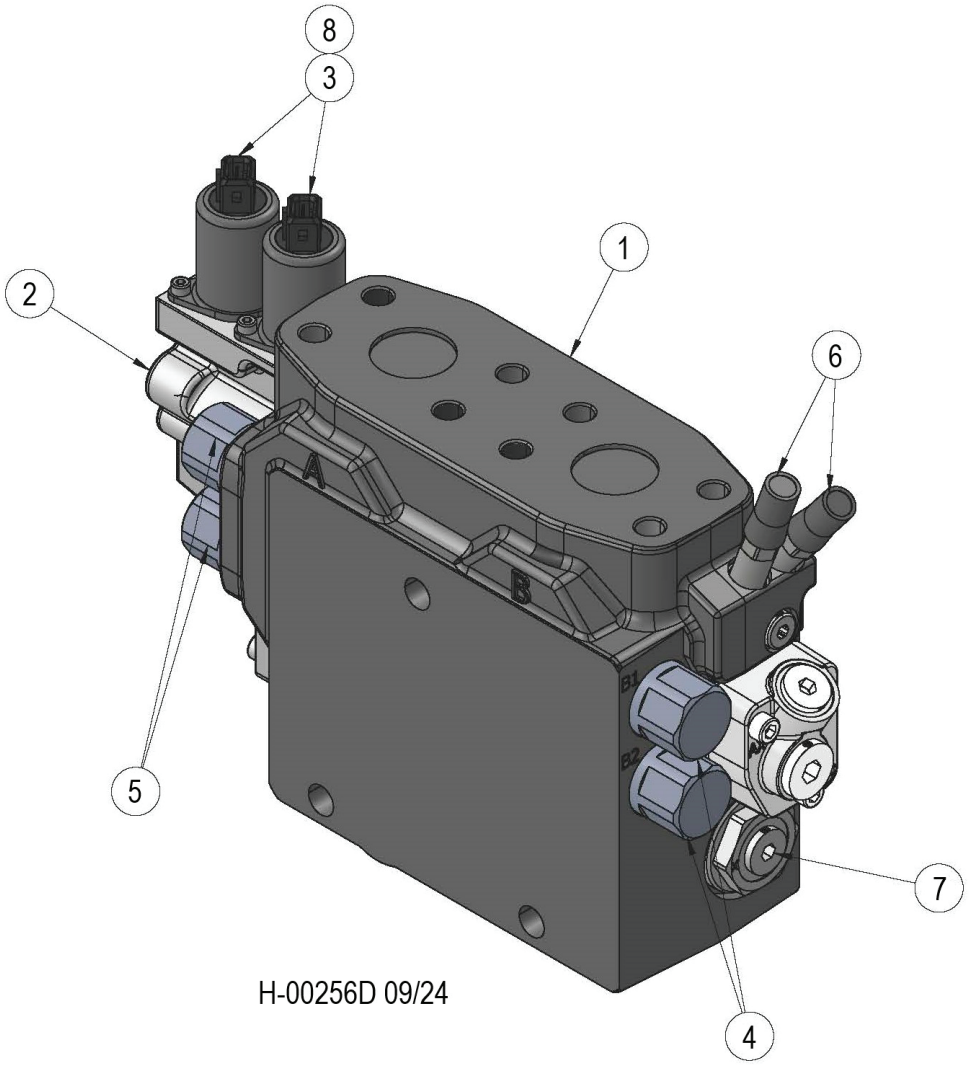


H-00256D 09/24

| Item | Part # | Description | Qty. |
|---|---|---|---|
| 1 | 20108690 | VA450 BUILD PROGRAM WORK SECTION | 1 |
| 2 | 20099915 | KIT EC-CAP COMPLETE U VA450/VA300 ENDCAP W/O STROKE LIMITER | 1 |
| 3 | 699190 | 24 VDC SOLENOID AMP W ORIFICE 0.8 MM | 2 |
| 4 | 19217273 | 300 BAR PORT RELIEF VALVE 9120029917 | 2 |
| 5 | 56472 | 330 BAR PORT RELIEF VALVE | 2 |
| 6 | 699170 | SUPPLY REDUCER MR (K220/L90) W/O TAMPERPROOF CAP | 2 |
| 7 | 55734 | VA450 A AND B SIDE EK COMPENSATOR KIT 6764825 | 1 |
| 8 | 699180 | 1.00MM PILOT ORIFICE 376269610 | 2 |
| * | 20099960 | SPOOL 4AC VA450 HEEL/TOOL TILT SPOOL | 1 |
| * | 699200 | KIT SPRING PACK 6.5-19 BAR STD VA450 6764840 | 1 |
| * | 20107604 | KIT B-SIDE COVER, U/U VA450/VA300 CAP B W/ #8 SAE PLUG | 1 |

*** MEANS NOT SHOWN)**

# H200-00123 - W450 MAIN VALVE SECTION - STICK BOOM - (DISC SAW )

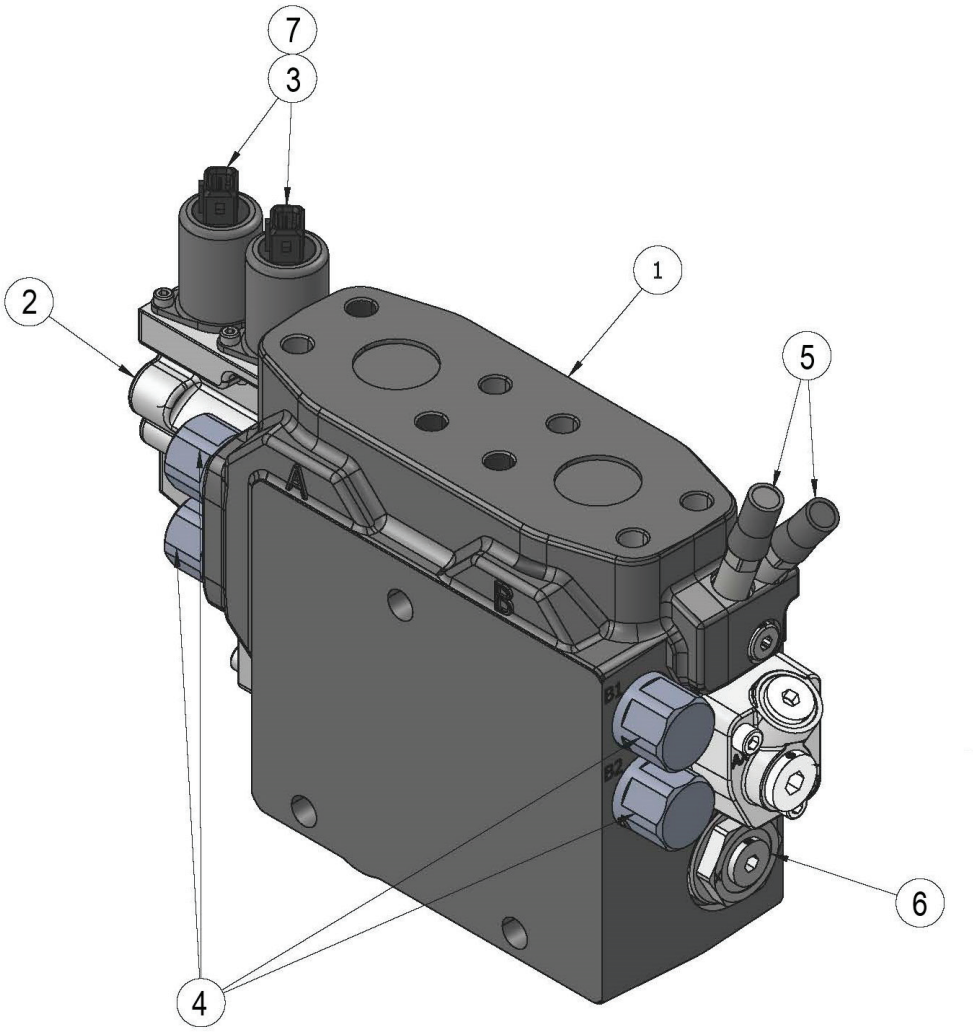


H-00257D 09/24

| Item | Part # | Description | Qty. |
|---|---|---|---|
| 1 | 20108694 | VA450 BUILD PROGRAM WORK SECTION | 1 |
| 2 | 20099915 | KIT EC-CAP COMPLETE U VA450/VA300 ENDCAP W/O STROKE LIMITER | 1 |
| 3 | 699190 | 24 VDC SOLENOID AMP W ORIFICE 0.8 MM | 2 |
| 4 | 56161 | 320 BAR PORT RELIEF VALVE 6760610 | 4 |
| 5 | 699170 | SUPPLY REDUCER MR (K220/L90) W/O TAMPERPROOF CAP | 2 |
| 6 | 55734 | VA450 A AND B SIDE EK COMPENSATOR KIT 6764825 | 1 |
| 7 | 699180 | 1.00MM PILOT ORIFICE 376269610 | 2 |
| * | 20099958 | VA450 STICK 4AA SPOOL | 1 |
| * | 699200 | KIT SPRING PACK 6.5-19 BAR STD VA450 6764840 | 1 |
| * | 20107604 | KIT B-SIDE COVER, U/U VA450/VA300 CAP B W/ #8 SAE PLUG | 1 |

*** MEANS NOT SHOWN)**

# H200-00124 - W450 MAIN VALVE SECTION - MAIN BOOM - (DISC SAW )

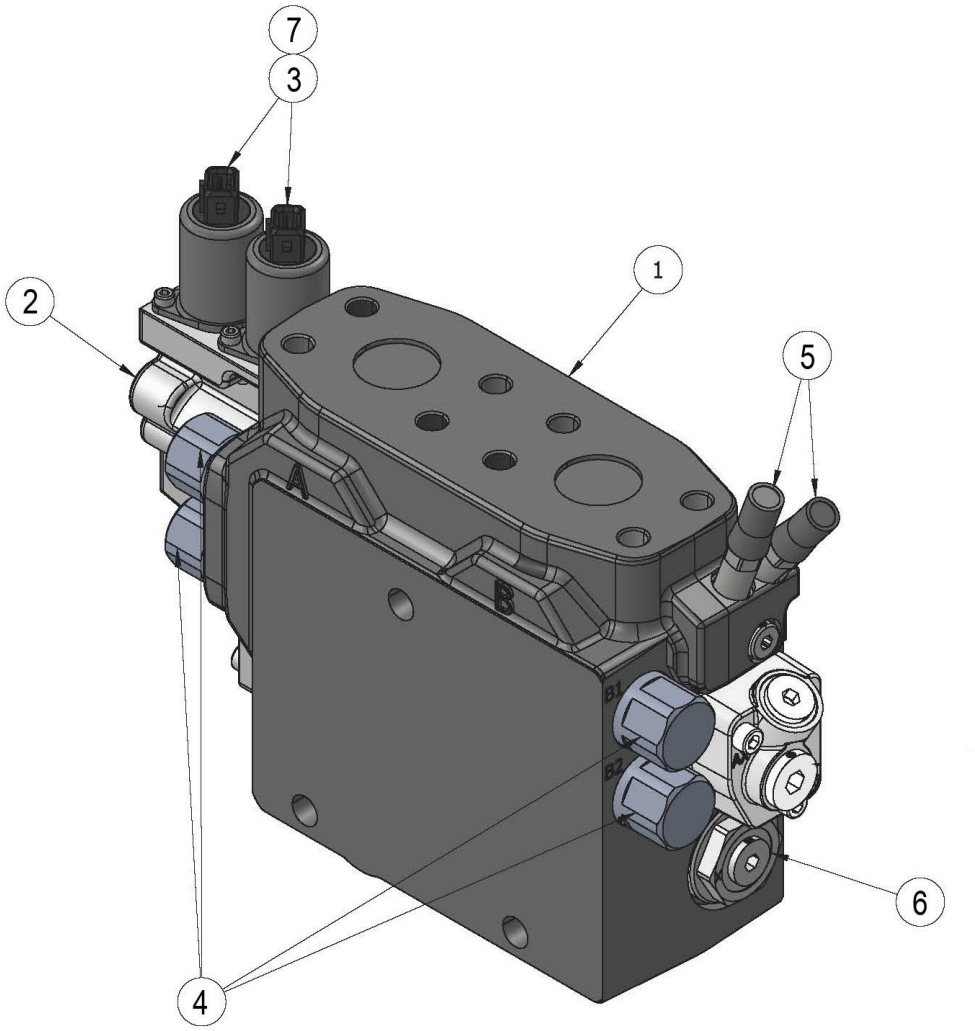


H-00257D 09/24

| Item | Part # | Description | Qty. |
|---|---|---|---|
| 1 | 20108696 | VA450 BUILD PROGRAM WORK SECTION | 1 |
| 2 | 20099915 | KIT EC-CAP COMPLETE U VA450/VA300 ENDCAP W/O STROKE LIMITER | 1 |
| 3 | 699190 | 24 VDC SOLENOID AMP W ORIFICE 0.8 MM | 2 |
| 4 | 56161 | 320 BAR PORT RELIEF VALVE 6760610 | 4 |
| 5 | 699170 | SUPPLY REDUCER MR (K220/L90) W/O TAMPERPROOF CAP | 2 |
| 6 | 55734 | VA450 A AND B SIDE EK COMPENSATOR KIT 6764825 | 1 |
| 7 | 699180 | 1.00MM PILOT ORIFICE 376269610 | 2 |
| * | 57318 | VA450 MAIN BOOM 4AB SPOOL | 1 |
| * | 699200 | KIT SPRING PACK 6.5-19 BAR STD VA450 6764840 | 1 |
| * | 20107604 | KIT B-SIDE COVER, U/U VA450/VA300 CAP B W/ #8 SAE PLUG | 1 |

*** MEANS NOT SHOWN)**

# H200-00125 - WS300 MAIN VALVE SECTION - ACCUMULATOR - (DISC SAW )

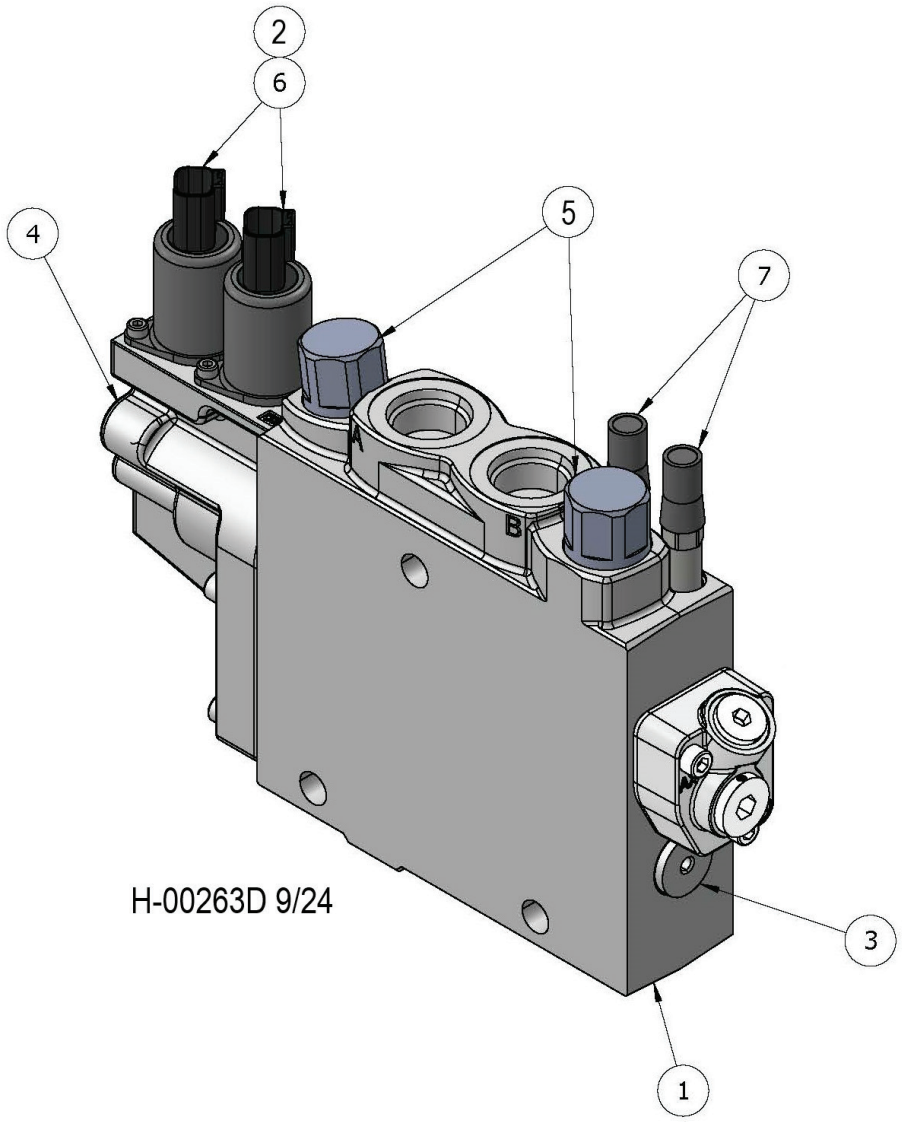


| Item | Part # | Description | Qty. |
|---|---|---|---|
| 1 | 20108703 | VA300 BUILD PROGRAM WORK SECTION | 1 |
| 2 | 699180 | 1.00MM PILOT ORIFICE 376269610 | 2 |
| 3 | 20106632 | K1 COMP KIT VA300 | 1 |
| 4 | 20099915 | KIT EC-CAP COMPLETE U VA450/VA300 ENDCAP W/O STROKE LIMITER | 1 |
| 5 | 19217273 | 300 BAR PORT RELIEF VALVE 9120029917 | 2 |
| 6 | 696080 | 24VDC SOLENOID PILOT DEUSTCH W ORIFICE 0.8 MM | 2 |
| 7 | 699170 | SUPPLY REDUCER MR (K220/L90) W/O TAMPERPROOF CAP | 2 |
| * | 53387 | SPOOL, VA300, 3AR | 1 |
| * | 20107604 | KIT B-SIDE COVER, U/U VA450/VA300 CAP B W/ #8 SAE PLUG | 1 |
| * | 20099909 | KIT SPRING PACK 6 5-19 BAR STD VA450/VA300 SPRING PACK | 1 |

*** MEANS NOT SHOWN)**

# H200-00126 - WS300 MAIN VALVE SECTION - ROTATE - (DISC SAW )

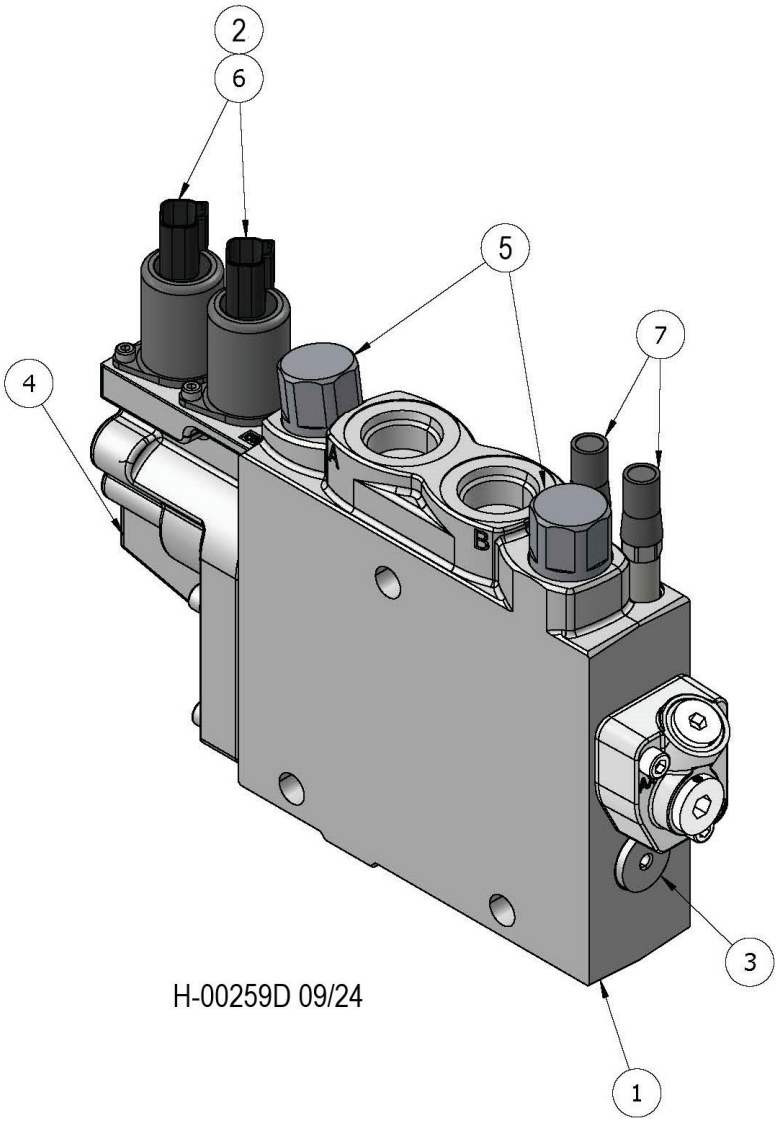


H-00259D 09/24

| Item | Part # | Description | Qty. |
|---|---|---|---|
| 1 | 20108704 | VA300 BUILD PROGRAM WORK SECTION | 1 |
| 2 | 699180 | 1.00MM PILOT ORIFICE 376269610 | 2 |
| 3 | 20106632 | K1 COMP KIT VA300 | 1 |
| 4 | 20099915 | KIT EC-CAP COMPLETE U VA450/VA300 ENDCAP W/O STROKE LIMITER | 1 |
| 5 | 19217272 | 280 BAR WP RELIEF 9120029916 | 2 |
| 6 | 696080 | 24VDC SOLENOID PILOT DEUSTCH W ORIFICE 0.8 MM | 2 |
| 7 | 699170 | SUPPLY REDUCER MR (K220/L90) W/O TAMPERPROOF CAP | 2 |
| * | 53387 | VA300 ROTATE 3AR SPOOL | 1 |
| * | 20107604 | KIT B-SIDE COVER, U/U VA450/VA300 CAP B W/ #8 SAE PLUG | 1 |
| * | 20099909 | KIT SPRING PACK 6 5-19 BAR STD VA450/VA300 SPRING PACK | 1 |

*** MEANS NOT SHOWN)**

# H200-00127 - WS300 MAIN VALVE SECTION - CLAMP - (DISC SAW )

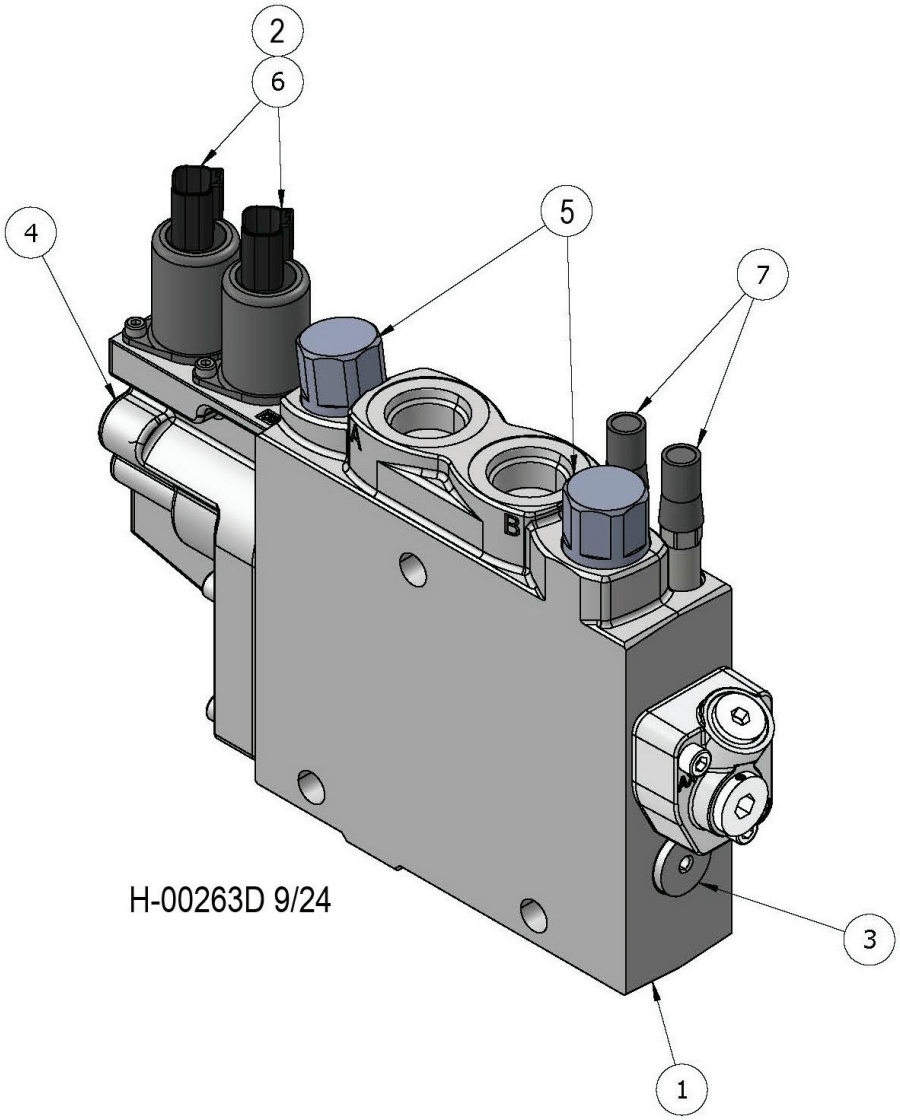


| Item | Part # | Description | Qty. |
|---|---|---|---|
| 1 | 20108703 | VA300 BUILD PROGRAM WORK SECTION | 1 |
| 2 | 699180 | 1.00MM PILOT ORIFICE 376269610 | 2 |
| 3 | 20106632 | K1 COMP KIT VA300 | 1 |
| 4 | 20099915 | KIT EC-CAP COMPLETE U VA450/VA300 ENDCAP W/O STROKE LIMITER | 1 |
| 5 | 19217273 | 300 BAR PORT RELIEF VALVE 9120029917 | 2 |
| 6 | 696080 | 24VDC SOLENOID PILOT DEUSTCH W ORIFICE 0.8 MM | 2 |
| 7 | 699170 | SUPPLY REDUCER MR (K220/L90) W/O TAMPERPROOF CAP | 2 |
| * | 53387 | VA300 ACCUM/CLAMP 3AR SPOOL | 1 |
| * | 20107604 | KIT B-SIDE COVER, U/U VA450/VA300 CAP B W/ #8 SAE PLUG | 1 |
| * | 20099909 | KIT SPRING PACK 6 5-19 BAR STD VA450/VA300 SPRING PACK | 1 |

*** MEANS NOT SHOWN)**

# H200-00128 - WS300 MAIN VALVE SECTION - CAB LEVEL - (DISC SAW )

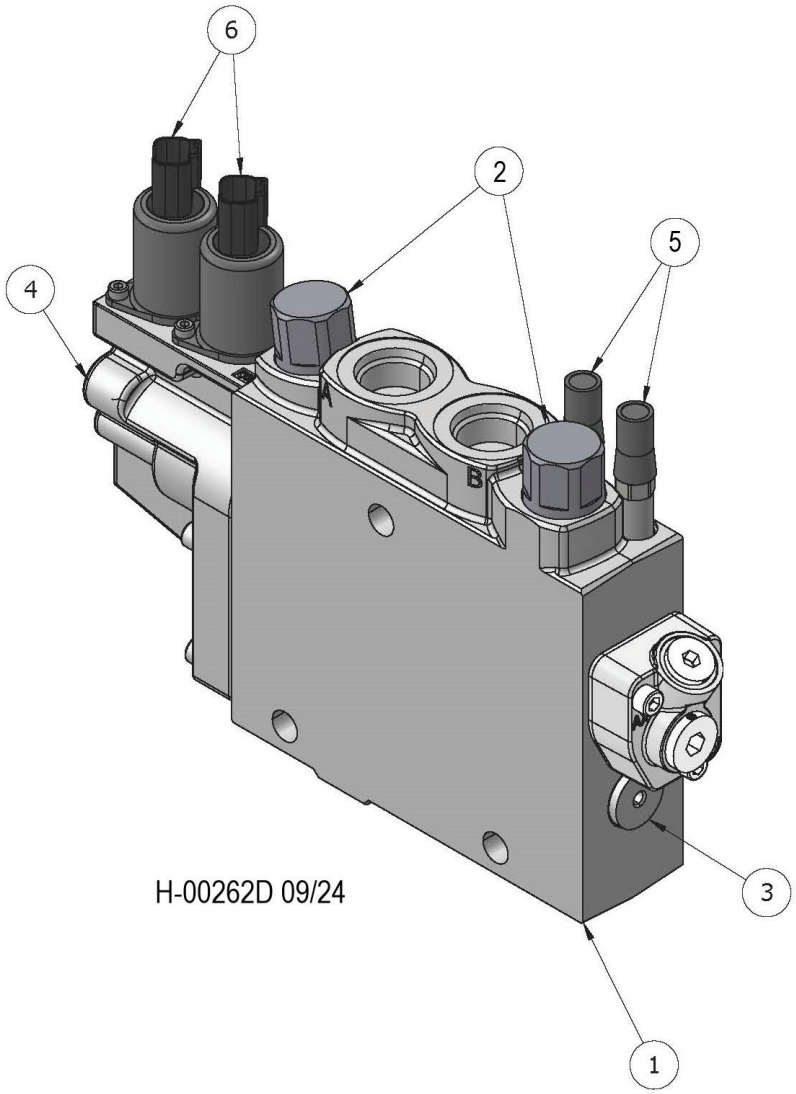


| Item | Part # | Description | Qty. |
|---|---|---|---|
| 1 | 20108705 | VA300 BUILD PROGRAM WORK SECTION | 1 |
| 2 | 19217272 | 280 BAR WP RELIEF 9120029916 | 2 |
| 3 | 20106632 | K1 COMP KIT VA300 | 1 |
| 4 | 20099915 | KIT EC-CAP COMPLETE U VA450/VA300 ENDCAP W/O STROKE LIMITER | 1 |
| 5 | 699170 | SUPPLY REDUCER MR (K220/L90) W/O TAMPERPROOF CAP | 2 |
| 6 | 696080 | 24VDC SOLENOID PILOT DEUSTCH W ORIFICE 0.8 MM | 2 |
| * | 20099965 | VA300 LEVEL 3AW SPOOL | 1 |
| * | 20099909 | KIT SPRING PACK 6 5-19 BAR STD VA450/VA300 SPRING PACK | 1 |
| * | 699180 | 1.00MM PILOT ORIFICE 376269610 | 2 |

*** MEANS NOT SHOWN)**

# H200-00129 - WS300 MAIN VALVE SECTION - OUTLET - (DISC SAW )

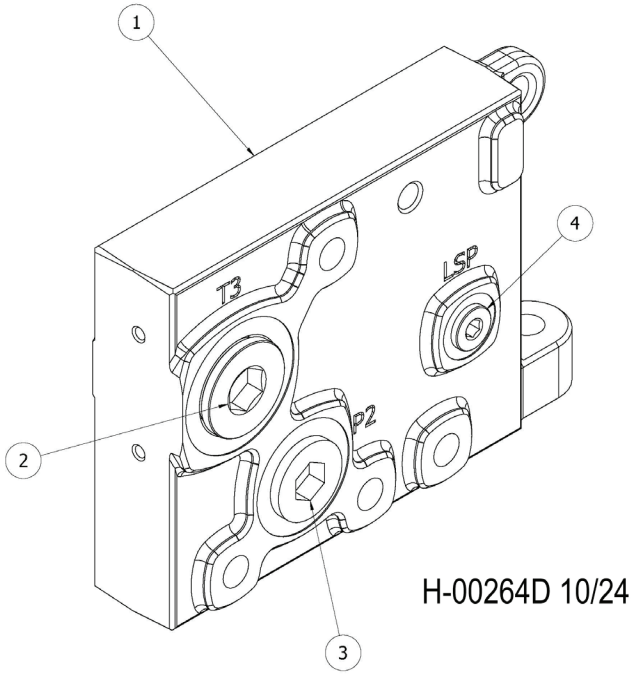


| Item | Part # | Description | Qty. |
|---|---|---|---|
| 1 | 20110351 | VA300/450 BUILD PROGRAM END SECTION | 1 |
| 2 | 19208810 | HOLLOW HEX PLUG SAE-ORB | 1 |
| 3 | 19207916 | HOLLOW HEX PLUG | 1 |
| 4 | 19215123 | PLUG #6 SAE HOLLOW HEX | 1 |

# H200-00130 - MAIN VALVE HYD. FITTINGS - DISC SAW/BAR SAW COMBO (LEVELING) (W450/W300 VALVE)

**NOTE: HYDRAULIC FITTINGS GET 545 LOCTITE™**

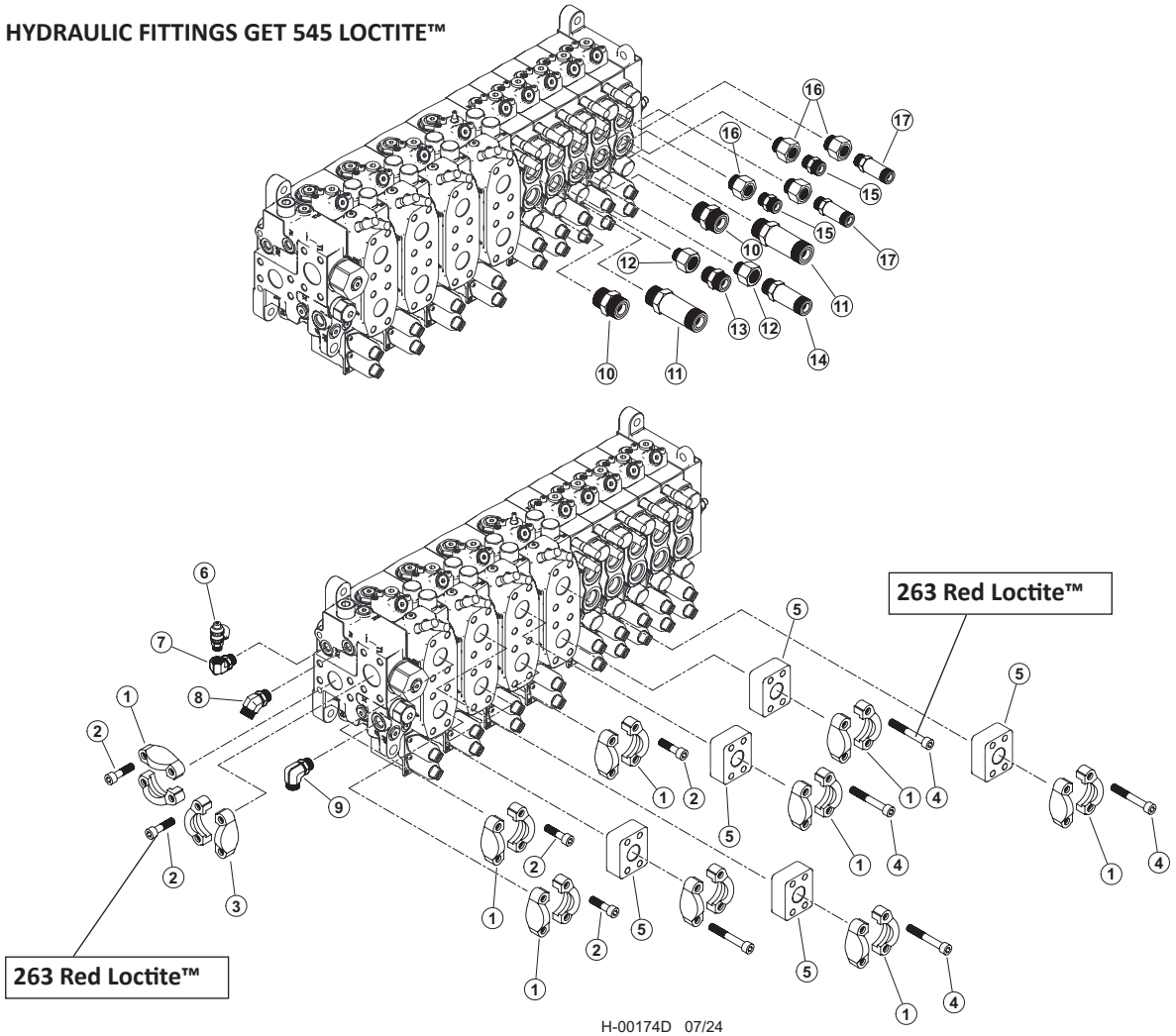


H-00174D 07/24

| Item | Part # | Description | Qty. |
|---|---|---|---|
| | 53308 | VALVE, VA450 - DISC SAW/BAR SAW COMBO (LEVELING) | 1 |
| | 65975 | KIT, HYD FITTING KIT, 450, DISCSAW BASIC | 1 |
| | 65613 | KIT, FITTING DISC LEVEL 450V D-SERIES | 1 |
| 1 | 65457 | 20SFXO & M12 SPLIT FLANGE (CODE 62) | 9 |
| 2 | 18988 | BOLT, ALLEN HEAD - 12MM-1.75P X 45MM **263 RED LOCTITE™** | 20 |
| 3 | 15186 | KIT, SPLIT FLANGE - 1.5" (CODE 61) | 1 |
| 4 | 59135 | BOLT, SHC, 12.9 - M12-1.75P X 80mm **263 RED LOCTITE™** | 20 |
| 5 | 65458 | ANCHOR-ASX-20GP STANDOFF | 5 |
| 6 | 57820 | TAP, GAUGE PORT # 6 SAE - Oring Boss | 1 |
| 7 | 58348 | FITTING, ELBOW 6-AOEG5-5 | 1 |
| 8 | 23015 | ELBOW, 45 - 6 V5OLO-S | 1 |
| 9 | 16360 | ELBOW, 90 - FF1868T-0808S | 1 |
| 10 | 15152 | CONNECTOR, STR - FF1852T-1212S | 2 |
| 11 | 19092 | CONNECTOR, STR LONG - 848L-TTO-12X12 | 2 |
| 12 | 16358 | BUSHING, REDUCER - 6410-12-10 | 2 |
| 13 | 50039 | CONNECTOR, STR - 848-TTO-10X10 | 1 |
| 14 | 52554 | CONNECTOR, STR LONG - 10X10 | 1 |
| 15 | 15117 | CONNECTOR, STR - FF1852T-0808S | 2 |
| 16 | 20067 | BUSHING, REDUCER - 6410-12-8 | 4 |
| 17 | 19091 | CONNECTOR, STR LONG - 848L-TTO-08X08 | 2 |

# H200-00140 - MAIN VALVE HYD. FITTINGS - DISC SAW/BAR SAW COMBO (NON-LEVELING) (W450/W300 VALVE)

**NOTE: HYDRAULIC FITTINGS GET 545 LOCTITE™**

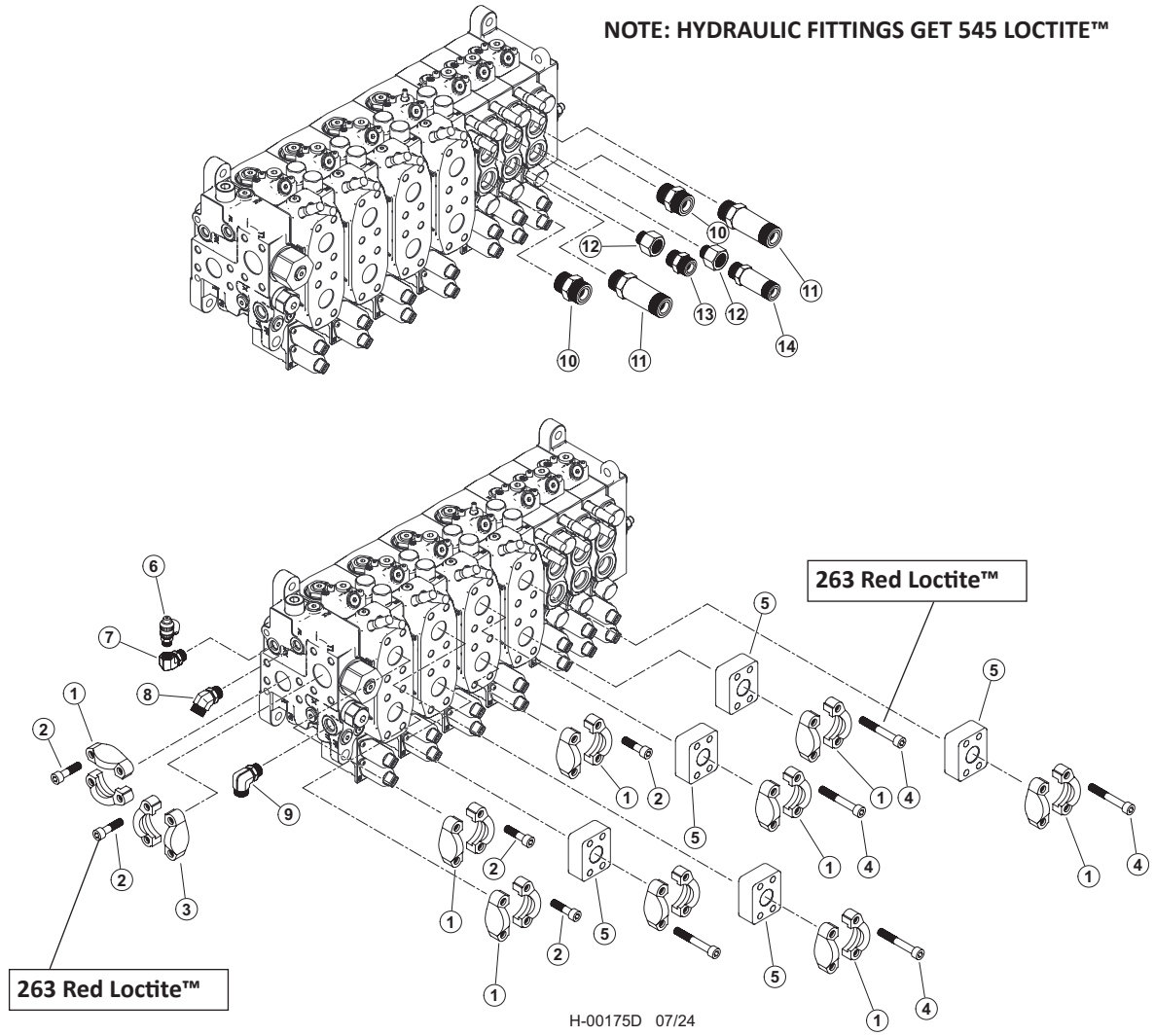


| Item | Part # | Description | Qty. |
|---|---|---|---|
| | 53334 | VALVE, VA450 - DISC SAW/BAR SAW COMBO (NON-LEVELING) | 1 |
| | 65975 | KIT, HYD FITTING KIT, 450, DISCSAW BASIC | 1 |
| 1 | 65457 | 20SFXO & M12 SPLIT FLANGE (CODE 62) | 9 |
| 2 | 18988 | BOLT, ALLEN HEAD - 12MM-1.75P X 45MM **263 RED LOCTITE™** | 20 |
| 3 | 15186 | KIT, SPLIT FLANGE - 1.5" (CODE 61) | 1 |
| 4 | 59135 | BOLT, SHC, 12.9 - M12-1.75P X 80mm **263 RED LOCTITE™** | 20 |
| 5 | 65458 | ANCHOR-ASX-20GP STANDOFF | 5 |
| 6 | 57820 | TAP, GAUGE PORT # 6 SAE - Oring Boss | 1 |
| 7 | 58348 | FITTING, ELBOW 6-AOEG5-5 | 1 |
| 8 | 23015 | ELBOW, 45 - 6 V5OLO-S | 1 |
| 9 | 16360 | ELBOW, 90 - FF1868T-0808S | 1 |
| 10 | 15152 | CONNECTOR, STR - FF1852T-1212S | 2 |
| 11 | 19092 | CONNECTOR, STR LONG - 848L-TTO-12X12 | 2 |
| 12 | 16358 | BUSHING, REDUCER - 6410-12-10 | 2 |
| 13 | 50039 | CONNECTOR, STR - 848-TTO-10X10 | 1 |
| 14 | 52554 | CONNECTOR, STR LONG - 10X10 | 1 |

# H200-00141 - W450 MAIN VALVE SECTION - INLET - (DISC SAW / BAR SAW COMBO)

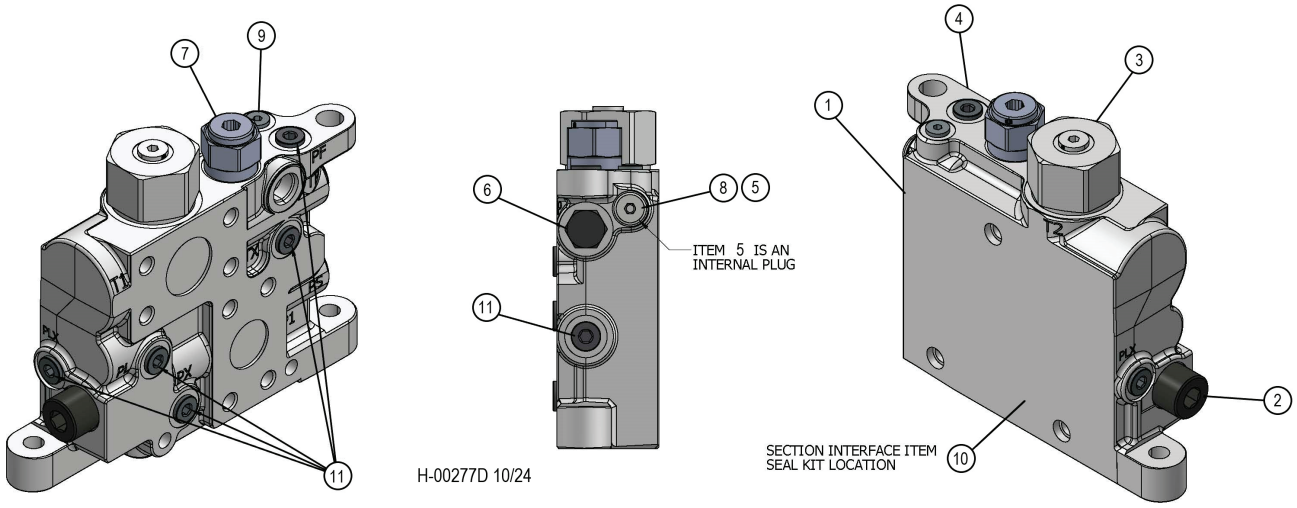


| Item | Part # | Description | Qty. |
|---|---|---|---|
| 1 | 20106626 | VA450 INLET | 1 |
| 2 | 19217256 | PLC182-330-20 RELIEF MAIN R/V 330 BAR 4785 PSI | 1 |
| 3 | 20106606 | MF5 COUNTER PRESSURE VALVE 6764842 | 1 |
| 4 | 20110560 | VA450 BLANK INLET SECTION LSB450 | 1 |
| 5 | 20110554 | TP INTERNAL PLUG | 1 |
| 6 | 19220867 | CHECK CART C08-2 STD 3PSI | 1 |
| 7 | 20090649 | VA300/450 REDUCING VALVE R35 | 1 |
| 8 | 20110562 | PLUG 14MM X 1.5 METRIC | 1 |
| 9 | 19213753 | HOLLOW HEX PLUG SAE-ORB | 1 |
| 10 | 54880 | SEAL KIT VA300 & VA450 INTERSECT | 1 |
| 11 | 19215123 | PLUG #6 SAE HOLLOW HEX | 6 |

# H200-00142 - W450 MAIN VALVE SECTION - TOOL TILT - (DISC SAW / BAR SAW COMBO)

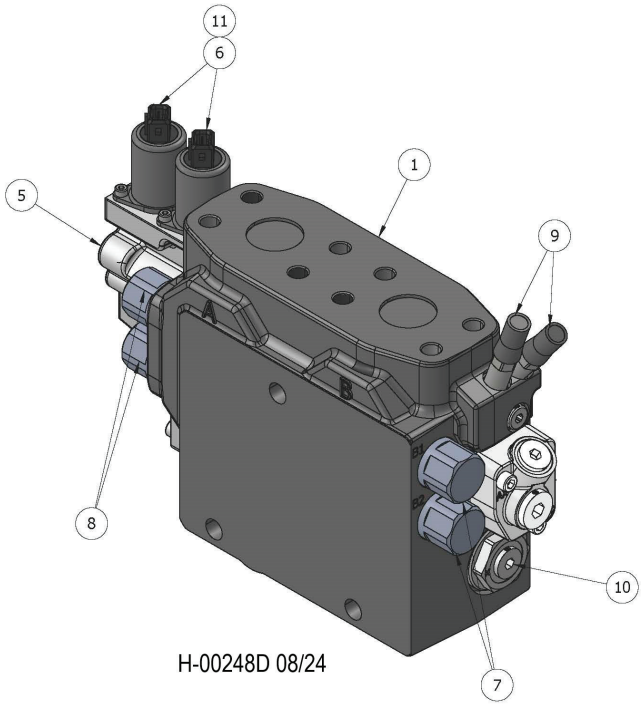

H-00248D 08/24

| Item | Part # | Description | Qty. |
|---|---|---|---|
| 1 | 20108690 | VA450 BUILD PROGRAM WORK SECTION | 1 |
| 2 | 20099915 | KIT EC-CAP COMPLETE U VA450/VA300 ENDCAP W/O STROKE LIMITER | 1 |
| 3 | 699190 | 24 VDC SOLENOID AMP W ORIFICE 0.8 MM | 2 |
| 4 | 19217273 | 300 BAR PORT RELIEF VALVE 9120029917 | 2 |
| 5 | 56472 | 330 BAR PORT RELIEF VALVE | 2 |
| 6 | 699170 | SUPPLY REDUCER MR (K220/L90) W/O TAMPERPROOF CAP | 2 |
| 7 | 55734 | VA450 A AND B SIDE EK COMPENSATOR KIT 6764825 | 1 |
| 8 | 699180 | 1.00MM PILOT ORIFICE 376269610 | 2 |
| * | 20099960 | SPOOL 4AC VA450 HEEL/TOOL TILT SPOOL | 1 |
| * | 699200 | KIT SPRING PACK 6.5-19 BAR STD VA450 6764840 | 1 |
| * | 20107604 | KIT B-SIDE COVER, U/U VA450/VA300 CAP B W/ #8 SAE PLUG | 1 |

*** MEANS NOT SHOWN)**

# H200-00143 - W450 MAIN VALVE SECTION - STICK BOOM (DISC SAW / BAR SAW COMBO)

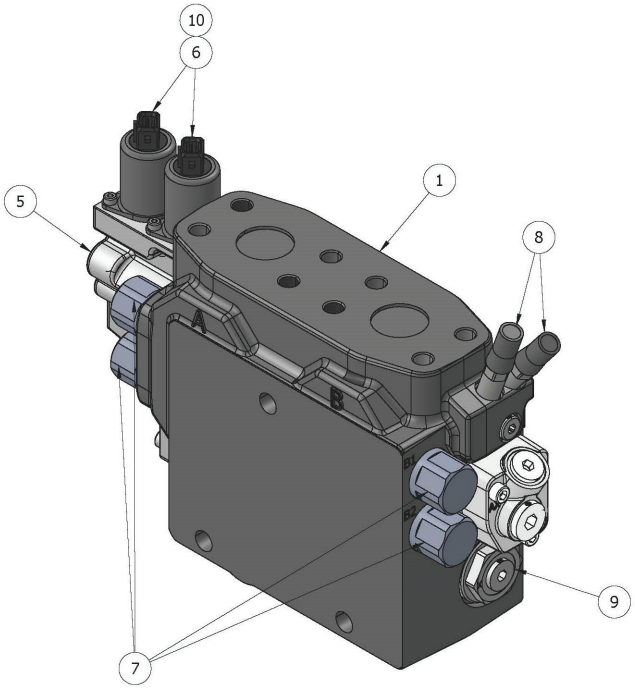


H-00249D 08/24

| Item | Part # | Description | Qty. |
|---|---|---|---|
| 1 | 20108694 | VA450 BUILD PROGRAM WORK SECTION | 1 |
| 2 | 20099915 | KIT EC-CAP COMPLETE U VA450/VA300 ENDCAP W/O STROKE LIMITER | 1 |
| 3 | 699190 | 24 VDC SOLENOID AMP W ORIFICE 0.8 MM | 2 |
| 4 | 56161 | 320 BAR PORT RELIEF VALVE 6760610 | 4 |
| 5 | 699170 | SUPPLY REDUCER MR (K220/L90) W/O TAMPERPROOF CAP | 2 |
| 6 | 55734 | VA450 A AND B SIDE EK COMPENSATOR KIT 6764825 | 1 |
| 7 | 699180 | 1.00MM PILOT ORIFICE 376269610 | 2 |
| * | 20099958 | VA450 STICK 4AA SPOOL | 1 |
| * | 69920 | KIT SPRING PACK 6.5-19 BAR STD VA450 6764840 | 1 |
| * | 20107604 | KIT B-SIDE COVER, U/U VA450/VA300 CAP B W/ #8 SAE PLUG | 1 |

*** MEANS NOT SHOWN)**

# H200-00144 - W450 MAIN VALVE SECTION - MAIN BOOM (DISC SAW / BAR SAW COMBO)

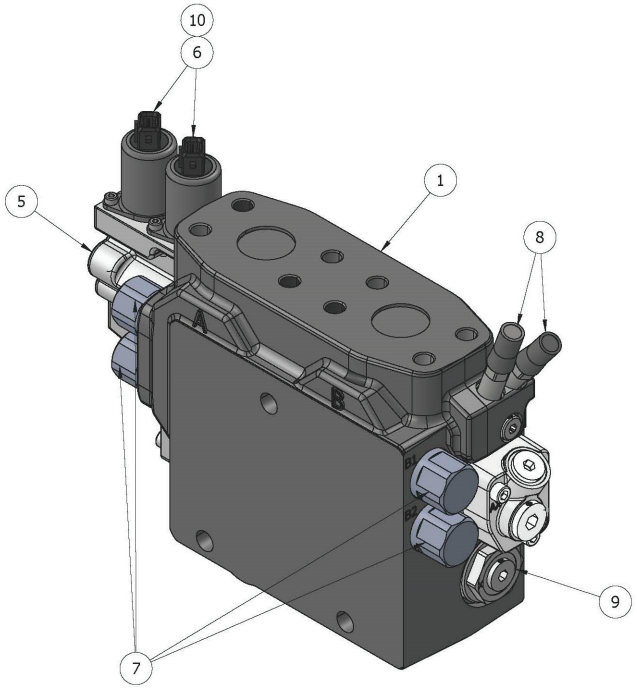


H-00249D 08/24

| Item | Part # | Description | Qty. |
|---|---|---|---|
| 1 | 20108696 | VA450 BUILD PROGRAM WORK SECTION | 1 |
| 2 | 20099915 | KIT EC-CAP COMPLETE U VA450/VA300 ENDCAP W/O STROKE LIMITER | 1 |
| 3 | 699190 | 24 VDC SOLENOID AMP W ORIFICE 0.8 MM | 2 |
| 4 | 56161 | 320 BAR PORT RELIEF VALVE 6760610 | 4 |
| 5 | 699170 | SUPPLY REDUCER MR (K220/L90) W/O TAMPERPROOF CAP | 2 |
| 6 | 55734 | VA450 A AND B SIDE EK COMPENSATOR KIT 6764825 | 1 |
| 7 | 699180 | 1.00MM PILOT ORIFICE 376269610 | 2 |
| * | 57318 | VA450 MAIN BOOM 4AB SPOOL | 1 |
| * | 699200 | KIT SPRING PACK 6.5-19 BAR STD VA450 6764840 | 1 |
| * | 20107604 | KIT B-SIDE COVER, U/U VA450/VA300 CAP B W/ #8 SAE PLUG | 1 |

*** MEANS NOT SHOWN)**

# H200-00145 - W450 MAIN VALVE SECTION - SAW - (DISC SAW / BAR SAW COMBO)

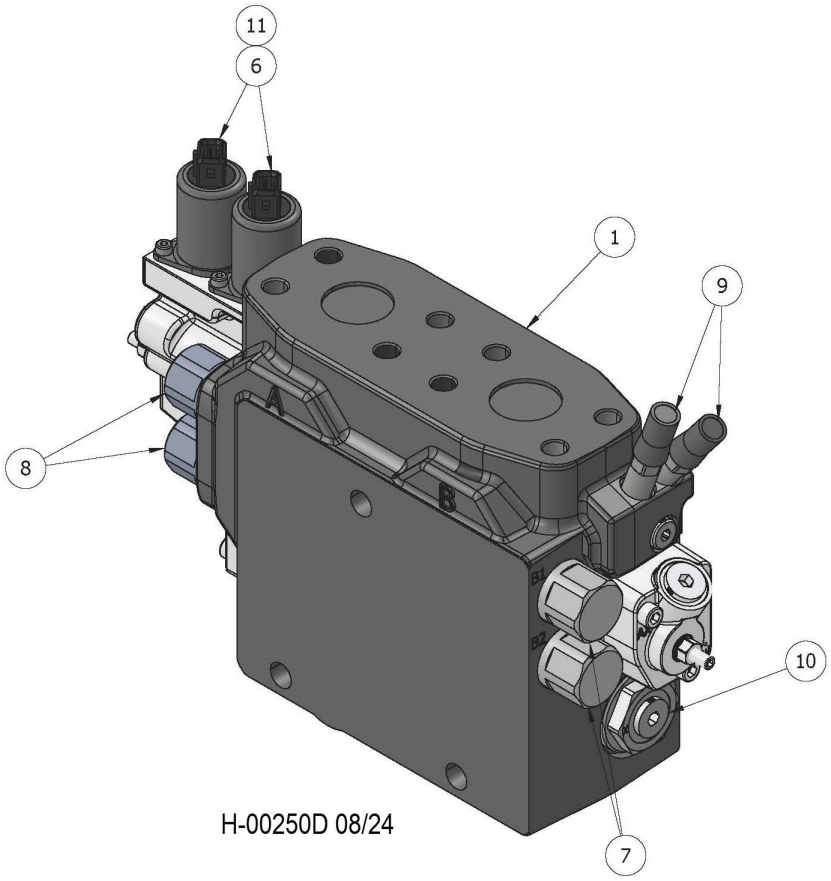


| Item | Part # | Description | Qty. |
|---|---|---|---|
| 1 | 20108702 | VA450 BUILD PROGRAM WORK SECTION | 1 |
| * | 20099963 | SPOOL 4AE VA450 SAW SPOOL | 1 |
| * | 699200 | KIT SPRING PACK 6.5-19 BAR STD VA450 6764840 | 1 |
| * | 53385 | KIT B-SIDE COVER U/M6 VA450/VA300 W/ STROKE LIMITER | 1 |
| * | 20099916 | KIT EC-CAP COMPLETE U/M6 VA450/VA300 END CAP A W/ STROKE LIMITER | 1 |
| 6 | 699190 | 24 VDC SOLENOID AMP W ORIFICE 0.8 MM | 2 |
| 7 | 56473 | PLC185-380-20 A014 KSERI 6760874 | 2 |
| 8 | 56472 | 330 BAR PORT RELIEF VALVE | 2 |
| 9 | 699170 | SUPPLY REDUCER MR (K220/L90) W/O TAMPERPROOF CAP | 2 |
| 10 | 55734 | VA450 A AND B SIDE EK COMPENSATOR KIT 6764825 | 1 |
| 11 | 699180 | 1.00MM PILOT ORIFICE 376269610 | 2 |

***MEANS NOT SHOWN**

# H200-00146 - WS300 MAIN VALVE SECTION - ACCUMULATOR (DISC SAW / BAR SAW COMBO)

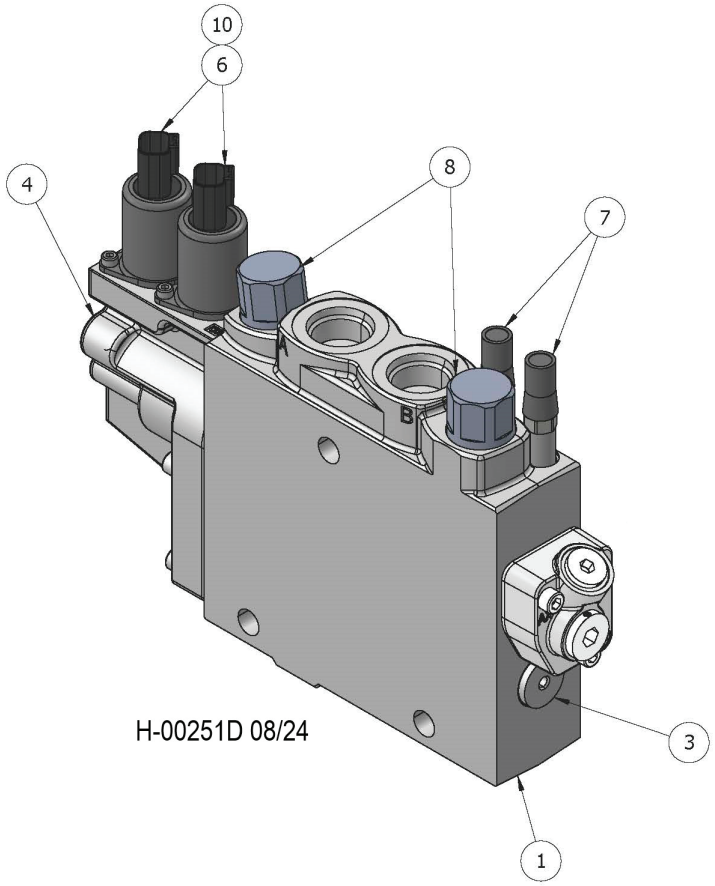


| Item | Part # | Description | Qty. |
|---|---|---|---|
| 1 | 20108703 | VA300 BUILD PROGRAM WORK SECTION | 1 |
| 2 | 699180 | 1.00MM PILOT ORIFICE 376269610 | 2 |
| 3 | 20106632 | K1 COMP KIT VA300 | 1 |
| 4 | 20099915 | KIT EC-CAP COMPLETE U VA450/VA300 ENDCAP W/O STROKE LIMITER | 1 |
| 5 | 19217273 | 300 BAR PORT RELIEF VALVE 9120029917 | 2 |
| 6 | 696080 | 24VDC SOLENOID PILOT DEUSTCH W ORIFICE 0.8 MM | 2 |
| 7 | 699170 | SUPPLY REDUCER MR (K220/L90) W/O TAMPERPROOF CAP | 2 |
| * | 53387 | SPOOL, VA300, 3AR | 1 |
| * | 20107604 | KIT B-SIDE COVER, U/U VA450/VA300 CAP B W/ #8 SAE PLUG | 1 |
| * | 20099909 | KIT SPRING PACK 6 5-19 BAR STD VA450/VA300 SPRING PACK | 1 |

*** MEANS NOT SHOWN)**

# H200-00147 - WS300 MAIN VALVE SECTION - ROTATE - (DISC SAW / BAR SAW COMBO)

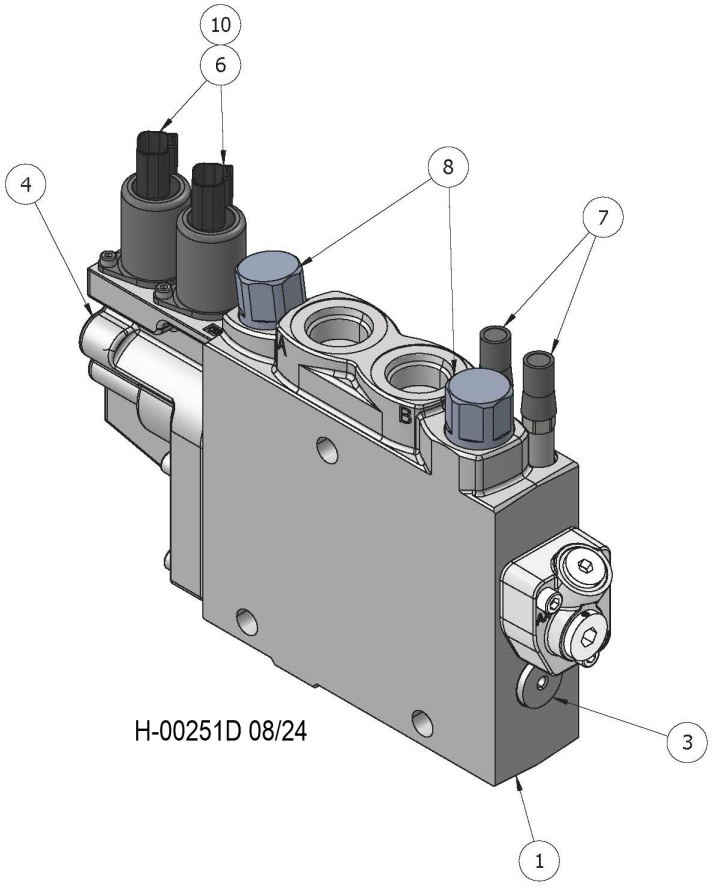


| Item | Part # | Description | Qty. |
|---|---|---|---|
| 1 | 20108704 | VA300 BUILD PROGRAM WORK SECTION | 1 |
| 2 | 699180 | 1.00MM PILOT ORIFICE 376269610 | 2 |
| 3 | 20106632 | K1 COMP KIT VA300 | 1 |
| 4 | 20099915 | KIT EC-CAP COMPLETE U VA450/VA300 ENDCAP W/O STROKE LIMITER | 1 |
| 5 | 19217272 | 280 BAR WP RELIEF 9120029916 | 2 |
| 6 | 696080 | 24VDC SOLENOID PILOT DEUSTCH W ORIFICE 0.8 MM | 2 |
| 7 | 699170 | SUPPLY REDUCER MR (K220/L90) W/O TAMPERPROOF CAP | 2 |
| * | 53387 | SPOOL, VA300, 3AR | 1 |
| * | 20107604 | KIT B-SIDE COVER, U/U VA450/VA300 CAP B W/ #8 SAE PLUG | 1 |
| * | 20099909 | KIT SPRING PACK 6 5-19 BAR STD VA450/VA300 SPRING PACK | 1 |

*** MEANS NOT SHOWN)**

# H200-00148 - WS300 MAIN VALVE SECTION - CLAMP - (DISC SAW / BAR SAW COMBO)

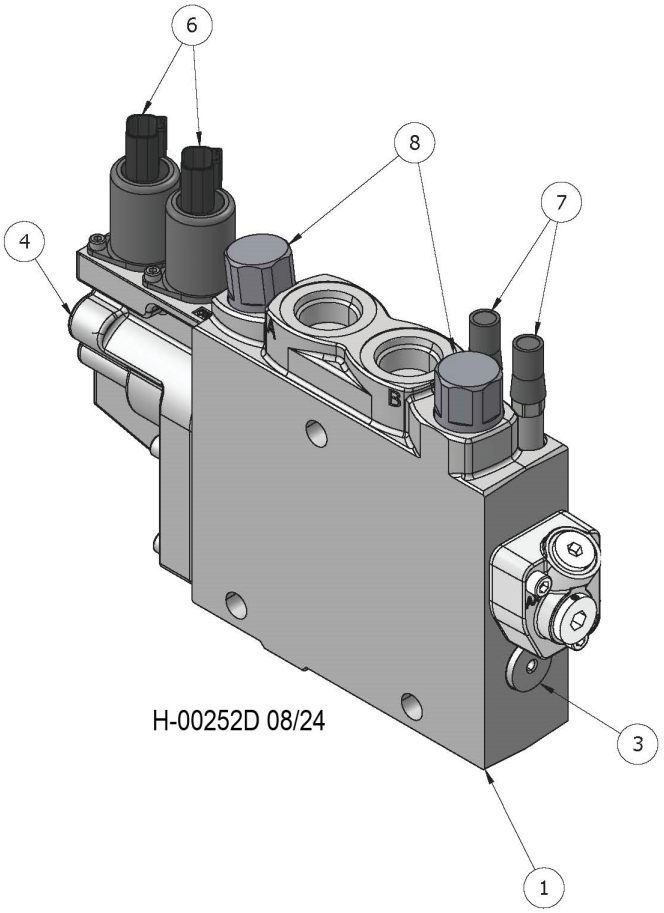


| Item | Part # | Description | Qty. |
|---|---|---|---|
| 1 | 20108703 | VA300 BUILD PROGRAM WORK SECTION | 1 |
| 2 | 699180 | 1.00MM PILOT ORIFICE 376269610 | 2 |
| 3 | 20106632 | K1 COMP KIT VA300 | 1 |
| 4 | 20099915 | KIT EC-CAP COMPLETE U VA450/VA300 ENDCAP W/O STROKE LIMITER | 1 |
| 5 | 19217273 | 300 BAR PORT RELIEF VALVE 9120029917 | 2 |
| 6 | 696080 | 24VDC SOLENOID PILOT DEUSTCH W ORIFICE 0.8 MM | 2 |
| 7 | 699170 | SUPPLY REDUCER MR (K220/L90) W/O TAMPERPROOF CAP | 2 |
| * | 53387 | SPOOL, VA300, 3AR | 1 |
| * | 20107604 | KIT B-SIDE COVER, U/U VA450/VA300 CAP B W/ #8 SAE PLUG | 1 |
| * | 20099909 | KIT SPRING PACK 6 5-19 BAR STD VA450/VA300 SPRING PACK | 1 |

*** MEANS NOT SHOWN)**

# H200-00149 - WS300 MAIN VALVE SECTION - CAB LEVEL (DISC SAW / BAR SAW COMBO)

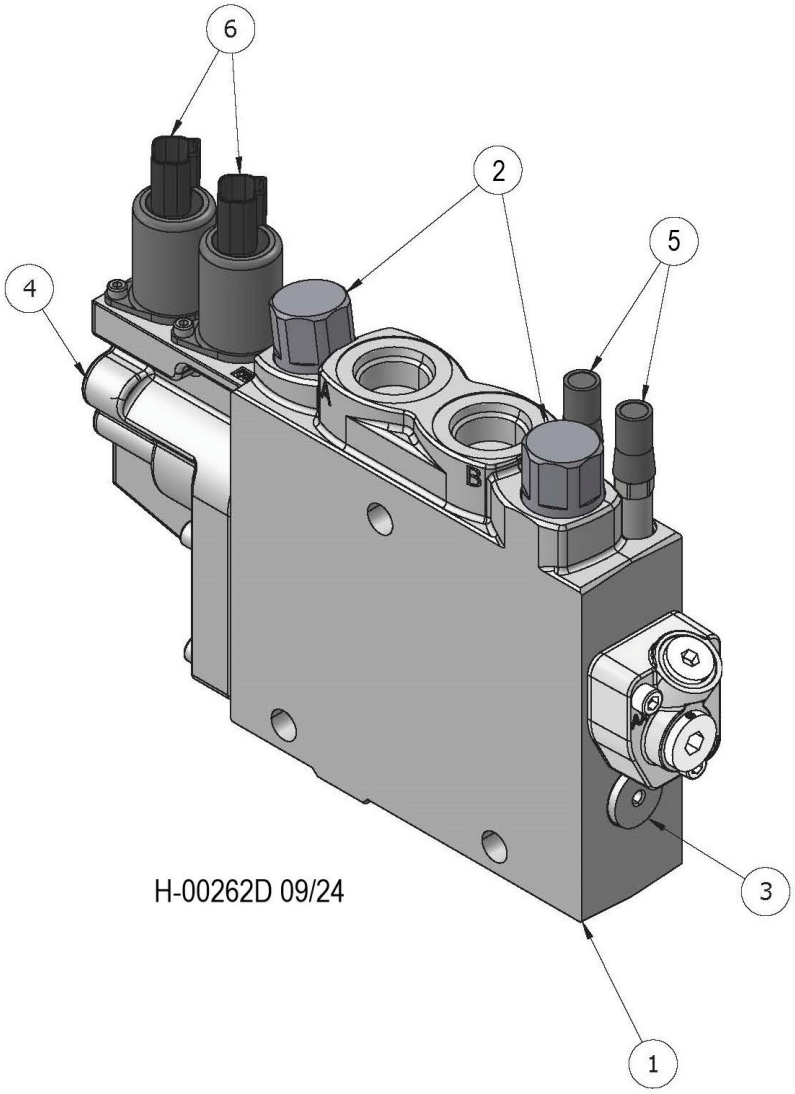


| Item | Part # | Description | Qty. |
|---|---|---|---|
| 1 | 20108705 | VA300 BUILD PROGRAM WORK SECTION | 1 |
| 2 | 19217272 | 280 BAR WP RELIEF 9120029916 | 2 |
| 3 | 20106632 | K1 COMP KIT VA300 | 1 |
| 4 | 20099915 | KIT EC-CAP COMPLETE U VA450/VA300 ENDCAP W/O STROKE LIMITER | 1 |
| 5 | 699170 | SUPPLY REDUCER MR (K220/L90) W/O TAMPERPROOF CAP | 2 |
| 6 | 696080 | 24VDC SOLENOID PILOT DEUSTCH W ORIFICE 0.8 MM | 2 |
| * | 20099965 | VA300 LEVEL 3AW SPOOL | 1 |
| * | 20099909 | KIT SPRING PACK 6 5-19 BAR STD VA450/VA300 SPRING PACK | 1 |
| * | 699180 | 1.00MM PILOT ORIFICE 376269610 | 2 |

*** MEANS NOT SHOWN)**

# H200-00150 - WS300 MAIN VALVE SECTION - OUTLET - (DISC SAW / BAR SAW COMBO)

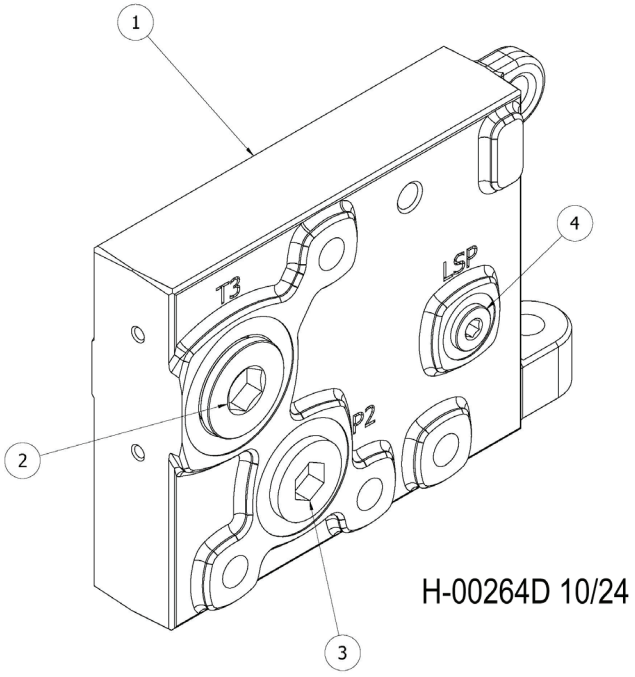


| Item | Part # | Description | Qty. |
|---|---|---|---|
| 1 | 20110351 | VA300/450 BUILD PROGRAM END SECTION | 1 |
| 2 | 19208810 | HOLLOW HEX PLUG SAE-ORB | 1 |
| 3 | 19207916 | HOLLOW HEX PLUG | 1 |
| 4 | 19215123 | PLUG #6 SAE HOLLOW HEX | 1 |

# H200-00160 - BOOM PLATE HYD. FITTINGS - DISC SAW & PROCESSOR ATTACHMENTS (W450/W300 VALVE)

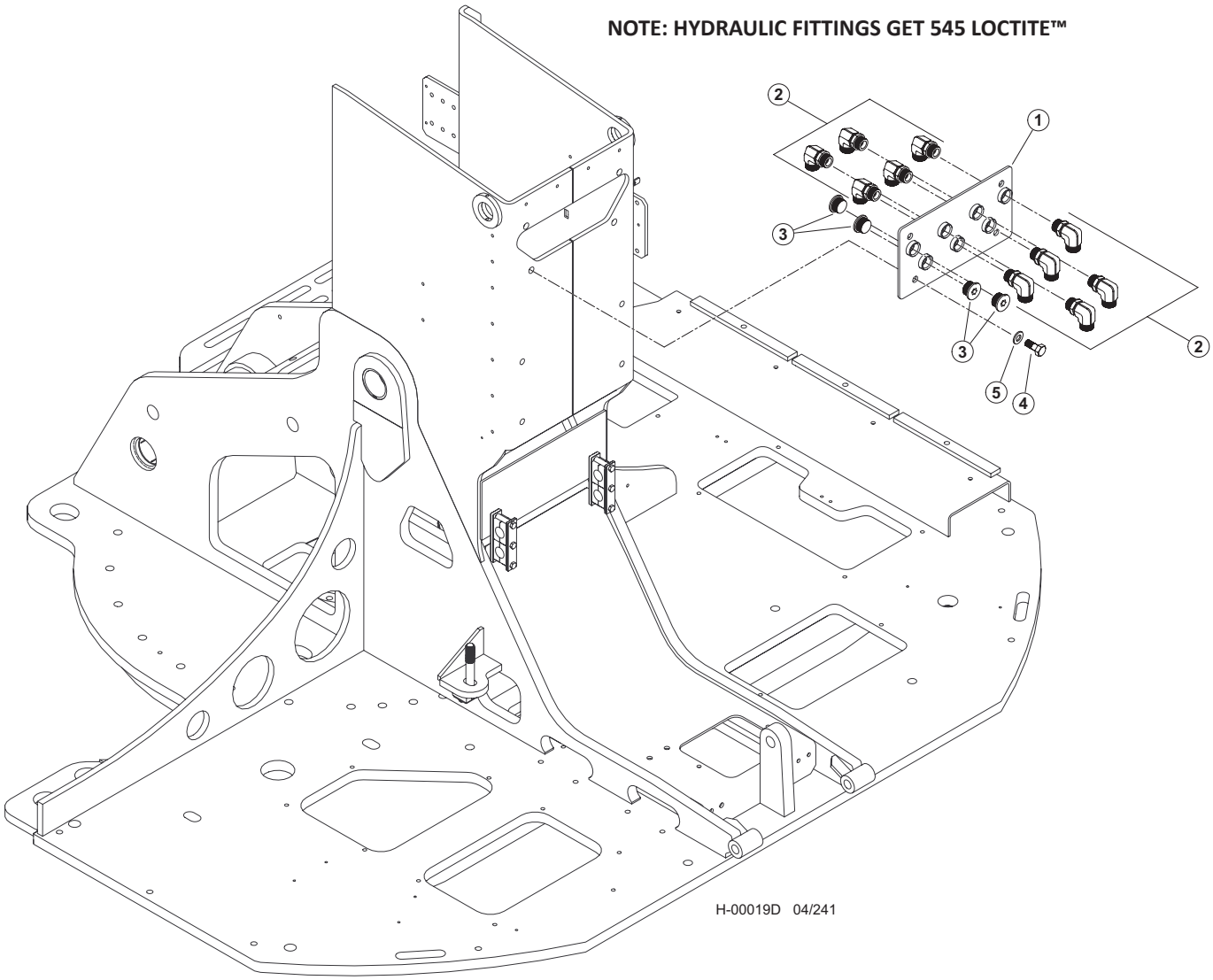


| Item | Part # | Description | Qty. |
|---|---|---|---|
| | 65882 | KIT, HYD FITTING, BH, DISCSAW BASIC | 1 |
| 1 | 60278 | WELDMENT, BUNCHER BOOM BH PLATE | 1 |
| 2 | 15528 | ELBOW, 90 - FF1868T-1616S | 10 |
| 3 | 19847 | PLUG - 6408-HHP-16 | 4 |
| 4 | 10739 | BOLT - .5” X 1.5” | 4 |
| 5 | 10804 | WASHER, FLAT - .5” | 4 |

# H200-00170 - MAIN VALVE HYD. FITTINGS - CONTROL FALL PROCESSOR (LEVELING) (W450/W300 VALVE)

**NOTE: HYDRAULIC FITTINGS GET 545 LOCTITE™**

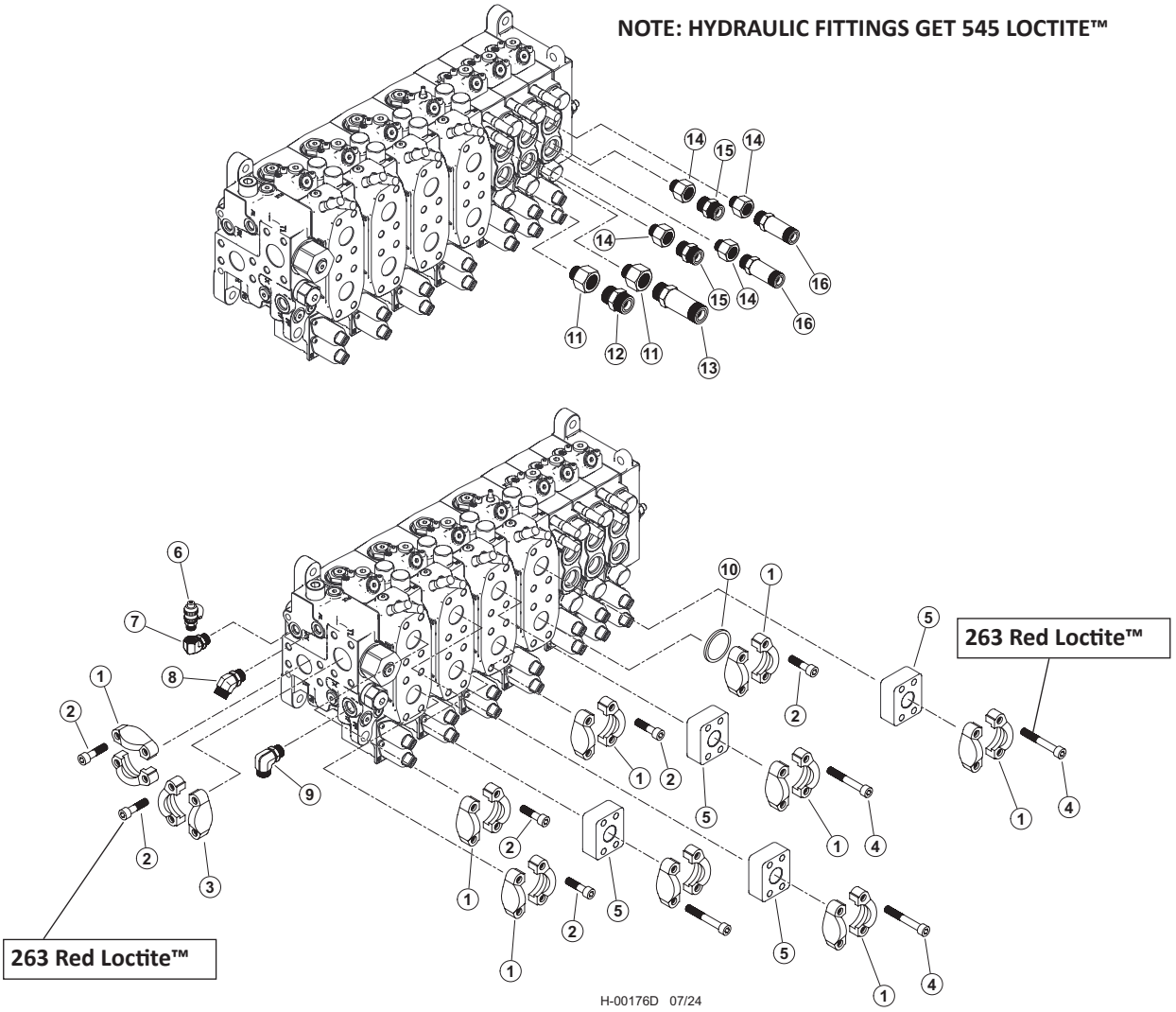


| Item | Part # | Description | Qty. |
|---|---|---|---|
| | 53322 | VALVE, VA450 - CONTROL FALL PROCESSOR (LEVELING) | 1 |
| | 65975 | KIT, HYD FITTING KIT, 450, DISCSAW BASIC | 1 |
| | 65613 | KIT, FITTING DISC LEVEL 450V D-SERIES | 1 |
| 1 | 65457 | 20SFXO & M12 SPLIT FLANGE (CODE 62) | 9 |
| 2 | 18988 | BOLT, ALLEN HEAD - 12MM-1.75P X 45MM **263 RED LOCTITE™** | 24 |
| 3 | 15186 | KIT, SPLIT FLANGE - 1.5" (CODE 61) | 1 |
| 4 | 59135 | BOLT, SHC, 12.9 - M12-1.75P X 80mm **263 RED LOCTITE™** | 16 |
| 5 | 65458 | ANCHOR-ASX-20GP STANDOFF | 4 |
| 6 | 57820 | TAP, GAUGE PORT # 6 SAE - Oring Boss | 1 |
| 7 | 58348 | FITTING, ELBOW 6-AOEG5-5 | 1 |
| 8 | 23015 | ELBOW, 45 - 6 V5OLO-S | 1 |
| 9 | 16360 | ELBOW, 90 - FF1868T-0808S | 1 |
| 10 | 58423 | PLUG - SPLIT FLANGE CODE 62 20PQ2 | 1 |
| 11 | 16358 | BUSHING, REDUCER - 6410-12-10 | 2 |
| 12 | 50039 | CONNECTOR, STR - 848-TTO-10X10 | 1 |
| 13 | 52554 | CONNECTOR, STR LONG - 10X10 | 1 |
| 14 | 20067 | BUSHING, REDUCER - 6410-12-8 | 4 |
| 15 | 15117 | CONNECTOR, STR - FF1852T-0808S | 2 |
| 16 | 19091 | CONNECTOR, STR LONG - 848L-TTO-08X08 | 2 |

# H200-00180 - MAIN VALVE HYD. FITTINGS - CONTROL FALL PROCESSOR (NON-LEVELING) (W450/W300 VALVE)

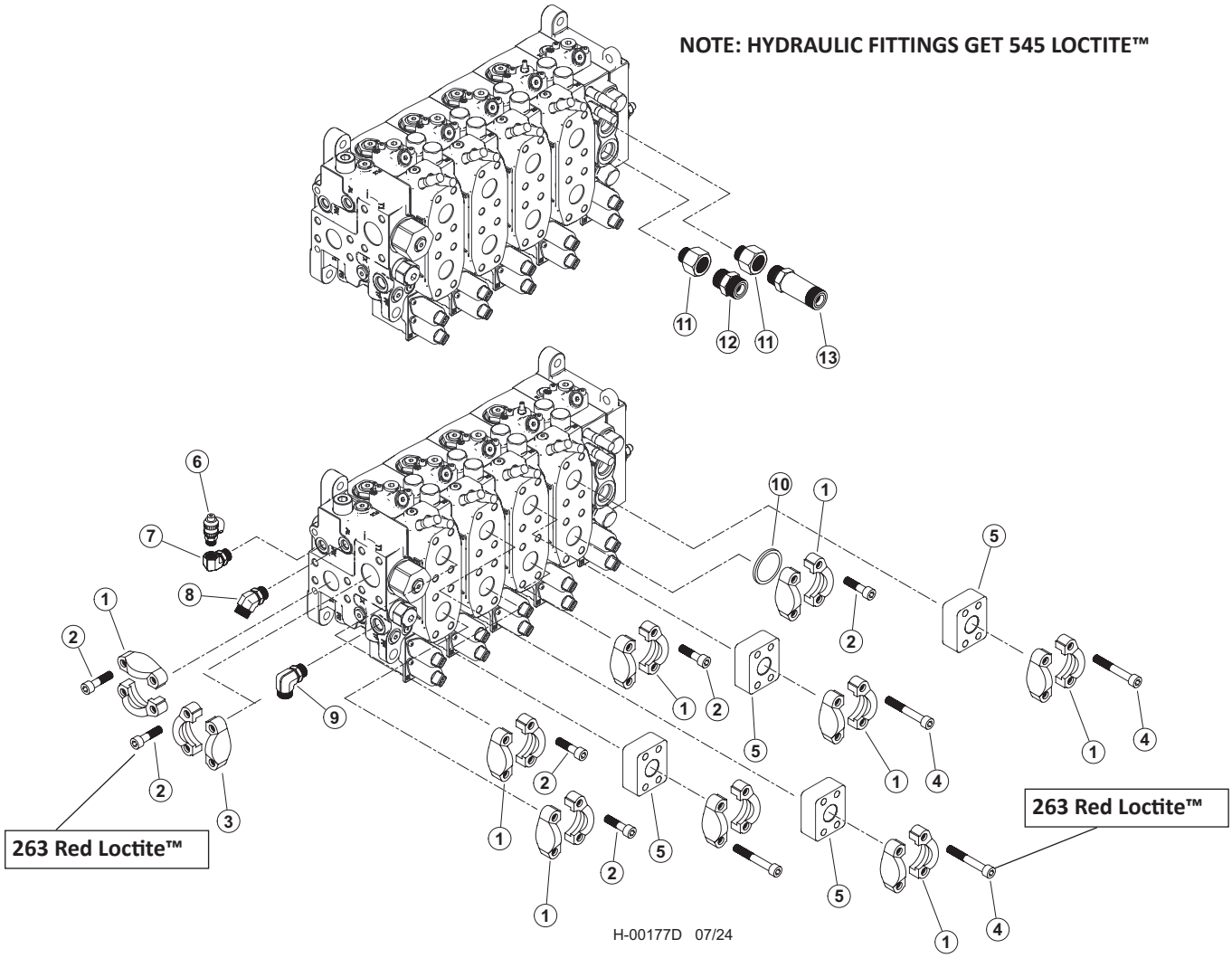


| Item | Part # | Description | Qty. |
|---|---|---|---|
| | 53330 | VALVE, VA450 - CONTROL FALL PROCESSOR (NON-LEVELING) | 1 |
| | 65975 | KIT, HYD FITTING KIT, 450, DISCSAW BASIC | 1 |
| | 65613 | KIT, FITTING DISC LEVEL 450V D-SERIES | 1 |
| 1 | 65457 | 20SFXO & M12 SPLIT FLANGE (CODE 62) | 9 |
| 2 | 18988 | BOLT, ALLEN HEAD - 12MM-1.75P X 45MM **263 RED LOCTITE™** | 24 |
| 3 | 15186 | KIT, SPLIT FLANGE - 1.5” (CODE 61) | 1 |
| 4 | 59135 | BOLT, SHC, 12.9 - M12-1.75P X 80mm **263 RED LOCTITE™** | 16 |
| 5 | 65458 | ANCHOR-ASX-20GP STANDOFF | 4 |
| 6 | 57820 | TAP, GAUGE PORT # 6 SAE - Oring Boss | 1 |
| 7 | 58348 | FITTING, ELBOW 6-AOEG5-5 | 1 |
| 8 | 23015 | ELBOW, 45 - 6 V5OLO-S | 1 |
| 9 | 16360 | ELBOW, 90 - FF1868T-0808S | 1 |
| 10 | 58423 | PLUG - SPLIT FLANGE CODE 62 20PQ2 | 1 |
| 11 | 16358 | BUSHING, REDUCER - 6410-12-10 | 2 |
| 12 | 50039 | CONNECTOR, STR - 848-TTO-10X10 | 1 |
| 13 | 52554 | CONNECTOR, STR LONG - 10X10 | 1 |

# H200-00181 - W450 MAIN VALVE SECTION - INLET - (CONTROL FALL PROCESSOR)

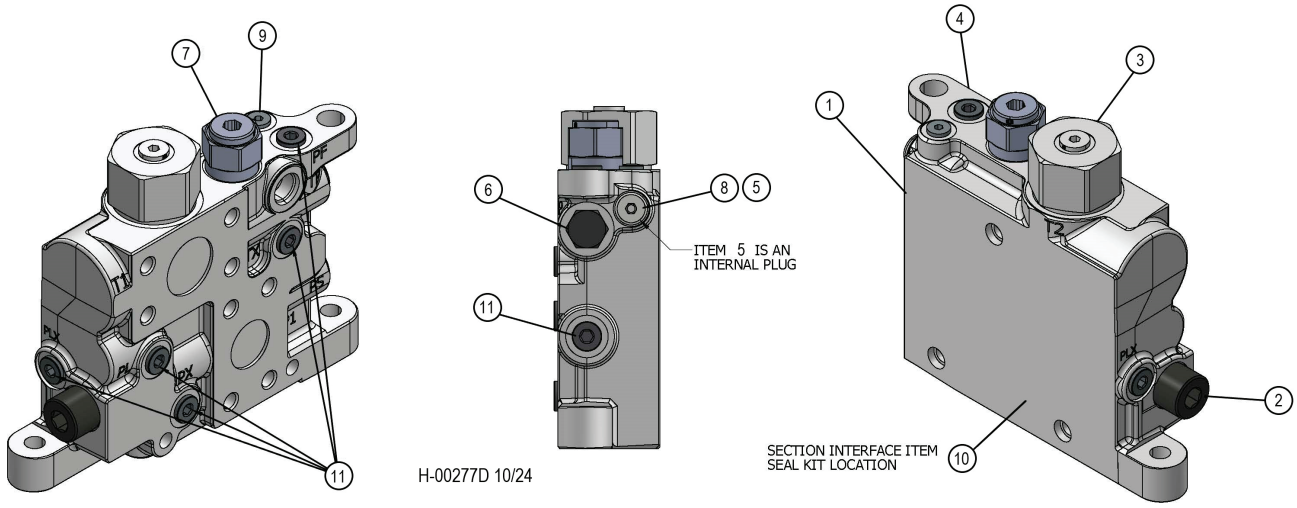


| Item | Part # | Description | Qty. |
|---|---|---|---|
| 1 | 20106626 | VA450 INLET | 1 |
| 2 | 19217256 | PLC182-330-20 RELIEF MAIN R/V 330 BAR 4785 PSI | 1 |
| 3 | 20106606 | MF5 COUNTER PRESSURE VALVE 6764842 | 1 |
| 4 | 20110560 | VA450 BLANK INLET SECTION LSB450 | 1 |
| 5 | 20110554 | TP INTERNAL PLUG | 1 |
| 6 | 19220867 | CHECK CART C08-2 STD 3PSI | 1 |
| 7 | 20090649 | VA300/450 REDUCING VALVE R35 | 1 |
| 8 | 20110562 | PLUG 14MM X 1.5 METRIC | 1 |
| 9 | 19213753 | HOLLOW HEX PLUG SAE-ORB | 1 |
| 10 | 54880 | SEAL KIT VA300 & VA450 INTERSECT | 1 |
| 11 | 19215123 | PLUG #6 SAE HOLLOW HEX | 6 |

# H200-00182 - W450 MAIN VALVE SECTION - TOOL TILT - (CONTROL FALL PROCESSOR)

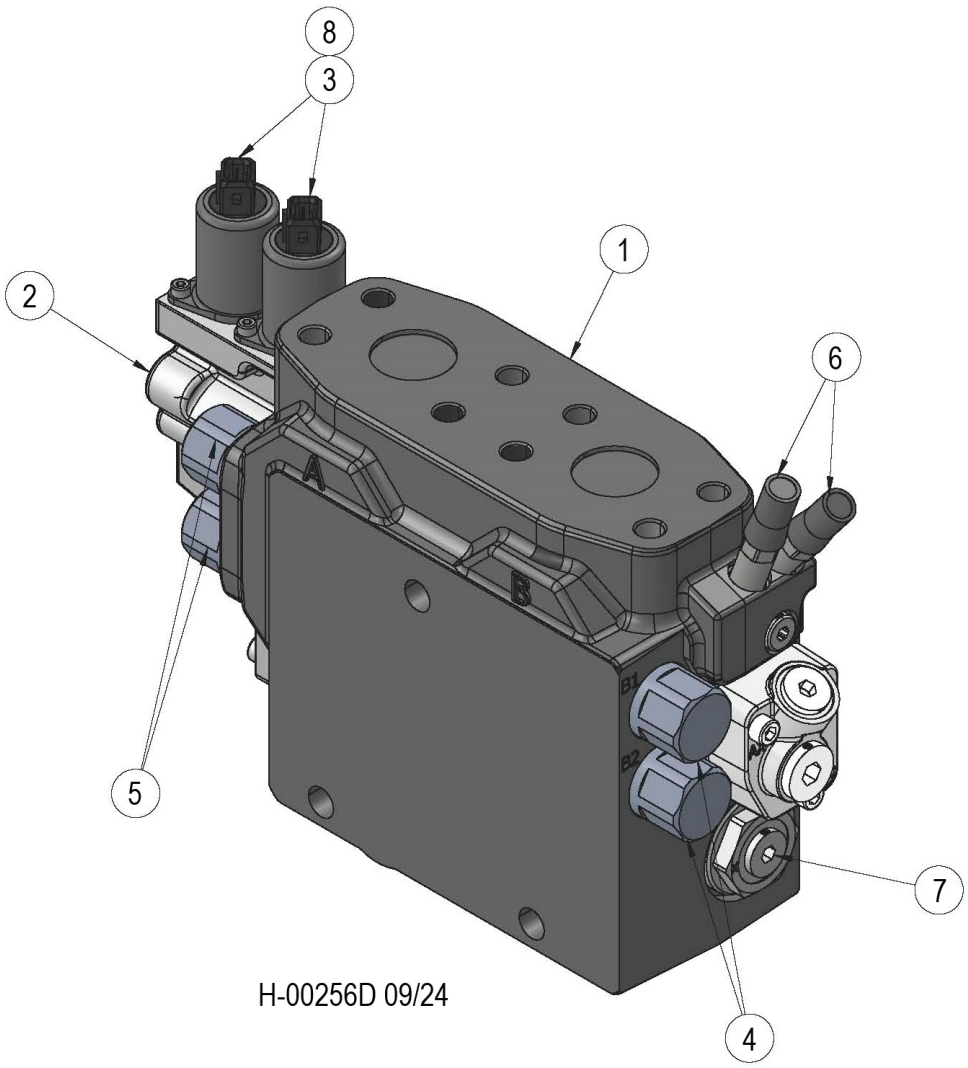


H-00256D 09/24

| Item | Part # | Description | Qty. |
|---|---|---|---|
| 1 | 20108690 | VA450 BUILD PROGRAM WORK SECTION | 1 |
| 2 | 20099915 | KIT EC-CAP COMPLETE U VA450/VA300 ENDCAP W/O STROKE LIMITER | 1 |
| 3 | 699190 | 24 VDC SOLENOID AMP W ORIFICE 0.8 MM | 2 |
| 4 | 19217273 | 300 BAR PORT RELIEF VALVE 9120029917 | 2 |
| 5 | 56472 | 330 BAR PORT RELIEF VALVE | 2 |
| 6 | 699170 | SUPPLY REDUCER MR (K220/L90) W/O TAMPERPROOF CAP | 2 |
| 7 | 55734 | VA450 A AND B SIDE EK COMPENSATOR KIT 6764825 | 1 |
| 8 | 699180 | 1.00MM PILOT ORIFICE 376269610 | 2 |
| * | 20099960 | SPOOL 4AC VA450 HEEL/TOOL TILT SPOOL | 1 |
| * | 699200 | KIT SPRING PACK 6.5-19 BAR STD VA450 6764840 | 1 |
| * | 20107604 | KIT B-SIDE COVER, U/U VA450/VA300 CAP B W/ #8 SAE PLUG | 1 |

*** MEANS NOT SHOWN)**

## H200-00183 - W450 MAIN VALVE SECTION - STICK BOOM - (CONTROL FALL PROCESSOR)

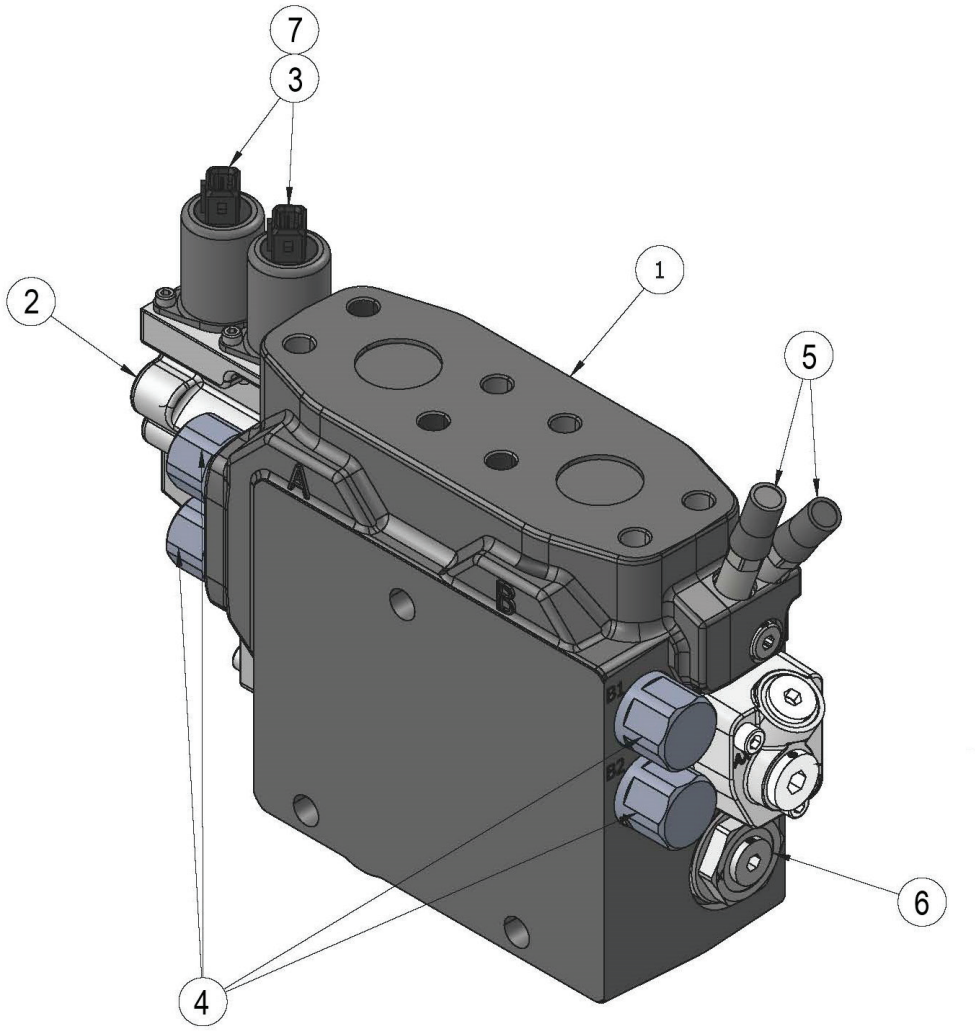


H-00257D 09/24

| Item | Part # | Description | Qty. |
|---|---|---|---|
| 1 | 20108694 | VA450 BUILD PROGRAM WORK SECTION | 1 |
| 2 | 20099915 | KIT EC-CAP COMPLETE U VA450/VA300 ENDCAP W/O STROKE LIMITER | 1 |
| 3 | 699190 | 24 VDC SOLENOID AMP W ORIFICE 0.8 MM | 2 |
| 4 | 56161 | 320 BAR PORT RELIEF VALVE 6760610 | 4 |
| 5 | 699170 | SUPPLY REDUCER MR (K220/L90) W/O TAMPERPROOF CAP | 2 |
| 6 | 55734 | VA450 A AND B SIDE EK COMPENSATOR KIT 6764825 | 1 |
| 7 | 699180 | 1.00MM PILOT ORIFICE 376269610 | 2 |
| * | 20099958 | VA450 STICK 4AA SPOOL | 1 |
| * | 699200 | KIT SPRING PACK 6.5-19 BAR STD VA450 6764840 | 1 |
| * | 20107604 | KIT B-SIDE COVER, U/U VA450/VA300 CAP B W/ #8 SAE PLUG | 1 |

*** MEANS NOT SHOWN)**

## H200-00184 - W450 MAIN VALVE SECTION - MAIN BOOM - (CONTROL FALL PROCESSOR)

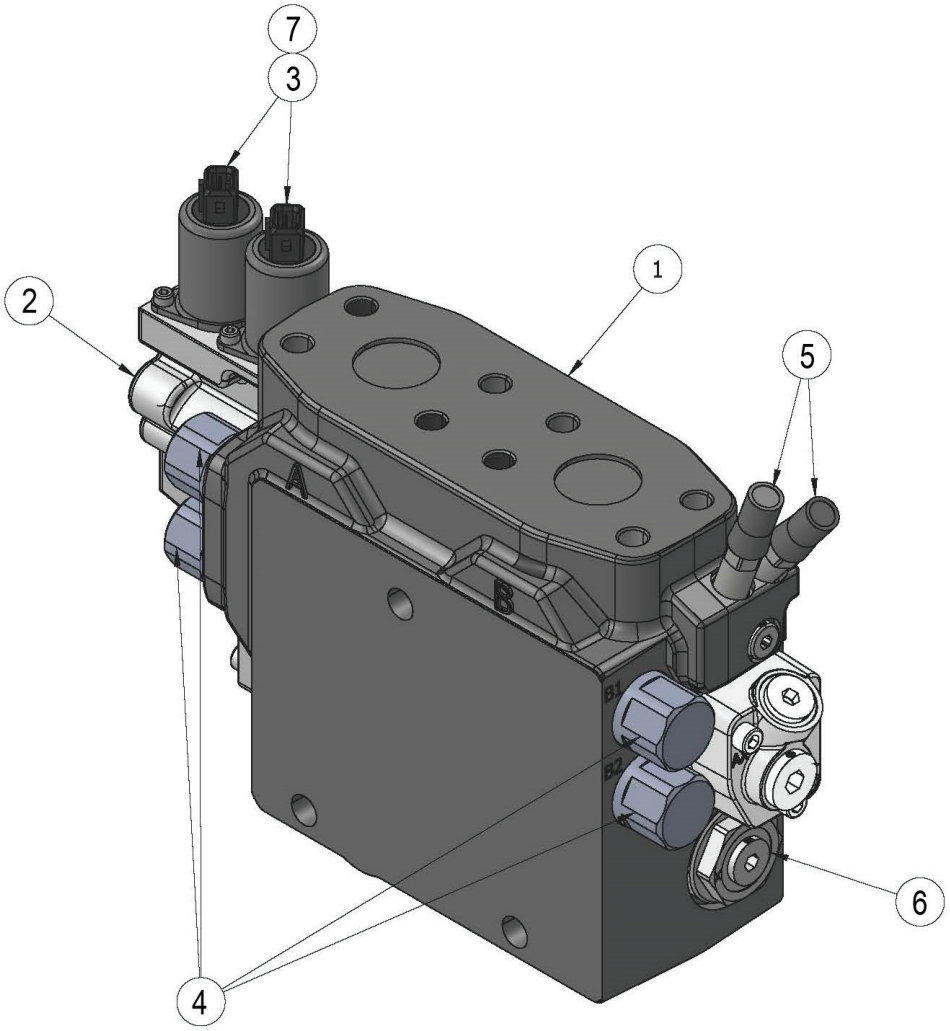


H-00257D 09/24

| Item | Part # | Description | Qty. |
|---|---|---|---|
| 1 | 20108696 | VA450 BUILD PROGRAM WORK SECTION | 1 |
| 2 | 20099915 | KIT EC-CAP COMPLETE U VA450/VA300 ENDCAP W/O STROKE LIMITER | 1 |
| 3 | 699190 | 24 VDC SOLENOID AMP W ORIFICE 0.8 MM | 2 |
| 4 | 56161 | 320 BAR PORT RELIEF VALVE 6760610 | 4 |
| 5 | 699170 | SUPPLY REDUCER MR (K220/L90) W/O TAMPERPROOF CAP | 2 |
| 6 | 55734 | VA450 A AND B SIDE EK COMPENSATOR KIT 6764825 | 1 |
| 7 | 699180 | 1.00MM PILOT ORIFICE 376269610 | 2 |
| * | 57318 | VA450 MAIN BOOM 4AB SPOOL | 1 |
| * | 699200 | KIT SPRING PACK 6.5-19 BAR STD VA450 6764840 | 1 |
| * | 20107604 | KIT B-SIDE COVER, U/U VA450/VA300 CAP B W/ #8 SAE PLUG | 1 |

*** MEANS NOT SHOWN)**

# H200-00185 - W450 MAIN VALVE SECTION - PROCESSOR/SAW (CONTROL FALL PROCESSOR)

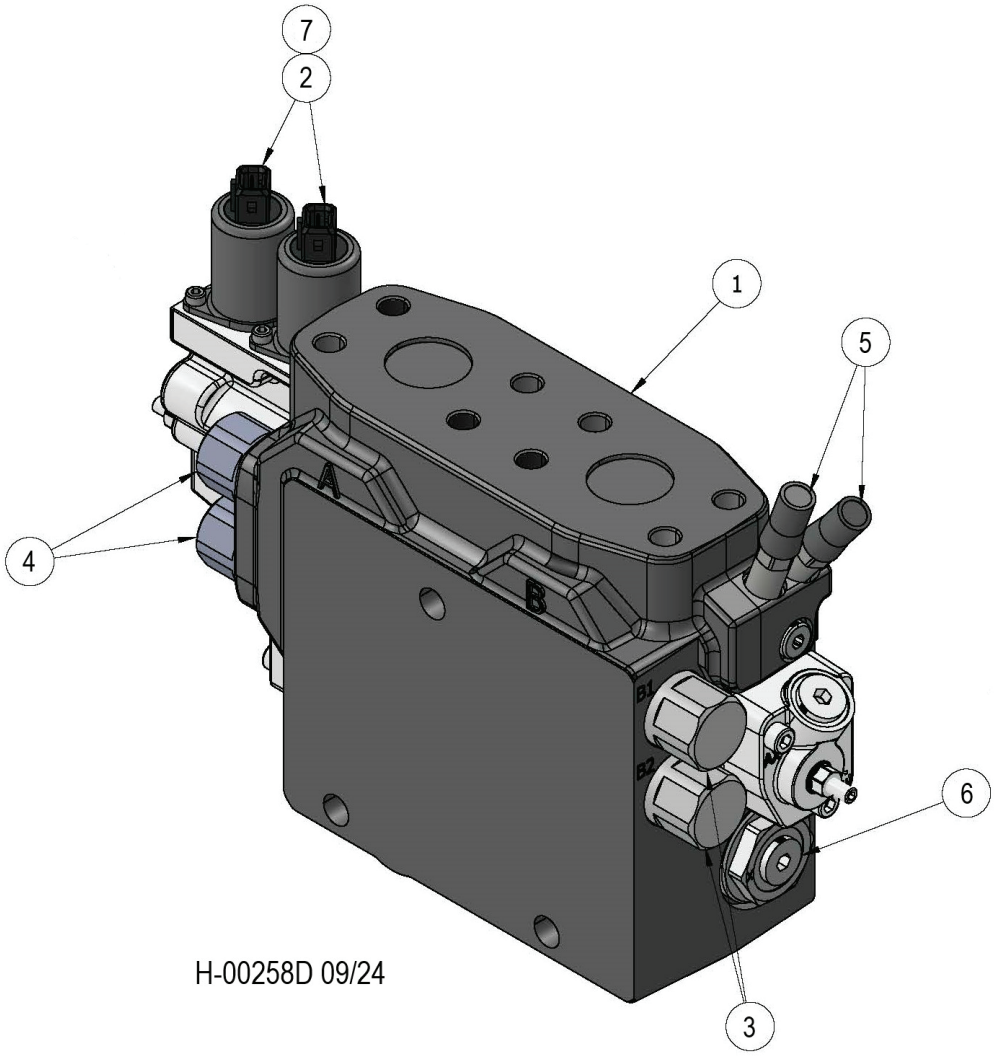


| Item | Part # | Description | Qty. |
|---|---|---|---|
| 1 | 20108702 | VA450 BUILD PROGRAM WORK SECTION | 1 |
| * | 20099963 | SPOOL 4AE VA450 SAW SPOOL | 1 |
| * | 699200 | KIT SPRING PACK 6.5-19 BAR STD VA450 6764840 | 1 |
| * | 53385 | KIT B-SIDE COVER U/M6 VA450/VA300 W/ STROKE LIMITER | 1 |
| * | 20099916 | KIT EC-CAP COMPLETE U/M6 VA450/VA300 END CAP A W/ STROKE LIMITER | 1 |
| 6 | 699190 | 24 VDC SOLENOID AMP W ORIFICE 0.8 MM | 2 |
| 7 | 56473 | PLC185-380-20 A014 KSERI 6760874 | 2 |
| 8 | 56472 | 330 BAR PORT RELIEF VALVE | 2 |
| 9 | 699170 | SUPPLY REDUCER MR (K220/L90) W/O TAMPERPROOF CAP | 2 |
| 10 | 55734 | VA450 A AND B SIDE EK COMPENSATOR KIT 6764825 | 1 |
| 11 | 699180 | 1.00MM PILOT ORIFICE 376269610 | 2 |

***MEANS NOT SHOWN**

# H200-00186 - WS300 MAIN VALVE SECTION - HEAD ROTATE (CONTROL FALL PROCESSOR)

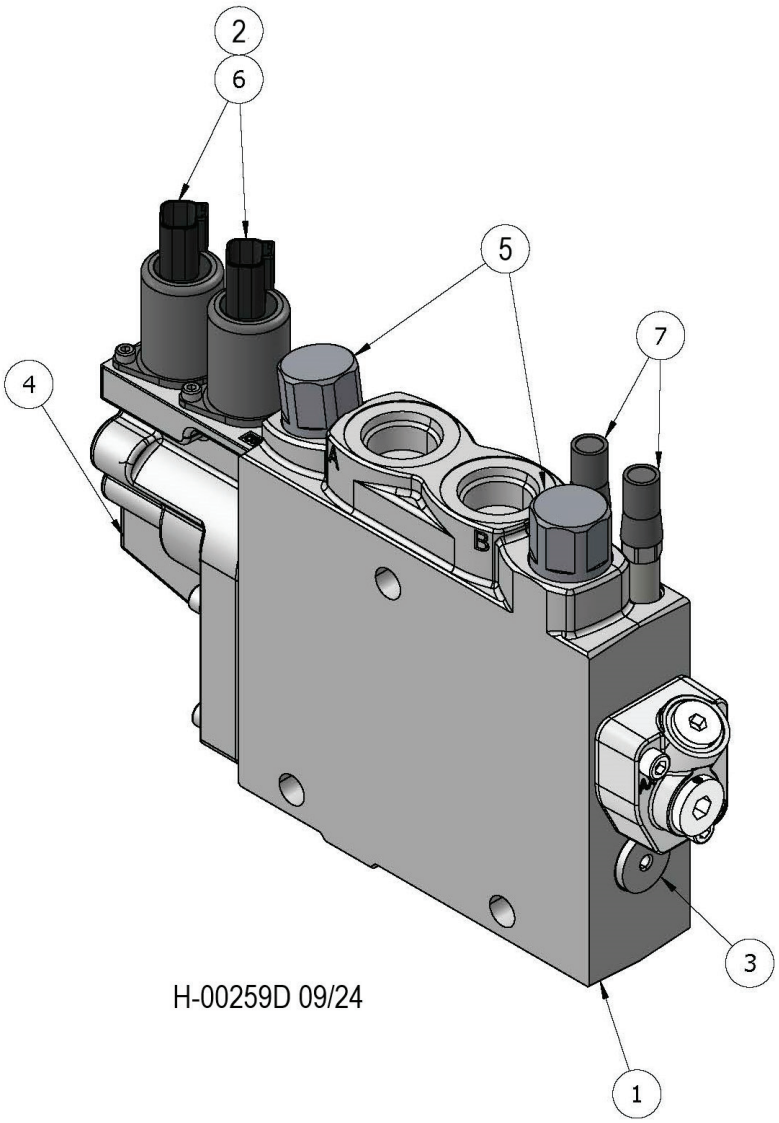


H-00259D 09/24

| Item | Part # | Description | Qty. |
|---|---|---|---|
| 1 | 20108704 | VA300 BUILD PROGRAM WORK SECTION | 1 |
| 2 | 699180 | 1.00MM PILOT ORIFICE 376269610 | 2 |
| 3 | 20106632 | K1 COMP KIT VA300 | 1 |
| 4 | 20099915 | KIT EC-CAP COMPLETE U VA450/VA300 ENDCAP W/O STROKE LIMITER | 1 |
| 5 | 19217272 | 280 BAR WP RELIEF 9120029916 | 2 |
| 6 | 696080 | 24VDC SOLENOID PILOT DEUSTCH W ORIFICE 0.8 MM | 2 |
| 7 | 699170 | SUPPLY REDUCER MR (K220/L90) W/O TAMPERPROOF CAP | 2 |
| * | 53387 | VA300 ROTATE 3AR SPOOL | 1 |
| * | 20107604 | KIT B-SIDE COVER, U/U VA450/VA300 CAP B W/ #8 SAE PLUG | 1 |
| * | 20099909 | KIT SPRING PACK 6 5-19 BAR STD VA450/VA300 SPRING PACK | 1 |

*** MEANS NOT SHOWN)**

# H200-00187 - WS300 MAIN VALVE SECTION - CAB LEVEL - (CONTROL FALL PROCESSOR)

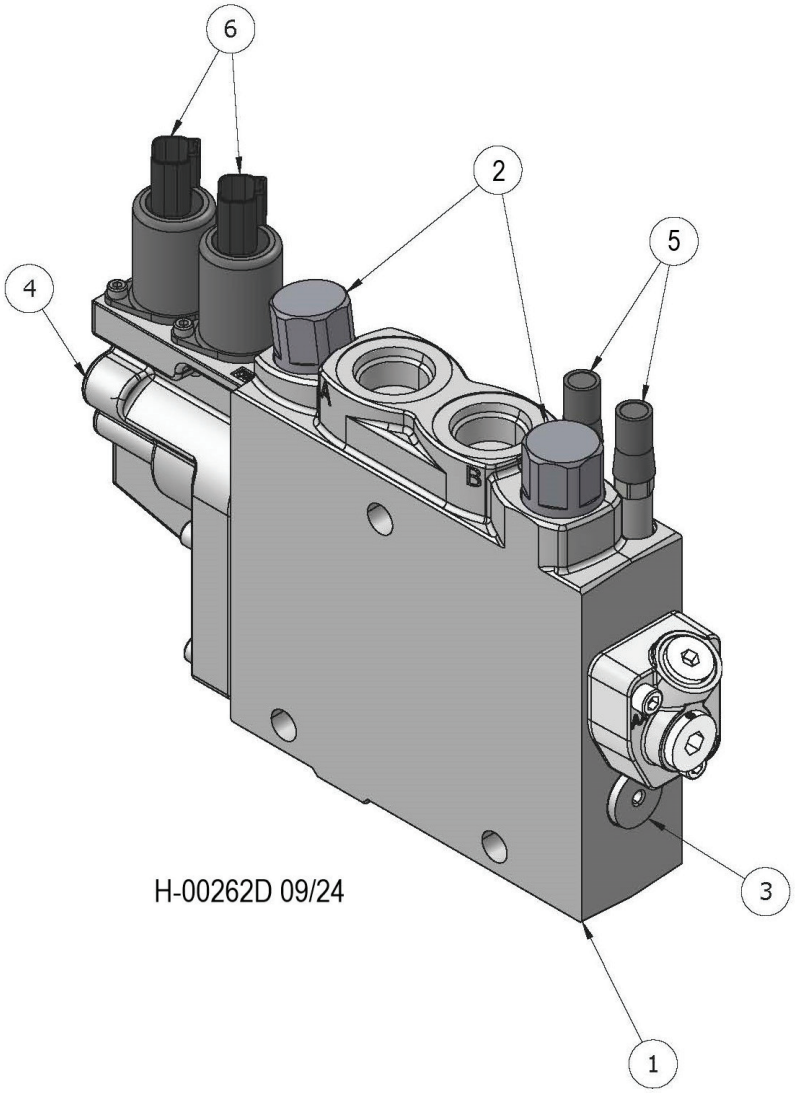


| Item | Part # | Description | Qty. |
|---|---|---|---|
| 1 | 20108705 | VA300 BUILD PROGRAM WORK SECTION | 1 |
| 2 | 19217272 | 280 BAR WP RELIEF 9120029916 | 2 |
| 3 | 20106632 | K1 COMP KIT VA300 | 1 |
| 4 | 20099915 | KIT EC-CAP COMPLETE U VA450/VA300 ENDCAP W/O STROKE LIMITER | 1 |
| 5 | 699170 | SUPPLY REDUCER MR (K220/L90) W/O TAMPERPROOF CAP | 2 |
| 6 | 696080 | 24VDC SOLENOID PILOT DEUSTCH W ORIFICE 0.8 MM | 2 |
| * | 20099965 | VA300 LEVEL 3AW SPOOL | 1 |
| * | 20099909 | KIT SPRING PACK 6 5-19 BAR STD VA450/VA300 SPRING PACK | 1 |
| * | 699180 | 1.00MM PILOT ORIFICE 376269610 | 2 |

*** MEANS NOT SHOWN)**

# H200-00188 - WS300 MAIN VALVE SECTION - OUTLET - (CONTROL FALL PROCESSOR)

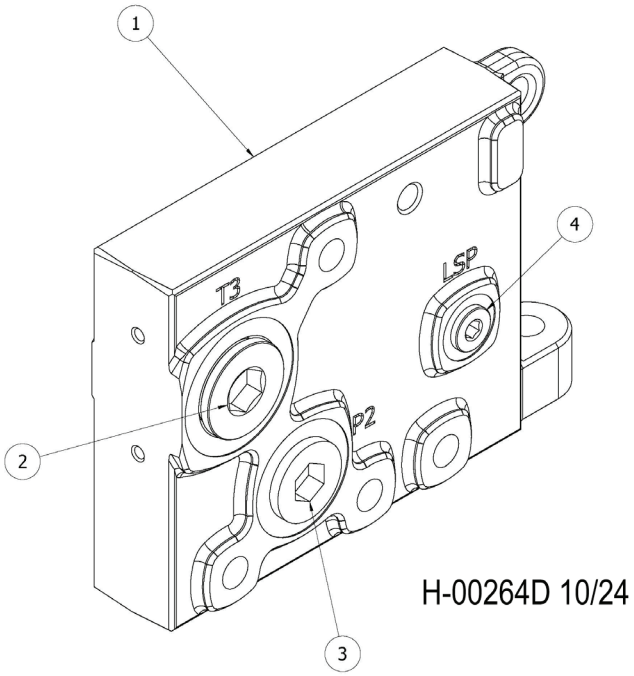


| Item | Part # | Description | Qty. |
|---|---|---|---|
| 1 | 20110351 | VA300/450 BUILD PROGRAM END SECTION | 1 |
| 2 | 19208810 | HOLLOW HEX PLUG SAE-ORB | 1 |
| 3 | 19207916 | HOLLOW HEX PLUG | 1 |
| 4 | 19215123 | PLUG #6 SAE HOLLOW HEX | 1 |

# H200-00190 - BOOM PLATE HYD. FITTINGS - DISC SAW & PROCESSOR ATTACHMENTS (W450/W300 VALVE)

**NOTE: HYDRAULIC FITTINGS GET 545 LOCTITE™**

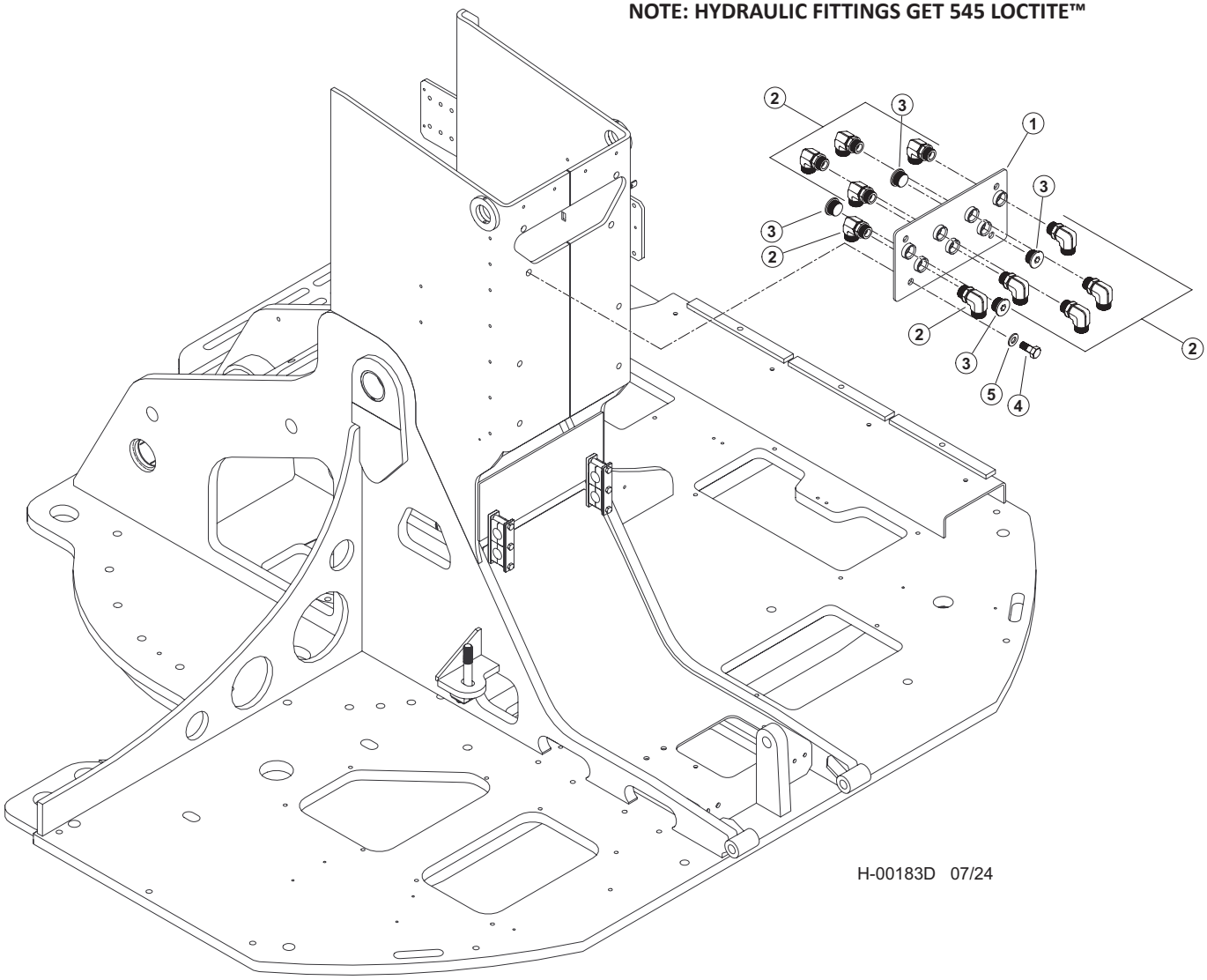


| Item | Part # | Description | Qty. |
|---|---|---|---|
| | 65882 | KIT, HYD FITTING, BH, DISCSAW BASIC | 1 |
| 1 | 60278 | WELDMENT, BUNCHER BOOM BH PLATE | 1 |
| 2 | 15528 | ELBOW, 90 - FF1868T-1616S | 10 |
| 3 | 19847 | PLUG - 6408-HHP-16 | 4 |
| 4 | 10739 | BOLT - .5” X 1.5” | 4 |
| 5 | 10804 | WASHER, FLAT - .5” | 4 |

# H200-00200 - MAIN VALVE HYD. FITTINGS - DANGLE PROCESSOR WITH FIXED ARM (LEVELING) (W450/W300 VALVE)

**NOTE: HYDRAULIC FITTINGS GET 545 LOCTITE™**

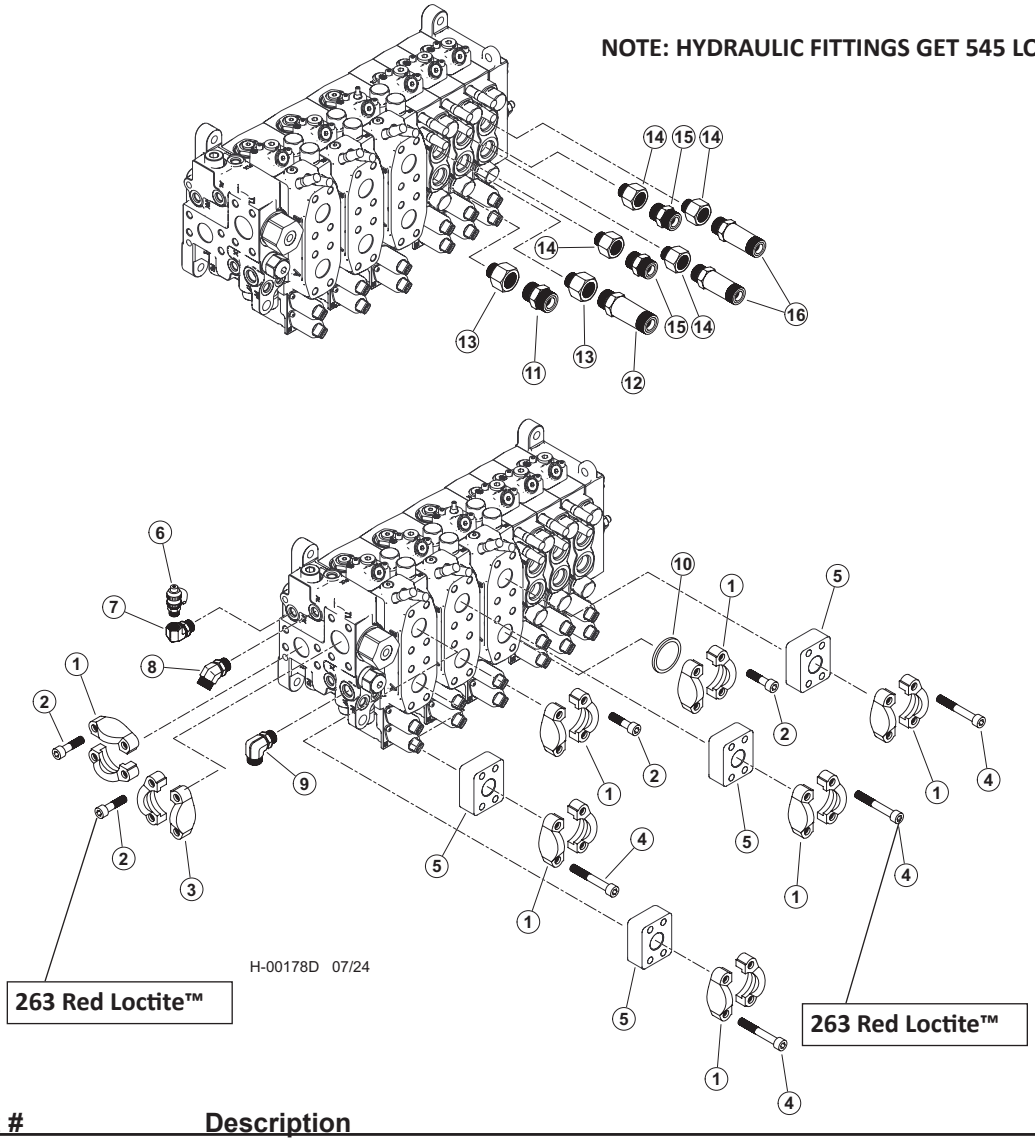


| Item | Part # | Description | Qty. |
|---|---|---|---|
| | 533280 | VALVE, VA450 - FIXED ARM DANGLE PROCESSOR (LEVELING) | 1 |
| | 65899 | KIT, HYD FITTING KIT, 450, PRCSR, FXD | 1 |
| | 65613 | KIT, FITTING DISC LEVEL 450V D-SERIES | 1 |
| 1 | 65457 | 20SFXO & M12 SPLIT FLANGE (CODE 62) | 7 |
| 2 | 18988 | BOLT, ALLEN HEAD - 12MM-1.75P X 45MM **263 RED LOCTITE™** | 24 |
| 3 | 15186 | KIT, SPLIT FLANGE - 1.5" (CODE 61) | 1 |
| 4 | 59135 | BOLT, SHC, 12.9 - M12-1.75P X 80mm **263 RED LOCTITE™** | 16 |
| 5 | 65458 | ANCHOR-ASX-20GP STANDOFF | 4 |
| 6 | 57820 | TAP, GAUGE PORT # 6 SAE - Oring Boss | 1 |
| 7 | 58348 | FITTING, ELBOW 6-AOEG5-5 | 1 |
| 8 | 23015 | ELBOW, 45 - 6 V5OLO-S | 1 |
| 9 | 16360 | ELBOW, 90 - FF1868T-0808S | 1 |
| 10 | 58423 | PLUG - SPLIT FLANGE CODE 62 20PQ2 | 1 |
| 11 | 50039 | CONNECTOR, STR - 848-TTO-10X10 | 1 |
| 12 | 52554 | CONNECTOR, STR LONG - 10X10 | 1 |
| 13 | 16358 | BUSHING, REDUCER - 6410-12-10 | 2 |
| 14 | 20067 | BUSHING, REDUCER - 6410-12-8 | 4 |
| 15 | 15117 | CONNECTOR, STR - FF1852T-0808S | 2 |
| 16 | 19091 | CONNECTOR, STR LONG - 848L-TTO-08X08 | 2 |

# H200-00210 - MAIN VALVE HYD. FITTINGS - DANGLE PROCESSOR WITH FIXED ARM (NON-LEVELING) (W450/W300 VALVE)

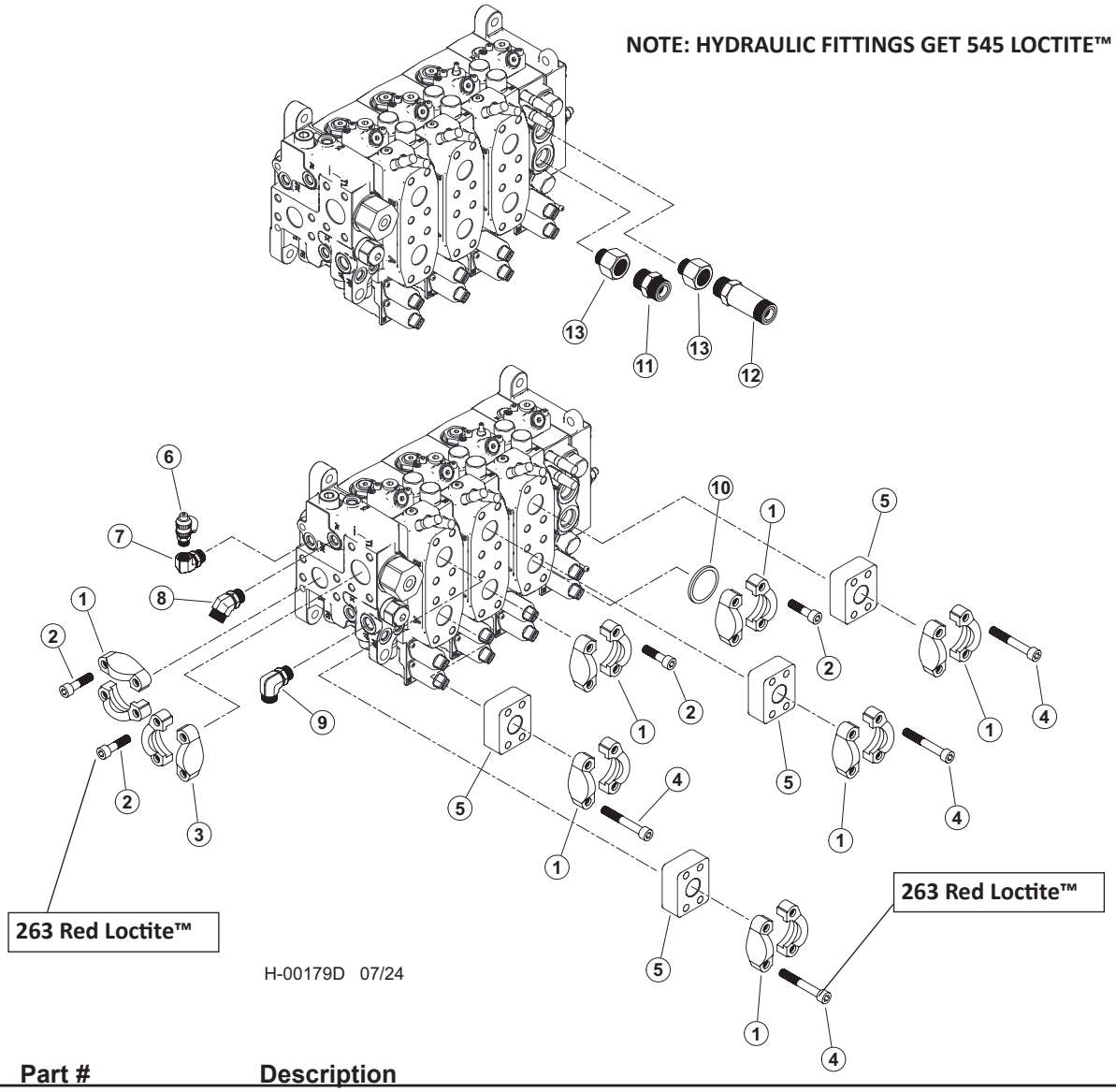


| Item | Part # | Description | Qty. |
|---|---|---|---|
| | 659740 | VALVE, VA450 - FIXED ARM DANGLE PROCESSOR (LEVELING) | 1 |
| | 65899 | KIT, HYD FITTING KIT, 450, PRCSR, FXD | 1 |
| 1 | 65457 | 20SFXO & M12 SPLIT FLANGE (CODE 62) | 7 |
| 2 | 18988 | BOLT, ALLEN HEAD - 12MM-1.75P X 45MM **263 RED LOCTITE™** | 24 |
| 3 | 15186 | KIT, SPLIT FLANGE - 1.5” (CODE 61) | 1 |
| 4 | 59135 | BOLT, SHC, 12.9 - M12-1.75P X 80mm **263 RED LOCTITE™** | 16 |
| 5 | 65458 | ANCHOR-ASX-20GP STANDOFF | 4 |
| 6 | 57820 | TAP, GAUGE PORT # 6 SAE - Oring Boss | 1 |
| 7 | 58348 | FITTING, ELBOW 6-AOEG5-5 | 1 |
| 8 | 23015 | ELBOW, 45 - 6 V5OLO-S | 1 |
| 9 | 16360 | ELBOW, 90 - FF1868T-0808S | 1 |
| 10 | 58423 | PLUG - SPLIT FLANGE CODE 62 20PQ2 | 1 |
| 11 | 50039 | CONNECTOR, STR - 848-TTO-10X10 | 1 |
| 12 | 52554 | CONNECTOR, STR LONG - 10X10 | 1 |
| 13 | 16358 | BUSHING, REDUCER - 6410-12-10 | 2 |

# H200-00211 - W450 MAIN VALVE SECTION - INLET - (FIXED ARM DANGLE PROCESSOR)

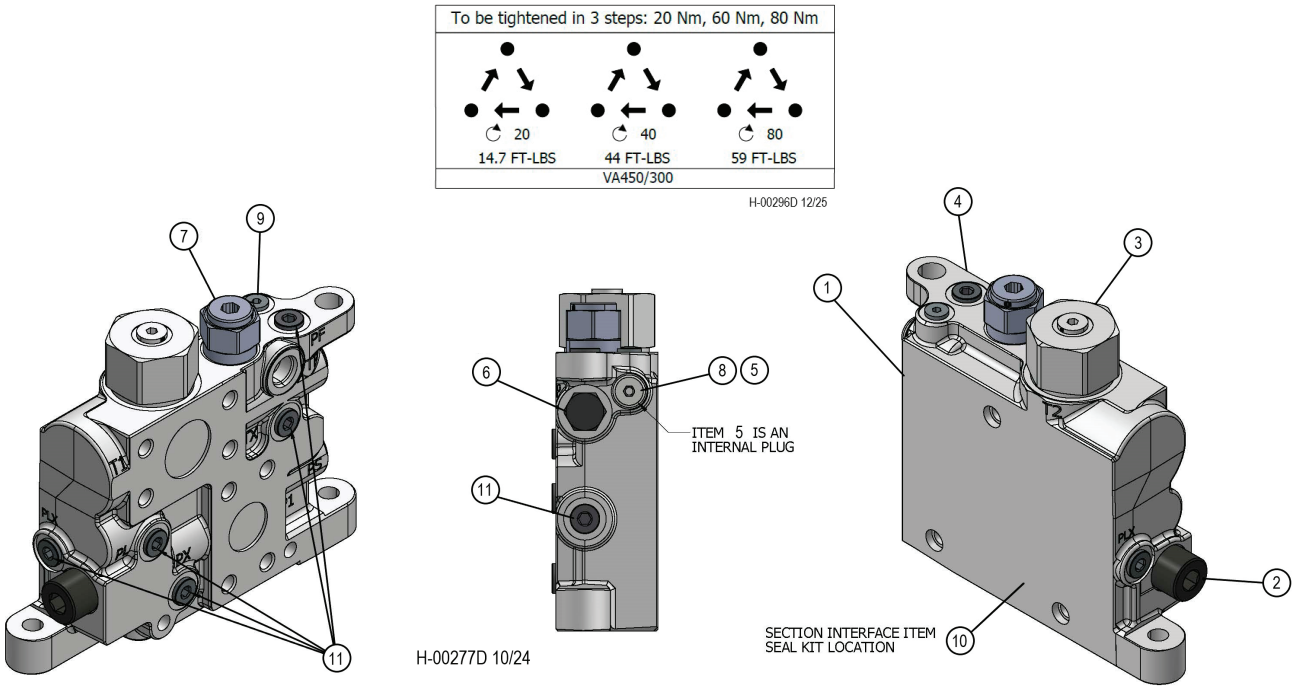


| Item | Part # | Description | Qty. |
|---|---|---|---|
| 1 | 20106626 | VA450 INLET | 1 |
| 2 | 19217256 | PLC182-330-20 RELIEF MAIN R/V 330 BAR 4785 PSI | 1 |
| 3 | 20106606 | MF5 COUNTER PRESSURE VALVE 6764842 | 1 |
| 4 | 20110560 | VA450 BLANK INLET SECTION LSB450 | 1 |
| 5 | 20110554 | TP INTERNAL PLUG | 1 |
| 6 | 19220867 | CHECK CART C08-2 STD 3PSI | 1 |
| 7 | 20090649 | VA300/450 REDUCING VALVE R35 | 1 |
| 8 | 20110562 | PLUG 14MM X 1.5 METRIC | 1 |
| 9 | 19213753 | HOLLOW HEX PLUG SAE-ORB | 1 |
| 10 | 54880 | SEAL KIT VA300 & VA450 INTERSECT | 1 |
| 11 | 19215123 | PLUG #6 SAE HOLLOW HEX | 6 |

# H200-00212 - W450 MAIN VALVE SECTION - STICK BOOM (FIXED ARM DANGLE PROCESSOR)

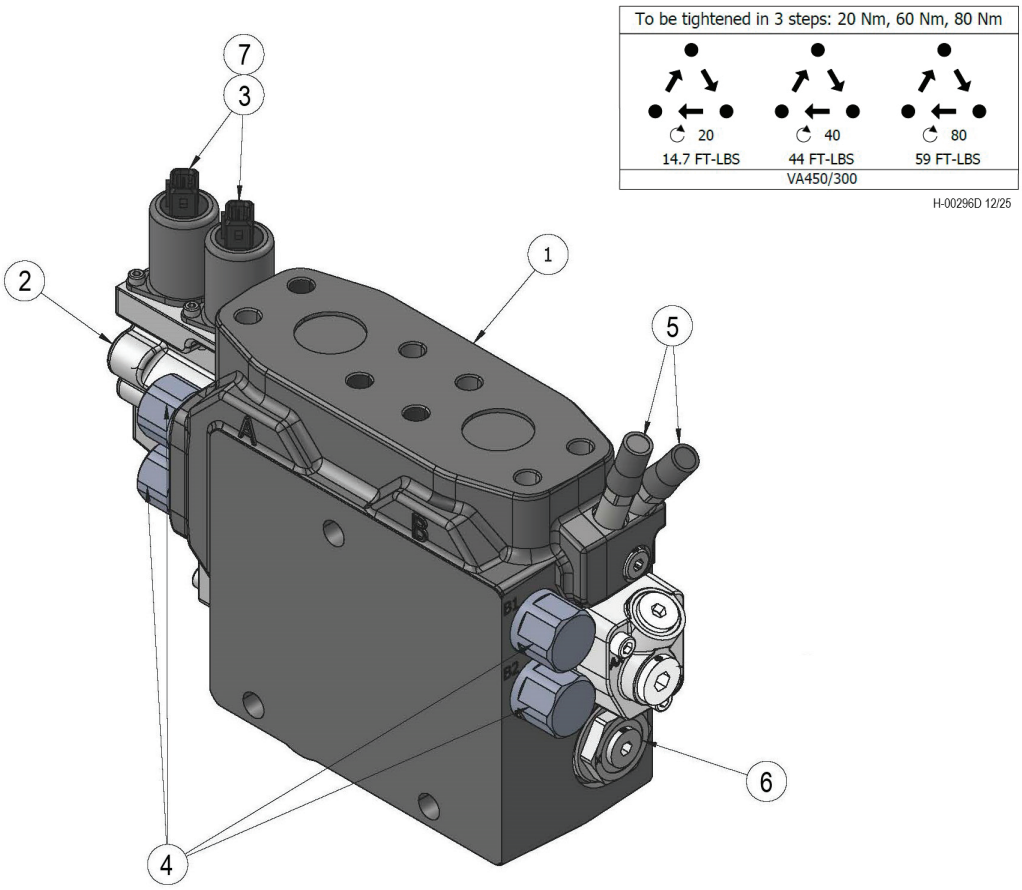


| Item | Part # | Description | Qty. |
|---|---|---|---|
| 1 | 20108694 | VA450 BUILD PROGRAM WORK SECTION | 1 |
| 2 | 20099915 | KIT EC-CAP COMPLETE U VA450/VA300 ENDCAP W/O STROKE LIMITER | 1 |
| 3 | 699190 | 24 VDC SOLENOID AMP W ORIFICE 0.8 MM | 2 |
| 4 | 56161 | 320 BAR PORT RELIEF VALVE 6760610 | 4 |
| 5 | 699170 | SUPPLY REDUCER MR (K220/L90) W/O TAMPERPROOF CAP | 2 |
| 6 | 55734 | VA450 A AND B SIDE EK COMPENSATOR KIT 6764825 | 1 |
| 7 | 699180 | 1.00MM PILOT ORIFICE 376269610 | 2 |
| * | 20099958 | VA450 STICK 4AA SPOOL | 1 |
| * | 699200 | KIT SPRING PACK 6.5-19 BAR STD VA450 6764840 | 1 |
| * | 20107604 | KIT B-SIDE COVER, U/U VA450/VA300 CAP B W/ #8 SAE PLUG | 1 |

*** MEANS NOT SHOWN)**

# H200-00214 - W450 MAIN VALVE SECTION - PROCESSOR / SAW (FIXED ARM DANGLE PROCESSOR)

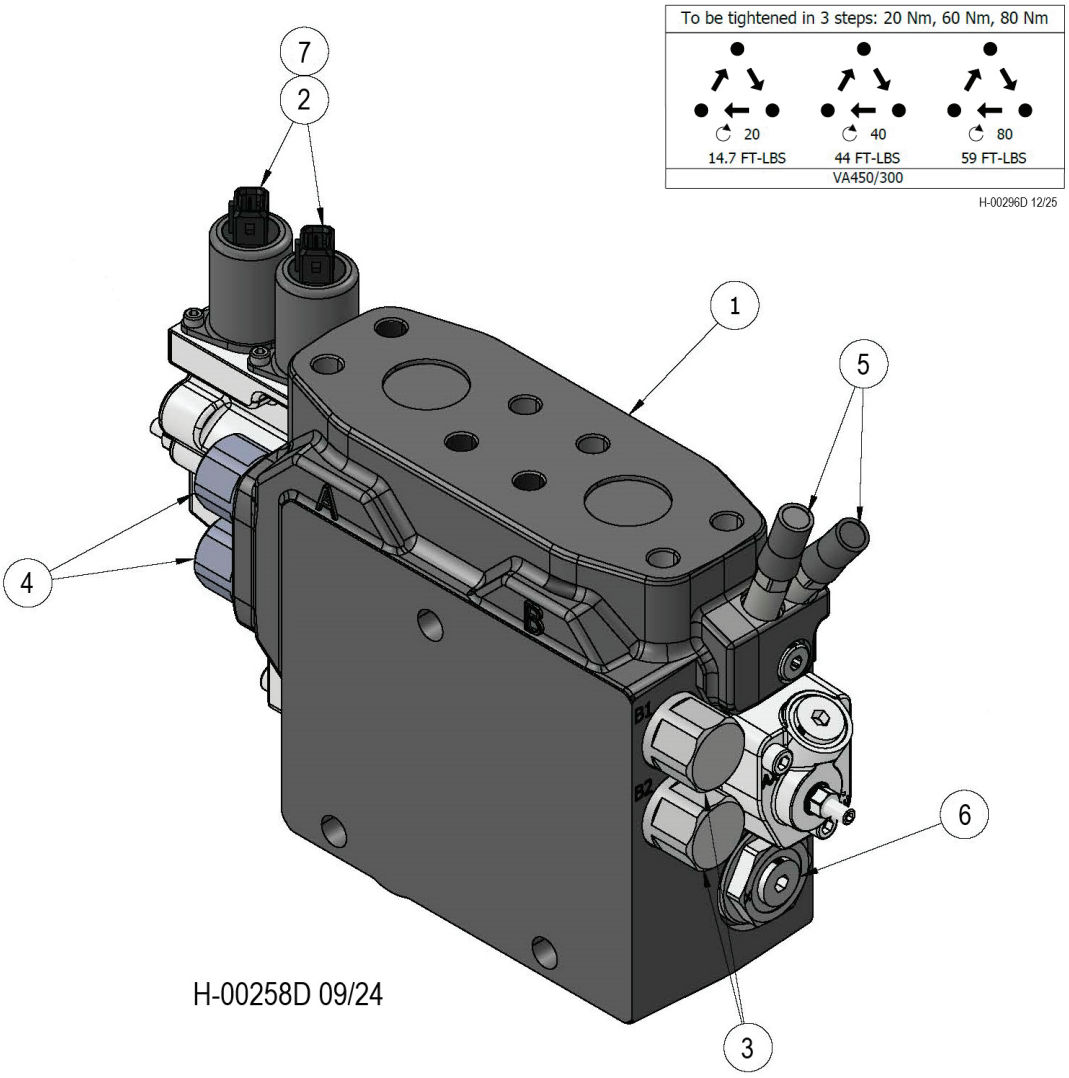


| Item | Part # | Description | Qty. |
|---|---|---|---|
| 1 | 20108702 | VA450 BUILD PROGRAM WORK SECTION | 1 |
| * | 20099963 | SPOOL 4AE VA450 SAW SPOOL | 1 |
| * | 699200 | KIT SPRING PACK 6.5-19 BAR STD VA450 6764840 | 1 |
| * | 53385 | KIT B-SIDE COVER U/M6 VA450/VA300 W/ STROKE LIMITER | 1 |
| * | 20099916 | KIT EC-CAP COMPLETE U/M6 VA450/VA300 END CAP A W/ STROKE LIMITER | 1 |
| 6 | 699190 | 24 VDC SOLENOID AMP W ORIFICE 0.8 MM | 2 |
| 7 | 56473 | PLC185-380-20 A014 KSERI 6760874 | 2 |
| 8 | 56472 | 330 BAR PORT RELIEF VALVE | 2 |
| 9 | 699170 | SUPPLY REDUCER MR (K220/L90) W/O TAMPERPROOF CAP | 2 |
| 10 | 55734 | VA450 A AND B SIDE EK COMPENSATOR KIT 6764825 | 1 |
| 11 | 699180 | 1.00MM PILOT ORIFICE 376269610 | 2 |

***MEANS NOT SHOWN**

# H200-00213 - W450 MAIN VALVE SECTION - MAIN BOOM (FIXED ARM DANGLE PROCESSOR)

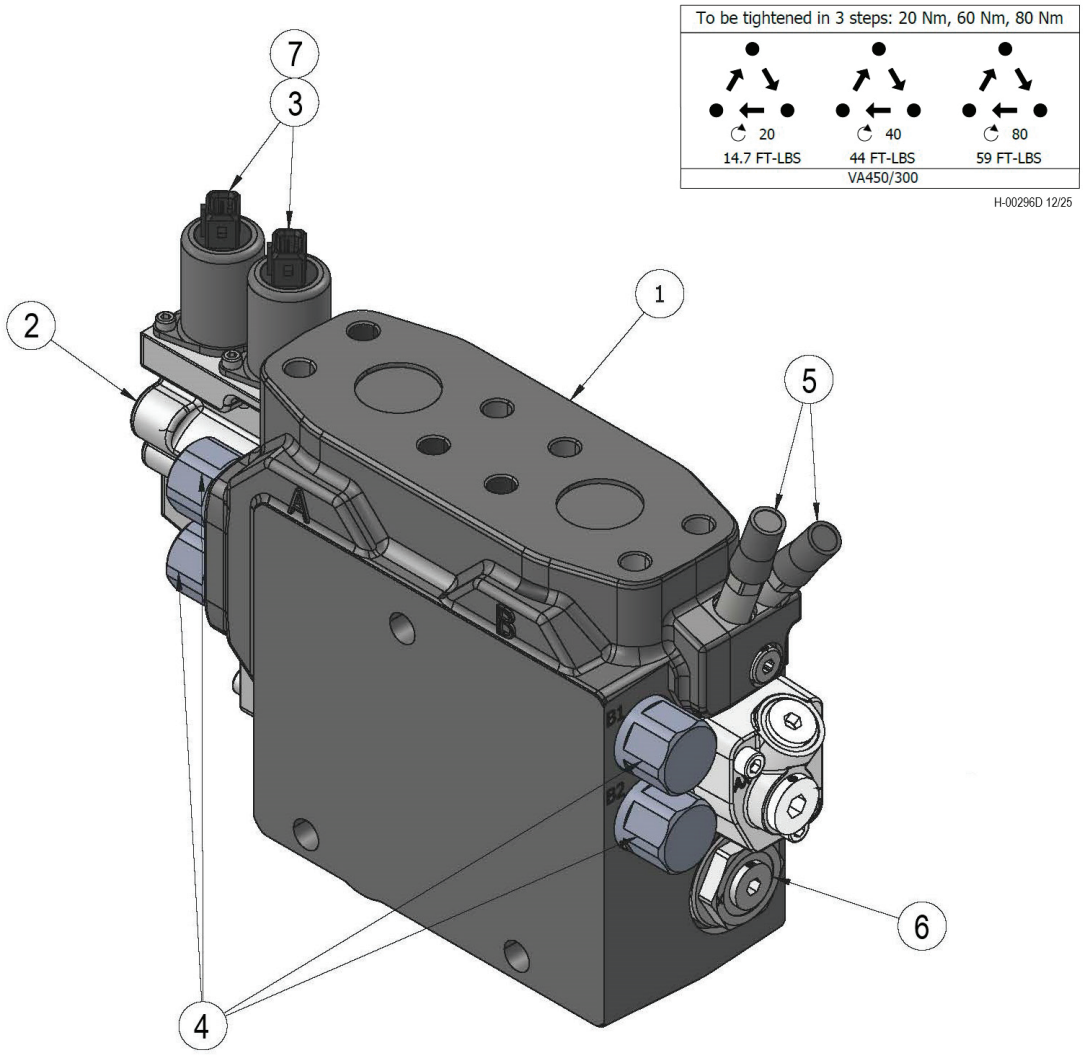


H-00257D 09/24

| Item | Part # | Description | Qty. |
|---|---|---|---|
| 1 | 20108696 | VA450 BUILD PROGRAM WORK SECTION | 1 |
| 2 | 20099915 | KIT EC-CAP COMPLETE U VA450/VA300 ENDCAP W/O STROKE LIMITER | 1 |
| 3 | 699190 | 24 VDC SOLENOID AMP W ORIFICE 0.8 MM | 2 |
| 4 | 56161 | 320 BAR PORT RELIEF VALVE 6760610 | 4 |
| 5 | 699170 | SUPPLY REDUCER MR (K220/L90) W/O TAMPERPROOF CAP | 2 |
| 6 | 55734 | VA450 A AND B SIDE EK COMPENSATOR KIT 6764825 | 1 |
| 7 | 699180 | 1.00MM PILOT ORIFICE 376269610 | 2 |
| * | 57318 | VA450 MAIN BOOM 4AB SPOOL | 1 |
| * | 699200 | KIT SPRING PACK 6.5-19 BAR STD VA450 6764840 | 1 |
| * | 20107604 | KIT B-SIDE COVER, U/U VA450/VA300 CAP B W/ #8 SAE PLUG | 1 |

*** MEANS NOT SHOWN)**

# H200-00215 - WS300 MAIN VALVE SECTION - ROTATE - (FIXED ARM DANGLE PROCESSOR)

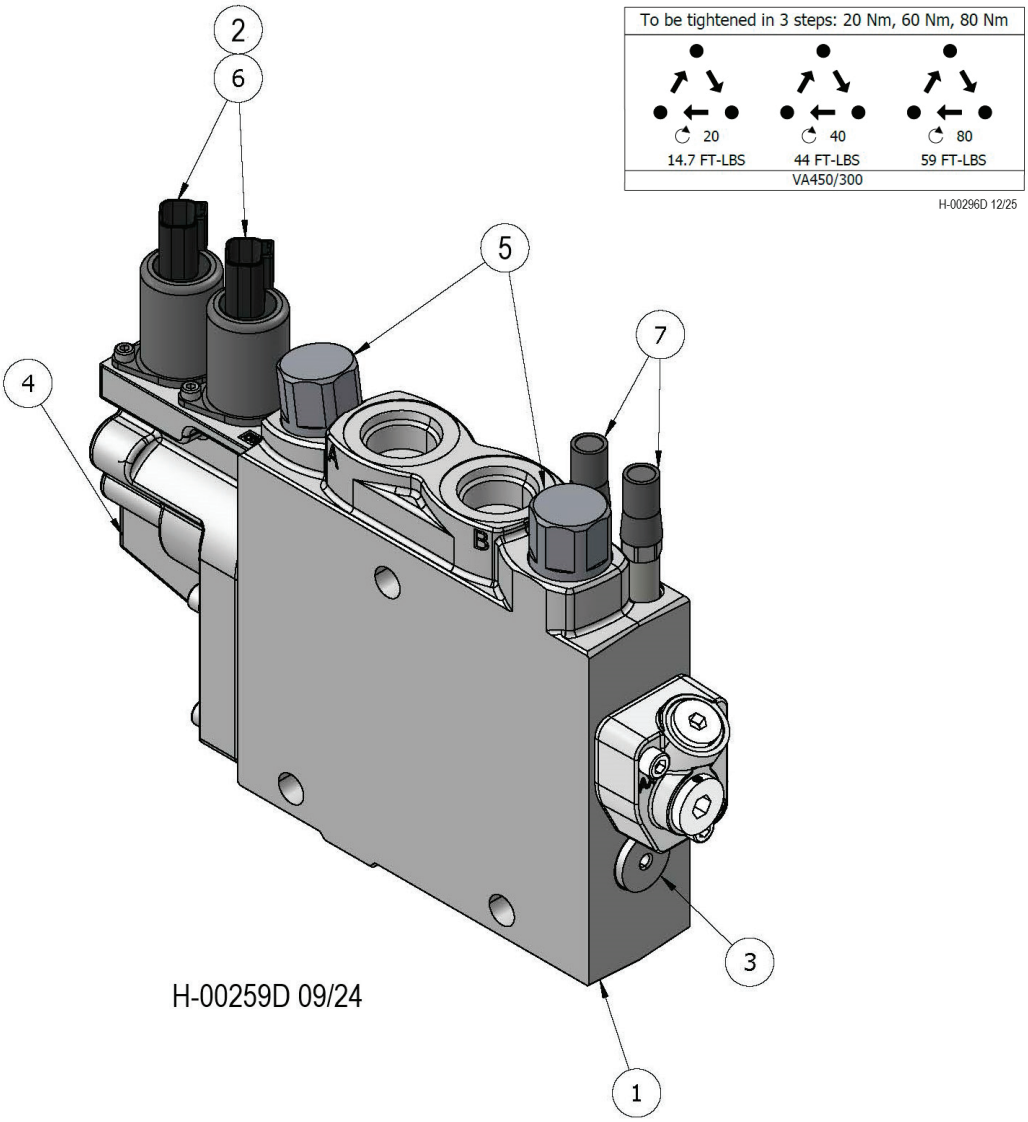


| Item | Part # | Description | Qty. |
|---|---|---|---|
| 1 | 20108704 | VA300 BUILD PROGRAM WORK SECTION | 1 |
| 2 | 699180 | 1.00MM PILOT ORIFICE 376269610 | 2 |
| 3 | 20106632 | K1 COMP KIT VA300 | 1 |
| 4 | 20099915 | KIT EC-CAP COMPLETE U VA450/VA300 ENDCAP W/O STROKE LIMITER | 1 |
| 5 | 19217272 | 280 BAR WP RELIEF 9120029916 | 2 |
| 6 | 696080 | 24VDC SOLENOID PILOT DEUSTCH W ORIFICE 0.8 MM | 2 |
| 7 | 699170 | SUPPLY REDUCER MR (K220/L90) W/O TAMPERPROOF CAP | 2 |
| * | 53387 | SPOOL, VA300, 3AR | 1 |
| * | 20107604 | KIT B-SIDE COVER, U/U VA450/VA300 CAP B W/ #8 SAE PLUG | 1 |
| * | 20099909 | KIT SPRING PACK 6 5-19 BAR STD VA450/VA300 SPRING PACK | 1 |

*** MEANS NOT SHOWN)**

# H200-00216 - WS300 MAIN VALVE SECTION - CAB LEVEL (FIXED ARM DANGLE PROCESSOR)

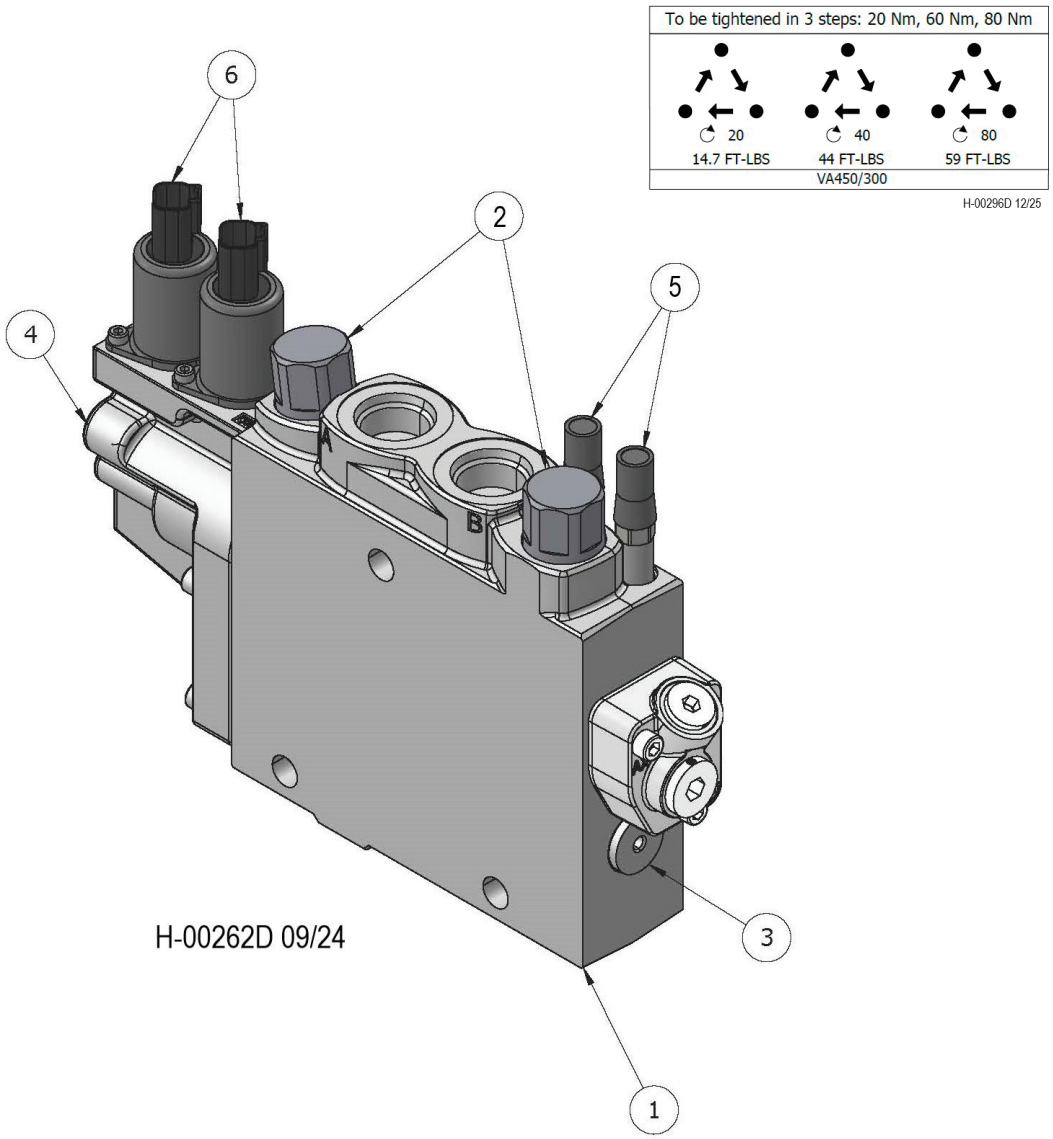


| Item | Part # | Description | Qty. |
|---|---|---|---|
| 1 | 20108705 | VA300 BUILD PROGRAM WORK SECTION | 1 |
| 2 | 19217272 | 280 BAR WP RELIEF 9120029916 | 2 |
| 3 | 20106632 | K1 COMP KIT VA300 | 1 |
| 4 | 20099915 | KIT EC-CAP COMPLETE U VA450/VA300 ENDCAP W/O STROKE LIMITER | 1 |
| 5 | 699170 | SUPPLY REDUCER MR (K220/L90) W/O TAMPERPROOF CAP | 2 |
| 6 | 696080 | 24VDC SOLENOID PILOT DEUSTCH W ORIFICE 0.8 MM | 2 |
| * | 20099965 | VA300 LEVEL 3AW SPOOL | 1 |
| * | 20099909 | KIT SPRING PACK 6 5-19 BAR STD VA450/VA300 SPRING PACK | 1 |
| * | 699180 | 1.00MM PILOT ORIFICE 376269610 | 2 |

*** MEANS NOT SHOWN)**

# H200-00217 - WS300 MAIN VALVE SECTION - OUTLET
# (FIXED ARM DANGLE PROCESSOR)

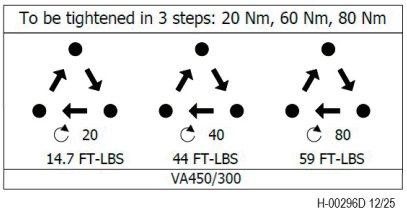


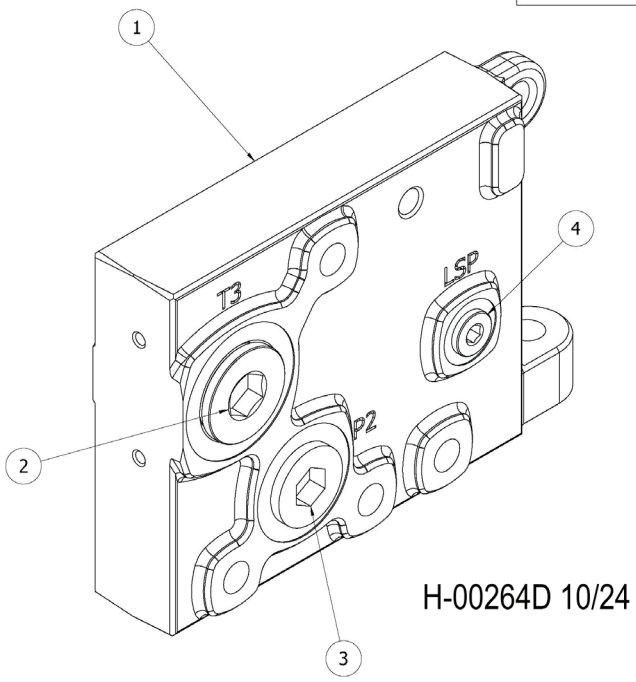


| Item | Part # | Description | Qty. |
|---|---|---|---|
| 1 | 20110351 | VA300/450 BUILD PROGRAM END SECTION | 1 |
| 2 | 19208810 | HOLLOW HEX PLUG SAE-ORB | 1 |
| 3 | 19207916 | HOLLOW HEX PLUG | 1 |
| 4 | 19215123 | PLUG #6 SAE HOLLOW HEX | 1 |

# H200-00220 - MAIN VALVE HYD. FITTINGS - DANGLE PROCESSOR WITH SQUIRT BOOM (LEVELING) (W450/W300 VALVE)

**NOTE: HYDRAULIC FITTINGS GET 545 LOCTITE™**

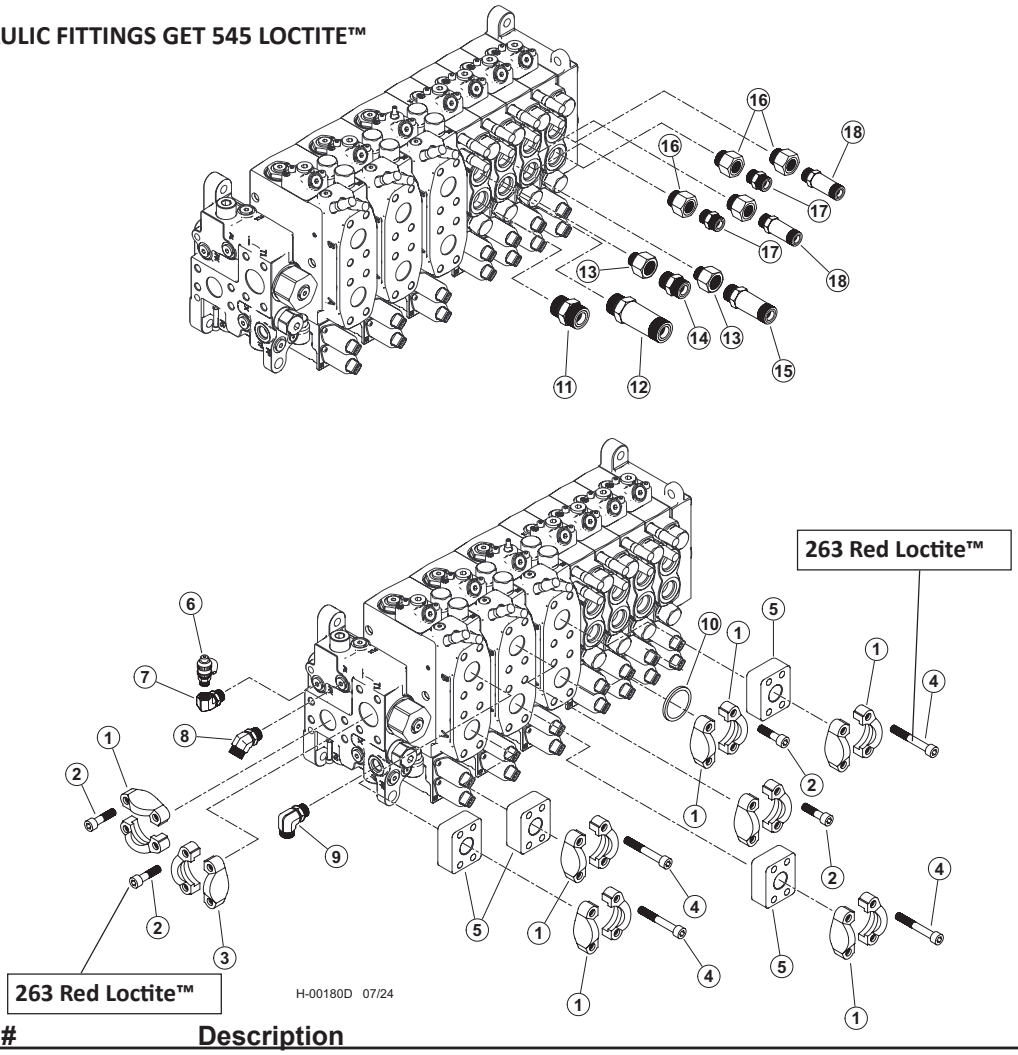


| Item | Part # | Description | Qty. |
|---|---|---|---|
| | 53336 | VALVE, VA450 - SQUIRT ARM DANGLE PROCESSOR (LEVELING) | 1 |
| | 664830 | KIT, HYD FITTING KIT, 450, PRCSR, SQUIRT | 1 |
| | 65613 | KIT, FITTING DISC LEVEL 450V D-SERIES | 1 |
| 1 | 65457 | 20SFXO & M12 SPLIT FLANGE (CODE 62) | 7 |
| 2 | 18988 | BOLT, ALLEN HEAD - 12MM-1.75P X 45MM **263 RED LOCTITE™** | 16 |
| 3 | 15186 | KIT, SPLIT FLANGE - 1.5" (CODE 61) | 1 |
| 4 | 59135 | BOLT, SHC, 12.9 - M12-1.75P X 80mm **263 RED LOCTITE™** | 16 |
| 5 | 65458 | ANCHOR-ASX-20GP STANDOFF | 4 |
| 6 | 57820 | TAP, GAUGE PORT # 6 SAE - Oring Boss | 1 |
| 7 | 58348 | FITTING, ELBOW 6-AOEG5-5 | 1 |
| 8 | 23015 | ELBOW, 45 - 6 V5OLO-S | 1 |
| 9 | 16360 | ELBOW, 90 - FF1868T-0808S | 1 |
| 10 | 58423 | PLUG - SPLIT FLANGE CODE 62 20PQ2 | 1 |
| 11 | 15152 | CONNECTOR, STR - FF1852T-1212S | 1 |
| 12 | 19092 | CONNECTOR, STR LONG - 848L-TTO-12X12 | 1 |
| 13 | 16358 | BUSHING, REDUCER - 6410-12-10 | 2 |
| 14 | 50039 | CONNECTOR, STR - 848-TTO-10X10 | 1 |
| 15 | 52554 | CONNECTOR, STR LONG - 10X10 | 1 |
| 16 | 20067 | BUSHING, REDUCER - 6410-12-8 | 4 |
| 17 | 15117 | CONNECTOR, STR - FF1852T-0808S | 2 |
| 18 | 19091 | CONNECTOR, STR LONG - 848L-TTO-08X08 | 2 |

# H200-00230 - MAIN VALVE HYD. FITTINGS - DANGLE PROCESSOR WITH SQUIRT BOOM (NON-LEVELING) (W450/W300 VALVE)

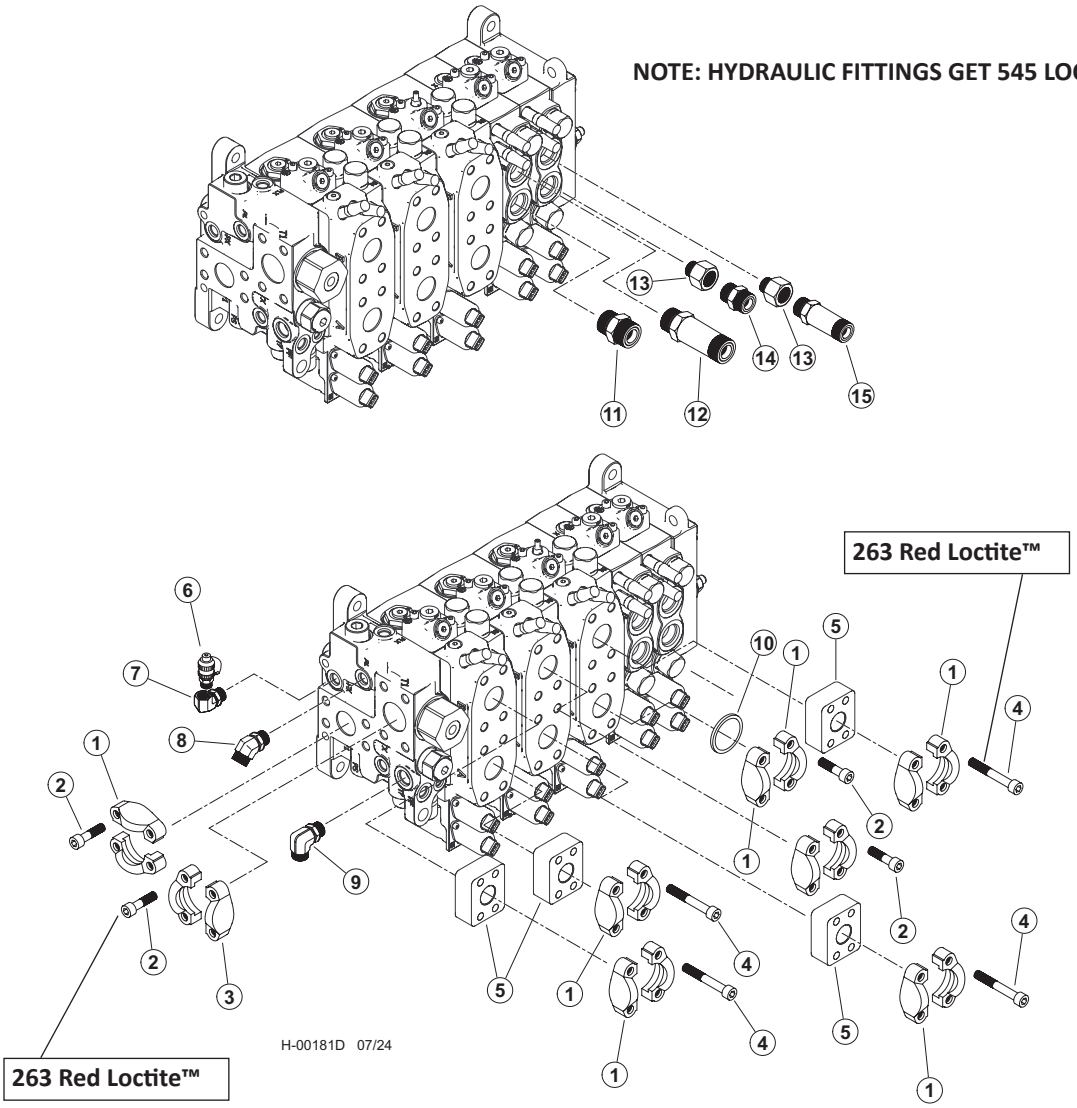


| Item | Part # | Description | Qty. |
|---|---|---|---|
| | 65973 | VALVE, VA450 - SQUIRT ARM DANGLE PROCESSOR (NON-LEVELING) | 1 |
| | 664830 | KIT, HYD FITTING KIT, 450, PRCSR, SQUIRT | 1 |
| | 65613 | KIT, FITTING DISC LEVEL 450V D-SERIES | 1 |
| 1 | 65457 | 20SFXO & M12 SPLIT FLANGE (CODE 62) | 7 |
| 2 | 18988 | BOLT, ALLEN HEAD - 12MM-1.75P X 45MM **263 RED LOCTITE™** | 16 |
| 3 | 15186 | KIT, SPLIT FLANGE - 1.5” (CODE 61) | 1 |
| 4 | 59135 | BOLT, SHC, 12.9 - M12-1.75P X 80mm **263 RED LOCTITE™** | 16 |
| 5 | 65458 | ANCHOR-ASX-20GP STANDOFF | 4 |
| 6 | 57820 | TAP, GAUGE PORT # 6 SAE - Oring Boss | 1 |
| 7 | 58348 | FITTING, ELBOW 6-AOEG5-5 | 1 |
| 8 | 23015 | ELBOW, 45 - 6 V5OLO-S | 1 |
| 9 | 16360 | ELBOW, 90 - FF1868T-0808S | 1 |
| 10 | 58423 | PLUG - SPLIT FLANGE CODE 62 20PQ2 | 1 |
| 11 | 15152 | CONNECTOR, STR - FF1852T-1212S | 1 |
| 12 | 19092 | CONNECTOR, STR LONG - 848L-TTO-12X12 | 1 |
| 13 | 16358 | BUSHING, REDUCER - 6410-12-10 | 2 |
| 14 | 50039 | CONNECTOR, STR - 848-TTO-10X10 | 1 |
| 15 | 52554 | CONNECTOR, STR LONG - 10X10 | 1 |

# H200-00231 - WS450 MAIN VALVE SECTION - INLET
# (SQUIRT ARM DANGLE PROCESSOR)

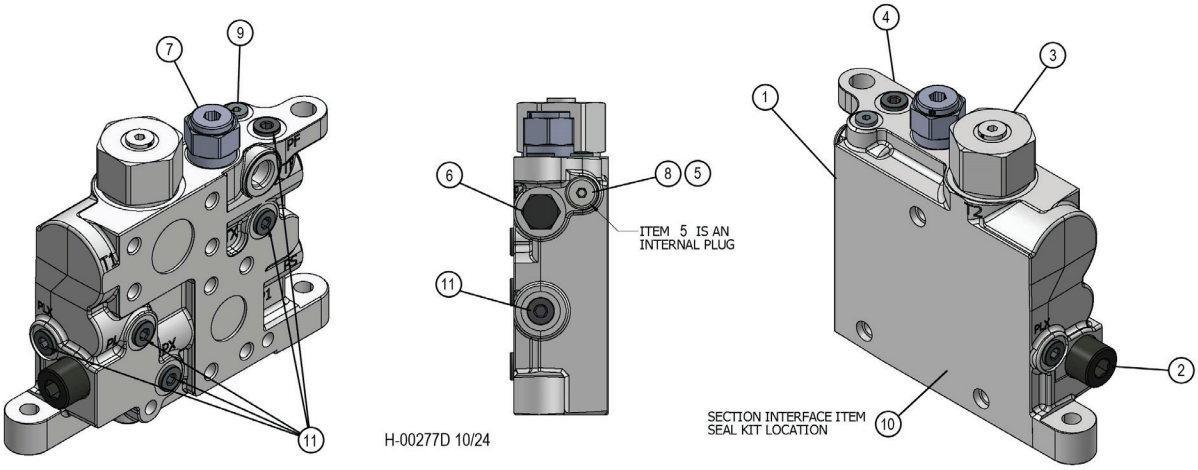


| Item | Part # | Description | Qty. |
|---|---|---|---|
| 1 | 20106626 | VA450 INLET | 1 |
| 2 | 19217256 | PLC182-330-20 RELIEF MAIN R/V 330 BAR 4785 PSI | 1 |
| 3 | 20106606 | MF5 COUNTER PRESSURE VALVE 6764842 | 1 |
| 4 | 20110560 | VA450 BLANK INLET SECTION LSB450 | 1 |
| 5 | 20110554 | TP INTERNAL PLUG | 1 |
| 6 | 19220867 | CHECK CART C08-2 STD 3PSI | 1 |
| 7 | 20090649 | VA300/450 REDUCING VALVE R35 | 1 |
| 8 | 20110562 | PLUG 14MM X 1.5 METRIC | 1 |
| 9 | 19213753 | HOLLOW HEX PLUG SAE-ORB | 1 |
| 10 | 54880 | SEAL KIT VA300 & VA450 INTERSECT | 1 |
| 11 | 19215123 | PLUG #6 SAE HOLLOW HEX | 6 |

# H200-00232 - WS450 MAIN VALVE SECTION - STICK BOOM (SQUIRT ARM DANGLE PROCESSOR)

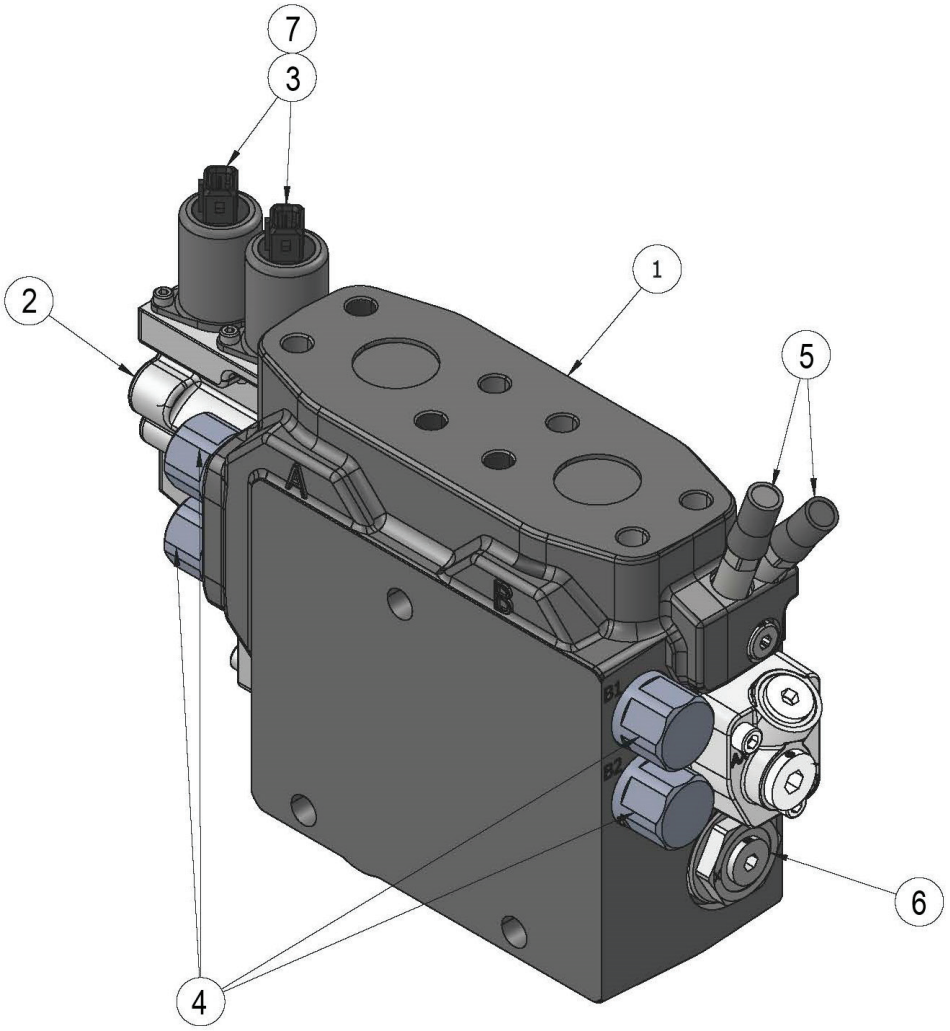


H-00257D 09/24

| Item | Part # | Description | Qty. |
|---|---|---|---|
| 1 | 20108694 | VA450 BUILD PROGRAM WORK SECTION | 1 |
| 2 | 20099915 | KIT EC-CAP COMPLETE U VA450/VA300 ENDCAP W/O STROKE LIMITER | 1 |
| 3 | 699190 | 24 VDC SOLENOID AMP W ORIFICE 0.8 MM | 2 |
| 4 | 56161 | 320 BAR PORT RELIEF VALVE 6760610 | 4 |
| 5 | 699170 | SUPPLY REDUCER MR (K220/L90) W/O TAMPERPROOF CAP | 2 |
| 6 | 55734 | VA450 A AND B SIDE EK COMPENSATOR KIT 6764825 | 1 |
| 7 | 699180 | 1.00MM PILOT ORIFICE 376269610 | 2 |
| * | 20099958 | VA450 STICK 4AA SPOOL | 1 |
| * | 699200 | KIT SPRING PACK 6.5-19 BAR STD VA450 6764840 | 1 |
| * | 20107604 | KIT B-SIDE COVER, U/U VA450/VA300 CAP B W/ #8 SAE PLUG | 1 |

*** MEANS NOT SHOWN)**

# H200-00233 - WS450 MAIN VALVE SECTION - MAIN BOOM (SQUIRT ARM DANGLE PROCESSOR)

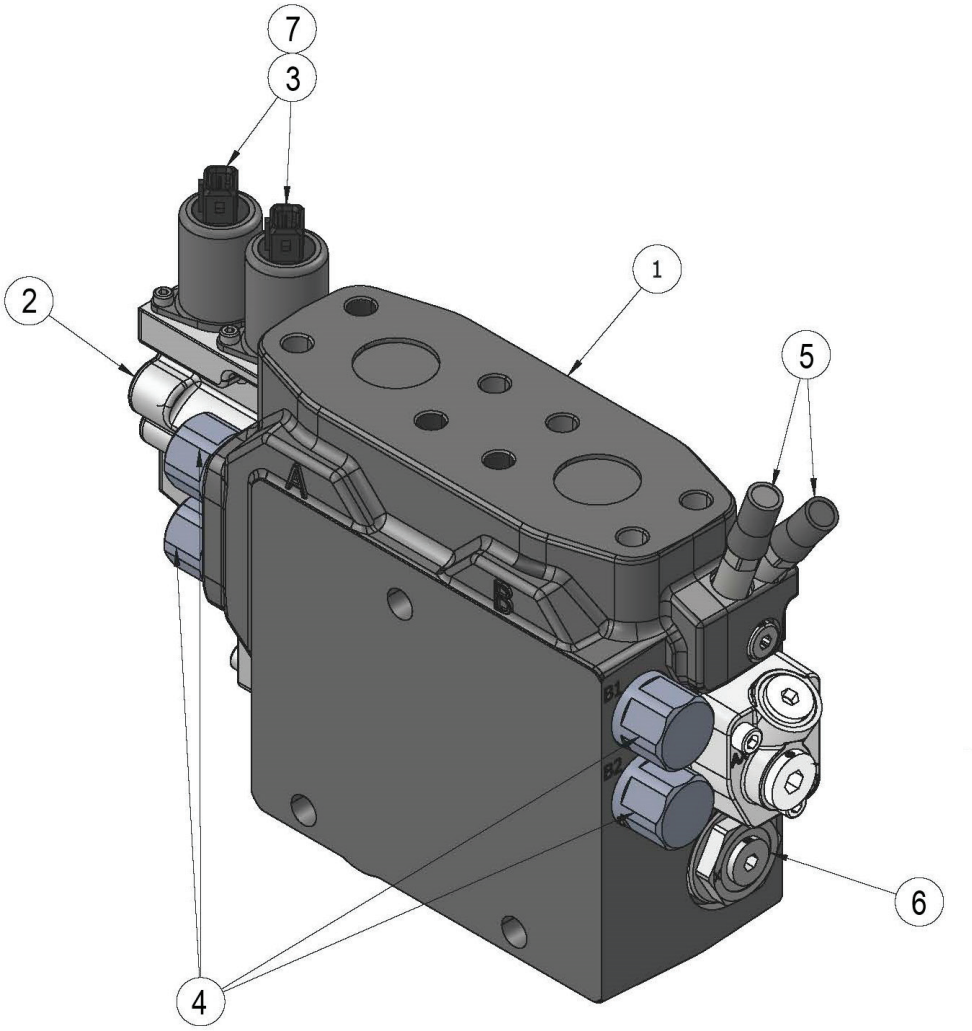


H-00257D 09/24

| Item | Part # | Description | Qty. |
|---|---|---|---|
| 1 | 20108696 | VA450 BUILD PROGRAM WORK SECTION | 1 |
| 2 | 20099915 | KIT EC-CAP COMPLETE U VA450/VA300 ENDCAP W/O STROKE LIMITER | 1 |
| 3 | 699190 | 24 VDC SOLENOID AMP W ORIFICE 0.8 MM | 2 |
| 4 | 56161 | 320 BAR PORT RELIEF VALVE 6760610 | 4 |
| 5 | 699170 | SUPPLY REDUCER MR (K220/L90) W/O TAMPERPROOF CAP | 2 |
| 6 | 55734 | VA450 A AND B SIDE EK COMPENSATOR KIT 6764825 | 1 |
| 7 | 699180 | 1.00MM PILOT ORIFICE 376269610 | 2 |
| * | 57318 | VA450 MAIN BOOM 4AB SPOOL | 1 |
| * | 699200 | KIT SPRING PACK 6.5-19 BAR STD VA450 6764840 | 1 |
| * | 20107604 | KIT B-SIDE COVER, U/U VA450/VA300 CAP B W/ #8 SAE PLUG | 1 |

*** MEANS NOT SHOWN)**

# H200-00234 - WS450 MAIN VALVE SECTION - PROCESSOR / SAW (SQUIRT ARM DANGLE PROCESSOR)

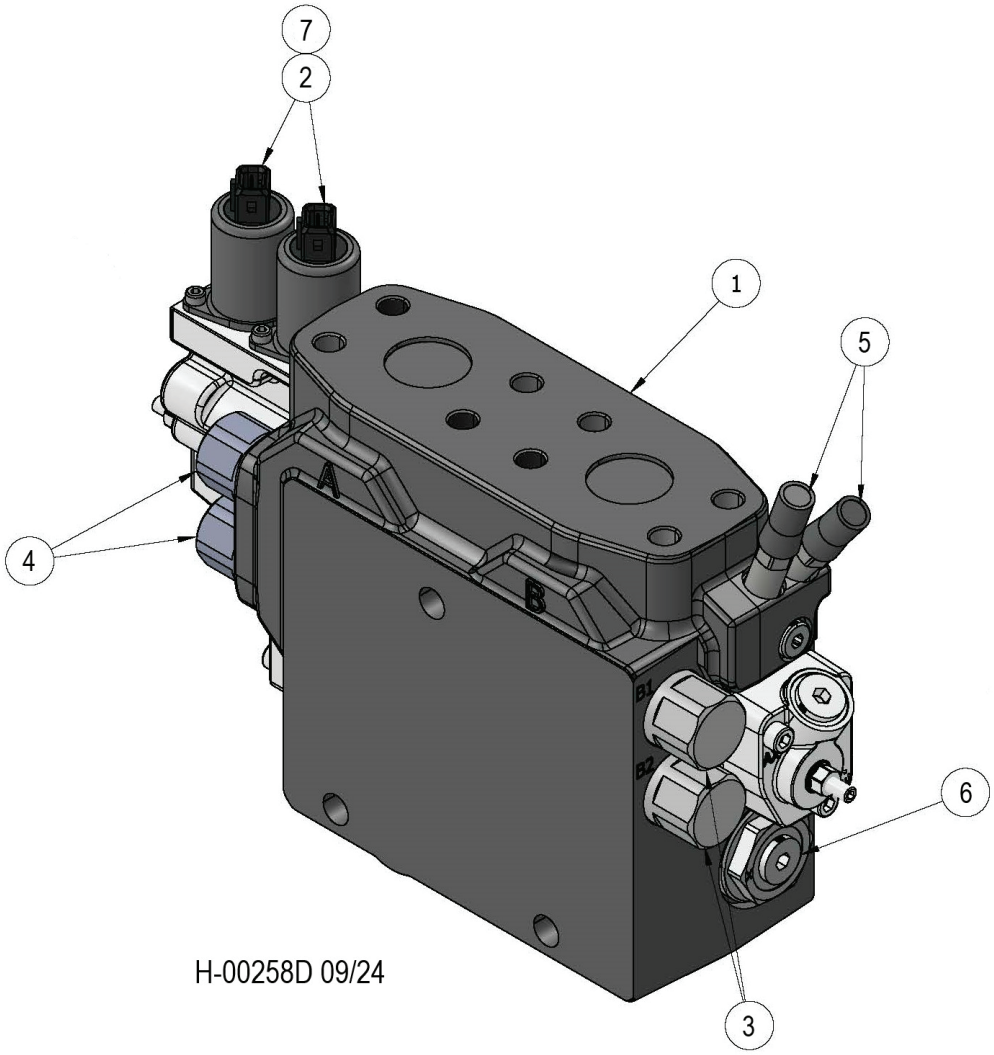


| Item | Part # | Description | Qty. |
|---|---|---|---|
| 1 | 20108702 | VA450 BUILD PROGRAM WORK SECTION | 1 |
| * | 20099963 | SPOOL 4AE VA450 SAW SPOOL | 1 |
| * | 699200 | KIT SPRING PACK 6.5-19 BAR STD VA450 6764840 | 1 |
| * | 53385 | KIT B-SIDE COVER U/M6 VA450/VA300 W/ STROKE LIMITER | 1 |
| * | 20099916 | KIT EC-CAP COMPLETE U/M6 VA450/VA300 END CAP A W/ STROKE LIMITER | 1 |
| 6 | 699190 | 24 VDC SOLENOID AMP W ORIFICE 0.8 MM | 2 |
| 7 | 56473 | PLC185-380-20 A014 KSERI 6760874 | 2 |
| 8 | 56472 | 330 BAR PORT RELIEF VALVE | 2 |
| 9 | 699170 | SUPPLY REDUCER MR (K220/L90) W/O TAMPERPROOF CAP | 2 |
| 10 | 55734 | VA450 A AND B SIDE EK COMPENSATOR KIT 6764825 | 1 |
| 11 | 699180 | 1.00MM PILOT ORIFICE 376269610 | 2 |

***MEANS NOT SHOWN**

# H200-00236 - WS300 MAIN VALVE SECTION - SQUIRT BOOM (SQUIRT ARM DANGLE PROCESSOR)

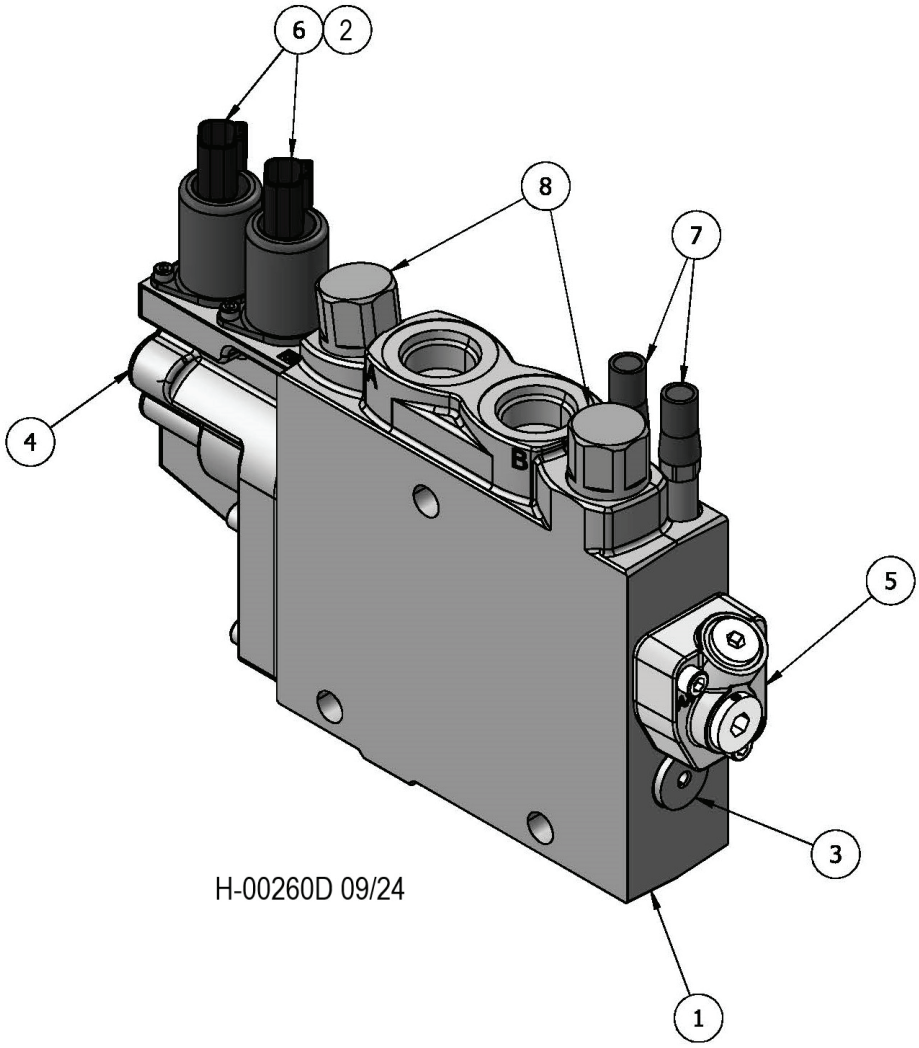


| Item | Part # | Description | Qty. |
|---|---|---|---|
| 1 | 20108835 | VA300 BUILD PROGRAM WORK SECTION | 1 |
| 2 | 699180 | 1.00MM PILOT ORIFICE 376269610 | 2 |
| 3 | 20106632 | K1 COMP KIT VA300 | 1 |
| 4 | 20099915 | KIT EC-CAP COMPLETE U VA450/VA300 ENDCAP W/O STROKE LIMITER | 1 |
| 5 | 20107604 | KIT B-SIDE COVER, U/U VA450/VA300 CAP B W/ #8 SAE PLUG | 2 |
| 6 | 696080 | 24VDC SOLENOID PILOT DEUSTCH W ORIFICE 0.8 MM | 2 |
| 7 | 699170 | SUPPLY REDUCER MR (K220/L90) W/O TAMPERPROOF CAP | 2 |
| 8 | 19217271 | PCL185-250-20 RELIEF 9120029915 | 2 |
| * | 20102517 | VA300 SQUIRT 3AJ SPOOL | 1 |
| * | 20099909 | KIT SPRING PACK 6 5-19 BAR STD VA450/VA300 SPRING PACK | 1 |

# H200-00236 - WS300 MAIN VALVE SECTION - ROTATE
# (SQUIRT ARM DANGLE PROCESSOR)

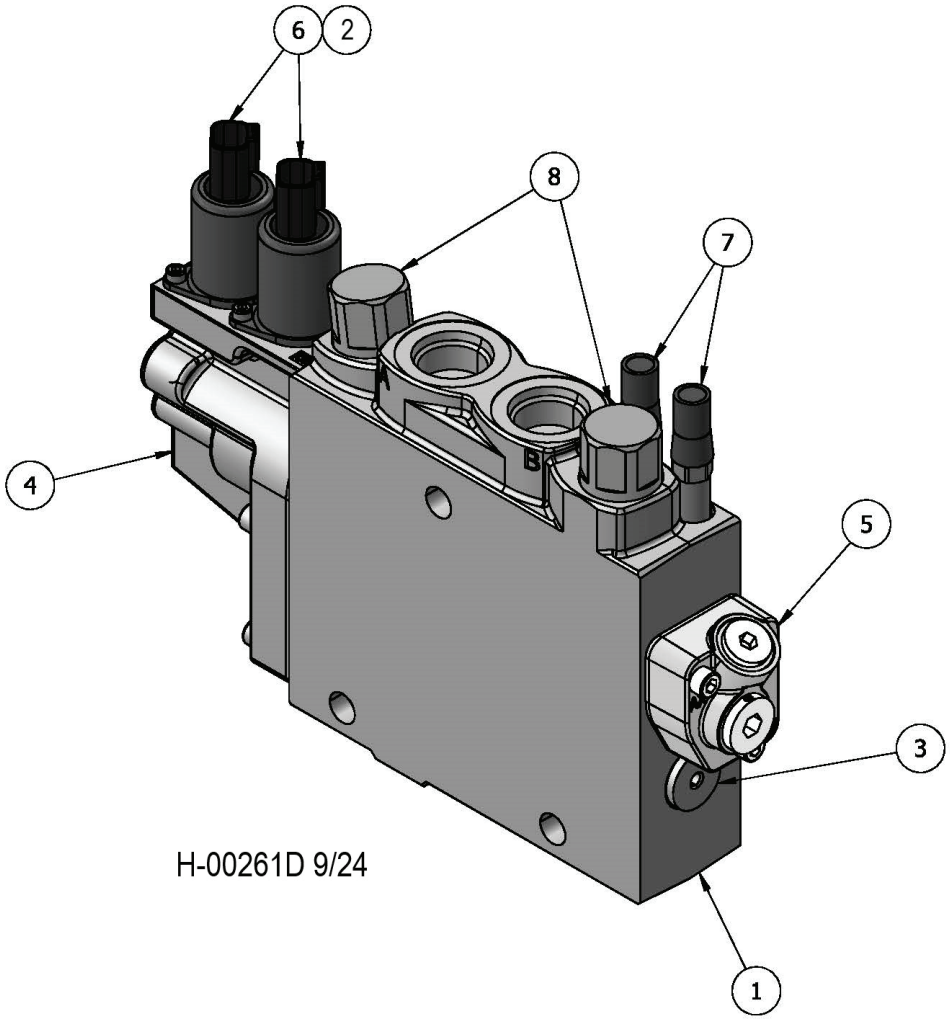


| Item | Part # | Description | Qty. |
|---|---|---|---|
| 1 | 20108822 | VA300 BUILD PROGRAM WORK SECTION | 1 |
| 2 | 699180 | 1.00MM PILOT ORIFICE 376269610 | 2 |
| 3 | 20106632 | K1 COMP KIT VA300 | 1 |
| 4 | 20099915 | KIT EC-CAP COMPLETE U VA450/VA300 ENDCAP W/O STROKE LIMITER | 1 |
| 5 | 20107604 | KIT B-SIDE COVER, U/U VA450/VA300 CAP B W/ #8 SAE PLUG | 1 |
| 6 | 696080 | 24VDC SOLENOID PILOT DEUSTCH W ORIFICE 0.8 MM | 2 |
| 7 | 699170 | SUPPLY REDUCER MR (K220/L90) W/O TAMPERPROOF CAP | 2 |
| 8 | 19217271 | PCL185-250-20 RELIEF 9120029915 | 2 |
| * | 20101857 | VA300 GRAPPLE ROTATE/BLAD 3AX SPOOL | 1 |
| * | 20099909 | KIT SPRING PACK 6 5-19 BAR STD VA450/VA300 SPRING PACK | 1 |

# H200-00237 - WS300 MAIN VALVE SECTION - CAB LEVEL
# (SQUIRT ARM DANGLE PROCESSOR)

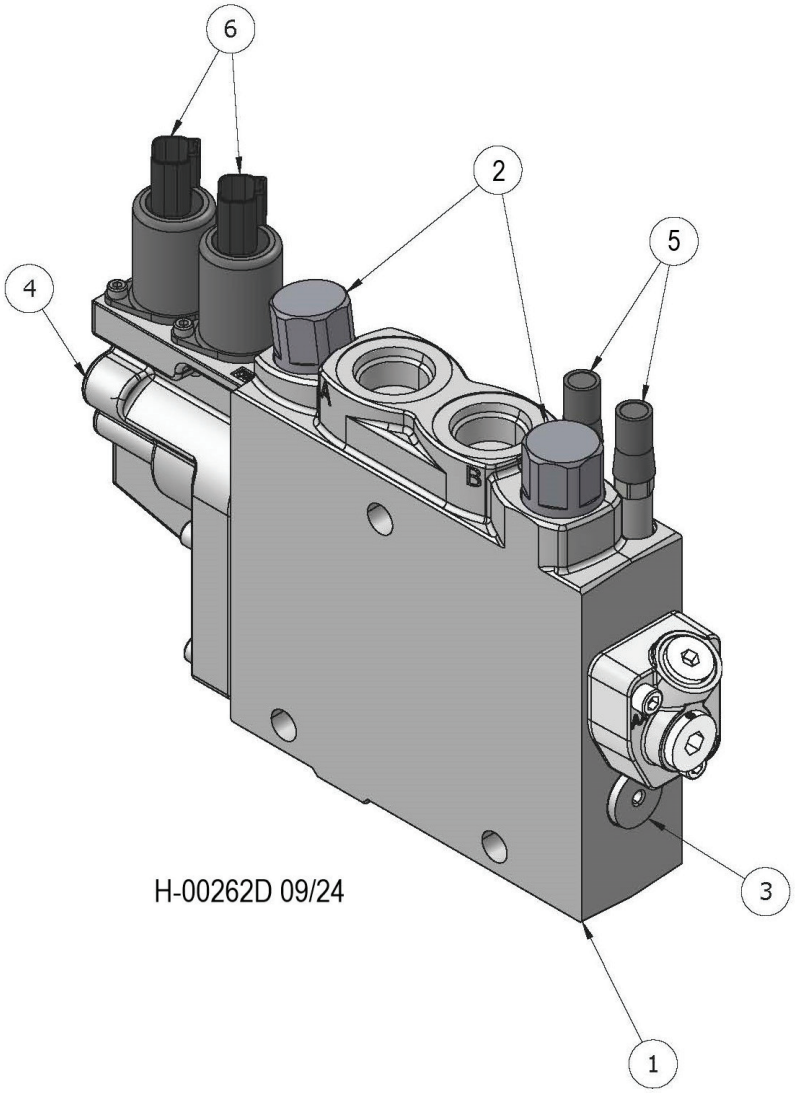


| Item | Part # | Description | Qty. |
|---|---|---|---|
| 1 | 20108705 | VA300 BUILD PROGRAM WORK SECTION | 1 |
| 2 | 19217272 | 280 BAR WP RELIEF 9120029916 | 2 |
| 3 | 20106632 | K1 COMP KIT VA300 | 1 |
| 4 | 20099915 | KIT EC-CAP COMPLETE U VA450/VA300 ENDCAP W/O STROKE LIMITER | 1 |
| 5 | 699170 | SUPPLY REDUCER MR (K220/L90) W/O TAMPERPROOF CAP | 2 |
| 6 | 696080 | 24VDC SOLENOID PILOT DEUSTCH W ORIFICE 0.8 MM | 2 |
| * | 20099965 | VA300 LEVEL 3AW SPOOL | 1 |
| * | 20099909 | KIT SPRING PACK 6 5-19 BAR STD VA450/VA300 SPRING PACK | 1 |
| * | 699180 | 1.00MM PILOT ORIFICE 376269610 | 2 |

*** MEANS NOT SHOWN)**

# H200-00238 - WS300 MAIN VALVE SECTION - OUTLET (SQUIRT ARM DANGLE PROCESSOR)

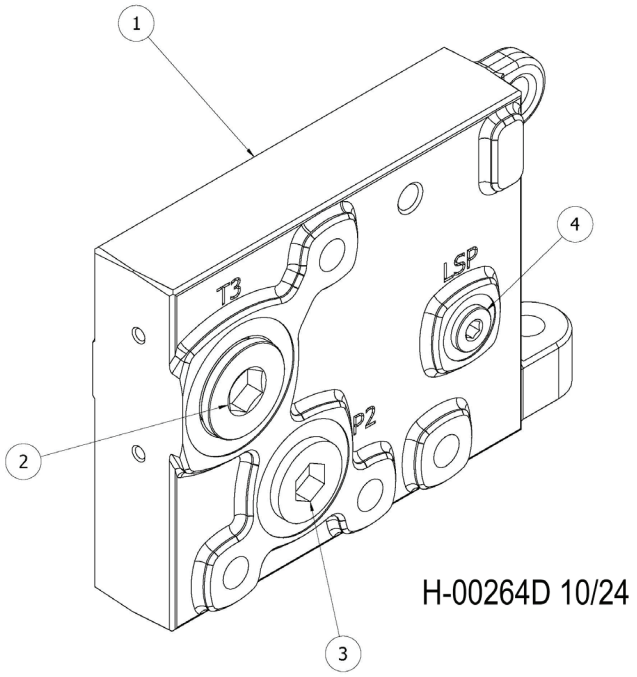


| Item | Part # | Description | Qty. |
|---|---|---|---|
| 1 | 20110351 | VA300/450 BUILD PROGRAM END SECTION | 1 |
| 2 | 19208810 | HOLLOW HEX PLUG SAE-ORB | 1 |
| 3 | 19207916 | HOLLOW HEX PLUG | 1 |
| 4 | 19215123 | PLUG #6 SAE HOLLOW HEX | 1 |

# H200-00230 - BOOM PLATE HYD. FITTINGS - DANGLE PROCESSOR ATTACHMENTS (W450/W300 VALVE)

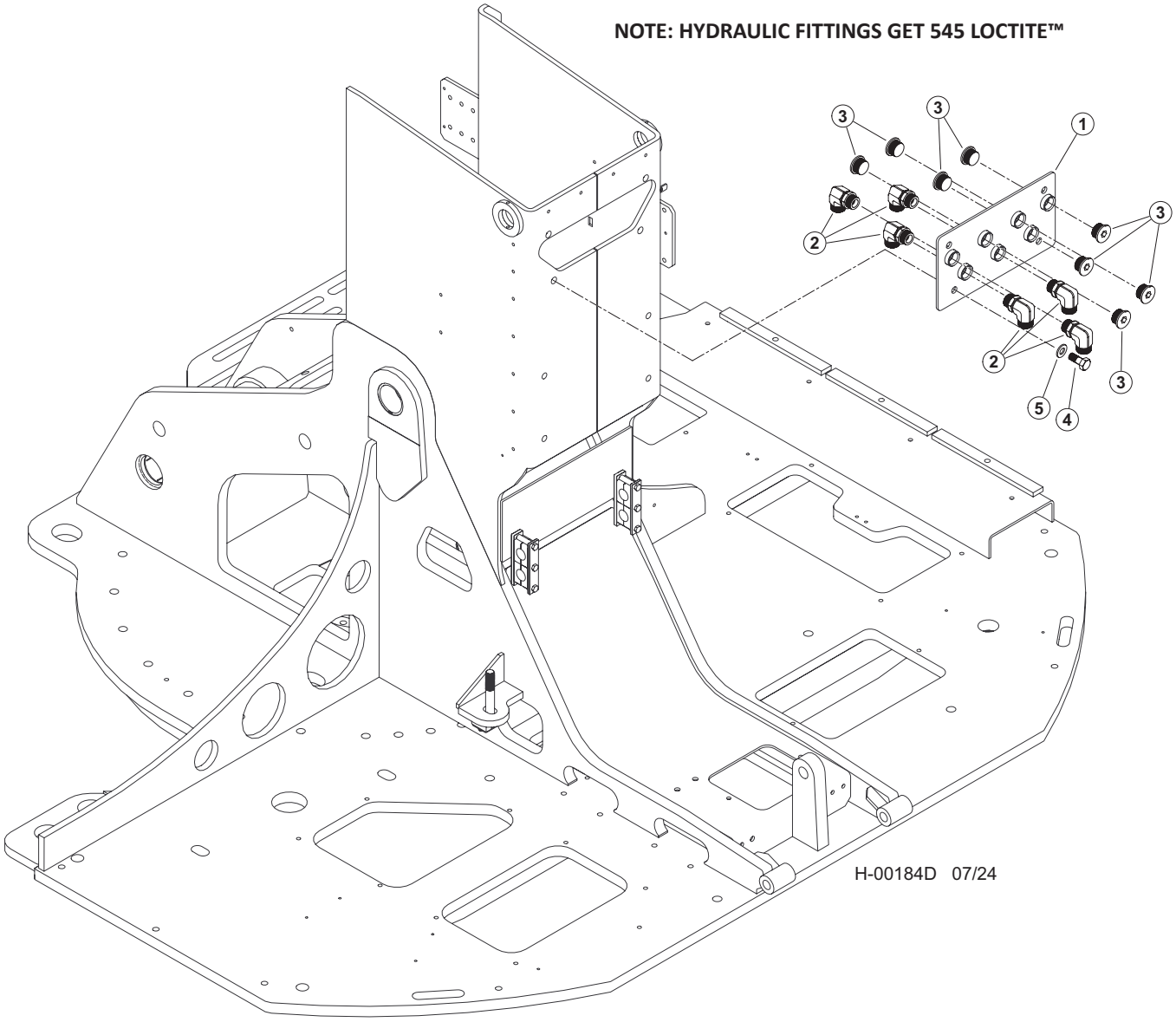


| Item | Part # | Description | Qty. |
|---|---|---|---|
| | 65882 | KIT, HYD FITTING, BH, DISCSAW BASIC | 1 |
| 1 | 60278 | WELDMENT, BUNCHER BOOM BH PLATE | 1 |
| 2 | 15528 | ELBOW, 90 - FF1868T-1616S | 6 |
| 3 | 19847 | PLUG - 6408-HHP-16 | 8 |
| 4 | 10739 | BOLT - .5” X 1.5” | 4 |
| 5 | 10804 | WASHER, FLAT - .5” | 4 |

# H100-00340 - CAB LEVELING HYD. HOSE LOWER CONNECTIONS
# ROTARY MAINFOLD TO CYLINDERS

**NOTE: HYDRAULIC FITTINGS GET 545 LOCTITE™**

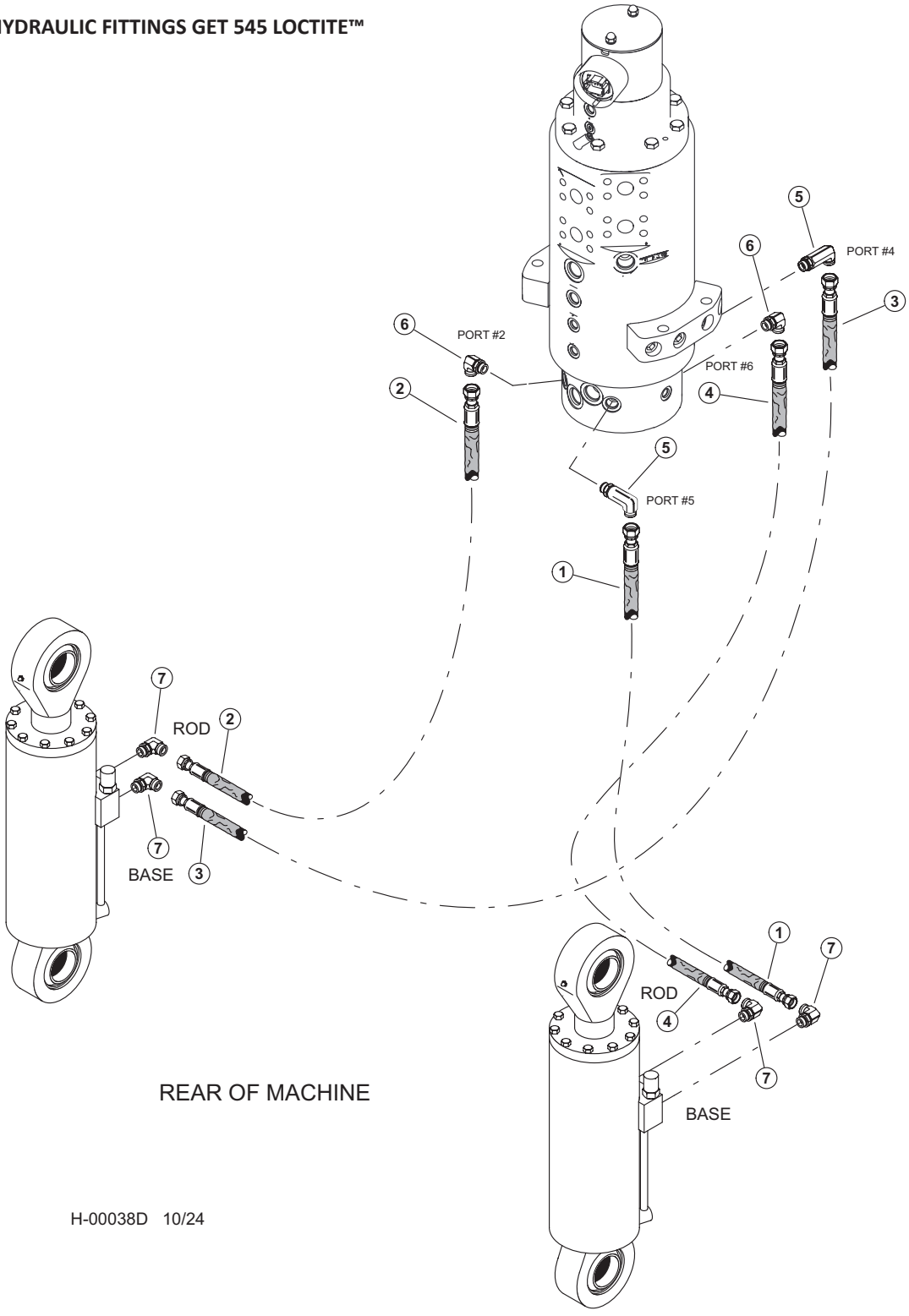


H-00038D 10/24

# H100-00340 - CAB LEVELING HYD. HOSE LOWER CONNECTIONS ROTARY MAINFOLD TO CYLINDERS

| Item | Part # | Description | Qty. |
|---|---|---|---|
| | **57457** | **KIT, FITTING - TRACK LEVELING** | 1 |
| | **57947** | **KIT, FITTING TRACK LEVEL** | 1 |
| 1 | 65892 - (65891 - KIT) | HOSE, HYD, 787TC30 08-08OS-08OS **- (RM #5 TO RH CYL ROD)** | 1 |
| 2 | 65895 - (65891 - KIT) | HOSE, HYD, 787TC44 08-08OS-08OS **- (RM #2 TO RH CYL BASE)** | 1 |
| 3 | 65894 - (65891 - KIT) | HOSE, HYD, 787TC41.5 08-08OS-08OS **- (RM #4 TO LH CYL ROD)** | 1 |
| 4 | 65893 - (65891 - KIT) | HOSE, HYD, 787TC40 08-08OS-08OS **- (RM #6 TO LH CYL BASE)** | 1 |
| 5 | 57445 | FITTING, 8 CC5OLO-S | 2 |
| 6 | 16360 | ELBOW, 90 - FF1868T-0808S | 1 |
| 7 | 15154 | ELBOW, 90 - FF1868T-0810S | 1 |

# H100-00350 - LEVELING CARBODY HOSE & FITTINGS - (RM. TO BULKHEAD & RH TRACK MOTOR FITTINGS)

**NOTE: HYDRAULIC FITTINGS GET 545 LOCTITE™**

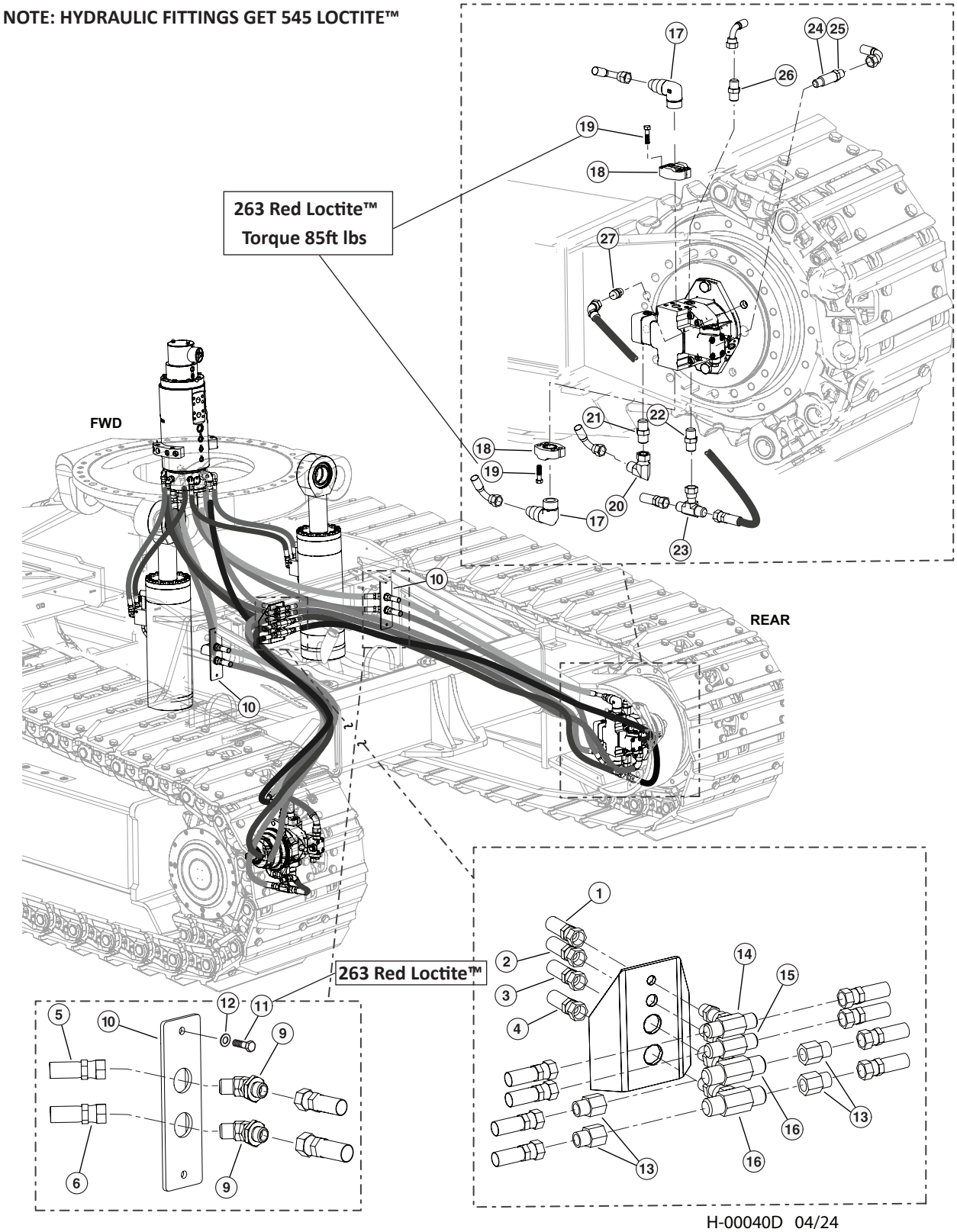


H-00040D 04/24

# H100-00350 - LEVELING CARBODY HOSE & FITTINGS - (RM. TO BULKHEAD & RH TRACK MOTOR FITTINGS)

| Item | Part # | Description | Qty. |
|---|---|---|---|
| | **57458** | **KIT, FITTING - TRACK TRUNK** | 1 |
| | **57457** | **KIT, FITTING - TRACK LEVELING** | 1 |
| 1 | 55306 - (KIT) | HOSE ASSY - 387TC50 04-04OS-04OS-W - (SHIFT - RM #3 TO BULKHEAD) | 1 |
| 2 | 55306 - (KIT) | HOSE ASSY - 387TC51 06-06OS-06OS-W - (BRAKE - RM #1 TO BULKHEAD) | 1 |
| 3 | 55306 - (KIT) | HOSE ASSY - 187TC51 12-12OS-12OS-W - (FLUSH - RM #7 TO BULKHEAD) | 1 |
| 4 | 55306 - (KIT) | HOSE ASSY - 187TC58 12-12OS-12OS-W - (CASE - RM #1 TO BULKHEAD) | 1 |
| 5 | 55306 - (KIT) | HOSE ASSY - 797TC60 16-16OS-16OS-SW - (DRIVE LINE - RM #11 TO TOP RH BULKHEAD) | 1 |
| 6 | 55306 - (KIT) | HOSE ASSY - 797TC60 16-16OS-16OS-SW - (DRIVE LINE - RM #9 TO BOTTOM RH BULKHEAD) | 1 |
| 9 | 54316 | ELBOW, BULKHEAD UNION 45DEG #16 | 2 |
| 10 | 60344 | PLATE, TRUNK - BH (TL) | 1 |
| 11 | 11707 | BOLT - .375” X 1” **263 RED LOCTITE™** | 2 |
| 12 | 15528 | WASHER, SAE FLAT - .375” | 2 |
| 13 | 18581 | CONNECTOR, REDUCER - ORS FF2281T-0812S | 4 |
| 14 | 52901 | TEE, BULKHEAD BRANCH - 4 | 1 |
| 15 | 52902 | TEE, BULKHEAD BRANCH - 6 | 1 |
| 16 | 53192 | FITTING, BULKHEAD BRANCH TEE- 12 WJLO-WL | 2 |
| 17 | 15228 | ELBOW, 90 - FF1868T-1616S | 4 |
| 18 | 58359 | CONNECTOR,FLANGE PAD-W48-16-16U-M12 BLK | 4 |
| 19 | 1139657 | BOLT, M12-1.75 X 45MM L 10MM HEX DRIVE **263 RED LOCTITE™ (TORQUE 85FT LBS)** | 8 |
| 20 | 15145 | ELBOW, 90 SWIVEL - FF2098T-0404S | 2 |
| 21 | 53157 | FITTING, CONNECTOR - #4 ORF - 14MM | 2 |
| 22 | 54795 | CONNECTOR, STR ORIFICED .04” TRACK MOTOR | 2 |
| 23 | 52900 | SWIVEL, NUT BRANCH TEE #6 | 2 |
| 24 | 53651 | FITTING, FLUSHING ORIFICE - TRACK MOTOR | 2 |
| 25 | 15117 | CONNECTOR, STR - FF1852T-0808S | 2 |
| 26 | 52439 | CONNECTOR, MALE ISO 6149 | 2 |
| 27 | 53124 | FITTING, MALE CONNECTOR ISO 6149 | |

# H100-00360 - LEVELING CARBODY HOSE & FITTINGS - (RM. TO BULKHEAD & LH TRACK MOTOR FITTINGS)

**NOTE: HYDRAULIC FITTINGS GET 545 LOCTITE™**

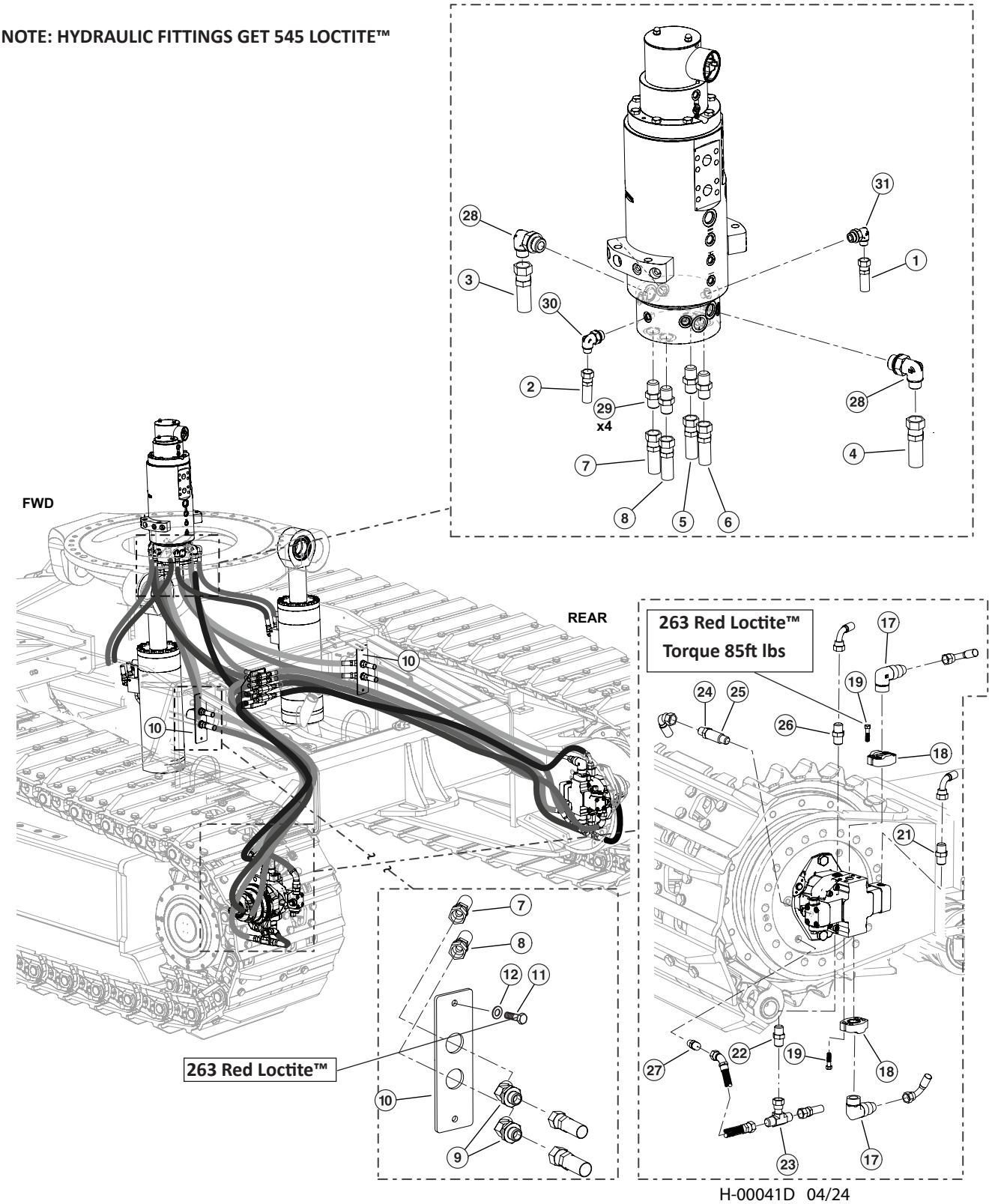


H-00041D 04/24

# H100-00360 - LEVELING CARBODY HOSE & FITTINGS - (RM. TO BULKHEAD & LH TRACK MOTOR FITTINGS)

| Item | Part # | Description | Qty. |
|---|---|---|---|
| | **57458** | **KIT, FITTING - TRACK TRUNK** | 1 |
| | **57457** | **KIT, FITTING - TRACK LEVELING** | 1 |
| 1 | 55306 - (KIT) | HOSE ASSY - 387TC50 04-04OS-04OS-W - (SHIFT - RM #3 TO BULKHEAD) | 1 |
| 2 | 55306 - (KIT) | HOSE ASSY - 387TC51 06-06OS-06OS-W - (BRAKE - RM #1 TO BULKHEAD) | 1 |
| 3 | 55306 - (KIT) | HOSE ASSY - 187TC51 12-12OS-12OS-W - (FLUSH - RM #7 TO BULKHEAD) | 1 |
| 4 | 55306 - (KIT) | HOSE ASSY - 187TC58 12-12OS-12OS-W - (CASE - RM #1 TO BULKHEAD) | 1 |
| 5 | 55306 - (KIT) | HOSE ASSY - 797TC60 16-16OS-16OS-SW - (DRIVE LINE - RM #11 TO TOP RH BULKHEAD) | 1 |
| 6 | 55306 - (KIT) | HOSE ASSY - 797TC60 16-16OS-16OS-SW - (DRIVE LINE - RM #9 TO BOTTOM RH BULKHEAD) | 1 |
| 7 | 55306 - (KIT) | HOSE ASSY - 797TC62 16-16OS-16OS-SW - (DRIVE LINE - RM #12 TO TOP LH BULKHEAD) | 1 |
| 8 | 55306 - (KIT) | HOSE ASSY - 797TC60 16-16OS-16OS-SW - (DRIVE LINE - RM #10 TO BOTTOM LH BULKHEAD) | 1 |
| 9 | 54316 | ELBOW, BULKHEAD UNION 45DEG #16 | 2 |
| 10 | 60344 | PLATE, TRUNK - BH (TL) | 1 |
| 11 | 11707 | BOLT - .375” X 1” **263 RED LOCTITE™ (TORQUE 85FT LBS)** | 2 |
| 12 | 15528 | WASHER, SAE FLAT - .375” | 2 |
| 17 | 15228 | ELBOW, 90 - FF1868T-1616S | 2 |
| 18 | 58359 | CONNECTOR,FLANGE PAD-W48-16-16U-M12 BLK | 2 |
| 19 | 1139657 | BOLT, M12-1.75 X 45MM L 10MM HEX DRIVE **263 RED LOCTITE™ (TORQUE 90FT LBS)** | 8 |
| 21 | 53157 | FITTING, CONNECTOR - #4 ORF - 14MM | 1 |
| 22 | 54795 | CONNECTOR, STR ORIFICED .04” TRACK MOTOR | 1 |
| 23 | 52900 | SWIVEL, NUT BRANCH TEE #6 | 1 |
| 24 | 15117 | CONNECTOR, STR - FF1852T-0808S | 1 |
| 25 | 53651 | FITTING, FLUSHING ORIFICE - TRACK MOTOR | 1 |
| 26 | 52439 | CONNECTOR, MALE ISO 6149 | 1 |
| 27 | 53124 | FITTING, MALE CONNECTOR ISO 6149 | 1 |
| 28 | 17688 | ELBOW, 90 - FF1868T-1212S | 2 |
| 29 | 15225 | CONNECTOR, STR - FF1852T-1616S | 4 |
| 30 | 16296 | ELBOW, 90 - FF1868T-0606S | 1 |
| 31 | 15133 | ELBOW, 90 - FF1868T-0406S | 1 |

# H100-00370 - LEVELING CARBODY HOSE & FITTINGS - (FUEL SYSTEM)

**NOTE: HYDRAULIC FITTINGS GET 545 LOCTITE™**

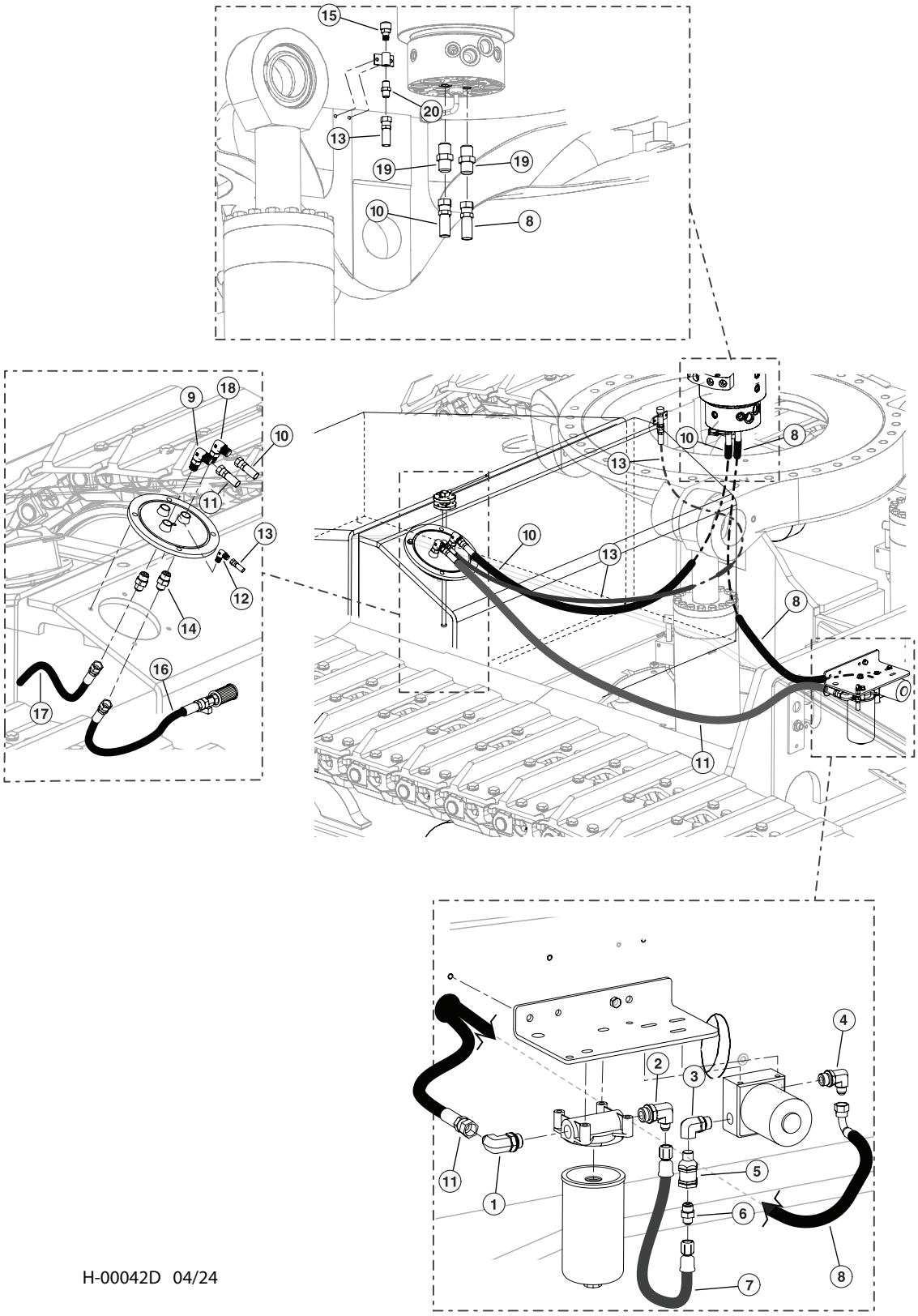


H-00042D 04/24

# H100-00370 - LEVELING CARBODY HOSE & FITTINGS - (FUEL SYSTEM)

| Item | Part # | Description | Qty. |
|---|---|---|---|
| | 57457 | KIT, FITTING - TRACK LEVELING | 1 |
| 1 | 18109 | ELBOW, 90 - 6801-8-10 | 1 |
| 2 | 53073 | ELBOW, 90 6-JIC X 10-ORB) | 1 |
| 3 | 57824 | FITTING, ELBOW FEMALE - RAPTOR FUEL PUMP | 1 |
| 4 | 15480 | ELBOW, 90 - 6801-6 | 1 |
| 5 | 15652 | VALVE, CHECK - HYDRAULIC/FUEL | 1 |
| 6 | 16009 | FITTING, 6 FTX-S PIPE-JIC | 1 |
| 7 | 58064 | HOSE, FUEL RAPTOR PUMP TRACK | 1 |
| 8 | 55306 - (KIT) | HOSE ASSY - 221FR70 06-06JS-06J9-W - (FUEL PUMP OUT TO RM. FS) | 1 |
| 9 | 15481 | ELBOW, 90 - 6801-8 | 1 |
| 10 | 55306 - (KIT) | HOSE ASSY - 221FR78 06-06JS-06JS-W - (RM. FR TO FUEL TANK - RETURN) | 1 |
| 11 | 55306 - (KIT) | HOSE ASSY - 221FR70 08-08JS-08JS-W - (FUEL SUPPLY TO FILTER IN) | 1 |
| 12 | 15505 | ELBOW, 90 4-4 CLO-S | 1 |
| 13 | 55306 - (KIT) | HOSE ASSY - 387TC75 04-04OS-04OS-W - (FUEL VENT) | 1 |
| 14 | 15117 | CONNECTOR, STR - FF1852T-0808S | 2 |
| 15 | 54170 | VENT, FUEL TANK | 1 |
| 16 | 55306 - (KIT) | HOSE ASSY - 187TC42 08-08OS-08MP - (FUEL PICKUP - IN TANK) | 1 |
| 17 | 55306 - (KIT) | HOSE ASSY - 187TC20 08-08OS-OPEN - (FUEL RETURN - IN TANK) | 1 |
| 18 | 53145 | FITTING, 6-8 C50X-S - JIC | 1 |
| 19 | 53887 | FITTING, FUEL - ROTARY MANIFOLD #6 JIC | 2 |
| 20 | 15131 | CONNECTOR, STR - FF2031T-0404S | 1 |

# H100-00380 - LEVELING CARBODY HOSE & FITTINGS - (LEVELING CYLINDER BASE & RM GREASE LINES)

**NOTE: HYDRAULIC FITTINGS GET 545 LOCTITE™**

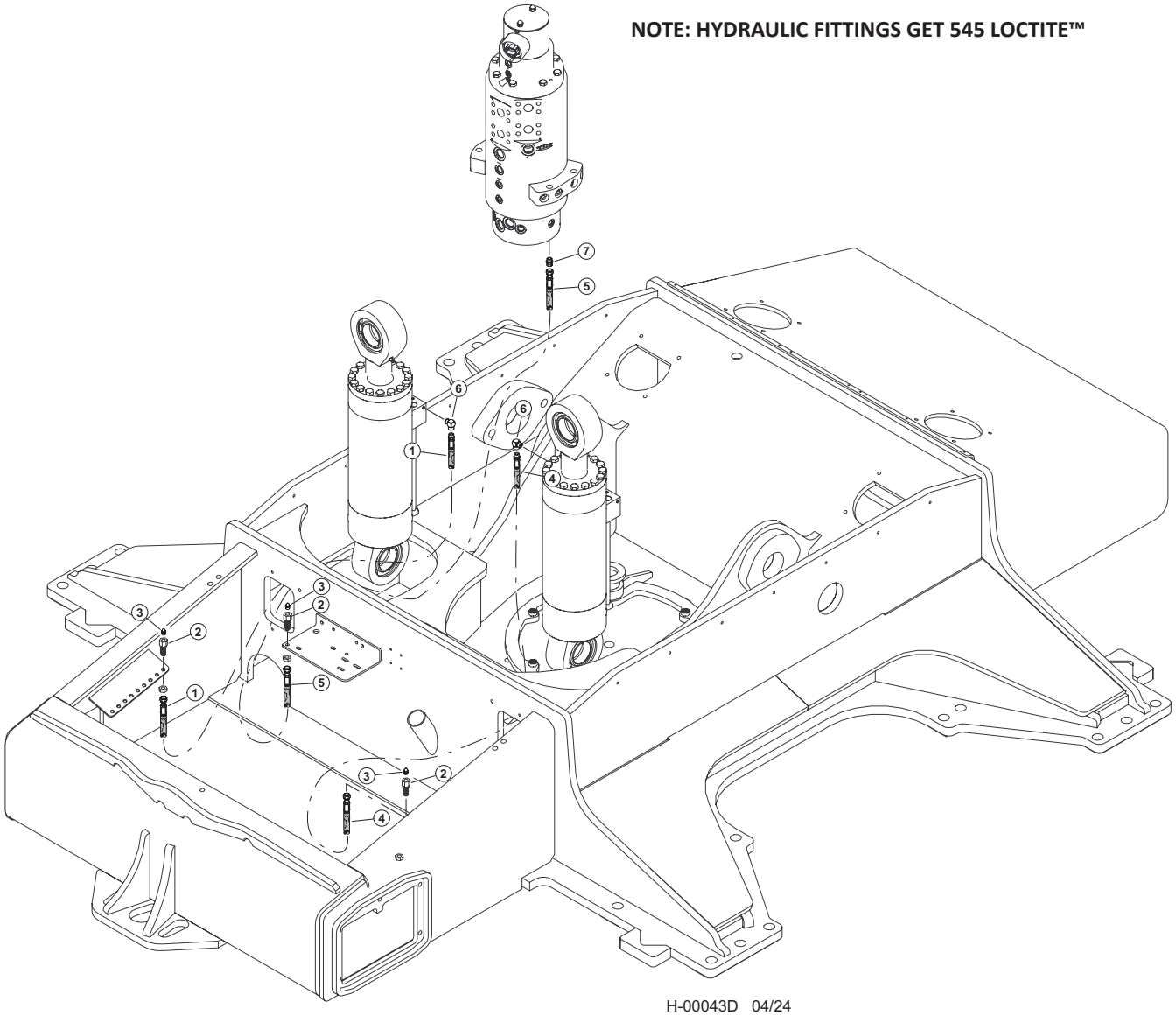

H-00043D 04/24

| Item | Part # | Description | Qty. |
|---|---|---|---|
| | **57457** | **KIT, FITTING - TRACK LEVELING** | 1 |
| 1 | 55306 - (KIT) | HOSE ASSY - HLBD72 02-02PS-04JS-W - (LEVEL - LEFT GREASE LINE) | 1 |
| 2 | 15658 | CONNECTOR, STR BULKHEAD - 2239-2-4S | 2 |
| 3 | 10704 | FITTING, GREASE - .125 NPT - STR | 2 |
| 4 | 55306 - (KIT) | HOSE ASSY - HLBD72 02-02PS-04JS-W - (LEVEL - RIGHT GREASE LINE) | 1 |
| 5 | 55306 - (KIT) | HOSE ASSY - HLBD76 02-04JS-04JS-W - (ROTARY MANIFOLD GREASE LINE) | 1 |
| 6 | 22281 | ELBOW, 1/8-27 NPTF(M), 1/8-17 NPTF(F),90 | 2 |
| 7 | 51887 | CONNECTOR, STR - (4F50X-S) | 1 |

# H100-00390 - HYDRAULIC FITTING KIT - (TRACK)

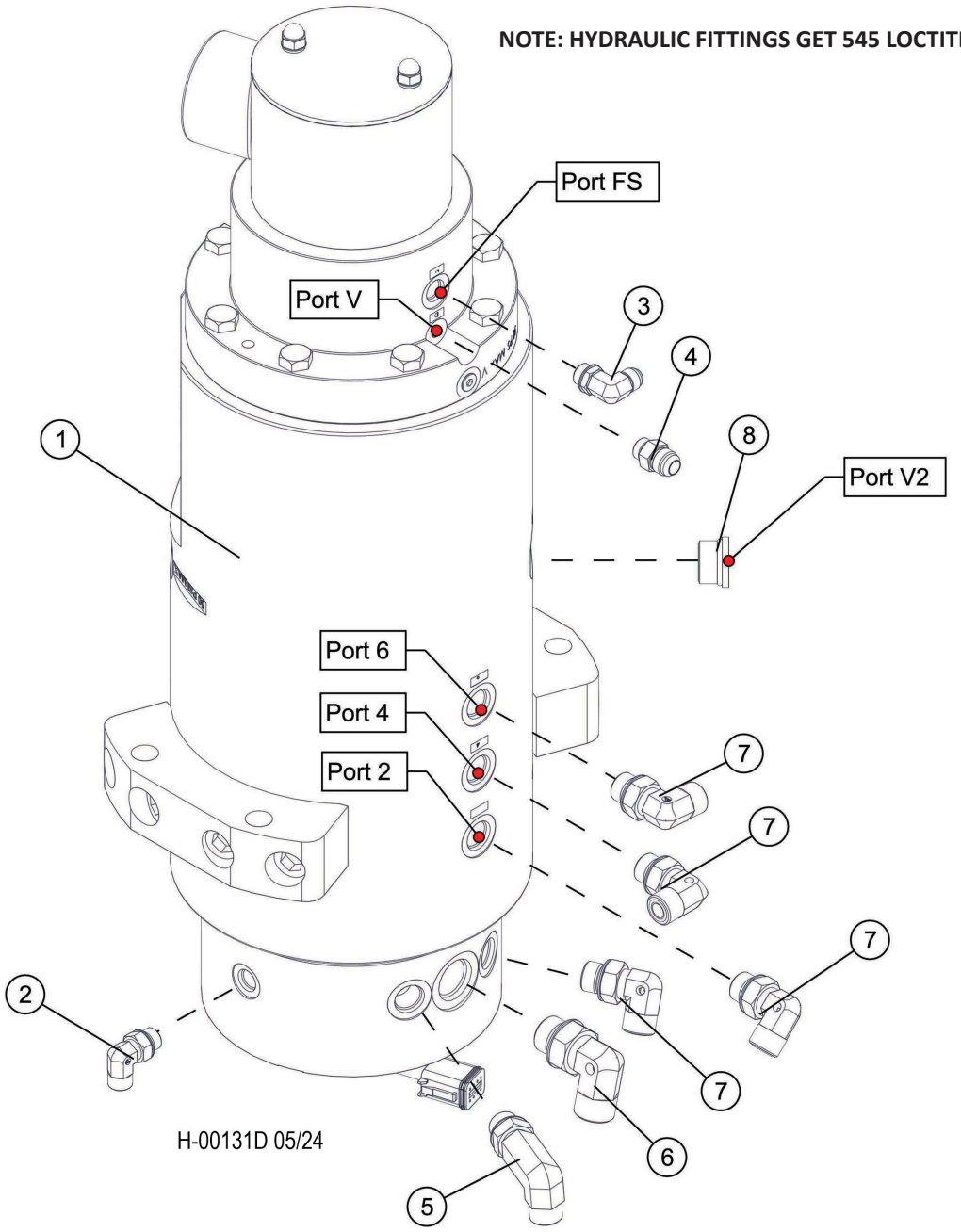


| Item | Part # | Description | Qty. |
|---|---|---|---|
| 1 | 650670 | MANIFOLD, ROTARY - 14 PORT TRACK (HYDRO | 1 |
| 2 | 15133 | ELBOW, 90 - FF1868T-0406S | 1 |
| 3 | 15480 | ELBOW, 90 - 6801-6 | 1 |
| 4 | 15487 | CONNECTOR, STR - 6400-6-4 | 1 |
| 5 | 57445 | FITTING, 8 CC5OLO-S | 1 |
| 6 | 17688 | ELBOW, 90 - FF1868T-1212S | 1 |
| 7 | 16360 | ELBOW, 90 - FF1868T-0808S | 4 |
| 8 | 15584 | PLUG - 6408-HHP-12 | 1 |

# H100-00400 - HYDRAULIC FITTING KIT - (TRACK)

**NOTE: HYDRAULIC FITTINGS GET 545 LOCTITE™**

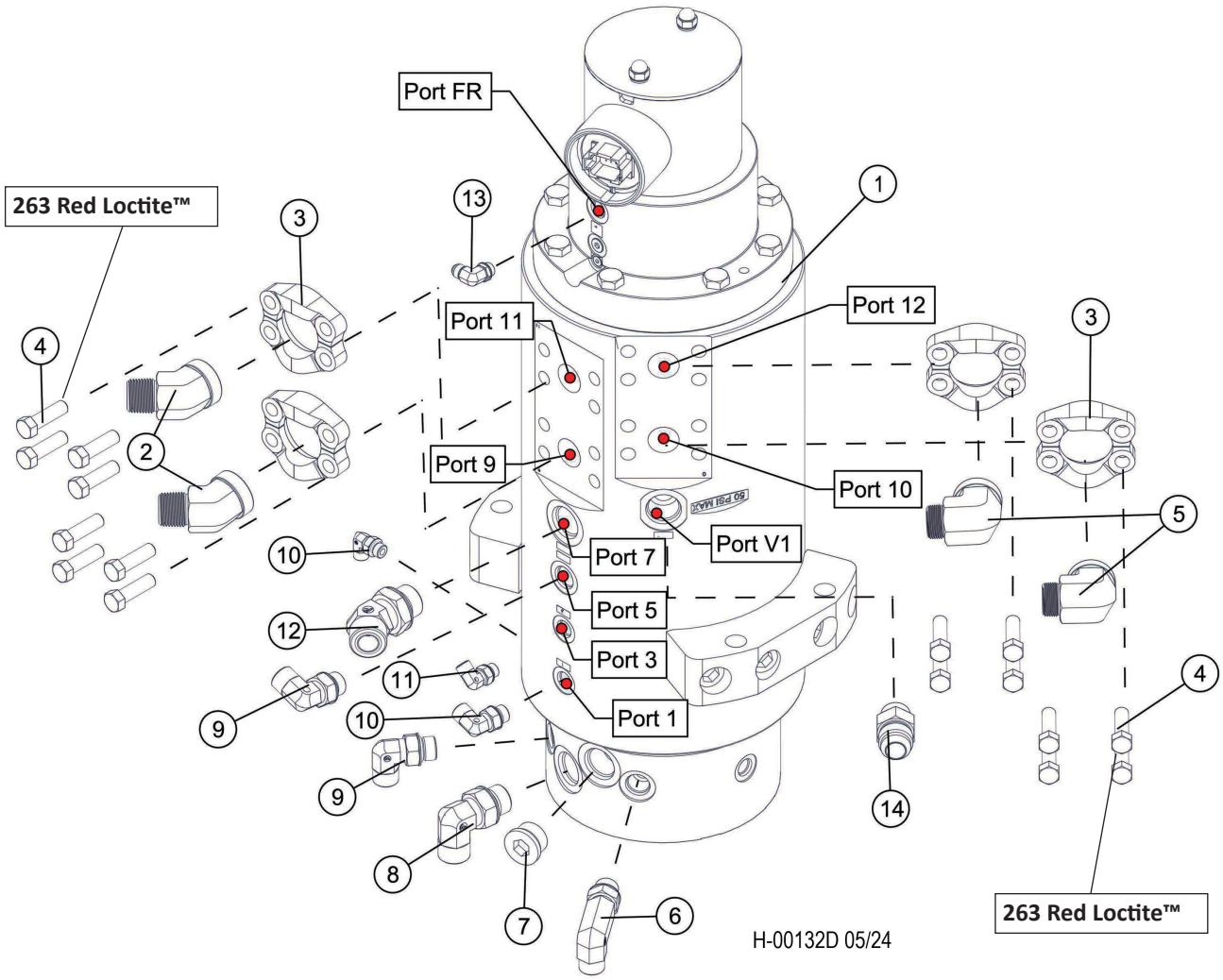

# H100-00400 - HYDRAULIC FITTING KIT - (TRACK)

| Item | Part # | Description | Qty. |
|---|---|---|---|
| 1 | 650670 | MANIFOLD, ROTARY - 14 PORT TRACK (HYDRO | 1 |
| 2 | 57459 | ADAPTOR, FLANGE 45DEG ORFS CODE 62 | 2 |
| 3 | 15113 | KIT, SPLIT FLANGE - 1” (CODE 62) | 4 |
| 4 | 15551 | BOLT - 12MM-1.75P X 40MM **263 RED LOCTITE™** | 16 |
| 5 | 20030 | ADAPTER, 90 FLANGE - 16 LOEQ2-S (C62) | 2 |
| 6 | 57445 | FITTING, 8 CC5OLO-S | 1 |
| 7 | 15584 | PLUG - 6408-HHP-12 | 1 |
| 8 | 17688 | ELBOW, 90 - FF1868T-1212S | 1 |
| 9 | 16360 | ELBOW, 90 - FF1868T-0808S | 2 |
| 10 | 16296 | ELBOW, 90 - FF1868T-0606S | 2 |
| 11 | 15133 | ELBOW, 90 - FF1868T-0406S | 1 |
| 12 | 19127 | ELBOW, 45 - FF2068T-1212S | 1 |
| 13 | 15480 | ELBOW, 90 - 6801-6 | 1 |
| 14 | 15496 | CONNECTOR, STR - 6400-16-12 | 1 |

# H100-00410 - HYDRAULIC FITTING KIT - (TRACK)

**NOTE: HYDRAULIC FITTINGS GET 545 LOCTITE™**

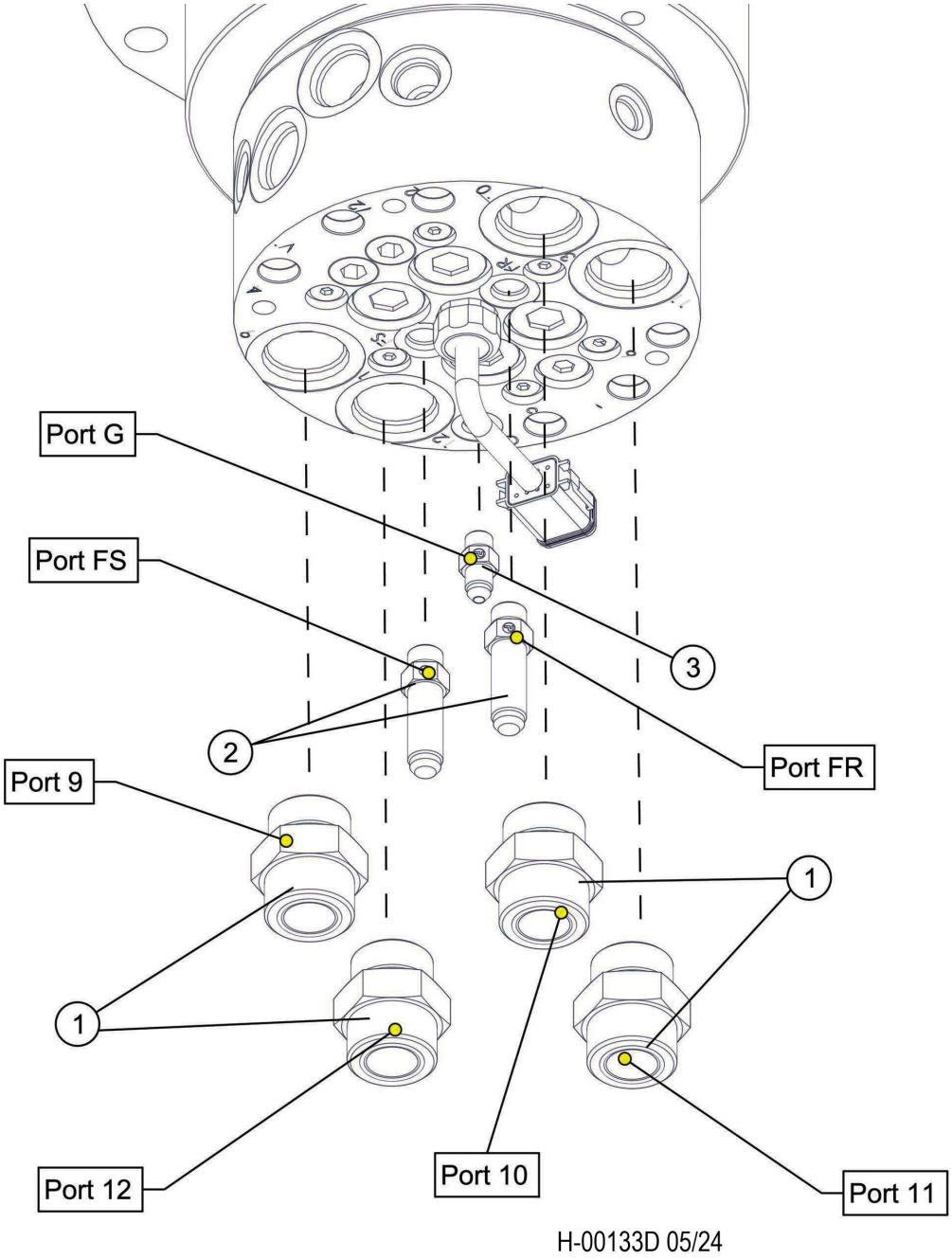


H-00133D 05/24

| Item | Part # | Description | Qty. |
|---|---|---|---|
| 1 | 15225 | CONNECTOR, STR - FF1852T-1616S | 4 |
| 2 | 53887 | FITTING, FUEL - ROTARY MANIFOLD #6 JIC | 2 |
| 3 | 51887 | CONNECTOR, STR - (4F50X-S) | 1 |

# H100-00420 - HYDRAULIC FITTING KIT - (TRACK)

**NOTE: HYDRAULIC FITTINGS GET 545 LOCTITE™**

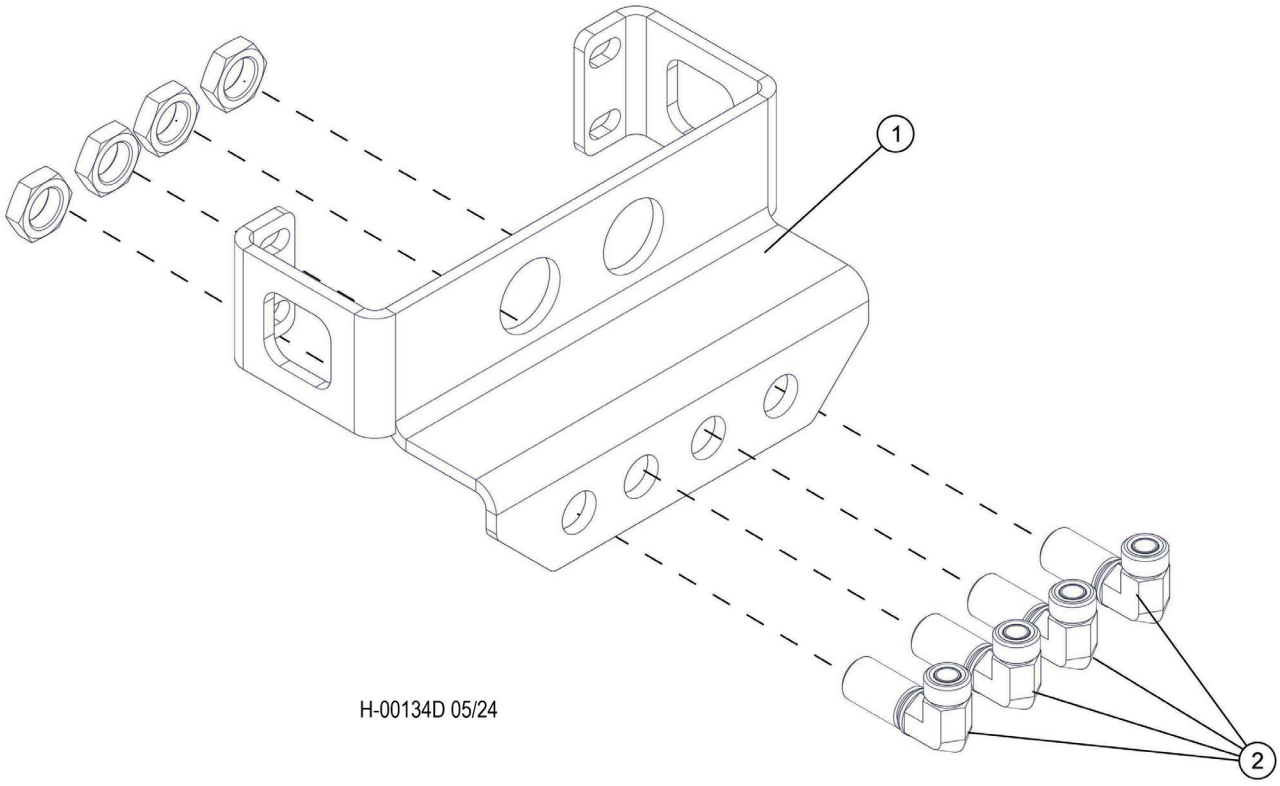


| Item | Part # | Description | Qty. |
|---|---|---|---|
| 1 | 60559 | BULHEAD, FRONT - TM | 1 |
| 2 | 24187 | ELBOW, 90 BULKHEAD - 855BH-TT-08 | 4 |

# H100-00421 - ROTARY MANIFOLD BREAKDOWN

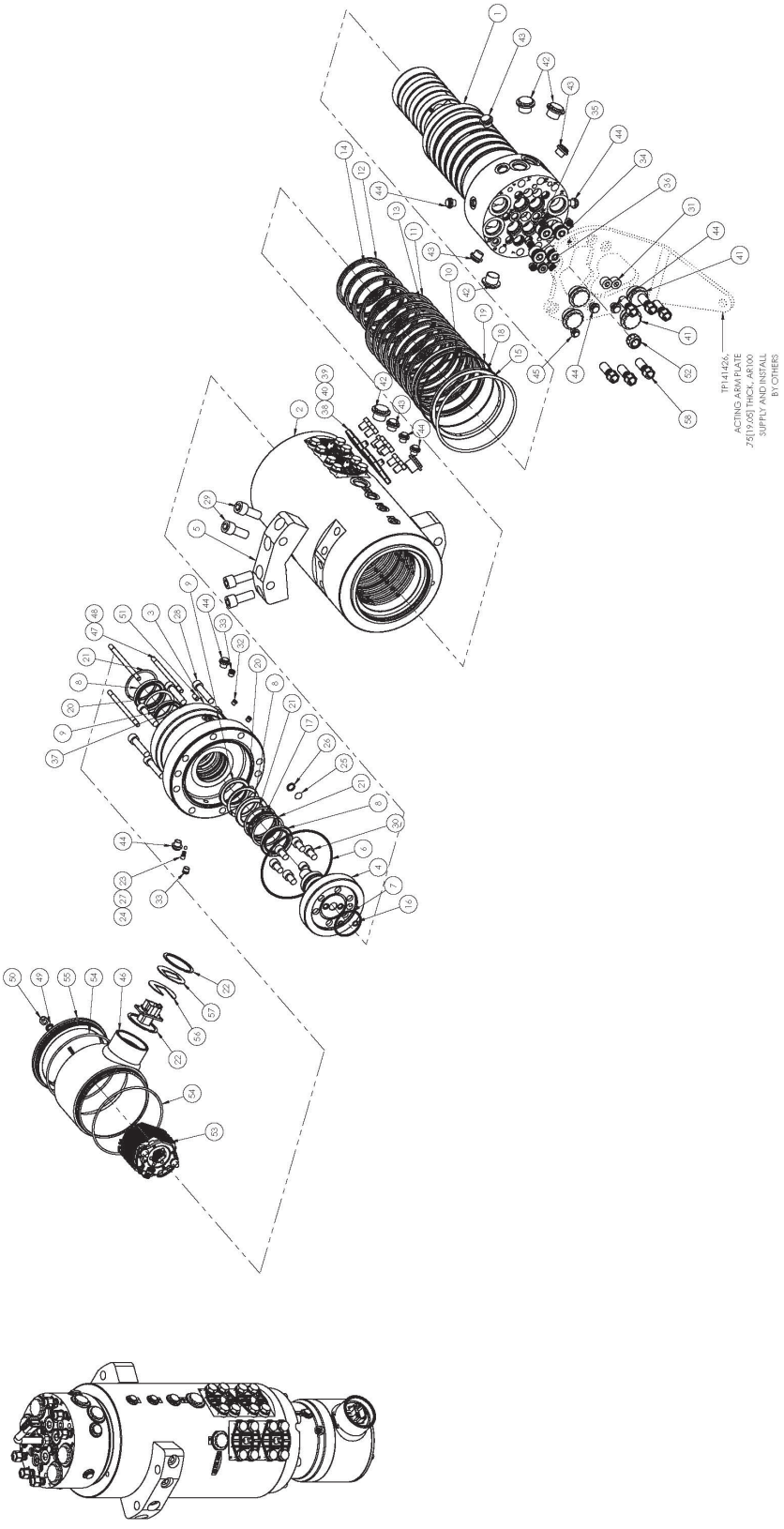

# H100-00421 - ROTARY MANIFOLD BREAKDOWN

| Item | Part # | Description | Qty. |
|---|---|---|---|
| | 650670 | MANIFOLD, ROTARY - 14 PORT TRACK | 1 |
| 1 | TP1414021 | SPOOL, ROTARY | 1 |
| 2 | TP1414002 | BARREL, ROTARY | 1 |
| 3 | HD141425 | CAP, FUSE SECTION, OPEN, HD SLIP RING OPTION | 1 |
| 4 | HD1414006 | RETAINER, SPOOL WITH FUEL | 1 |
| 5 | HD1214003 | MOUNTING PLATE | 2 |
| 6 | N1470 - 258 | ORING 6.000” x 6.250” x 0.125” c/s | 1 |
| 7 | N1470 - 227 | ORING 2.125” x 2.375” x 0.125” c/s | 1 |
| 8 | HD050068080-V | ENVIRO SEAL 50mmX68X8 VITON | 3 |
| 9 | HD050065070-V | ENVIRO SEAL 50mmX65X7 VITON | 2 |
| 10 | HD141610 | SEAL, ENVIRONMENTAL SHAFT, 140mm | 1 |
| 11 | N1173-70-359 | ORING, HNBR 70, 5.750” x 6.125” x .188” c/s | 8 |
| 12 | N1173-70-346 | ORING, HNBR 70, 4.125”x 4.500” x .188” c/s | 5 |
| 13 | RN 140-250-08GL | LOCSEAL, 140 MM | 8 |
| 14 | RN 100-250-08GL | LOCSEAL, 100 MM | 5 |
| 15 | U90 - 363 | ORING URETHANE | 1 |
| 16 | V1476 - 012 | ORING 1/2”X 3/8”X 1/16”, VITON | 2 |
| 17 | HD141415 | RING, ENVIROMENT SEAL SPPRT | 1 |
| 18 | HD140105 | LOCKRING FOR 140mm ENVIRO | 1 |
| 19 | MOR1600020/N | ORING 160mm X 164mm X 2mm C/S NBR70 | 1 |
| 20 | WHM-256 | SPIRAL SNAP RING | 2 |
| 21 | WH-267 | SPIRAL SNAP RING | 3 |
| 22 | WHM-250 | SPIRAL SNAP RING | 2 |
| 23 | 329-008 | THREAD INSERT, ‘E-Z’ LOK, #8-32UNC-2B, 5/16-18UNC-2A | 1 |
| 24 | C0610-041-0095 | SPRING | 1 |
| 25 | TL-C5-190-30 | TEMPERATURE LABEL | 1 |
| 26 | N1470 - 112 | ORING | 1 |
| 27 | BALL M6 | STEEL BALL 6mm | 1 |
| 28 | SHCS M12 X 55 | SHCS METRIC G12.9 | 8 |
| 29 | SHCS M16 X 40 | SHCS METRIC G12.9 | 8 |
| 30 | SHCS M12 X 20 | SHCS METRIC G12.9 | 6 |
| 31 | 81145 | 1/2” NPT HEX PLUG FLUSH | 2 |
| 32 | 22S - S02 | #02 ORB ZLG PLUG SH | 3 |
| 33 | 22S - S04 | #04 ORB ZLG PLUG SH | 2 |
| 34 | HD002282 | #12 ORB CUSTOM PLUG SH | 4 |
| 35 | 22S - S05 | #05 ORB ZLG PLUG SH | 6 |
| 36 | 22S - S08 | #08 ORB ZLG PLUG SH | 1 |
| 37 | 22S - S06 | #06 ORB ZLG PLUG SH | 1 |
| 38 | HDCP-XP-1AI | PLUG | 4 |
| 39 | MOR0360040/N | ORING, 36.0mm X44.0mm X4.0mm | 4 |
| 40 | HHCS M12 X 16MM | HEXBOLT M12X16 G10.9 | 16 |
| 46 | E0000176 | COVER WELDMENT, SLIPRING | 1 |
| 47 | TR-0.31-05.25 | 5/16-18 x 5.25” LENGTH | 3 |
| 48 | HD091418 | HEAT SHRINK TUBE | 3 |
| 49 | 33156 | SEAL WASHER 5/16 | 3 |
| 50 | 70961 | ACORN NUT 5/16-18 | 3 |
| 51 | SHSS 05-18-0.625 | SET SCREW, 5/16-18UNC X 5/8LG | 1 |
| 52 | HD121437 | FITTING, LT 0.500” GRN | 1 |
| 53 | E08080202 | ELC SLIP RING, 6 POWER, 2 SIGNAL | 1 |
| 54 | N1470 - 257 | ORING, 70 DUROMETER 5.875” X 6.125” X 0.125”C/S | 2 |
| 55 | E0000177 | CAP, SLIP RING COVER | 1 |
| 56 | HD121419 | PLATE, CONNECTOR MOUNT | 1 |
| 57 | HD121420 | PLATE, CONNECTOR MOUNT | 1 |
| 58 | B-2005-02-01 | BOLT, CONE LUG STYLE, M16 X 1.5 X 33mm SHANK LENGTH | 6 |

# H100-00430 - LEVELING CARBODY GREASE LINES AND FITTINGS

**NOTE: HYDRAULIC FITTINGS GET 545 LOCTITE™**

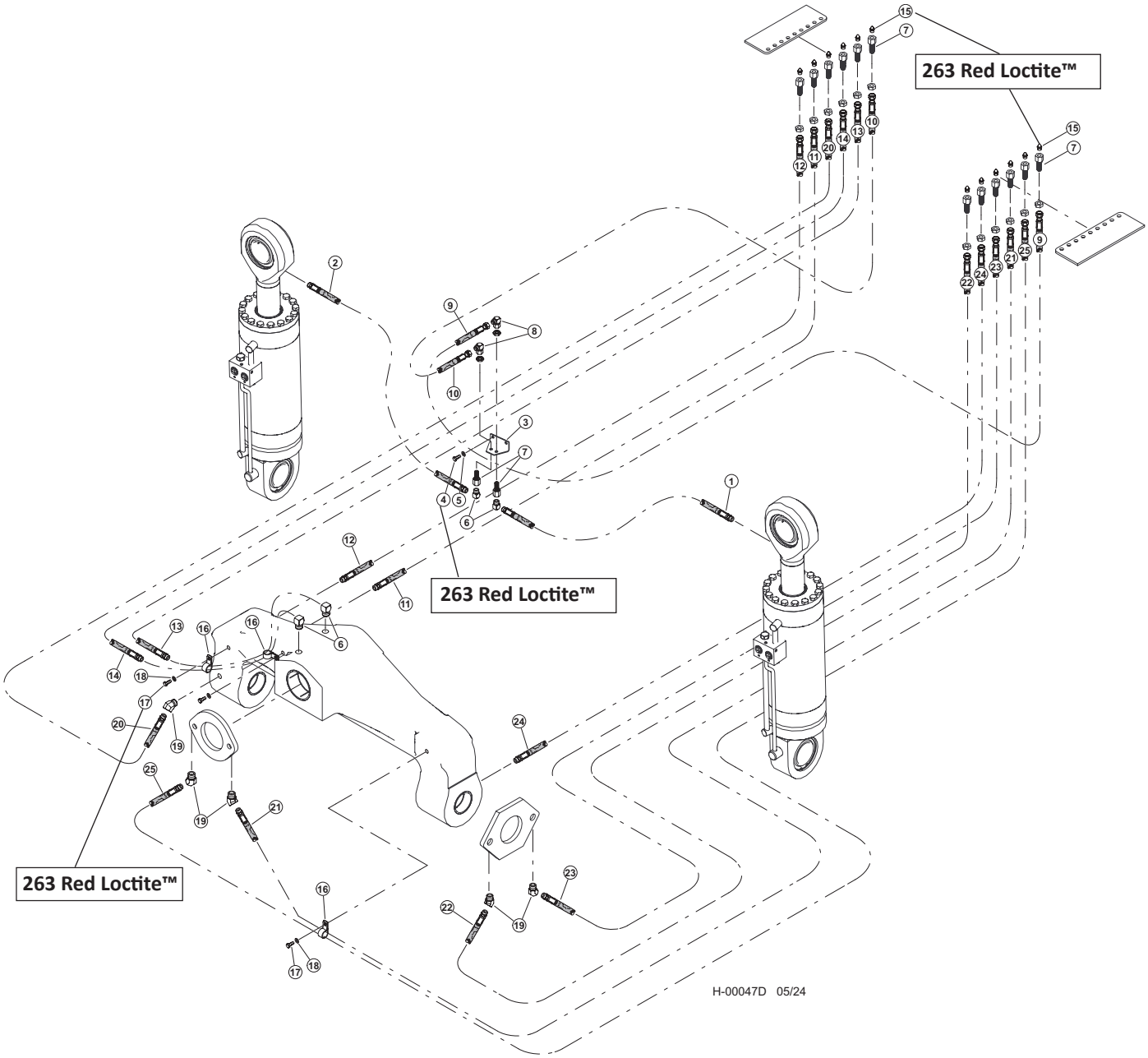

# H100-00430 - LEVELING CARBODY GREASE LINES AND FITTINGS

| Item | Part # | Description | Qty. |
|---|---|---|---|
| | **57457** | **KIT, FITTING - TRACK LEVELING** | 1 |
| 1 | 53262 - (KIT) | HOSE ASSY - HLBD22 02-02SP-02SP-W - (LH CYL. ROD GREASE LINE) | 1 |
| 2 | 53262 - (KIT) | HOSE ASSY - HLBD22 02-02SP-02SP-W - (RH CYL. ROD GREASE LINE) | 1 |
| 3 | 47308 | BRACKET, GREASE LINE - LEVELING | 1 |
| 4 | 15576 | BOLT - .25" X 1" **263 RED LOCTITE™** | 2 |
| 5 | 10800 | WASHER, FLAT - .25" | 2 |
| 6 | 22281 | ELBOW, 1/8-27 NPTF(M), 1/8-17 NPTF(F),90 | 4 |
| 7 | 15658 | CONNECTOR, STR BULKHEAD - 2239-2-4S | 14 |
| 8 | 17023 | ELBOW, 90 SWIVEL - 6500-4 | 2 |
| 9 | 53262 - (KIT) | HOSE ASSY - HLBD112 02-04JS-04JS-W - (LH CYL. BULKHEAD TO BULKHEAD GREASE LINE) | 1 |
| 10 | 53262 - (KIT) | HOSE ASSY - HLBD112 02-04JS-04JS-W - (RH CYL. BULKHEAD TO BULKHEAD GREASE LINE) | 1 |
| 11 | 53262 - (KIT) | HOSE ASSY - HLBD74 02-02PS-04JS-W-125 - (BULKHEAD TO LEVELER - RH REAR INNER) | 1 |
| 12 | 53262 - (KIT) | HOSE ASSY - HLBD75 02-02PS-04JS - (BULKHEAD TO LEVELER - RH REAR OUTER) | 1 |
| 13 | 53262 - (KIT) | HOSE ASSY - HLBD132 02-02SP-04JS-W - (BULKHEAD TO LEVELER - TOP REAR) | 1 |
| 14 | 53262 - (KIT) | HOSE ASSY - HLBD136 02-02SP-04JS - (BULKHEAD TO LEVELER - TOP FRONT) | 1 |
| 15 | 10704 | FITTING, GREASE - .125 NPT - STR **263 RED LOCTITE™** | 12 |
| 16 | 17536 | CLAMP, HOSE - COATED STRAP - .75" | 3 |
| 17 | 15604 | BOLT - .25" X .75" **263 RED LOCTITE™** | 3 |
| 18 | 10757 | WASHER, SAE FLAT - .25" | 3 |
| 19 | 21671 | ELBOW, 45 - 5546134 | 4 |
| 20 | 53262 - (KIT) | HOSE ASSY - HLBD89 02-02PS-04JS - (BULKHEAD TO LEVELER - RH FRONT) | 1 |
| 21 | 53262 - (KIT) | HOSE ASSY - HLBD131 02-02PS-04JS-W - (BULKHEAD TO FRONT LH SLACK ADJUSTER) | 1 |
| 22 | 53262 - (KIT) | HOSE ASSY - HLBD82 02-02PS-04JS - (BULKHEAD TO LH SIDE SLACK ADJUSTER FRONT) | 1 |
| 23 | 53262 - (KIT) | HOSE ASSY - HLBD75 02-02PS-04JS-W125 - (BULKHEAD TO LH SIDE SLACK ADJUSTER REAR) | 1 |
| 24 | 53262 - (KIT) | HOSE ASSY - HLBD79 02-02PS-04JS - (BULKHEAD TO LEVELER - LH REAR) | 1 |
| 25 | 53262 - (KIT) | HOSE ASSY - HLBD134 02-02PS-04JS - (BULKHEAD TO FRONT RH SLACK ADJUSTER) | 1 |

# H100-00440 - NON-LEVELING LEVELING CARBODY HYD. FITTINGS (RM. TO BULKHEAD TO TRACK MOTORS)

**NOTE: HYDRAULIC FITTINGS GET 545 LOCTITE™**

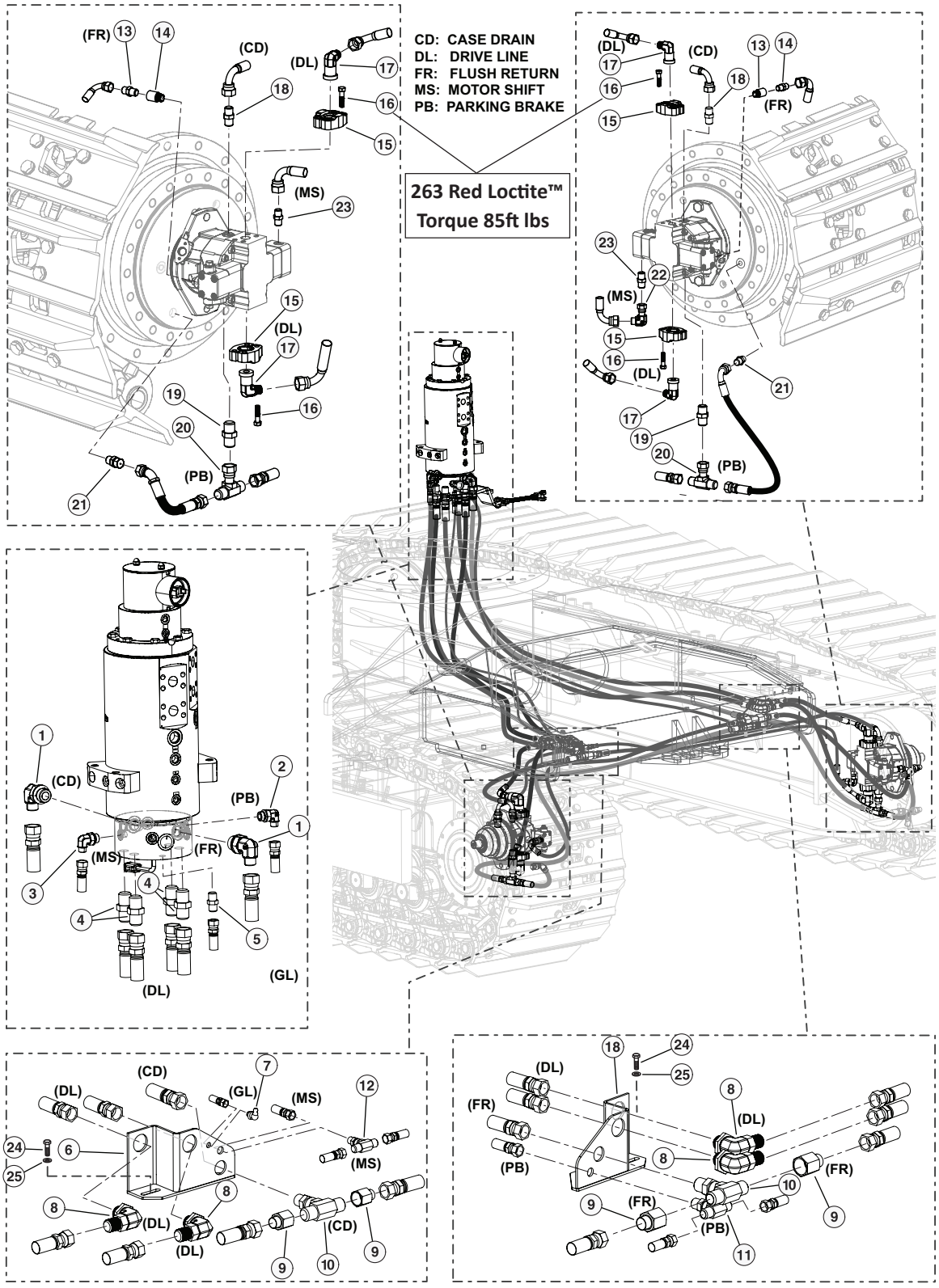


H-00044D 04/24

# H100-00440 - NON-LEVELING LEVELING CARBODY HYD. FITTINGS (RM. TO BULKHEAD TO TRACK MOTORS)

| Item | Part # | Description | Qty. |
|---|---|---|---|
| | **57458** | **KIT, FITTING - TRACK TRUNK** | 1 |
| | **57968** | **KIT, FITTING - ROTARY MANIFOLD TRACK NL** | 1 |
| | **57456** | **KIT, FITTING - TRACK NL CARBODY** | 1 |
| 1 | 17688 | ELBOW, 90 - FF1868T-1212S | 2 |
| 2 | 15133 | ELBOW, 90 - FF1868T-0406S | 1 |
| 3 | 16296 | ELBOW, 90 - FF1868T-0606S | 1 |
| 4 | 15225 | CONNECTOR, STR - FF1852T-1616S | 4 |
| 5 | 51887 | CONNECTOR, STR - (4F50X-S) | 1 |
| 6 | 53762 | BULKHEAD, TRACK HOSE L.H. | 1 |
| 7 | 15684 | FITTING, GREASE - .125 NPT - 90 | 1 |
| 8 | 53680 | FITTING, BULKHEAD UNION ELBOW 16 WELO-WN | 4 |
| 9 | 18581 | CONNECTOR, REDUCER - ORS FF2281T-0812S | 4 |
| 10 | 53192 | FITTING, BULKHEAD BRANCH TEE- 12 WJLO-WL | 2 |
| 11 | 52902 | TEE, BULKHEAD BRANCH - 6 | 1 |
| 12 | 52901 | TEE, BULKHEAD BRANCH - 4 | 1 |
| 13 | 15117 | CONNECTOR, STR - FF1852T-0808S | 2 |
| 14 | 53651 | FITTING, FLUSHING ORIFICE - TRACK MOTOR | 2 |
| 15 | 58359 | CONNECTOR,FLANGE PAD-W48-16-16U-M12 BLK | 4 |
| 16 | 1139657 | BOLT, M12-1.75 X 45MM L 10MM HEX DRIVE **263 RED LOCTITE™ (TORQUE 85FT LBS)** | 16 |
| 17 | 15228 | ELBOW, 90 - FF1868T-1616S | 4 |
| 18 | 52439 | CONNECTOR, MALE ISO 6149 | 1 |
| 19 | 54795 | CONNECTOR, STR ORIFICED .04” TRACK MOTOR | 2 |
| 20 | 52900 | SWIVEL, NUT BRANCH TEE #6 | 2 |
| 21 | 53124 | FITTING, MALE CONNECTOR ISO 6149 | 2 |
| 22 | 15145 | ELBOW, 90 SWIVEL - FF2098T-0404S | 2 |
| 23 | 53157 | FITTING, CONNECTOR - #4 ORF - 14MM | 2 |
| 24 | 11707 | BOLT - .375” X 1” | 4 |
| 25 | 15528 | WASHER, SAE FLAT - .375” | 4 |

# H100-00450 - NON-LEVELING CARBODY HYD. FITTINGS - (FUEL SYSTEM)

**NOTE: HYDRAULIC FITTINGS GET 545 LOCTITE™**

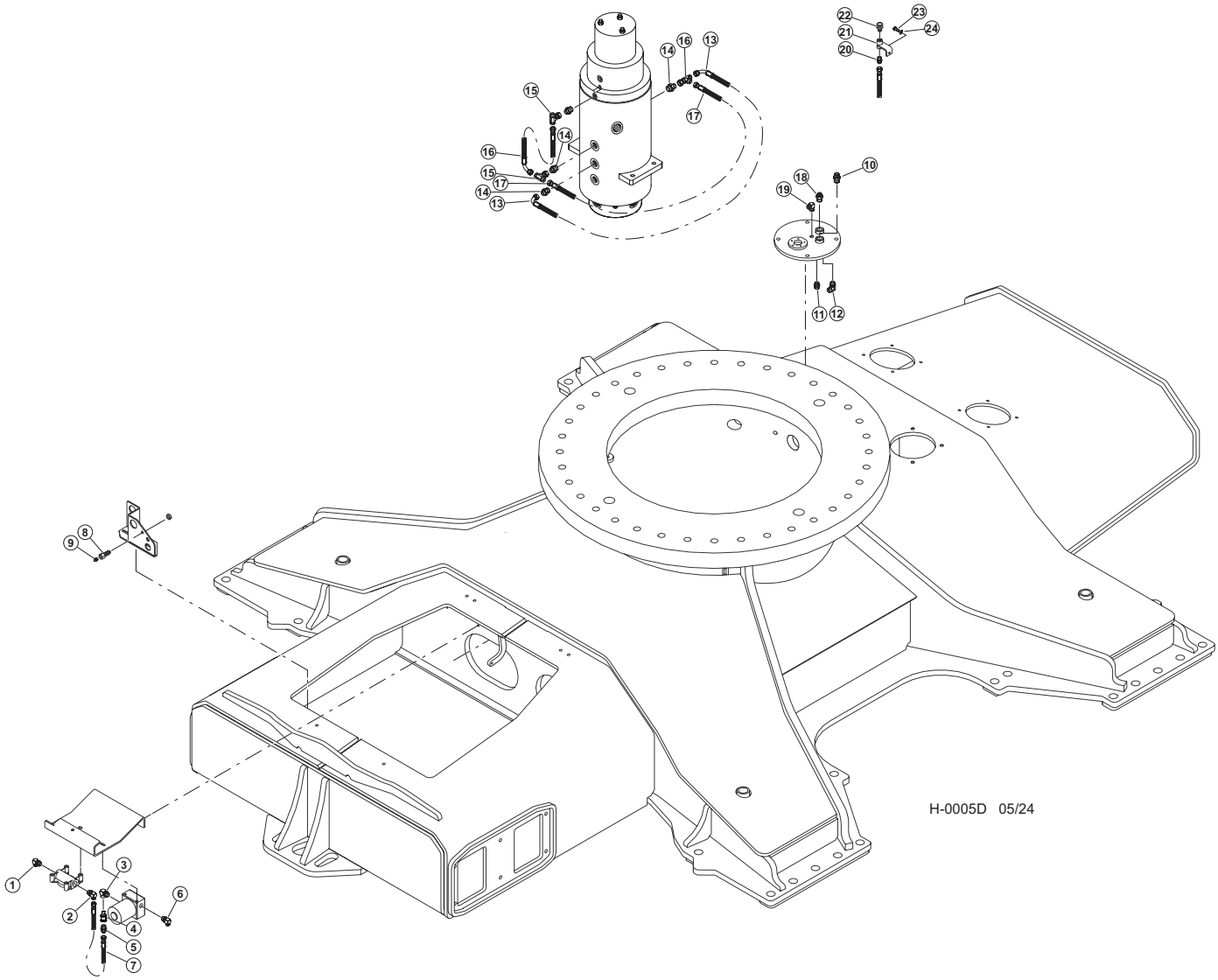

# H100-00450 - NON-LEVELING CARBODY HYD. FITTINGS - (FUEL SYSTEM)

| Item | Part # | Description | Qty. |
|---|---|---|---|
| | **57456** | **KIT, FITTING - TRACK NON-LVL** | **1** |
| | **57968** | **KIT, FITTING - ROTARY MANIFOLD TRACK NL** | **1** |
| 1 | 18109 | ELBOW, 90 - 6801-8-10 | 1 |
| 2 | 53073 | ELBOW, 90 6-JIC X 10-ORB) | 1 |
| 3 | 57824 | FITTING, ELBOW FEMALE - RAPTOR FUEL PUMP | 1 |
| 4 | 15652 | VALVE, CHECK - HYDRAULIC/FUEL | 1 |
| 5 | 16009 | FITTING, 6 FTX-S PIPE-JIC | 1 |
| 6 | 15480 | ELBOW, 90 - 6801-6 | 1 |
| 7 | 58064 | HOSE, FUEL RAPTOR PUMP TRACK | 1 |
| 8 | 15658 | CONNECTOR, STR BULKHEAD - 2239-2-4S | 1 |
| 9 | 10704 | FITTING, GREASE - .125 NPT - STR | 1 |
| 10 | 15489 | CONNECTOR, STR - 6400-8-8 | 1 |
| 11 | 15117 | CONNECTOR, STR - FF1852T-0808S | 1 |
| 12 | 16360 | ELBOW, 90 - FF1868T-0808S | 1 |
| 13 | 55559 - (KIT) | HOSE ASSY - 2022-04-04JS-04J9 - (EVO JUMPER) | 1 |
| 14 | 55700 | FITTING, STRAIGHT - 4-8 F5OX-S | 2 |
| 15 | 55676 | FITTING, 4 S6X-S | 2 |
| 16 | 55559 - (KIT) | HOSE ASSY - 2008.5-04-04JS-04J9 - (EVO JUMPER) | 1 |
| 17 | 55559 - (KIT) | HOSE ASSY - 2024-04-04JS-04J9 - (EVO JUMPER) | 1 |
| 18 | 53103 | FITTING, 6-8 - ORB-JIC | 1 |
| 19 | 15505 | ELBOW, 90 4-4 CLO-S | 1 |
| 20 | 15131 | CONNECTOR, STR - FF2031T-0404S | 1 |
| 21 | 46415 | BRACKET, FUEL VENT NON-LEVEL MACH | 1 |
| 22 | 54170 | VENT, FUEL TANK - TRACK | 1 |
| 23 | 15604 | BOLT - .25” X .75” | 1 |
| 24 | 10757 | WASHER, SAE FLAT - .25” | 1 |

# H100-00460 - HYDRAULIC FITTING KIT - (TRACK-NL)

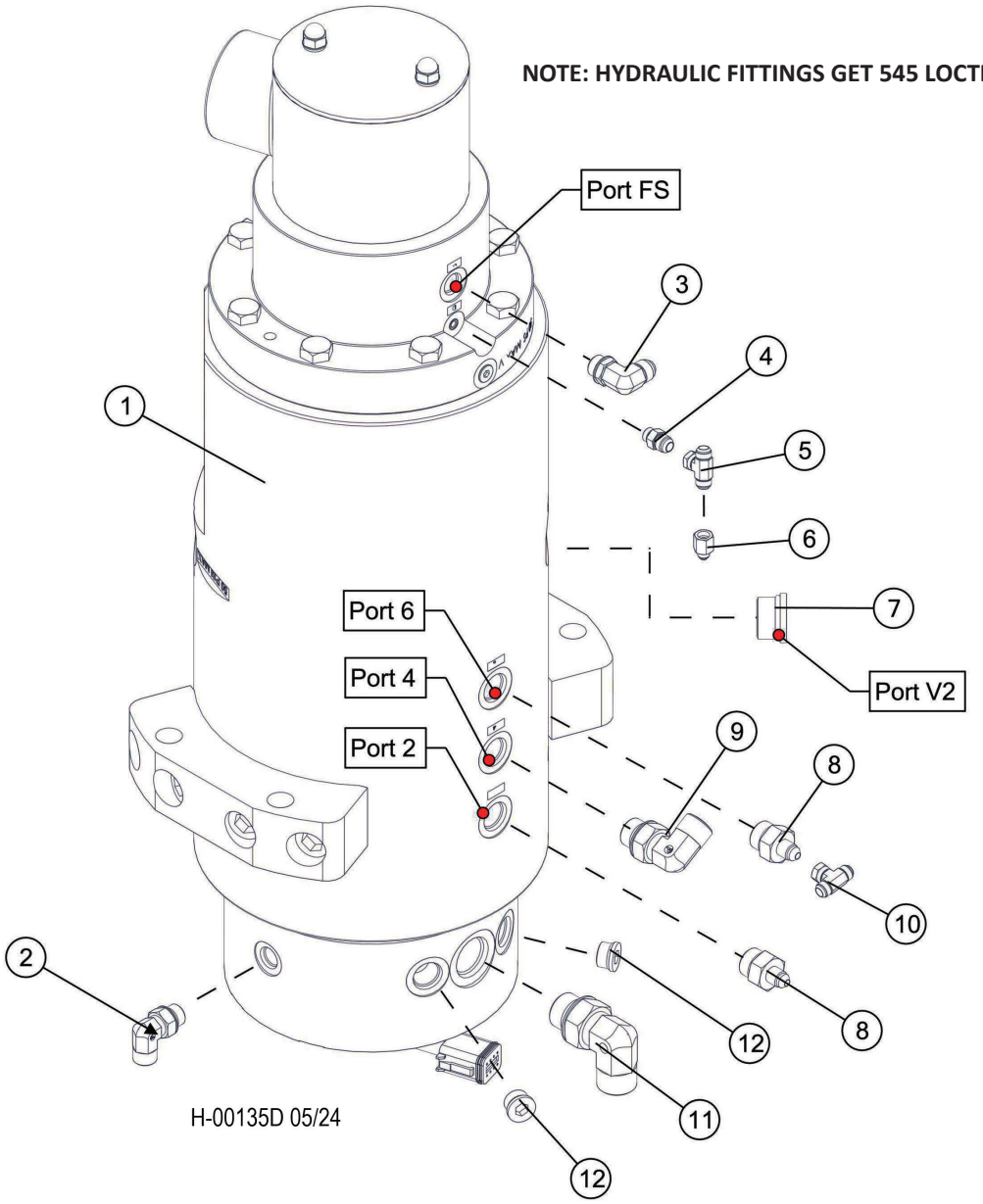


| Item | Part # | Description | Qty. |
|---|---|---|---|
| 1 | 650670 | MANIFOLD, ROTARY - 14 PORT TRACK (HYDRO | 1 |
| 2 | 15133 | ELBOW, 90 - FF1868T-0406S | 1 |
| 3 | 15480 | ELBOW, 90 - 6801-6 | 1 |
| 4 | 15487 | CONNECTOR, STR - 6400-6-4 | 1 |
| 5 | 55372 | FITTING, 4 R6X-S SWIVEL NUT RUN TEE | 1 |
| 6 | 55619 | REDUCER, TUBE END W/LG NUT - 6-4 TRTXN-S | 1 |
| 7 | 15584 | PLUG - 6408-HHP-12 | 1 |
| 8 | 55700 | FITTING, STRAIGHT - 4-8 F5OX-S | 2 |
| 9 | 16360 | ELBOW, 90 - FF1868T-0808S | 1 |
| 10 | 55676 | FITTING, 4 S6X-S | 1 |
| 11 | 17688 | ELBOW, 90 - FF1868T-1212S | 1 |
| 12 | 18949 | PLUG - 6408-HHP-8 | 2 |

# H100-00470 - HYDRAULIC FITTING KIT - (TRACK-NL)

**NOTE: HYDRAULIC FITTINGS GET 545 LOCTITE™**

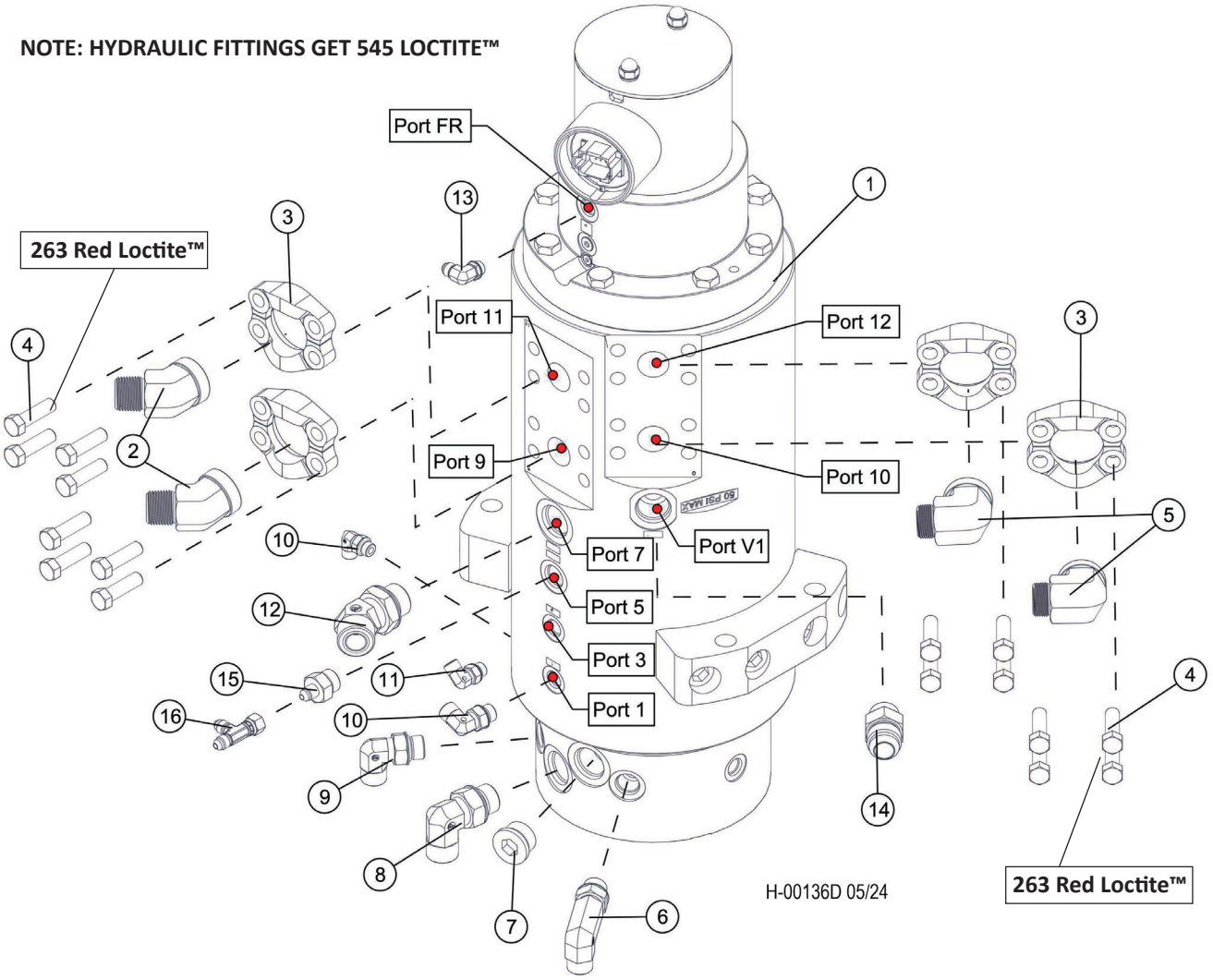


| Item | Part # | Description | Qty. |
|---|---|---|---|
| 1 | 650670 | MANIFOLD, ROTARY - 14 PORT TRACK (HYDRO | 1 |
| 2 | 57459 | ADAPTOR, FLANGE 45DEG ORFS CODE 62 | 2 |
| 3 | 15113 | KIT, SPLIT FLANGE - 1” (CODE 62) | 4 |
| 4 | 15551 | BOLT - 12MM-1.75P X 40MM **263 RED LOCTITE™** | 16 |
| 5 | 20030 | ADAPTER, 90 FLANGE - 16 LOEQ2-S (C62) | 2 |
| 6 | 57445 | FITTING, 8 CC5OLO-S | 1 |
| 7 | 15584 | PLUG - 6408-HHP-12 | 1 |
| 8 | 17688 | ELBOW, 90 - FF1868T-1212S | 1 |
| 9 | 52454 | ELBOW, 90 4 -8 | 1 |
| 10 | 16296 | ELBOW, 90 - FF1868T-0606S | 2 |
| 11 | 15133 | ELBOW, 90 - FF1868T-0406S | 1 |
| 12 | 19127 | ELBOW, 45 - FF2068T-1212S | 1 |
| 13 | 15480 | ELBOW, 90 - 6801-6 | 1 |
| 14 | 15496 | CONNECTOR, STR - 6400-16-12 | 1 |
| 15 | 55700 | FITTING, STRAIGHT - 4-8 F5OX-S | 1 |
| 16 | 55677 | FITTING, 4 R6X-S SWIVEL NUT RUN TEE | 1 |

# H100-00480 - HYDRAULIC FITTING KIT - (TRACK-NL)

**NOTE: HYDRAULIC FITTINGS GET 545 LOCTITE™**

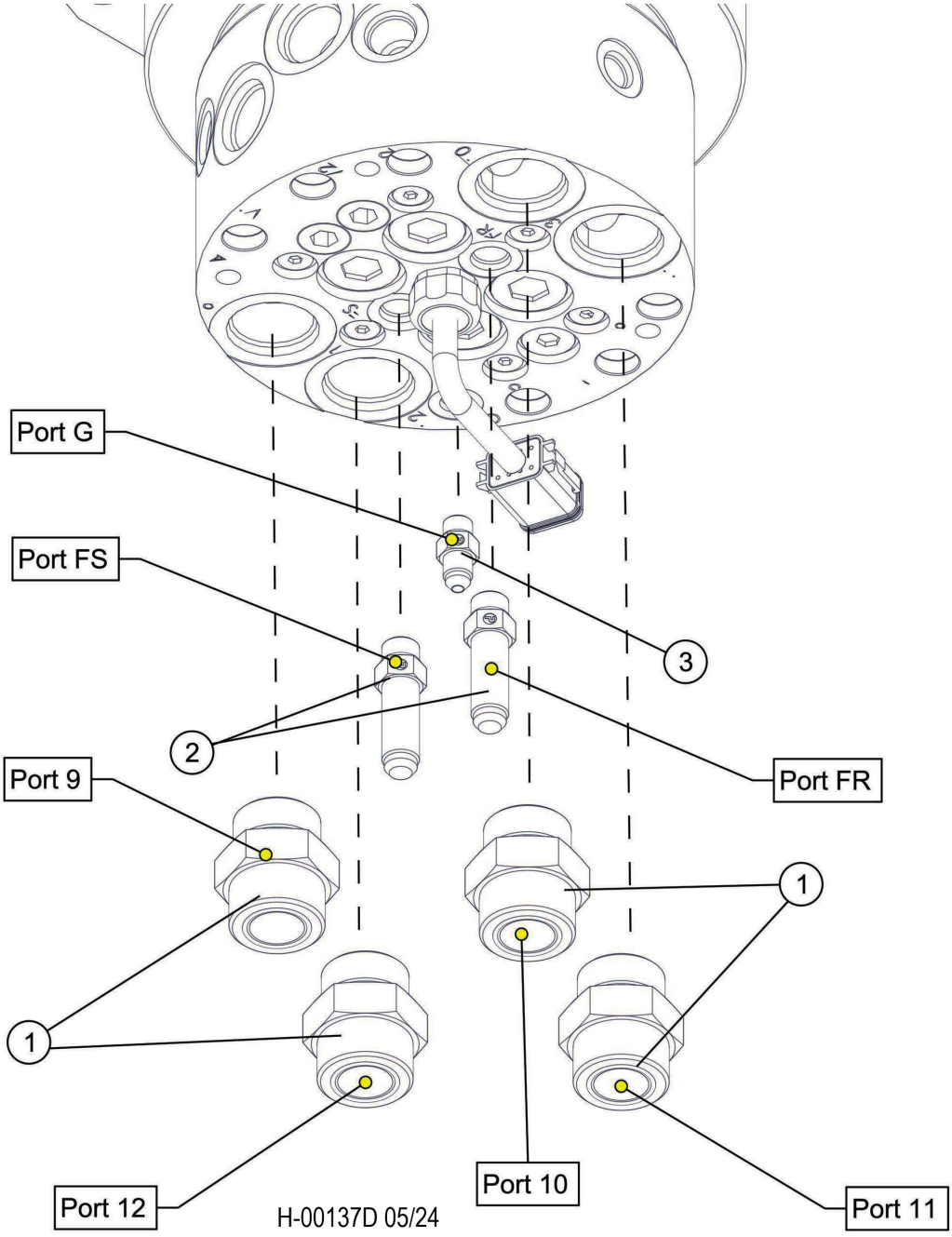


| Item | Part # | Description | Qty. |
|---|---|---|---|
| 1 | 15225 | CONNECTOR, STR - FF1852T-1616S | 4 |
| 2 | 53887 | FITTING, FUEL - ROTARY MANIFOLD #6 JIC | 2 |
| 3 | 51887 | CONNECTOR, STR - (4F50X-S) | 1 |

# H100-00481 - ROTARY MANIFOLD COMPONENTS

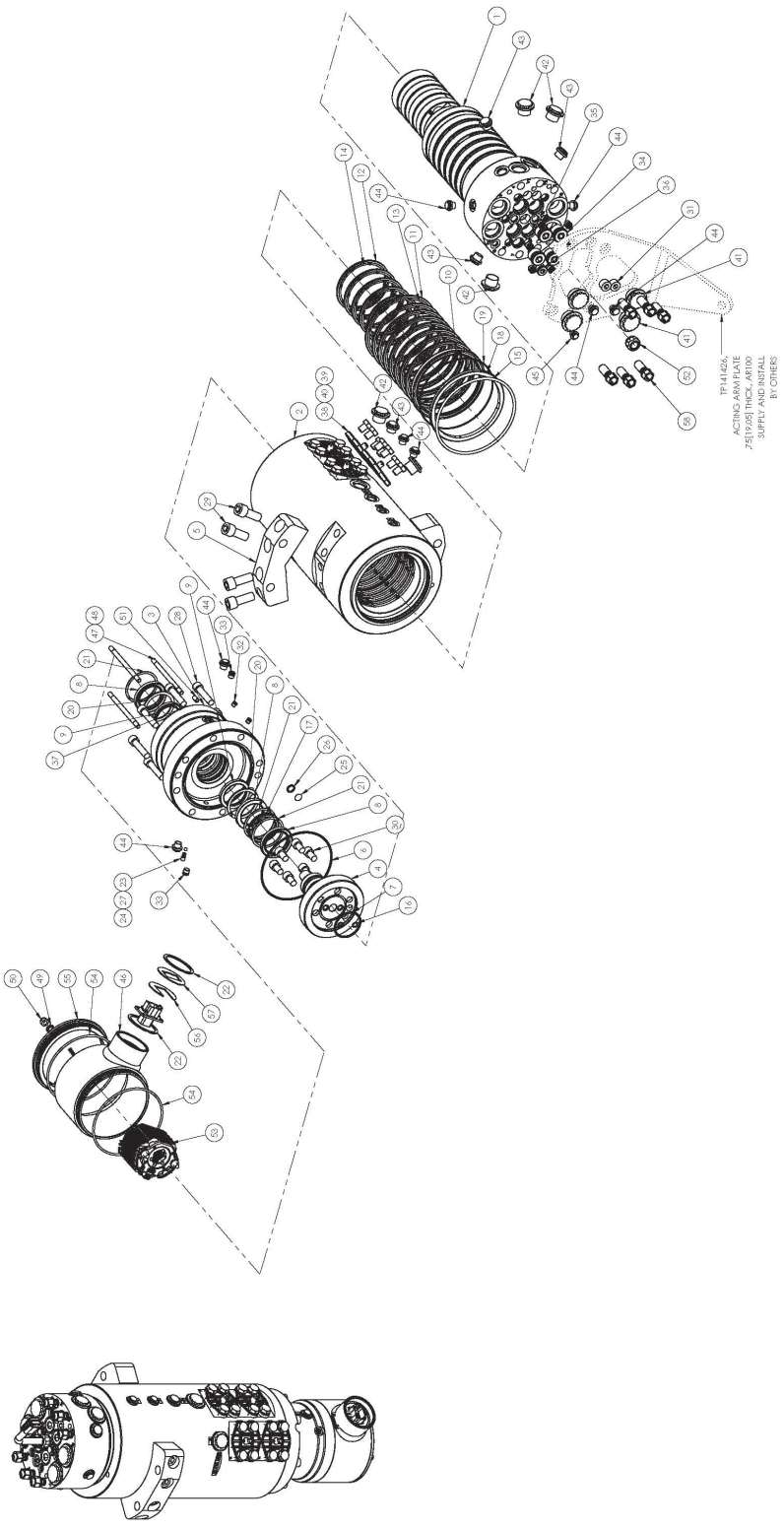

# H100-00481 - ROTARY MANIFOLD COMPONENTS

| Item | Part # | Description | Qty. |
|---|---|---|---|
| | 650670 | MANIFOLD, ROTARY - 14 PORT TRACK | 1 |
| 1 | TP1414021 | SPOOL, ROTARY | 1 |
| 2 | TP1414002 | BARREL, ROTARY | 1 |
| 3 | HD141425 | CAP, FUSE SECTION, OPEN, HD SLIP RING OPTION | 1 |
| 4 | HD1414006 | RETAINER, SPOOL WITH FUEL | 1 |
| 5 | HD1214003 | MOUNTING PLATE | 2 |
| 6 | N1470 - 258 | ORING 6.000” x 6.250” x 0.125” c/s | 1 |
| 7 | N1470 - 227 | ORING 2.125” x 2.375” x 0.125” c/s | 1 |
| 8 | HD050068080-V | ENVIRO SEAL 50mmX68X8 VITON | 3 |
| 9 | HD050065070-V | ENVIRO SEAL 50mmX65X7 VITON | 2 |
| 10 | HD141610 | SEAL, ENVIRONMENTAL SHAFT, 140mm | 1 |
| 11 | N1173-70-359 | ORING, HNBR 70, 5.750” x 6.125” x .188” c/s | 8 |
| 12 | N1173-70-346 | ORING, HNBR 70, 4.125”x 4.500” x .188” c/s | 5 |
| 13 | RN 140-250-08GL | LOCSEAL, 140 MM | 8 |
| 14 | RN 100-250-08GL | LOCSEAL, 100 MM | 5 |
| 15 | U90 - 363 | ORING URETHANE | 1 |
| 16 | V1476 - 012 | ORING 1/2”X 3/8”X 1/16”, VITON | 2 |
| 17 | HD141415 | RING, ENVIROMENT SEAL SPPRT | 1 |
| 18 | HD140105 | LOCKRING FOR 140mm ENVIRO | 1 |
| 19 | MOR1600020/N | ORING 160mm X 164mm X 2mm C/S NBR70 | 1 |
| 20 | WHM-256 | SPIRAL SNAP RING | 2 |
| 21 | WH-267 | SPIRAL SNAP RING | 3 |
| 22 | WHM-250 | SPIRAL SNAP RING | 2 |
| 23 | 329-008 | THREAD INSERT, ‘E-Z’ LOK, #8-32UNC-2B, 5/16-18UNC-2A | 1 |
| 24 | C0610-041-0095 | SPRING | 1 |
| 25 | TL-C5-190-30 | TEMPERATURE LABEL | 1 |
| 26 | N1470 - 112 | ORING | 1 |
| 27 | BALL M6 | STEEL BALL 6mm | 1 |
| 28 | SHCS M12 X 55 | SHCS METRIC G12.9 | 8 |
| 29 | SHCS M16 X 40 | SHCS METRIC G12.9 | 8 |
| 30 | SHCS M12 X 20 | SHCS METRIC G12.9 | 6 |
| 31 | 81145 | 1/2” NPT HEX PLUG FLUSH | 2 |
| 32 | 22S - S02 | #02 ORB ZLG PLUG SH | 3 |
| 33 | 22S - S04 | #04 ORB ZLG PLUG SH | 2 |
| 34 | HD002282 | #12 ORB CUSTOM PLUG SH | 4 |
| 35 | 22S - S05 | #05 ORB ZLG PLUG SH | 6 |
| 36 | 22S - S08 | #08 ORB ZLG PLUG SH | 1 |
| 37 | 22S - S06 | #06 ORB ZLG PLUG SH | 1 |
| 38 | HDCP-XP-1AI | PLUG | 4 |
| 39 | MOR0360040/N | ORING, 36.0mm X44.0mm X4.0mm | 4 |
| 40 | HHCS M12 X 16MM | HEXBOLT M12X16 G10.9 | 16 |
| 46 | E0000176 | COVER WELDMENT, SLIPRING | 1 |
| 47 | TR-0.31-05.25 | 5/16-18 x 5.25” LENGTH | 3 |
| 48 | HD091418 | HEAT SHRINK TUBE | 3 |
| 49 | 33156 | SEAL WASHER 5/16 | 3 |
| 50 | 70961 | ACORN NUT 5/16-18 | 3 |
| 51 | SHSS 05-18-0.625 | SET SCREW, 5/16-18UNC X 5/8LG | 1 |

Please contact a TimberPro Dealer or Factory before attempting to disassemble or repair rotary manifold. Rotary manifold

# H100-00481 - ROTARY MANIFOLD COMPONENTS

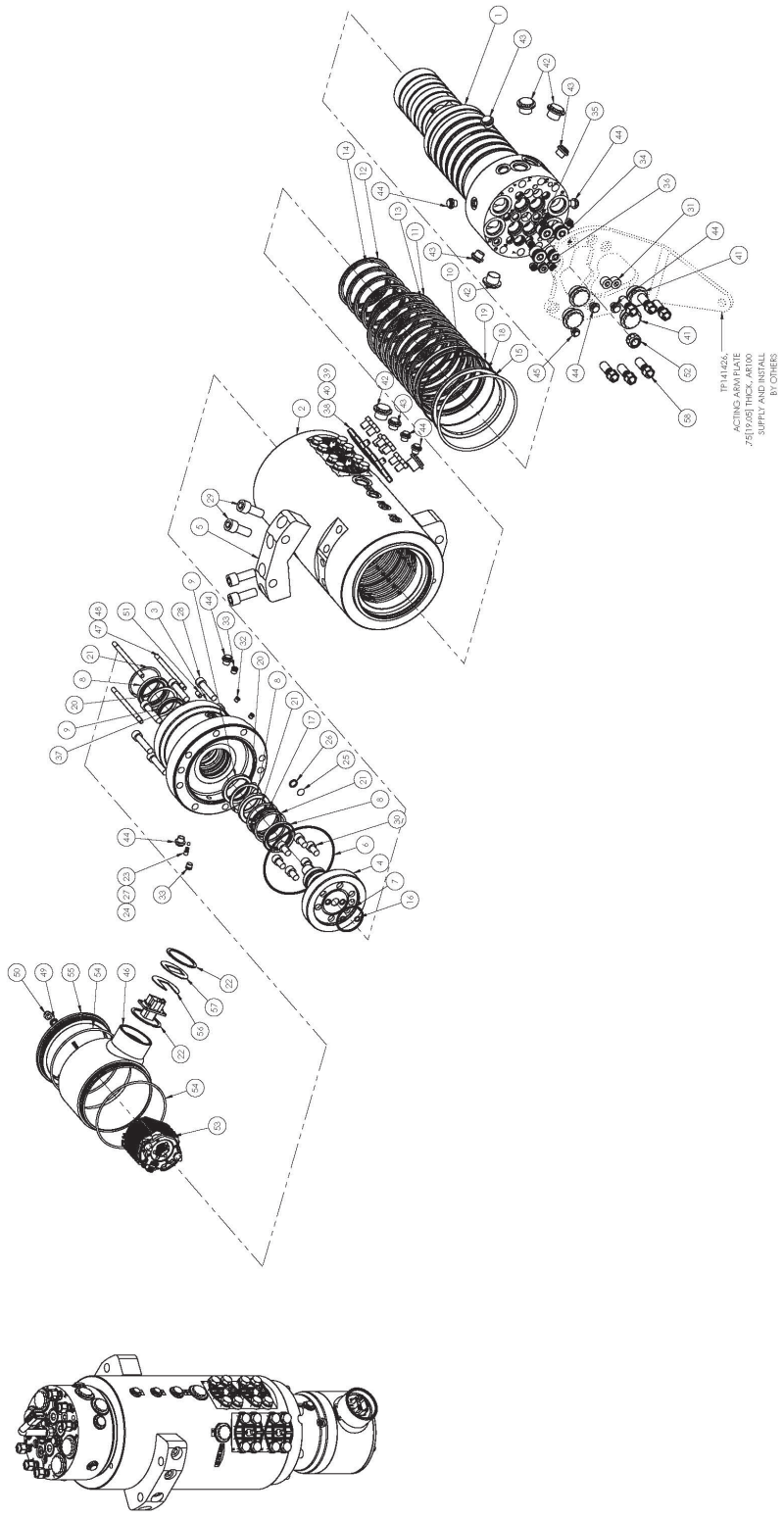

# H100-00481 - ROTARY MANIFOLD COMPONENTS

| Item | Part # | Description | Qty. |
|---|---|---|---|
| 52 | HD121437 | FITTING, LT 0.500” GRN | 1 |
| 53 | E08080202 | ELC SLIP RING, 6 POWER, 2 SIGNAL | 1 |
| 54 | N1470 - 257 | ORING, 70 DUROMETER 5.875” X 6.125” X 0.125”C/S | 2 |
| 55 | E0000177 | CAP, SLIP RING COVER | 1 |
| 56 | HD121419 | PLATE, CONNECTOR MOUNT | 1 |
| 57 | HD121420 | PLATE, CONNECTOR MOUNT | 1 |
| 58 | B-2005-02-01 | BOLT, CONE LUG STYLE, M16 X 1.5 X 33mm SHANK LENGTH | 6 |

Please contact a TimberPro Dealer or Factory before attempting to disassemble or repair rotary manifold. Rotary manifold

# H100-00490 - MAIN BOOM PIPING - DISC SAW

**NOTE: HYDRAULIC FITTINGS GET 545 LOCTITE™**

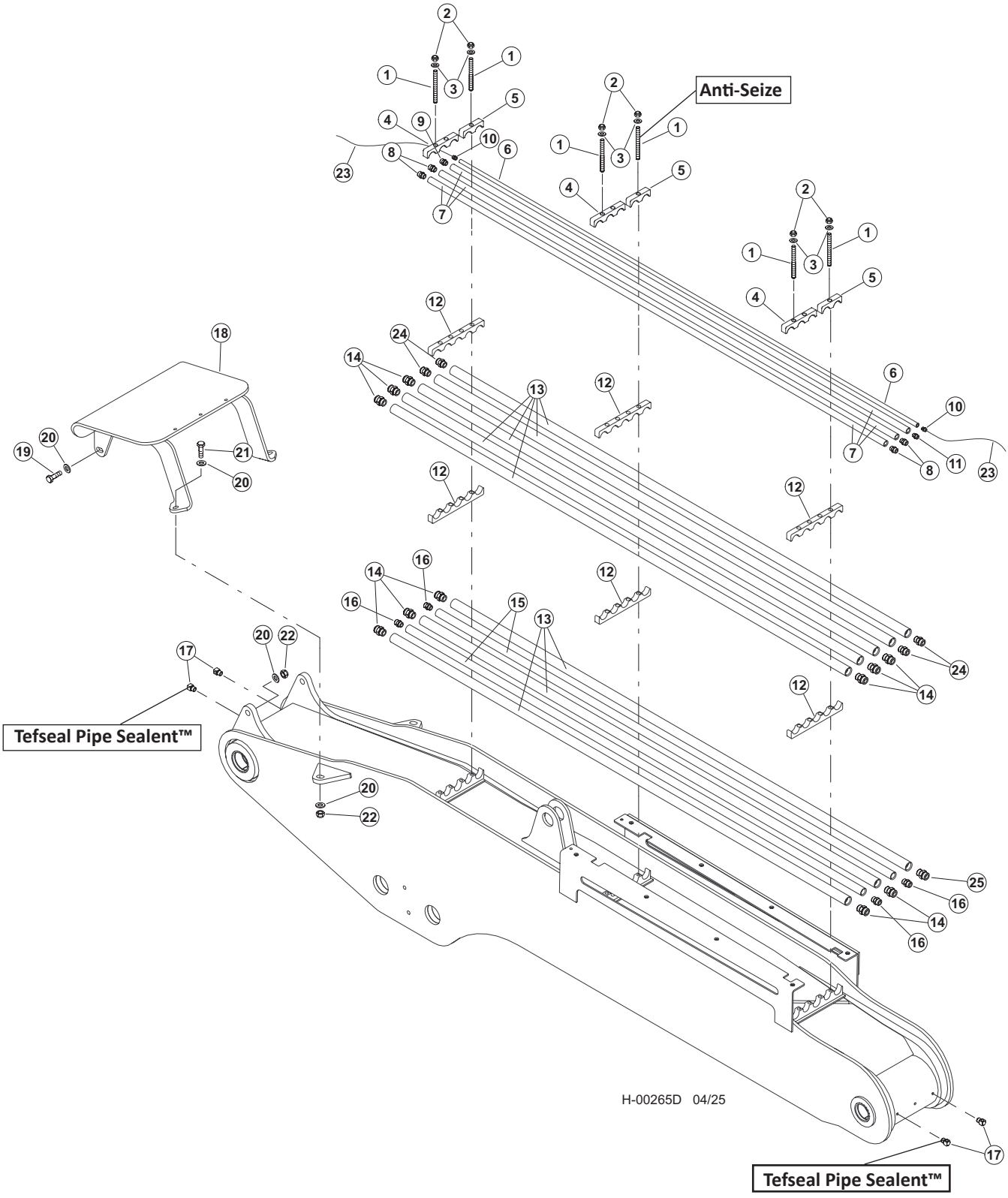

# H100-00490 - MAIN BOOM PIPING - DISC SAW

| Item | Part # | Description | Qty. |
|---|---|---|---|
| 1 | 17062 | STUD - .625” X 8” **ANTI-SEIZE™** | 9 |
| 2 | 15563 | NUT, NYLOCK - .625” | 9 |
| 3 | 10771 | WASHER, SAE FLAT - .625 | 9 |
| 4 | 85086 | CLAMP, SADDLE TOP TUBE - 1”/1”/1” | 3 |
| 5 | 54181 | CLAMP, SADDLE TOP TUBE - 3/8”P (1 TUBE) | 3 |
| 6 | 53116 | TUBELINE - .3/8” X 108” - BLACK PIPE | 1 |
| 7 | 51815 | TUBELINE - .5” X 108” | 3 |
| 8 | 51880 (KIT - 57398) | CONNECTOR, STR - (10-8 F50L0-S) | 4 |
| 9 | 15117 (KIT - 57398) | CONNECTOR, STR - FF1852T-1208S | 1 |
| 10 | 51878 (KIT - 57398) | CONNECTOR, STR - MALE PIPE (6-6 FLO-S) | 2 |
| 11 | 16913 (KIT - 57398) | CONNECTOR, STR - FF1852T-0808S | 1 |
| 12 | 52155 | CLAMP, SADDLE - DRILLED (5-1” TUBES) | 6 |
| 13 | 51833 | TUBELINE - 1” X 108” FB MAIN | 8 |
| 14 | 15225 (KIT - 57398) | CONNECTOR, STR - FF1852T-1616S | 11 |
| 15 | 51834 | TUBELINE - .75” X 108” FB MAIN | 2 |
| 16 | 15152 (KIT - 57398) | CONNECTOR, STR - FF1852T-1212S | 4 |
| 17 | 22281 | ELBOW, 1/8-27 NPTF(M), 1/8-17 NPTF(F),90 **TEFSEAL PIPE SEALANT™** | 4 |
| 18 | 53927 | GUARD, HOSE - MAIN BOOM (FB)(53919 BOOM) | 1 |
| 19 | 10840 | BOLT - .75” X 3” | 2 |
| 20 | 10806 | WASHER, 3/4” USS TRU-TORQ | 8 |
| 21 | 58398 | BOLT - .75” X 2.75” | 2 |
| 22 | 10817 | NUT, 3/4-10 UNC | 4 |
| 23 | 58380 | CABLE | 30’ |
| 24 | 52866 (KIT - 57398) | CONNECTOR, STR - 10-16 F50LO-S | 4 |
| 25 | 17063 (KIT - 57398) | CONNECTOR, STR - FF1852T-2016S | 1 |

# H100-00500 - STICK BOOM PIPING - DISC SAW

**NOTE: HYDRAULIC FITTINGS GET 545 LOCTITE™**

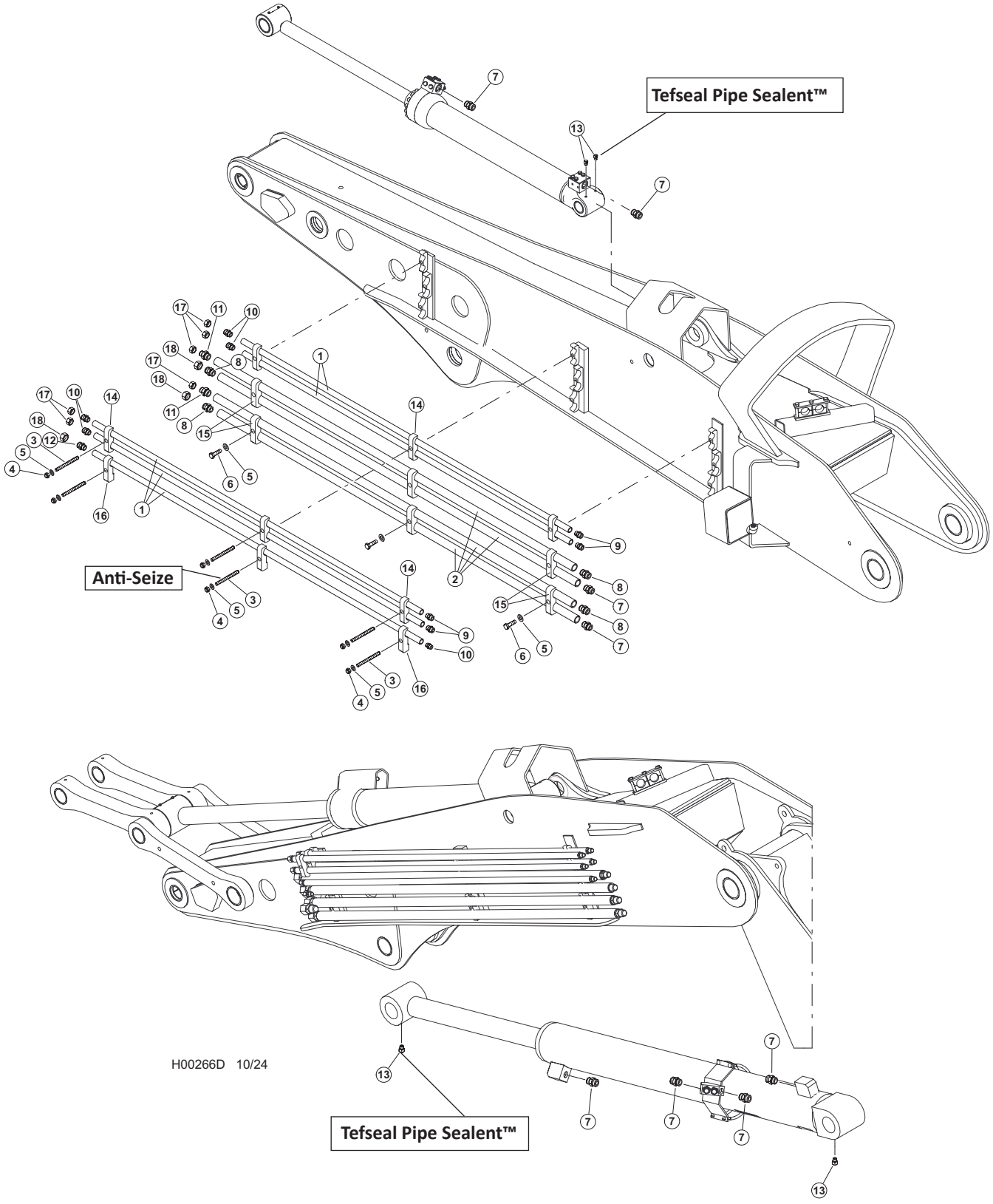

# H100-00500 - STICK BOOM PIPING - DISC SAW

| Item | Part # | Description | Qty. |
|---|---|---|---|
| 1 | 16513 | TUBELINE - .5” X 80” | 5 |
| 2 | 16506 | TUBELINE - 1” X 84” | 4 |
| 3 | 15672 | STUD - .625”-11 X 6.25” **ANTI-SEIZE™** | 6 |
| 4 | 15563 | NUT, NYLOCK - .625” | 6 |
| 5 | 10771 | WASHER, FLAT - .625” | 9 |
| 6 | 15517 | BOLT - .625” X 2.5” | 3 |
| 7 | 15525 (KIT - 57399) | CONNECTOR, STR - FF1852T-1616S | 10 |
| 8 | 15226 (KIT - 57399) | CONNECTOR, STR - FF1852T-1216S | 4 |
| 9 | 51880 (KIT - 57399) | CONNECTOR, STR - (10-8 F50L0-S) | 4 |
| 10 | 15117 (KIT - 57399) | CONNECTOR, STR - FF1852T-0808S | 5 |
| 11 | 57394 (KIT - 57399) | FITTING, 8-16 F5OLO-S | 2 |
| 12 | 16913 (KIT - 57399) | CONNECTOR, STR - FF1852T-1208S | 1 |
| 13 | 22281 | ELBOW, 90 - 5546132 **TEFSEAL PIPE SEALANT™** | 4 |
| 14 | 15272 | CLAMP, SADDLE TOP TUBE - .5” & .5” | 6 |
| 15 | 12447 | CLAMP, SADDLE TOP TUBE - 1” & 1” | 6 |
| 16 | 23222 | CLAMP, SADDLE TOP TUBE - .5” (1 TUBE) | 3 |
| 17 | 15434 | CAP - FF9863-08S | 6 |
| 18 | 15437 | CAP - FF9863-12S | 3 |

# H-2225200, H-2256700 - DISC SAW PIPING - PRESSURE, CASE DRAIN & - LOAD SENSE (DISC SAW PUMP TO BOOM)

**NOTE: HYDRAULIC FITTINGS GET 545 LOCTITE™**

**NOTE: APPLY GREASE TO O-RINGS**

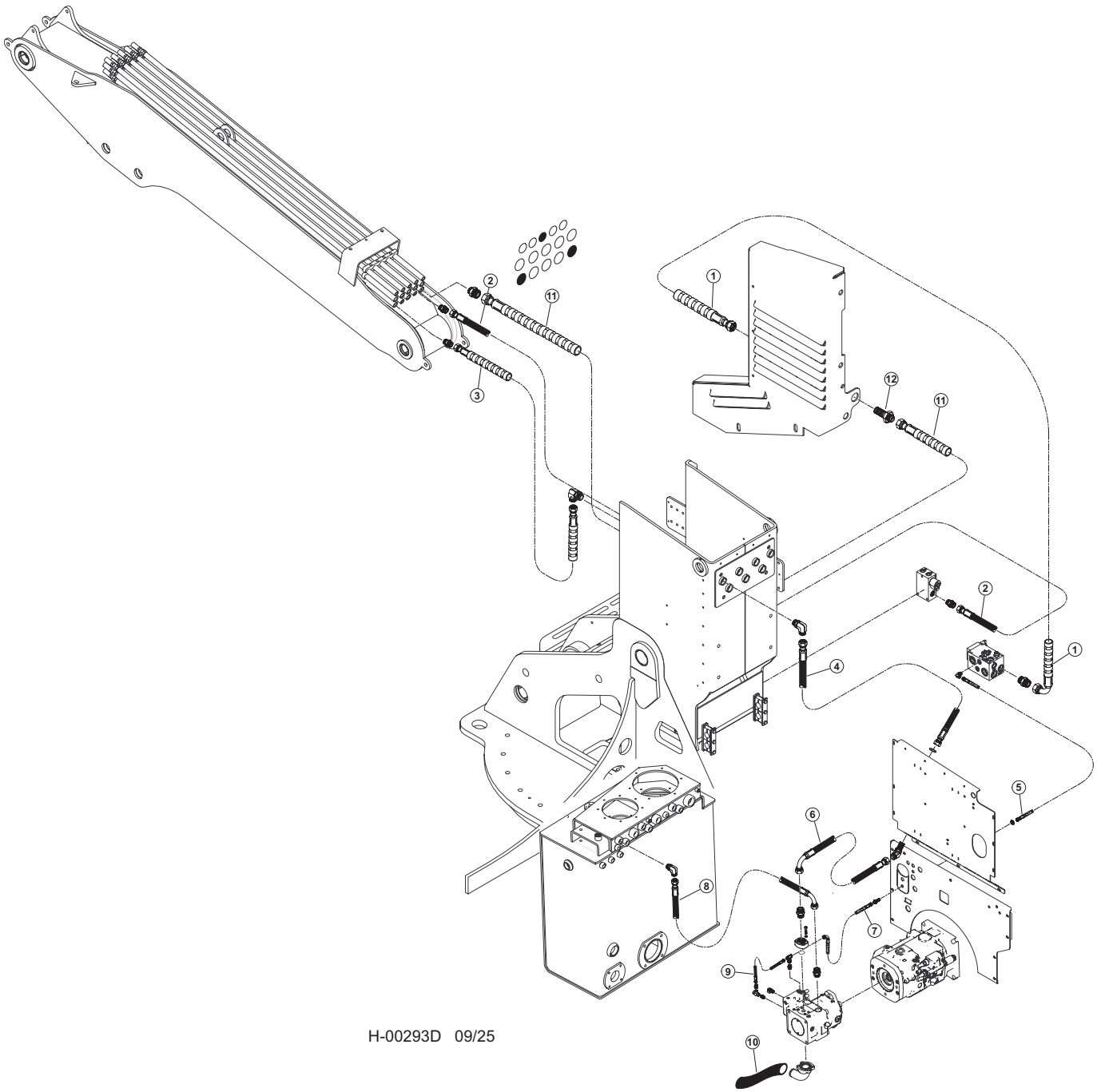


H-00293D 09/25

# H-2225200, H-2256700 - DISC SAW PIPING - PRESSURE, CASE DRAIN & - LOAD SENSE (DISC SAW PUMP TO BOOM)

| Item | Part # | Description | Qty. |
|---|---|---|---|
| 1 | 689410 - (658781 - KIT) | HOSE, HYD, 187TC44 20-20JS-20J9-SW **- (DISC SAW RETURN)** | 1 |
| 2 | 65880 - (65878 - KIT) | HOSE, HYD, 187TC54 12-12OS-12OS-W **- (ATTACHMENT CASE DRAIN)** | 1 |
| 3 | 65885 - (65878 - KIT) | HOSE, HYD, 787TC40 16-16OS-16OS-SW **- (DISC SAW PRESSURE)** | 1 |
| 4 | 65874 - (65878 - KIT) | HOSE, HYD, 787TC24.5 16-16OS-16OS **- (DISC SAW PRESSURE)** | 1 |
| 5 | 65877 - (65878 - KIT) | HOSE, HYD, 787TC39 04-04OS-04OS-W **- (AUXILARY PUMP LS DRAIN)** | 1 |
| 6 | 65875 - (65872 - KIT) | HOSE, HYD, 787TC34 16-16OS-16O9 **- (DISC SAW PRESSURE)** | 1 |
| 7 | 65876 - (65872 - KIT) | HOSE, HYD, 787TC35 04-04OS-04O9-W **- (AUXILARY PUMP LS DRAIN)** | 1 |
| 8 | 65879 - (65878 - KIT) | HOSE, HYD, 187TC27.5 12-12OS-12O9 **- (AUXILARY PUMP CASE DRAIN)** | 1 |
| 9 | 65873 - (65872 - KIT) | HOSE, HYD, 787TC11 04-04OS-04O9 **- (AUXILARY PUMP LOAD SENSE)** | 1 |
| 10 | 65883 - (65878 - KIT) | HOSE, SUCTION, 7219-200018.532-00-00 **- (AUXILARY PUMP SUCTION INLET)** | 1 |
| 11 | 689400 - (658781 - KIT) | HOSE, HYD, 187TC44 20-20JS-20OS-SW **- (DISC SAW RETURN)** | 1 |
| 12 | 57491- (57950- KIT) | FITTING, 20 WTX-WLN-S | 1 |

# H100-00520 - DISC SAW PIPING - TOOL TILT (K220/L90 VALVE) - MAIN VALVE TO BOOM

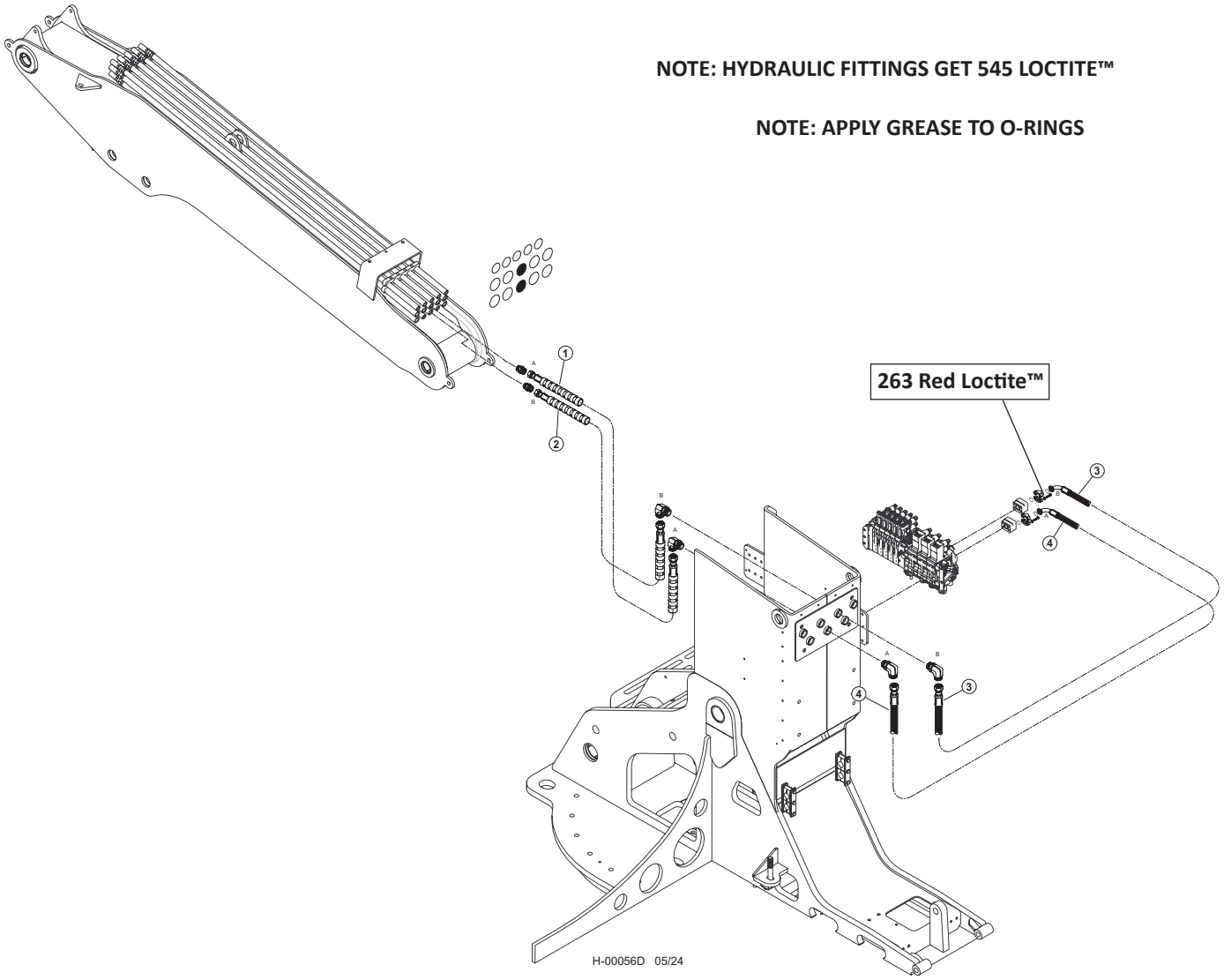


| Item | Part # | Description | Qty. |
|---|---|---|---|
| 1 | 57942 - (KIT) | HOSE ASSY - 722TC40 16-16OS-16OS-SW - (TOOL CYLINDER “A”) | 1 |
| 2 | 57942 - (KIT) | HOSE ASSY - 722TC40 16-16OS-16OS-SW - (TOOL CYLINDER “B”) | 1 |
| 3 | 57942 - (KIT) | HOSE ASSY - 722TC38 16-16OS-16PA9 - (TOOL CYLINDER “B”) | 1 |
| 4 | 57942 - (KIT) | HOSE ASSY - 722TC37 16-16OS-16PA9 - (TOOL CYLINDER “A”) | 1 |

# H200-00240 - DISC SAW PIPING - TOOL TILT (W450/W300 VALVE)
# MAIN VALVE TO BOOM

**NOTE: HYDRAULIC FITTINGS GET 545 LOCTITE™**

**NOTE: APPLY GREASE TO O-RINGS**

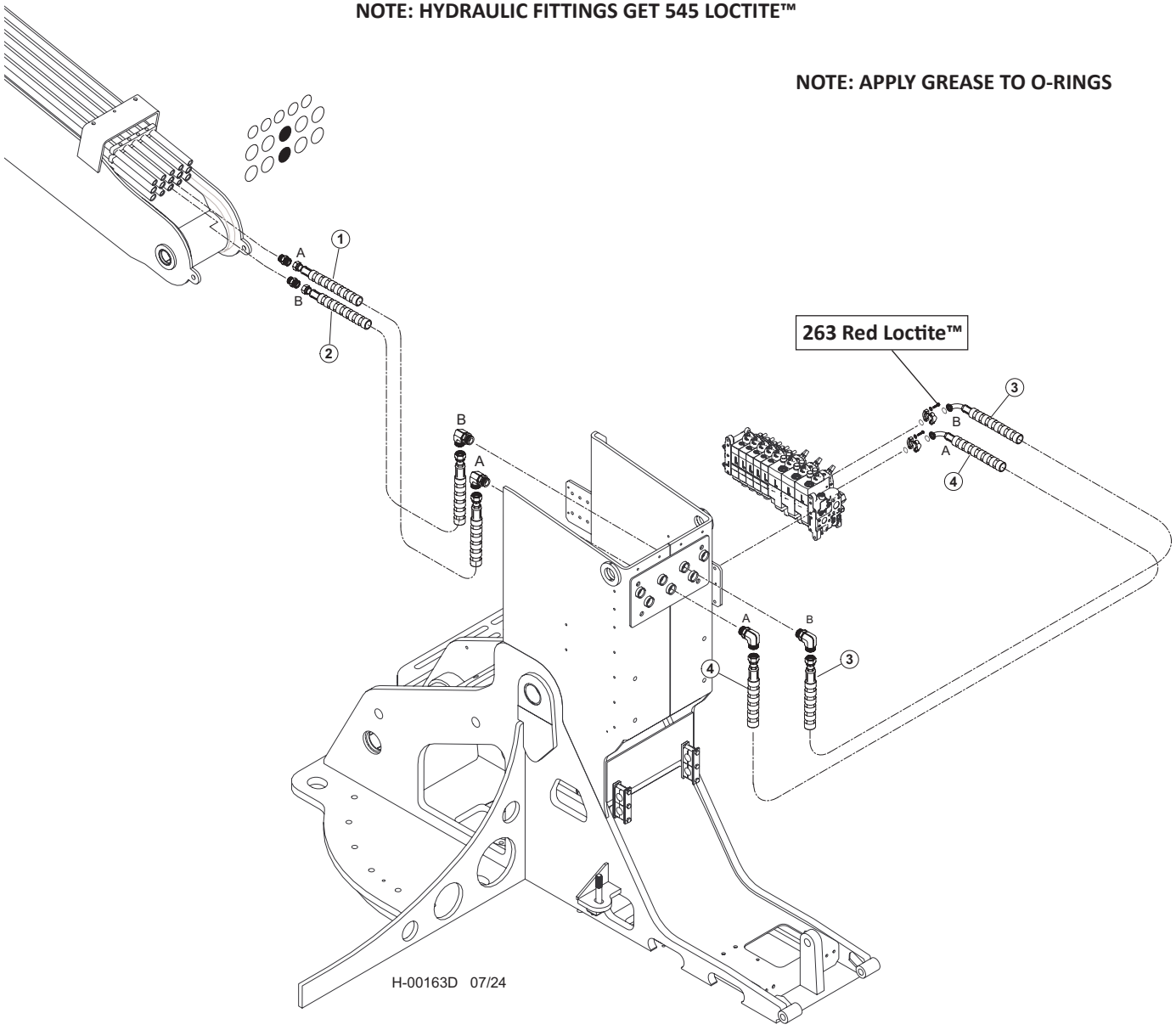


| Item | Part # | Description | Qty. |
|---|---|---|---|
| 1 | 65885 - (65878 - KIT) | HOSE, HYD, 787TC40 16-16OS-16OS-SW **("A" PORT - CHIMNEY TO BOOM)** | 1 |
| 2 | 65884 - (65878 - KIT) | HOSE, HYD, 787TC39 16-16OS-16OS-SW **("B" PORT - CHIMNEY TO BOOM)** | 1 |
| 3 | 65858 - (65856 - KIT) | HOSE, HYD, 787TC36.5 16-16OS-20PH9-SW **("B" PORT - VALVE TO CHIMNEY)** | 1 |
| 4 | 65482 - (65856 - KIT) | HOSE, HYD, 787TC36 16-16OS-20PH9-SW **("A" PORT - VALVE TO CHIMNEY)** | 1 |

# H100-00530 - DISC SAW PIPING - STICK BOOM CYLINDER (K220/L90 VALVE) (MAIN VALVE TO BOOM)

**NOTE: HYDRAULIC FITTINGS GET 545 LOCTITE™**

**NOTE: APPLY GREASE TO O-RINGS**

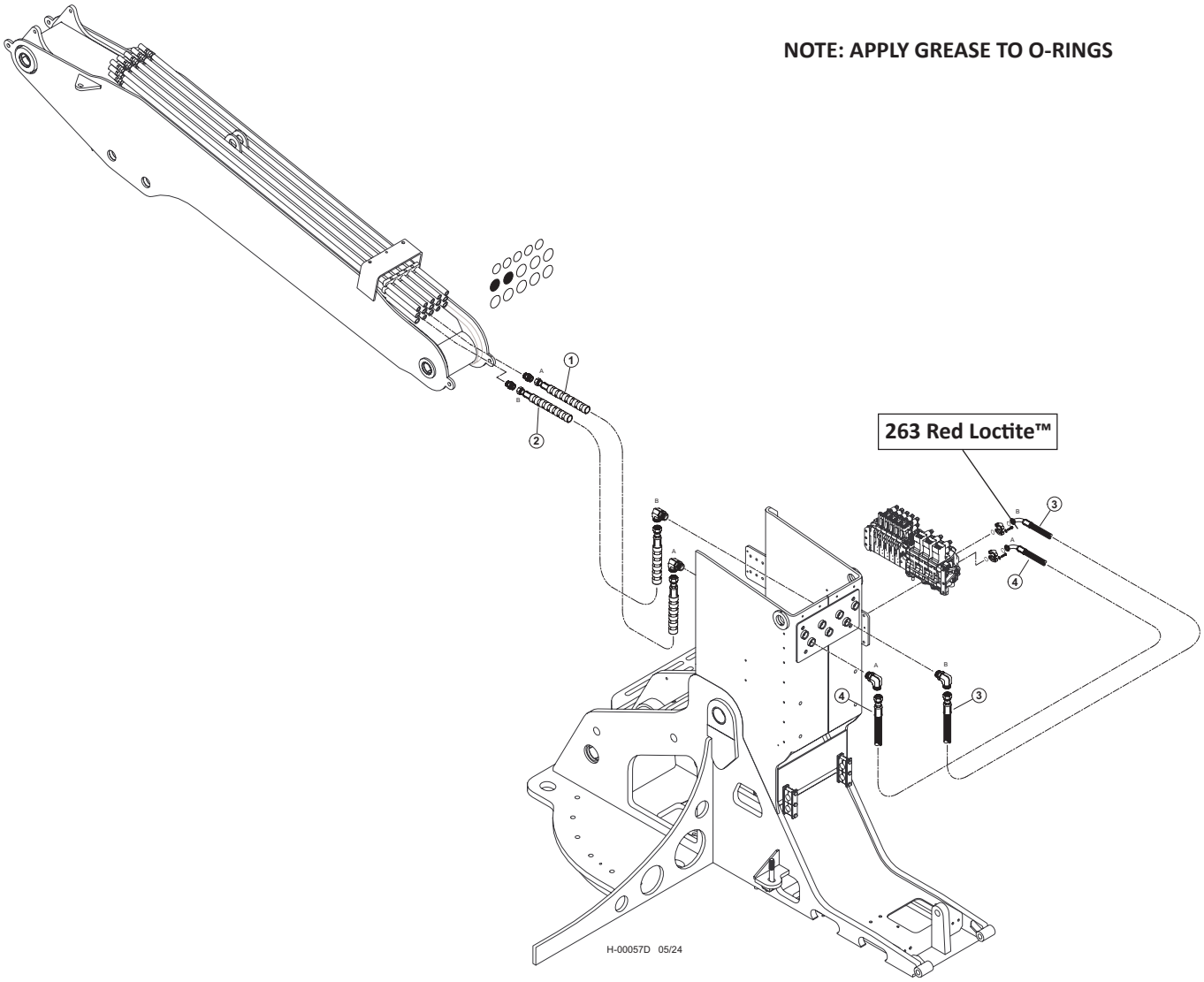


| Item | Part # | Description | Qty. |
|---|---|---|---|
| 1 | 57942 - (KIT) | HOSE ASSY - 722TC39 16-16OS-16OS-SW - (STICK CYLINDER “A”) | 1 |
| 2 | 57942 - (KIT) | HOSE ASSY - 722TC39 16-16OS-16OS-SW - (STICK CYLINDER “B”) | 1 |
| 3 | 57942 - (KIT) | HOSE ASSY - 722TC40 16-16OS-16PA9 - (STICK CYLINDER “B”) | 1 |
| 4 | 57942 - (KIT) | HOSE ASSY - 722TC39 16-16OS-16PA9 - (STICK CYLINDER “A”) | 1 |

# H200-00250 - DISC SAW PIPING - STICK BOOM (W450/W300 VALVE)
# MAIN VALVE TO BOOM

**NOTE: HYDRAULIC FITTINGS GET 545 LOCTITE™**

**NOTE: APPLY GREASE TO O-RINGS**

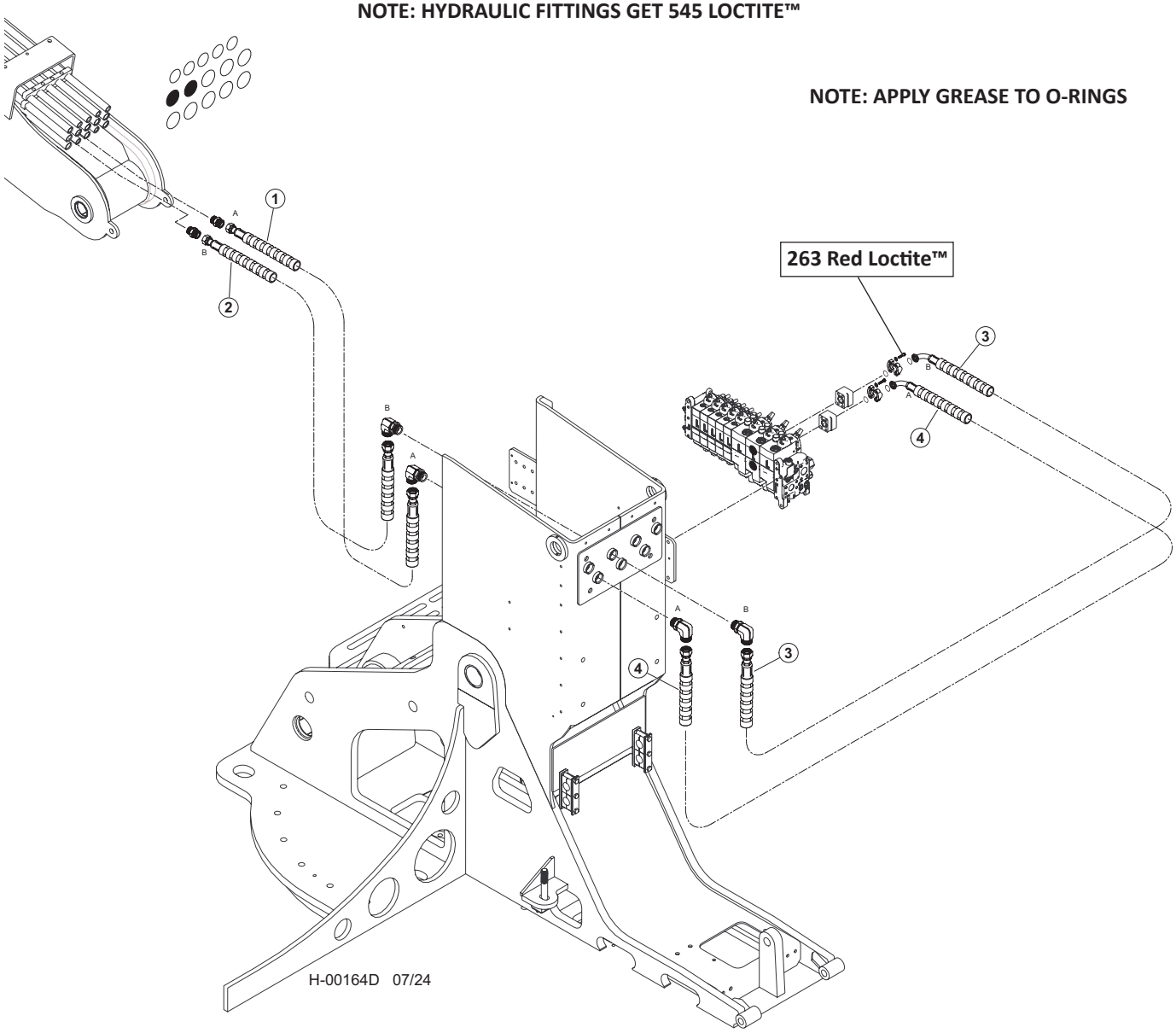


| Item | Part # | Description | Qty. |
|---|---|---|---|
| 1 | 65885 - (65878 - KIT) | HOSE, HYD, 787TC40 16-16OS-16OS-SW **("A" PORT - CHIMNEY TO BOOM)** | 1 |
| 2 | 65884 - (65878 - KIT) | HOSE, HYD, 787TC39 16-16OS-16OS-SW **("B" PORT - CHIMNEY TO BOOM)** | 1 |
| 3 | 65859 - (65856 - KIT) | HOSE, HYD, 787TC36.5 16-16OS-20PH9-SW **("B" PORT - VALVE TO CHIMNEY)** | 1 |
| 4 | 65615 - (65856 - KIT) | HOSE, HYD, 787TC36 16-16OS-20PH9-SW **("A" PORT - VALVE TO CHIMNEY)** | |

# H100-00540 - DISC SAW PIPING - CLAMP (K220/L90 VALVE) - MAIN VALVE TO BOOM

**NOTE: HYDRAULIC FITTINGS GET 545 LOCTITE™**

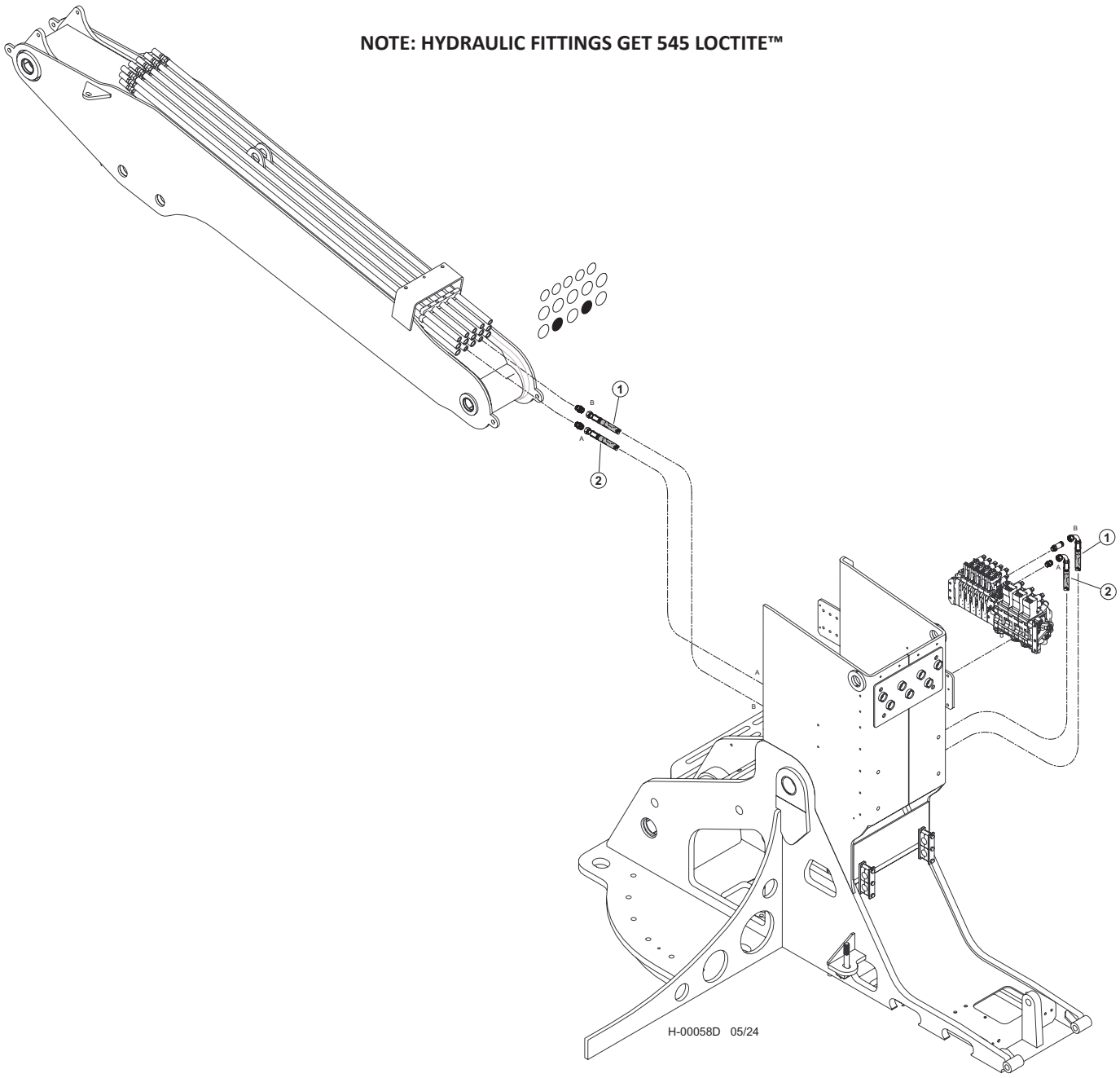


| Item | Part # | Description | Qty. |
|---|---|---|---|
| 1 | 57942 - (KIT) | HOSE ASSY - 722TC62 12-12OS-12O9-W - (CLAMP “B”) | 1 |
| 2 | 57942 - (KIT) | HOSE ASSY - 722TC64 12-12OS-12O9-W - (CLAMP “A”) | 1 |

# H200-00260 - DISC SAW PIPING - CLAMP (W450/W300 VALVE) - MAIN VALVE TO BOOM

**NOTE: HYDRAULIC FITTINGS GET 545 LOCTITE™**

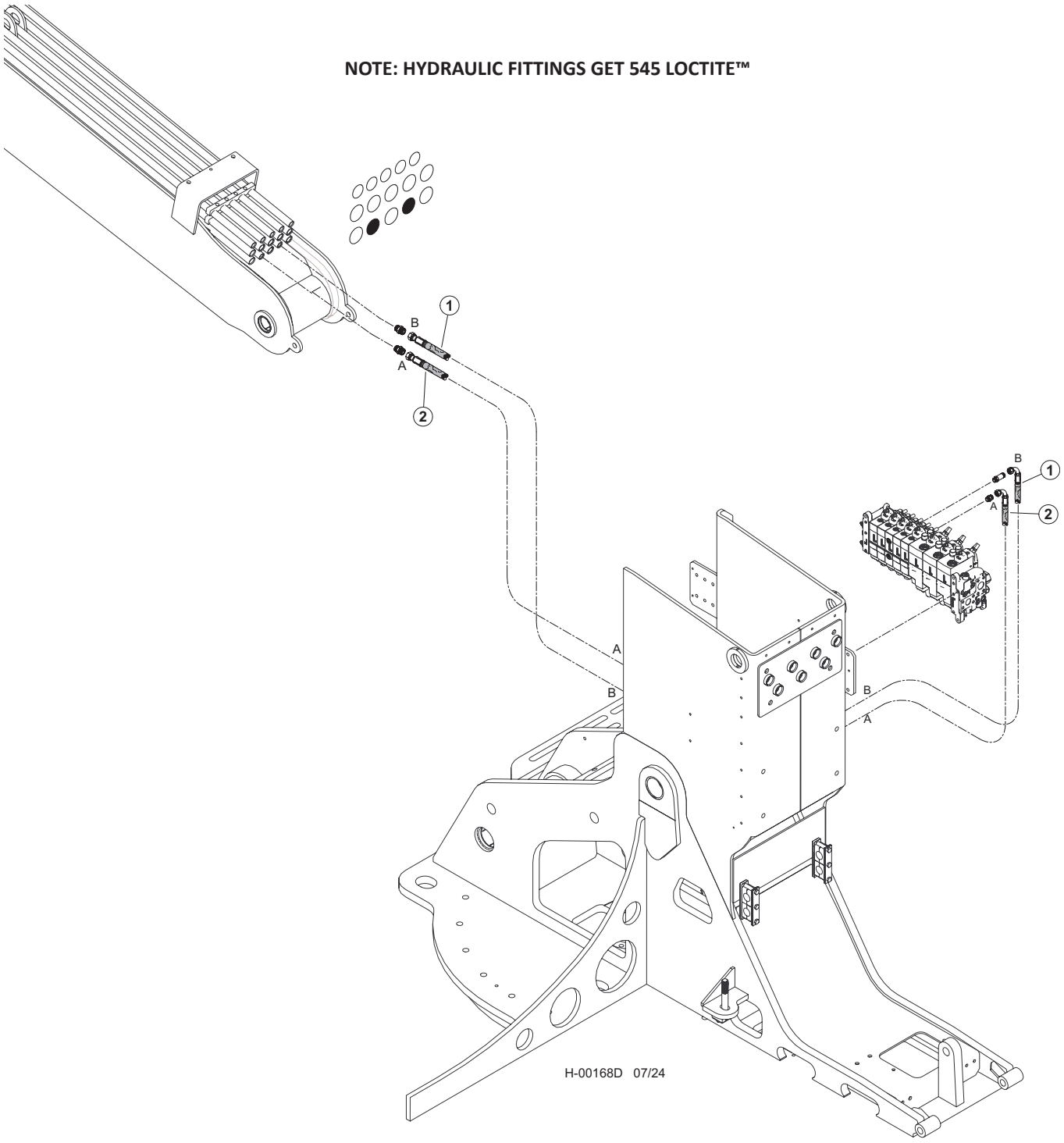


| Item | Part # | Description | Qty. |
|---|---|---|---|
| 1 | 65862 - (65856 - KIT) | HOSE, HYD, 722TC70.5 12-12OS-12O4-W - **(CLAMP "B")** | 1 |
| 2 | 65862 - (65856 - KIT) | HOSE, HYD, 722TC70.5 12-12OS-12O4-W - **(CLAMP "A")** | 1 |

# H100-00550 - DISC SAW PIPING - ACCUMULATOR (K220/L90 VALVE) MAIN VALVE TO BOOM)

**NOTE: HYDRAULIC FITTINGS GET 545 LOCTITE™**

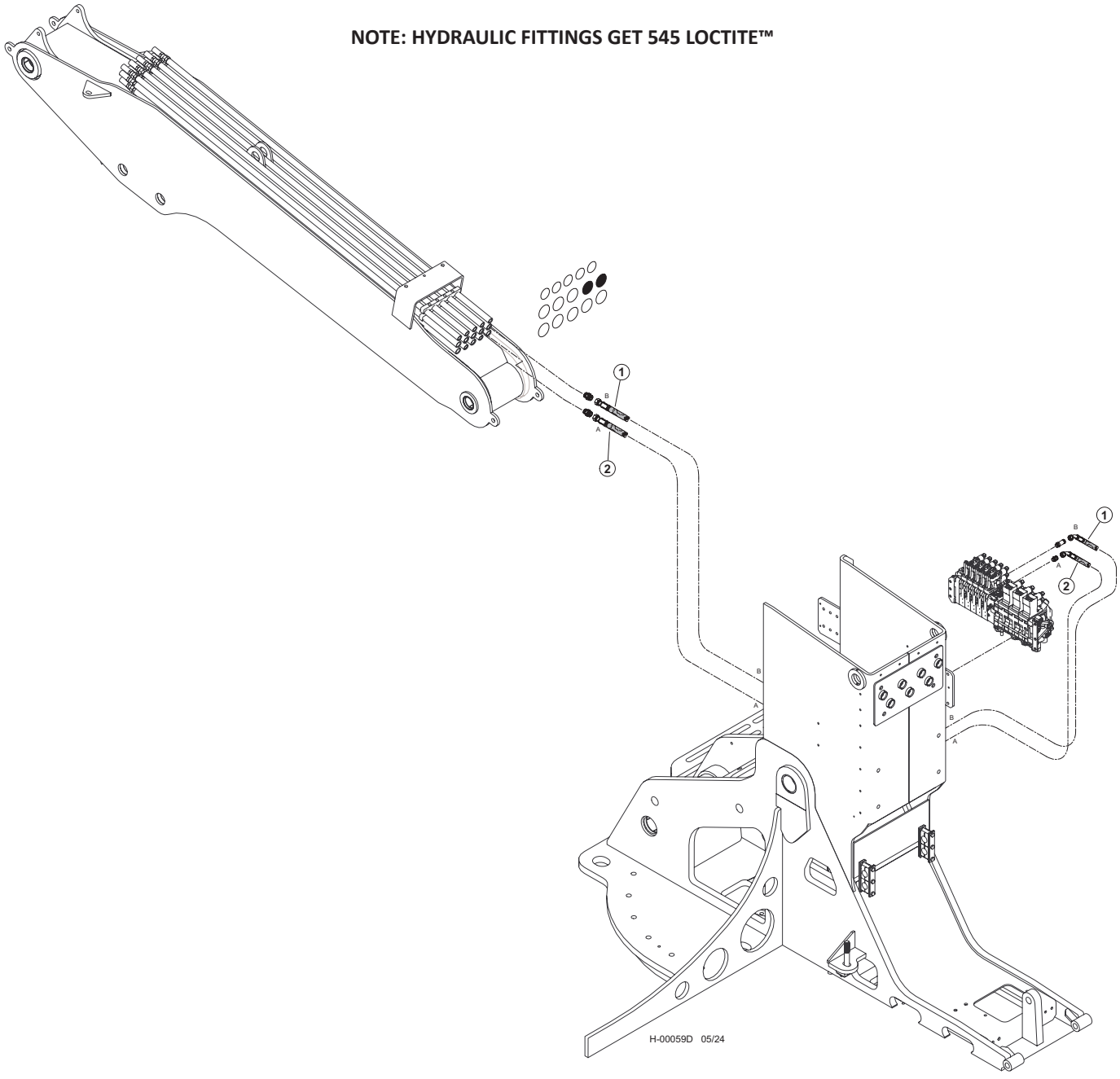


| Item | Part # | Description | Qty. |
|---|---|---|---|
| 1 | 57942 - (KIT) | HOSE ASSY - 722TC64 10-10OS-10O4-W **- (ACCUMULATOR "B")** | 1 |
| 2 | 57942 - (KIT) | HOSE ASSY - 722TC63 10-10OS-10O4-W **- (ACCUMULATOR "A")** | 1 |

# H200-00270 - DISC SAW PIPING - ACCUMULATOR (W450/W300 VALVE) MAIN VALVE TO BOOM)

**NOTE: HYDRAULIC FITTINGS GET 545 LOCTITE™**

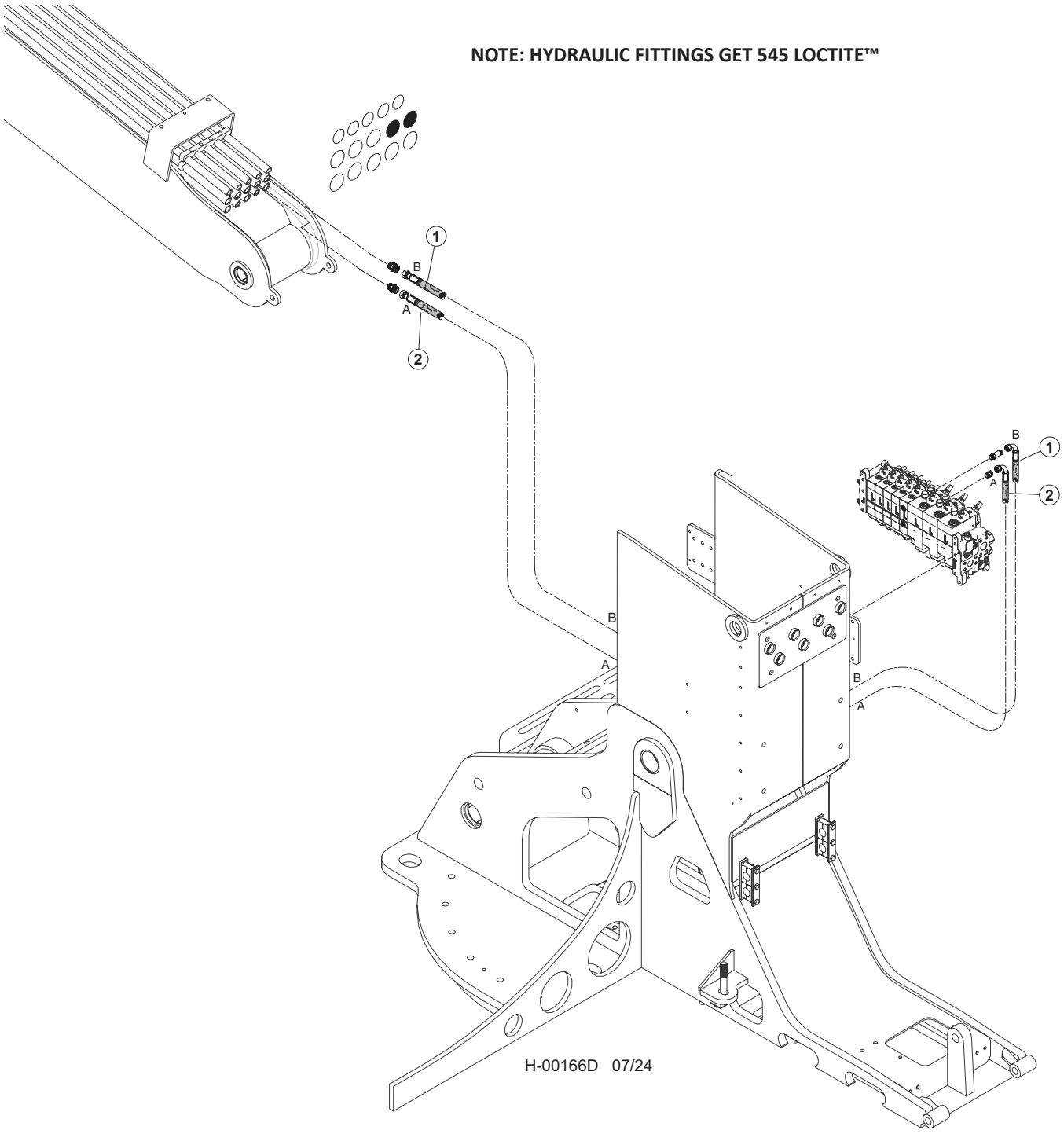


| Item | Part # | Description | Qty. |
|---|---|---|---|
| 1 | 65862 - (65856 - KIT) | HOSE, HYD, 722TC70.5 12-12OS-12O4-W - **(ACCUMULATOR "B")** | 1 |
| 2 | 65862 - (65856 - KIT) | HOSE, HYD, 722TC70.5 12-12OS-12O4-W - **(ACCUMULATOR "A")** | 1 |

# H100-00560 - DISC SAW PIPING - LATERAL TILT (K220/L90 VALVE)
# MAIN VALVE TO BOOM

**NOTE: HYDRAULIC FITTINGS GET 545 LOCTITE™**

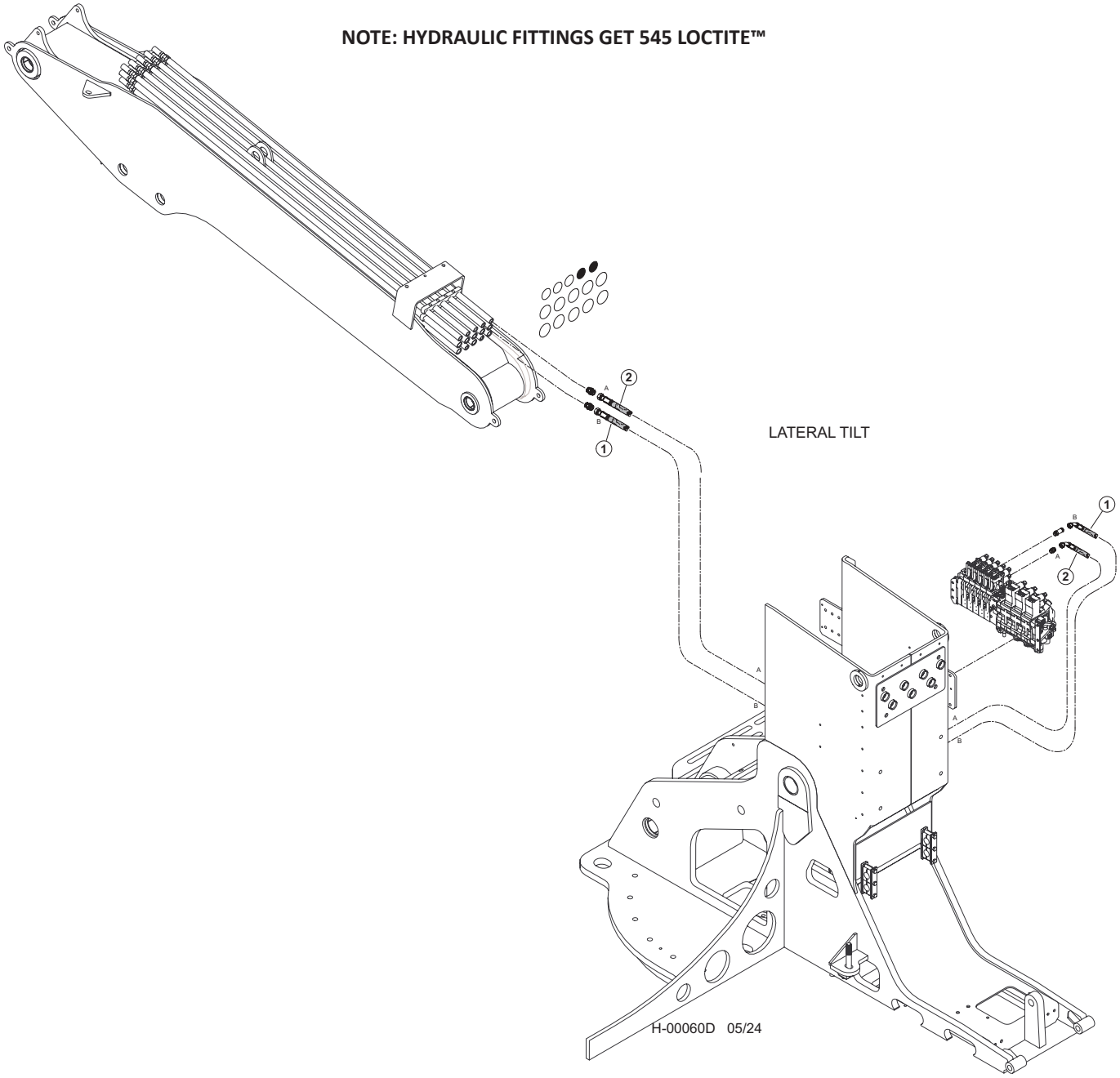


| Item | Part # | Description | Qty. |
|---|---|---|---|
| 1 | 57942 - (KIT) | HOSE ASSY - 722TC65 10-10OS-10O4-W - (LATERAL TILT “B”) | 1 |
| 2 | 57942 - (KIT) | HOSE ASSY - 722TC64 10-10OS-10O4-W - (LATERAL TILT “A”) | 1 |

# H200-00280 - DISC SAW PIPING - LATERAL TILT (W450/W300 VALVE)
# MAIN VALVE TO BOOM

**NOTE: HYDRAULIC FITTINGS GET 545 LOCTITE™**

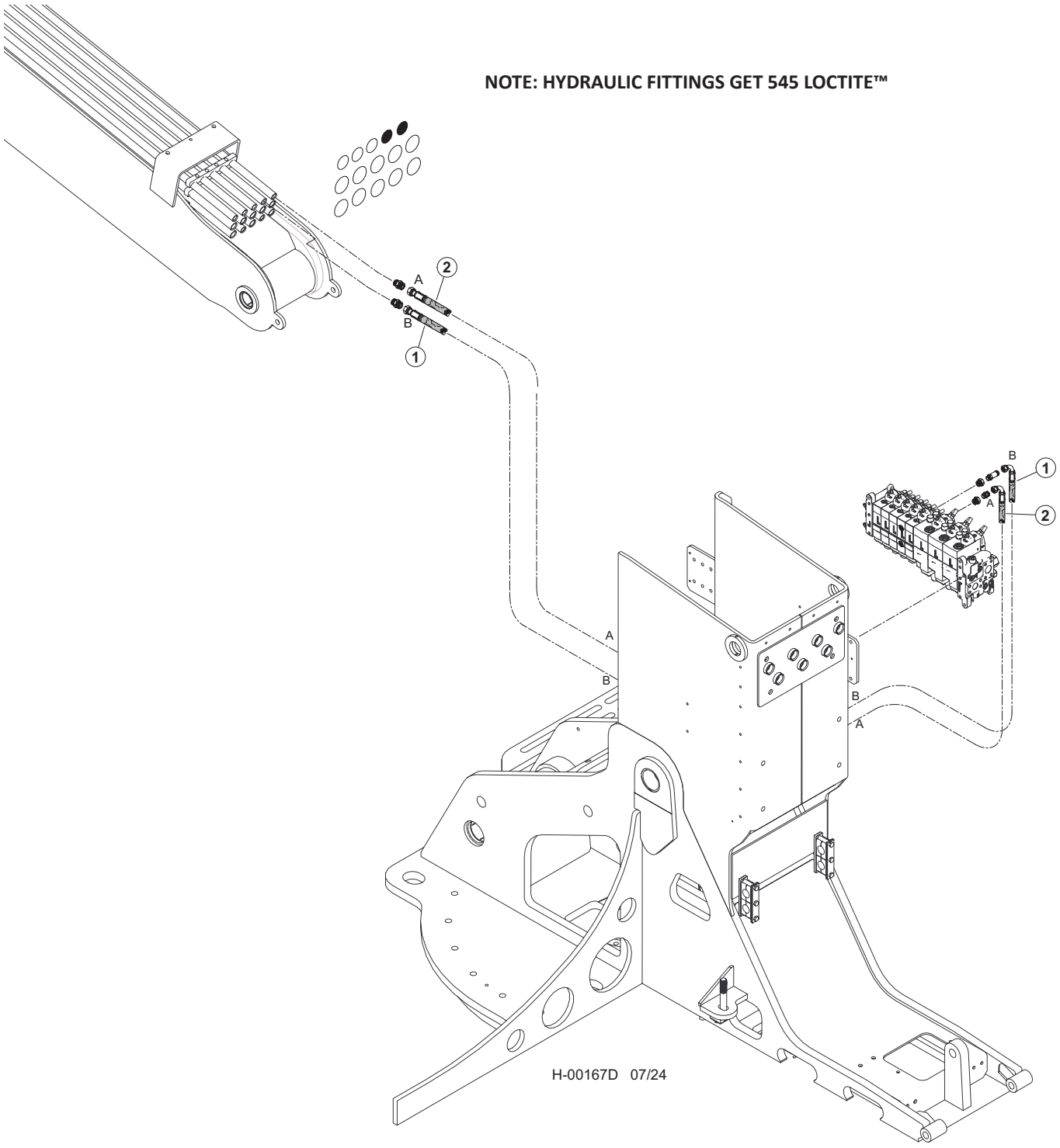


| Item | Part # | Description | Qty. |
|---|---|---|---|
| 1 | 65863 - (65856 - KIT) | HOSE, HYD, 722TC65.5 10-10OS-10O4-W **- (LATERAL TILT "B")** | 1 |
| 2 | 65863 - (65856 - KIT) | HOSE, HYD, 722TC65.5 10-10OS-10O4-W **- (LATERAL TILT "A")** | 1 |

# H100-00570 - DISC SAW PIPING - CAB LEVEL (K220/L90 VALVE) - MAIN VALVE TO BOOM

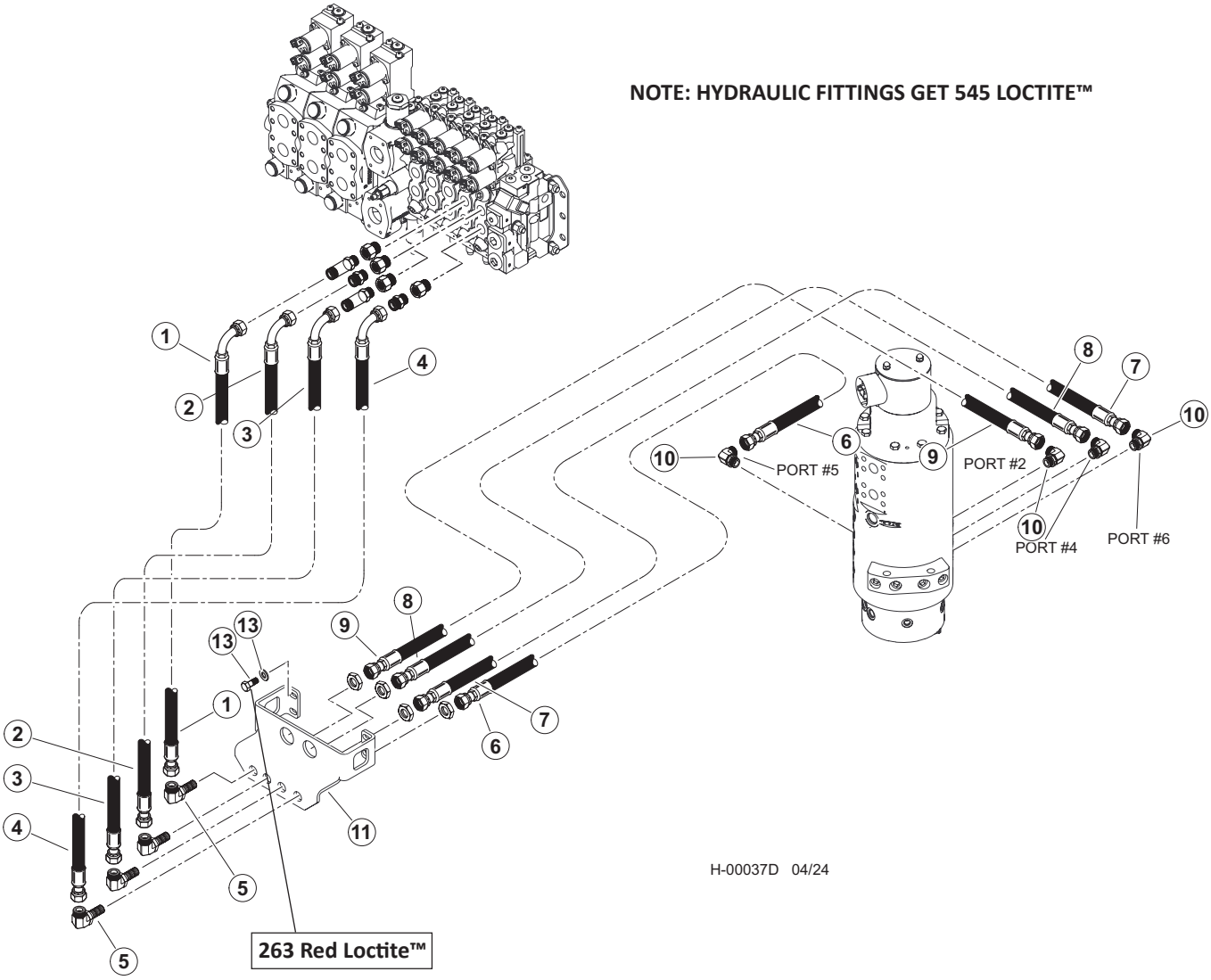


| Item | Part # | Description | Qty. |
|---|---|---|---|
| 1 | 57945 - (KIT) | HOSE ASSY - 787TC42 08-08OS-0809 - (VALVE PORT “B” TO BULKHEAD) | 1 |
| 2 | 57945 - (KIT) | HOSE ASSY - 787TC42 08-08OS-0809 - (VALVE PORT “B” TO BULKHEAD) | 1 |
| 3 | 57945 - (KIT) | HOSE ASSY - 787TC39 08-08OS-0809 - (VALVE PORT “A” TO BULKHEAD) | 1 |
| 4 | 57945 - (KIT) | HOSE ASSY - 787TC39 08-08OS-0809 - (VALVE PORT “A” TO BULKHEAD) | 1 |
| | 57947 | KIT, FITTING TRACK LEVEL-D SERIES | 1 |
| 5 | 24187 | ELBOW, 90 BULKHEAD - 855BH-TT-08 | 4 |
| 6 | 57945 - (KIT) | HOSE ASSY - 787TC30 08-08OS-080S - (BULKHEAD TO PORT #5 ON ROT MAN) | 1 |
| 7 | 57945 - (KIT) | HOSE ASSY - 787TC40 08-08OS-080S - (BULKHEAD TO PORT #6 ON ROT MAN) | 1 |
| 8 | 57945 - (KIT) | HOSE ASSY - 787TC41.5 08-08OS-080S - (BULKHEAD TO PORT #4 ON ROT MAN) | 1 |
| 9 | 57945 - (KIT) | HOSE ASSY - 787TC44 08-08OS-080S - (BULKHEAD TO PORT #2 ON ROT MAN) | 1 |
| 10 | 16360 | ELBOW, 90 - FF1868T-0808S | 4 |
| 11 | 60559 | BULHEAD, FRONT - TM | 1 |
| 12 | 15542 | BOLT - .375” X .75” | 2 |
| 13 | 15528 | WASHER, SAE FLAT - .375” OR 3/8” **263 RED LOCTITE™** | 2 |

# H200-00290 - DISC SAW PIPING - CAB LEVEL (W450/W300 VALVE)
# MAIN VALVE TO BOOM

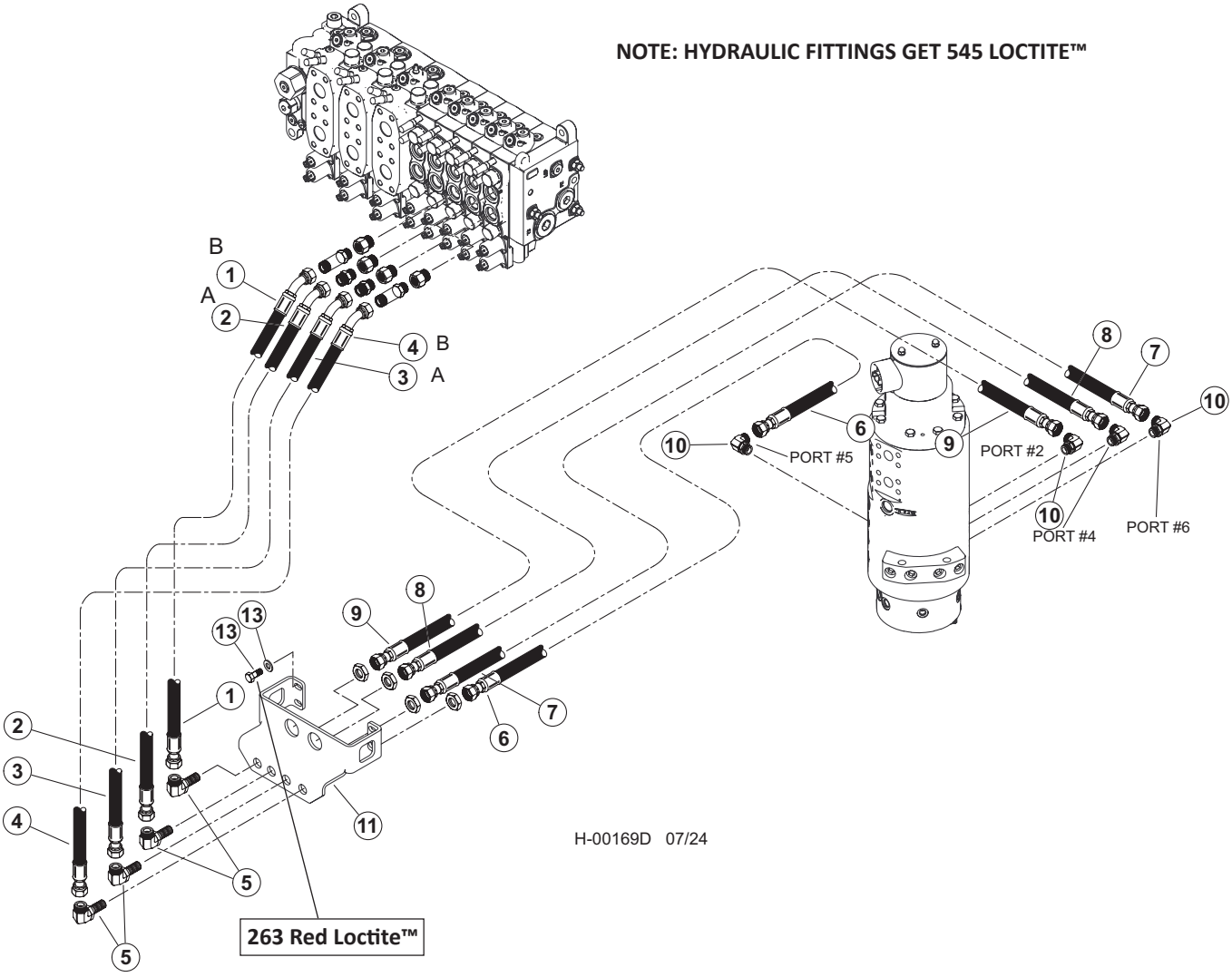


| Item | Part # | Description | Qty. |
|---|---|---|---|
| 1 | 65621 - (65619 - KIT) | HOSE, HYD, 787TC45 08-08OS-08O9 - **(VALVE PORT "B" TO BULKHEAD)** | 1 |
| 2 | 65621 - (65619 - KIT) | HOSE, HYD, 787TC45 08-08OS-08O9 - **(VALVE PORT "B" TO BULKHEAD)** | 1 |
| 3 | 65620 - (65619 - KIT) | HOSE, HYD, 787TC40.5 08-08OS-08O9 - **(VALVE PORT "A" TO BULKHEAD)** | 1 |
| 4 | 65620 - (65619 - KIT) | HOSE, HYD, 787TC40.5 08-08OS-08O9 - **(VALVE PORT "A" TO BULKHEAD)** | 1 |
| | 57947 | KIT, FITTING TRACK LEVEL-D SERIES | 1 |
| 5 | 24187 | ELBOW, 90 BULKHEAD - 855BH-TT-08 | 4 |
| 6 | 65892 - (65891 - KIT) | HOSE ASSY - 787TC30 08-08OS-080S - **(BULKHEAD TO PORT #5 ON ROT MAN)** | 1 |
| 7 | 65893 - (65891 - KIT) | HOSE ASSY - 787TC40 08-08OS-080S - **(BULKHEAD TO PORT #6 ON ROT MAN)** | 1 |
| 8 | 65894 - (65891 - KIT) | HOSE ASSY - 787TC41.5 08-08OS-080S - **(BULKHEAD TO PORT #4 ON ROT MAN)** | 1 |
| 9 | 65895 - (65891 - KIT) | HOSE ASSY - 787TC44 08-08OS-080S - **(BULKHEAD TO PORT #2 ON ROT MAN)** | 1 |
| 10 | 16360 | ELBOW, 90 - FF1868T-0808S | 4 |
| 11 | 60559 | BULHEAD, FRONT - TM | 1 |
| 12 | 15542 | BOLT - .375" X .75" | 2 |
| 13 | 15528 | WASHER, SAE FLAT - .375" OR 3/8" **263 RED LOCTITE™** | 2 |

# H200-00300 - DISC SAW PIPING - MAIN BOOM CYLINDER (W450/W300 VALVE) (BULKHEAD FITTING TO CYLINDER)

**NOTE: HYDRAULIC FITTINGS GET 545 LOCTITE™**

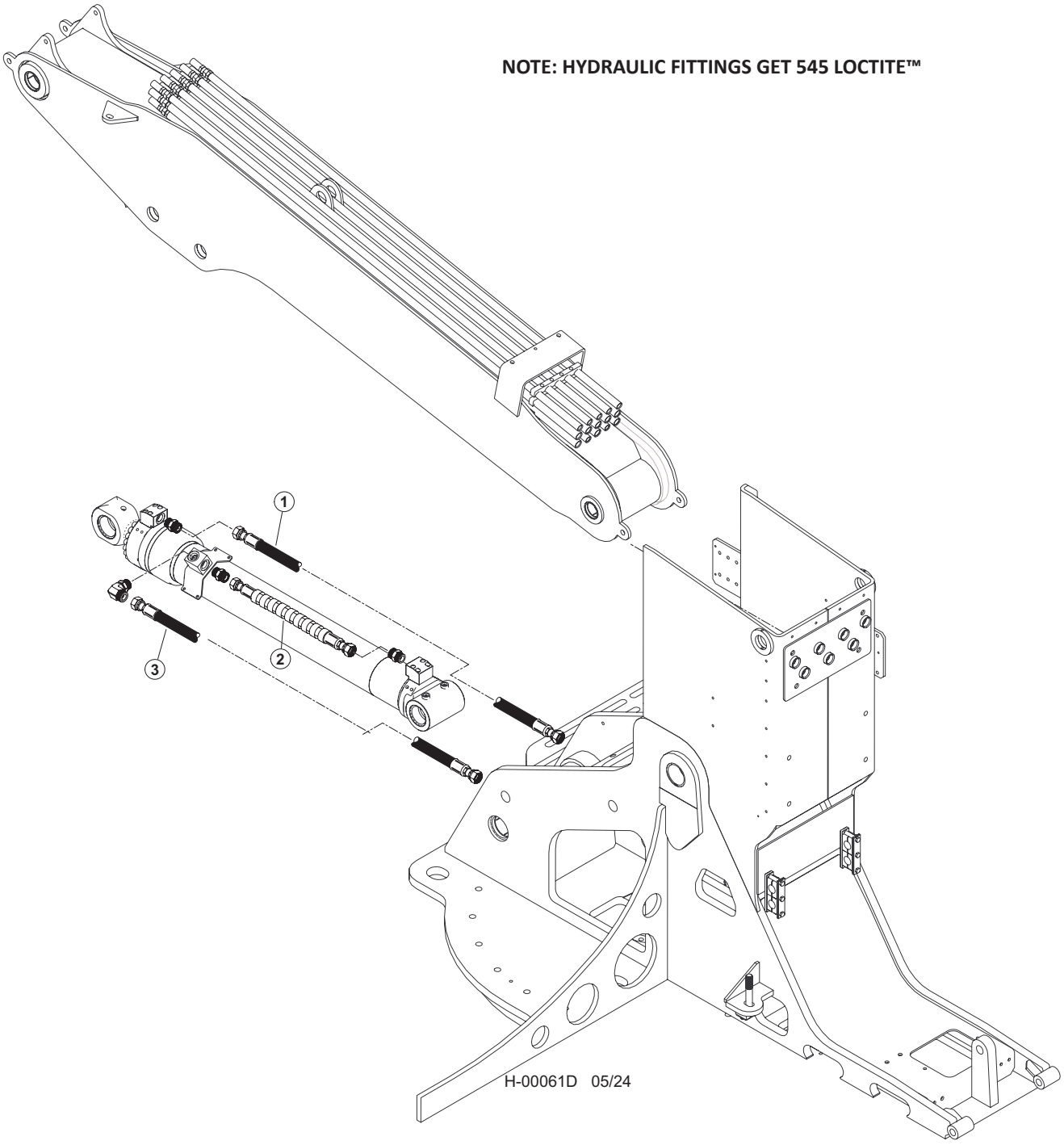


| Item | Part # | Description | Qty. |
|---|---|---|---|
| 1 | 65802 - (65799 - KIT) | HOSE, HYD, 787TC70 16-16OS-16OS - **(ROD END OF BOOM CYLINDER)** | 1 |
| 2 | 65800 - (65799 - KIT) | HOSE, HYD, 787TC45.5 16-16OS-16OS-SW - **(BASE END OF BOOM CYLINDER TO BLOCK)** | 1 |
| 3 | 65801 - (65799 - KIT) | HOSE, HYD, 787TC60 16-16OS-16OS - **(BASE END OF BOOM CYLINDER)** | 1 |

# H100-00580 - DISC SAW PIPING - TOOL TILT (MAIN BOOM TO CYLINDER)

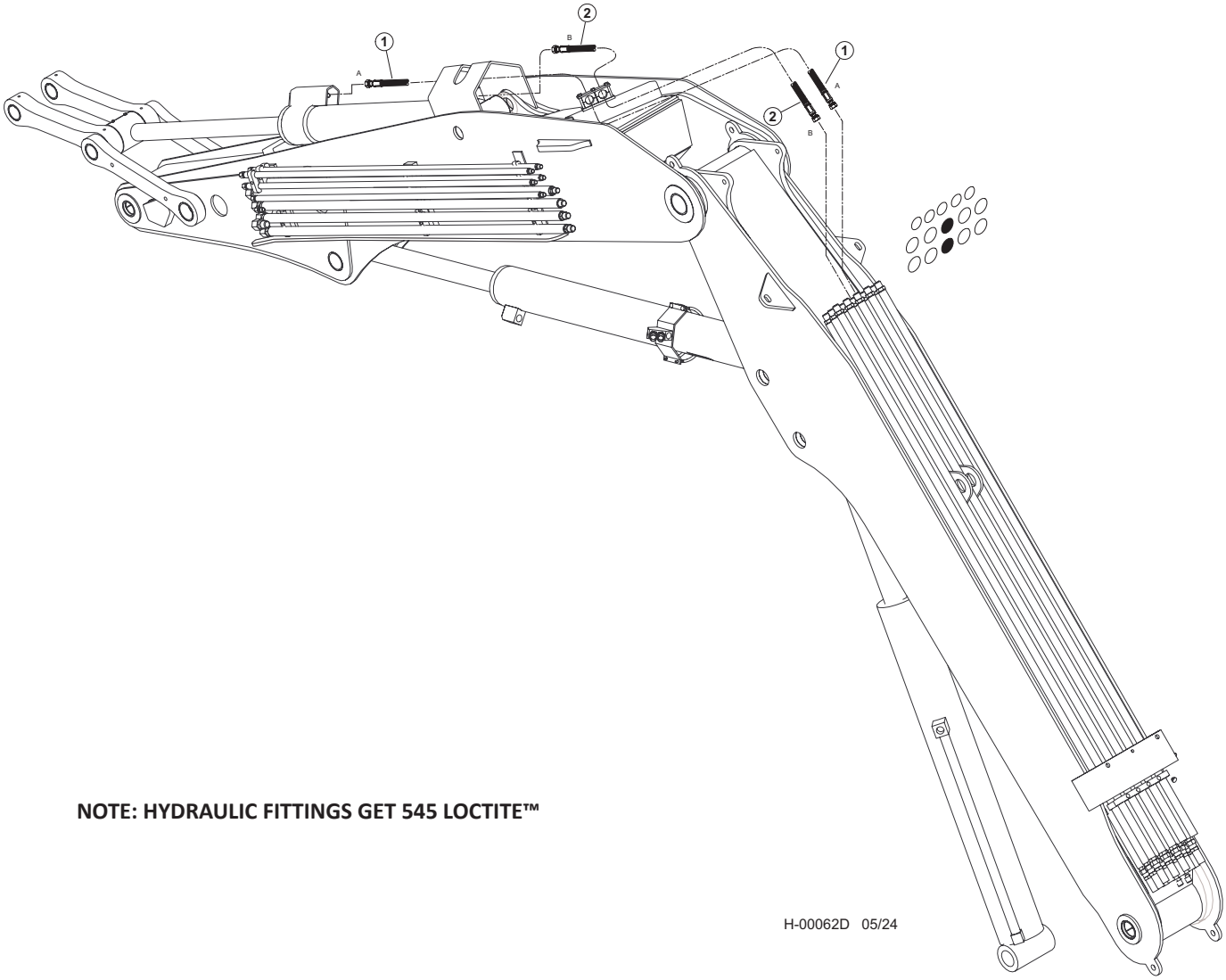


**NOTE: HYDRAULIC FITTINGS GET 545 LOCTITE™**

| Item | Part # | Description | Qty. |
|---|---|---|---|
| 1 | 65847 - (65837 - (KIT) | HOSE, HYD, 787TC160 16-16OS-16OS - **(TOOL CYLINDER "A")** | 1 |
| 2 | 65846 - (65837 - (KIT) | HOSE, HYD, 787TC108 16-16OS-16OS - **(TOOL CYLINDER "B")** | 1 |

# H100-00590 - DISC SAW PIPING - STICK BOOM (MAIN BOOM TO STICK CYLINDER)

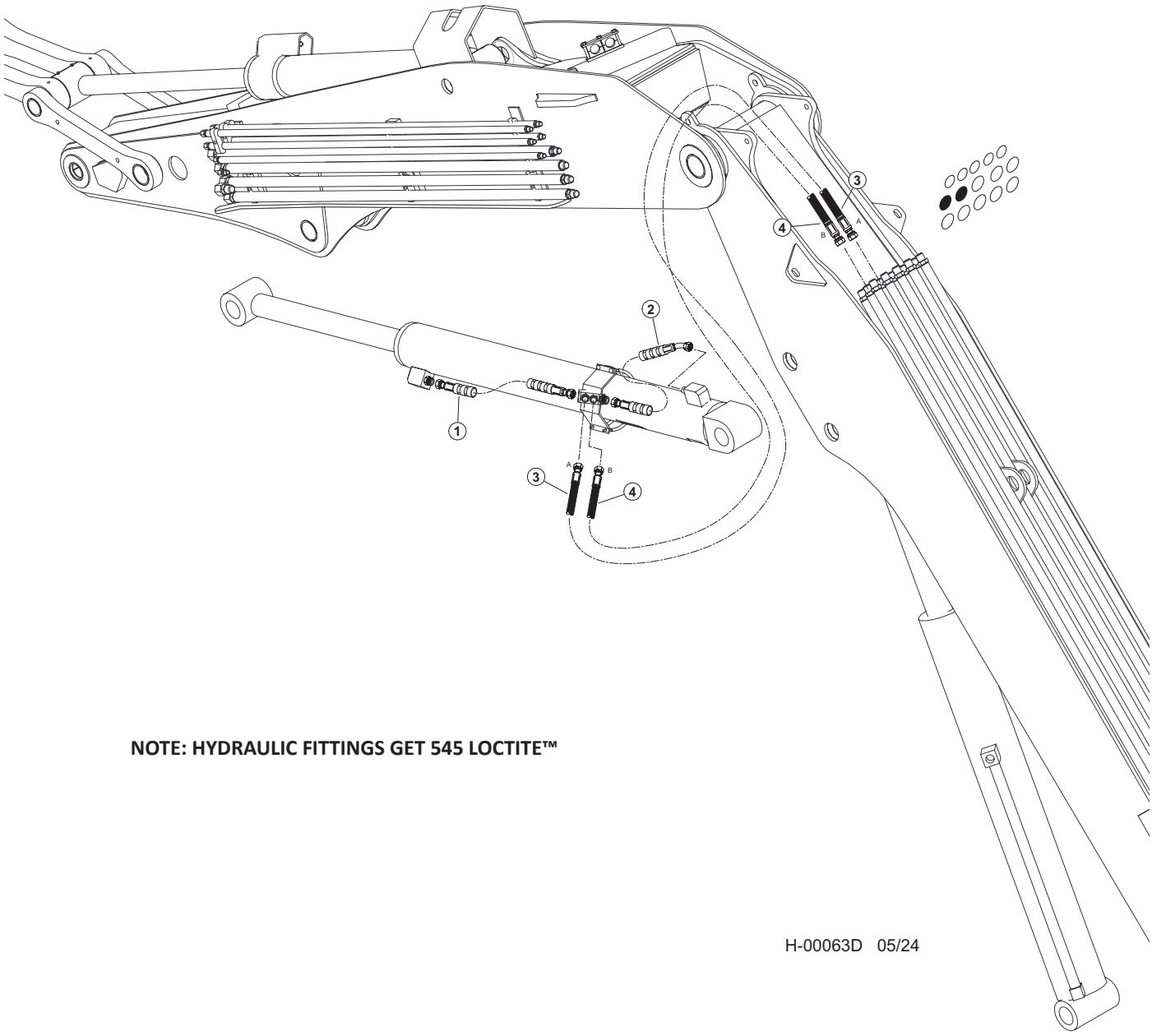


**NOTE: HYDRAULIC FITTINGS GET 545 LOCTITE™**

H-00063D 05/24

| Item | Part # | Description | Qty. |
|---|---|---|---|
| 1 | 65855 | HOSE, HYD, 787TC38 16-16OS-16OS-SW - **(STICK CYLINDER ROD)** | 1 |
| 2 | 65853 | HOSE, HYD, 787TC17 16-16OS-16O4-SW - **(STICK CYLINDER BASE)** | 1 |
| 3 | 65848 - (65837 - KIT) | HOSE, HYD, 787TC79 16-16OS-16OS - **(STICK CYLINDER ROD - "A")** | 1 |
| 4 | 65849 - (65837 - KIT) | HOSE, HYD, 787TC81 16-16OS-16OS - **(STICK CYLINDER BASE - "B")** | 1 |

# H100-00600 - DISC SAW PIPING - CLAMP (MAIN BOOM TO STICK BOOM)

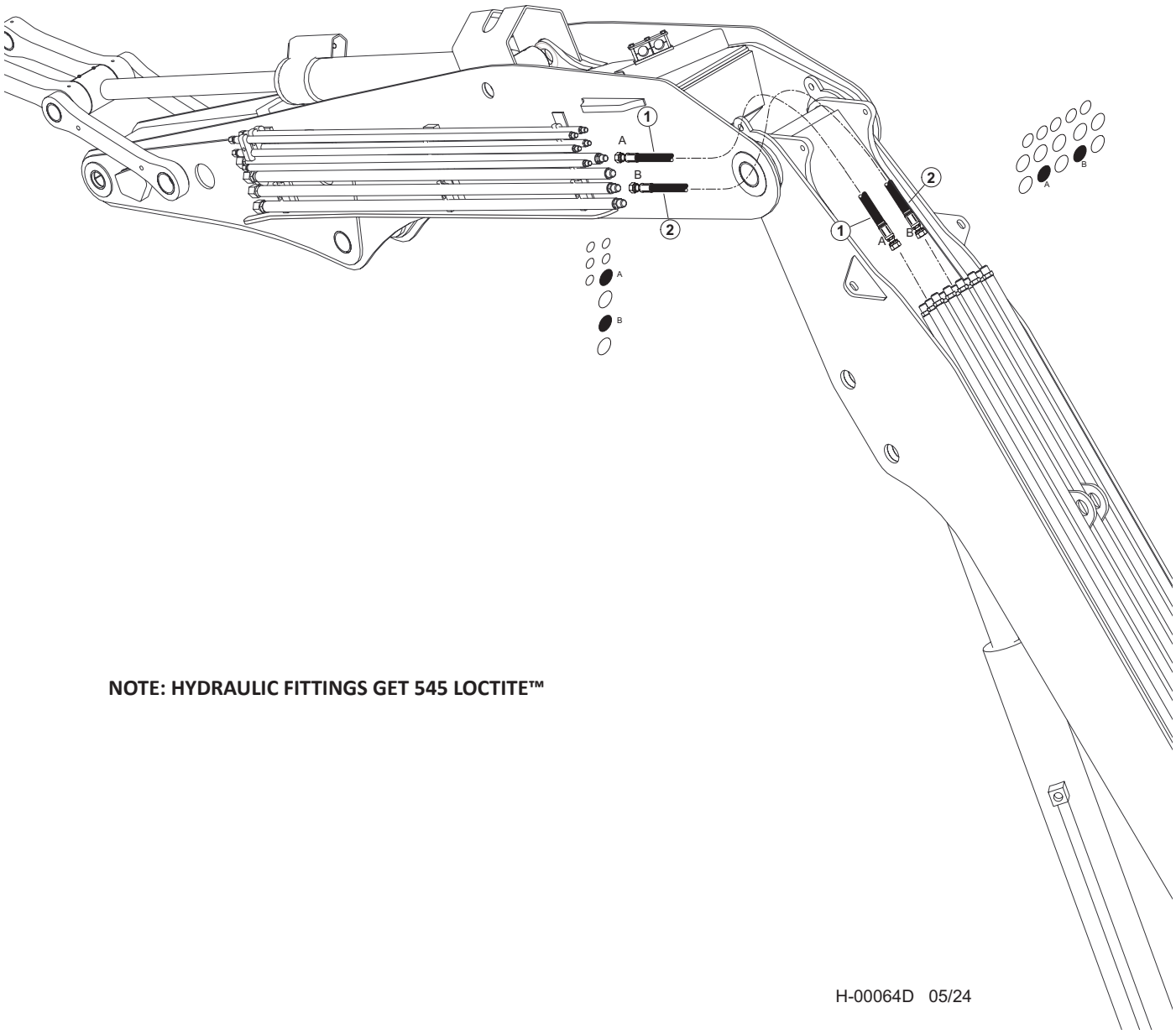


**NOTE: HYDRAULIC FITTINGS GET 545 LOCTITE™**

H-00064D 05/24

| Item | Part # | Description | Qty. |
|---|---|---|---|
| 1 | 65844 - (65837 - (KIT) | HOSE, HYD, 722TC72 12-12OS-12OS **- (CLAMP "A")** | 1 |
| 2 | 65845 - (65837 - (KIT) | HOSE, HYD, 722TC76 12-12OS-12OS **- (CLAMP "B")** | 1 |

# H100-00610 - DISC SAW PIPING - ACCUMULATOR (MAIN BOOM TO STICK BOOM)

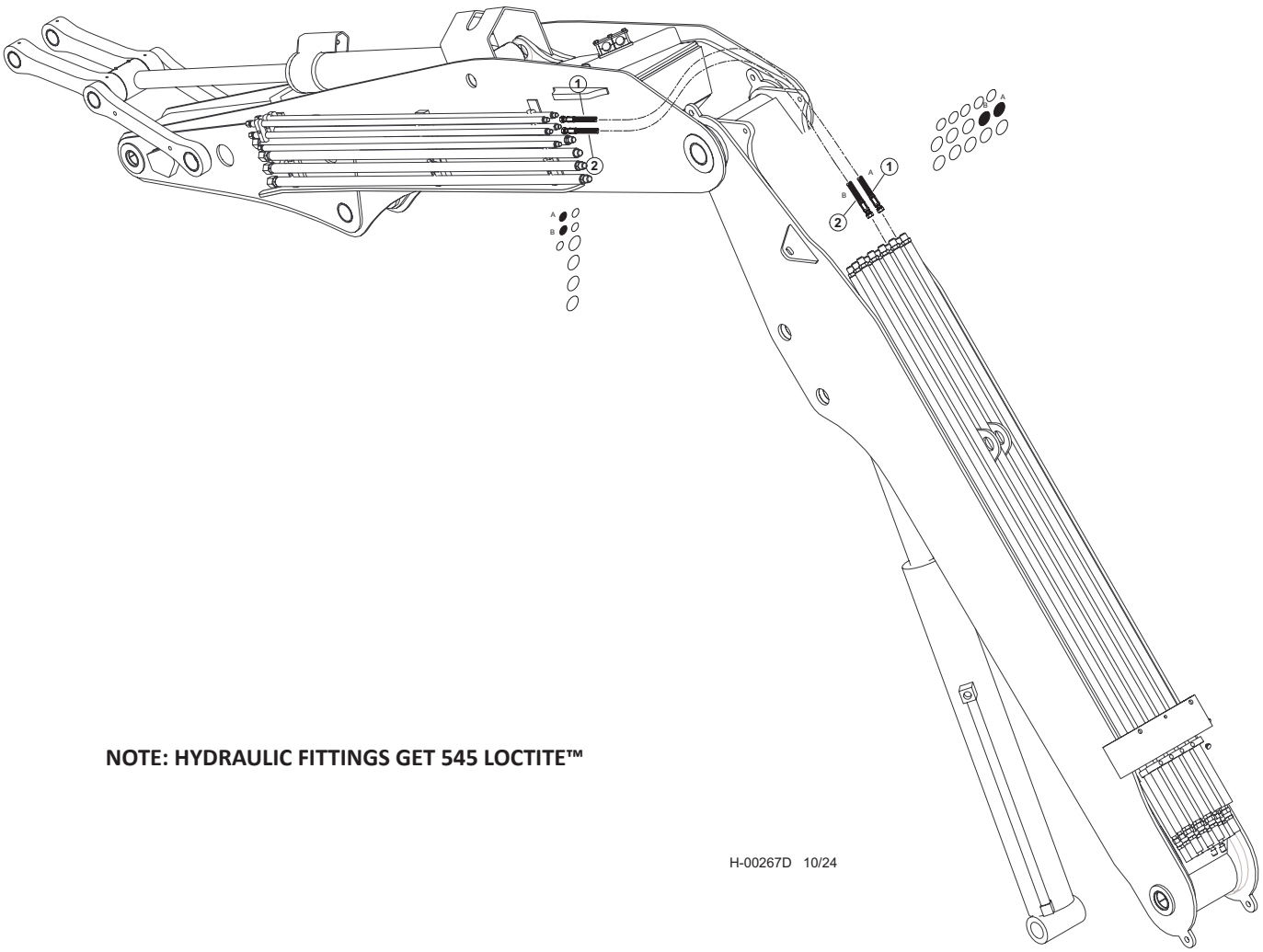


**NOTE: HYDRAULIC FITTINGS GET 545 LOCTITE™**

H-00267D 10/24

| Item | Part # | Description | Qty. |
|---|---|---|---|
| 1 | 65841 - (65837 - KIT) | HOSE, HYD, 722TC80.5 10-10OS-10OS **- (ACCUMULATOR "A")** | 1 |
| 2 | 65841 - (65837 - KIT) | HOSE, HYD, 722TC80.5 10-10OS-10OS **- (ACCUMULATOR "B")** | 1 |

# H100-00620 - DISC SAW PIPING - LATERAL TILT (MAIN BOOM TO STICK BOOM)

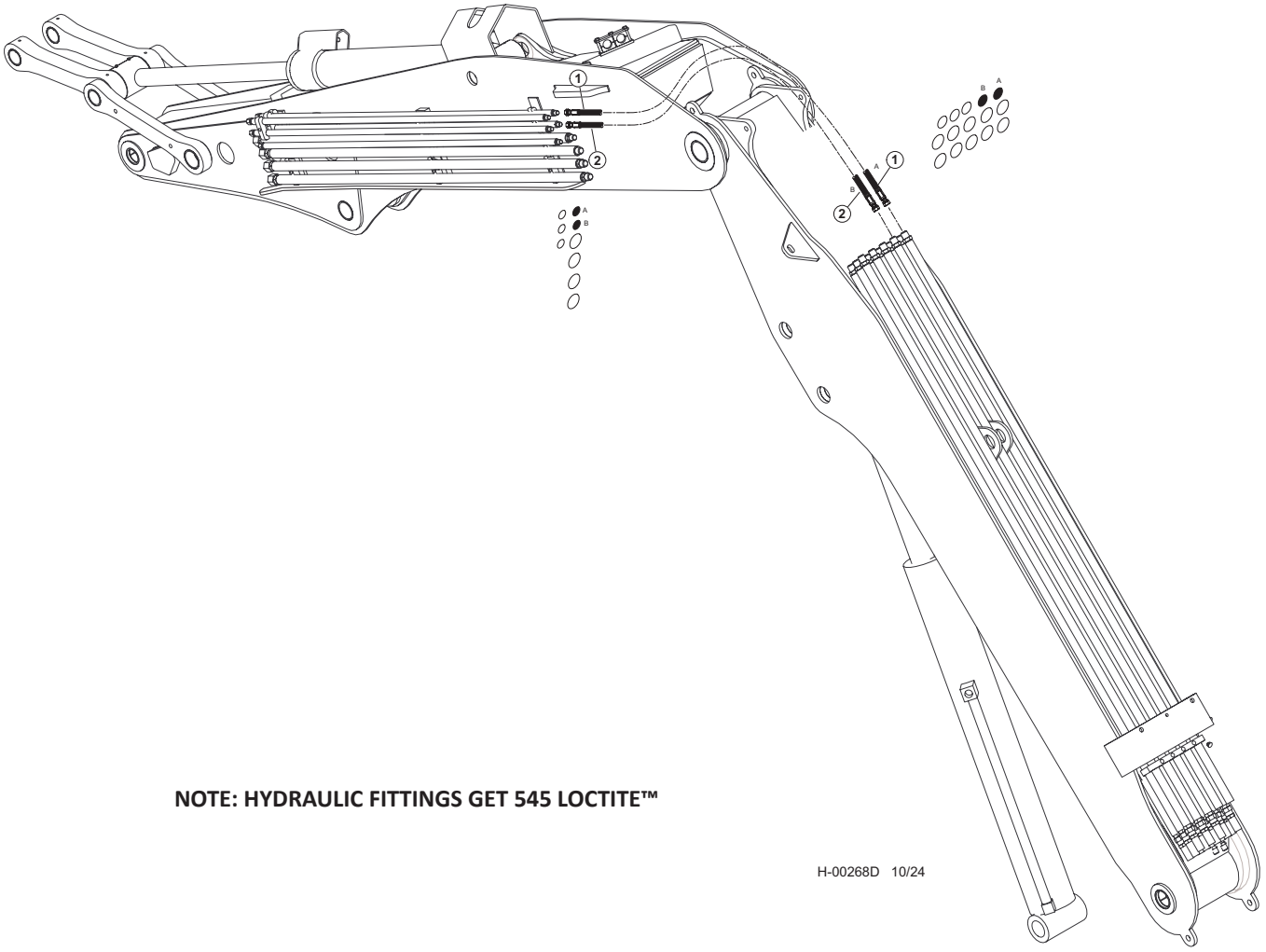


**NOTE: HYDRAULIC FITTINGS GET 545 LOCTITE™**

| Item | Part # | Description | Qty. |
|---|---|---|---|
| 1 | 65843 - (65837 - KIT) | HOSE, HYD, 722TC82.5 10-10OS-10OS **- (LATERAL TILT "A")** | 1 |
| 2 | 65843 - (65837 - KIT) | HOSE, HYD, 722TC82.5 10-10OS-10OS **- (LATERAL TILT "B")** | 1 |

# H100-00630 - DISC SAW PIPING - PRESSURE & RETURN (MAIN BOOM TO STICK BOOM)

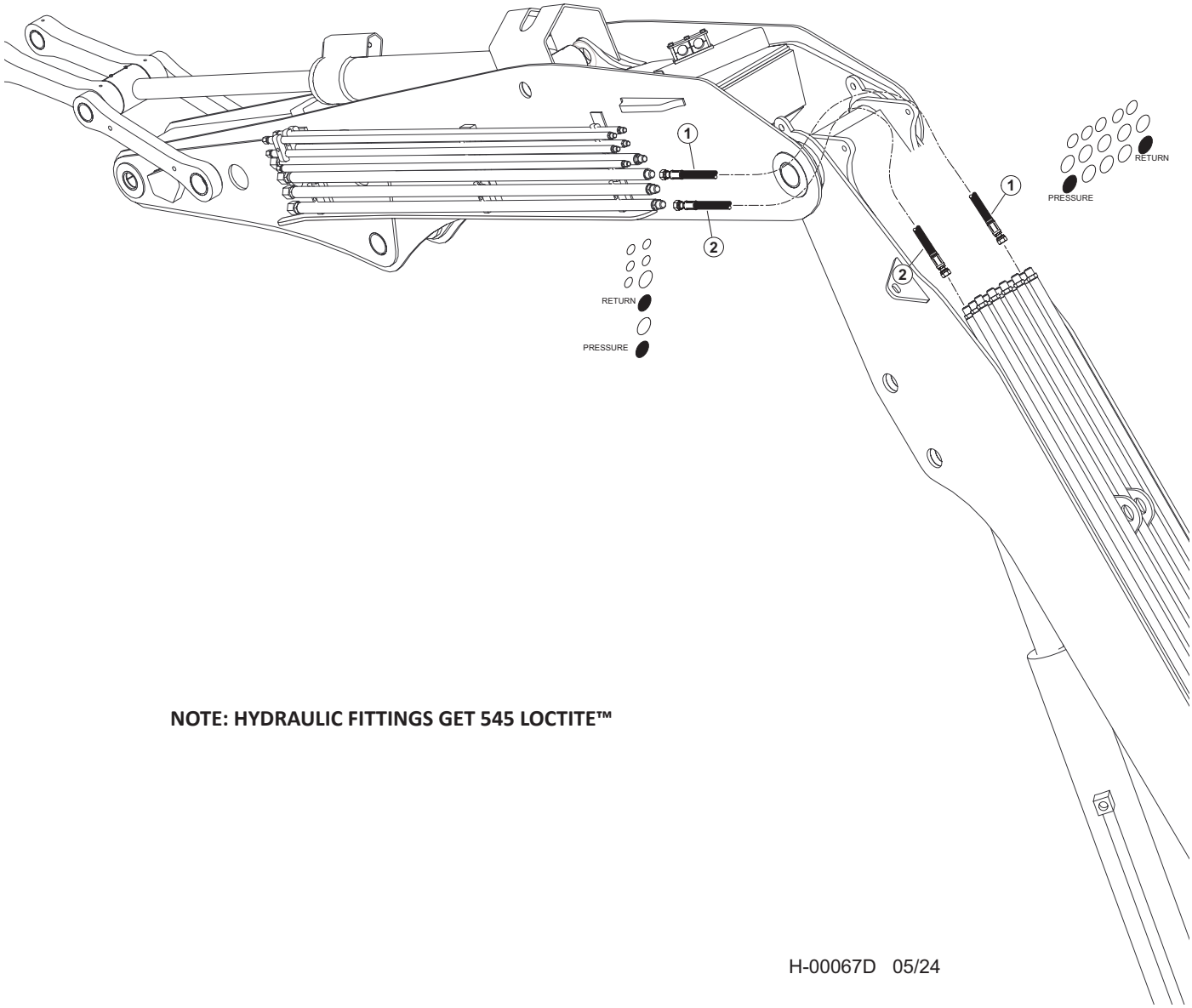


**NOTE: HYDRAULIC FITTINGS GET 545 LOCTITE™**

H-00067D 05/24

| Item | Part # | Description | Qty. |
|---|---|---|---|
| 1 | 65851 - (65837 - (KIT) | HOSE, HYD, 722TC77 16-16OS-16OS - **(RETURN)** | 1 |
| 2 | 65802 - (65837 - (KIT) | HOSE, HYD, 787TC70 16-16OS-16OS - **(PRESSURE)** | 1 |

# H100-00640 - DISC SAW PIPING - CASE DRAIN (MAIN BOOM TO STICK BOOM)

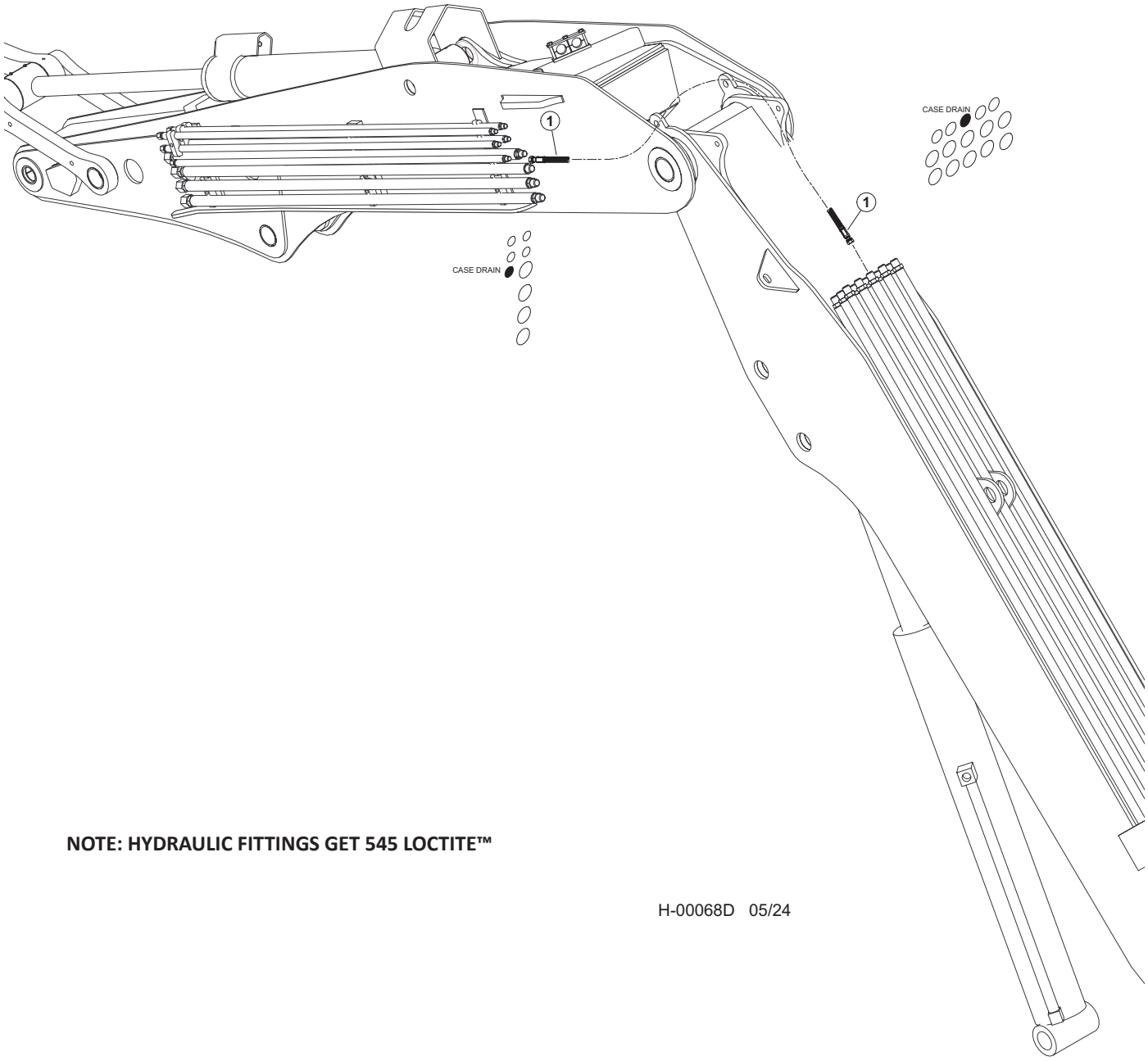


**NOTE: HYDRAULIC FITTINGS GET 545 LOCTITE™**

H-00068D 05/24

| Item | Part # | Description | Qty. |
|---|---|---|---|
| 1 | 65839 - (65837 - KIT) | HOSE, HYD, 722TC79.5 08-08OS-08OS **- (CASE DRAIN)** | 1 |

# H100-00650 - DISC SAW PIPING - LIGHT WIRE (MAIN BOOM TO STICK BOOM)

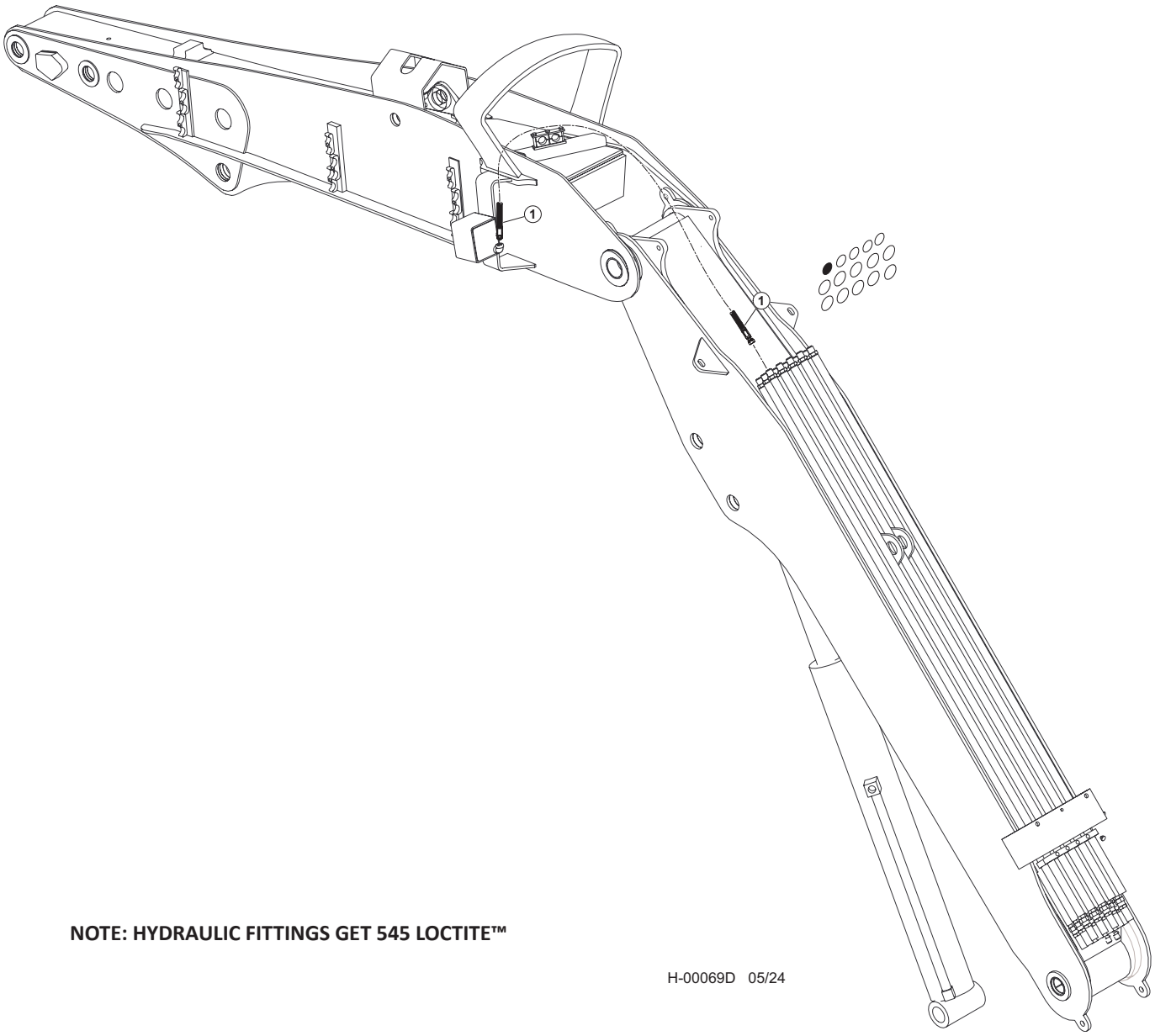


**NOTE: HYDRAULIC FITTINGS GET 545 LOCTITE™**

H-00069D 05/24

| Item | Part # | Description | Qty. |
|---|---|---|---|
| 1 | 65838 - (65837 - KIT) | HOSE, HYD, 387TC84 06-06OS-08PS **- (LIGHT WIRE)** | 1 |

# H100-00660 - DISC SAW PIPING - GREASE HOSES (MAIN BOOM TO STICK BOOM)

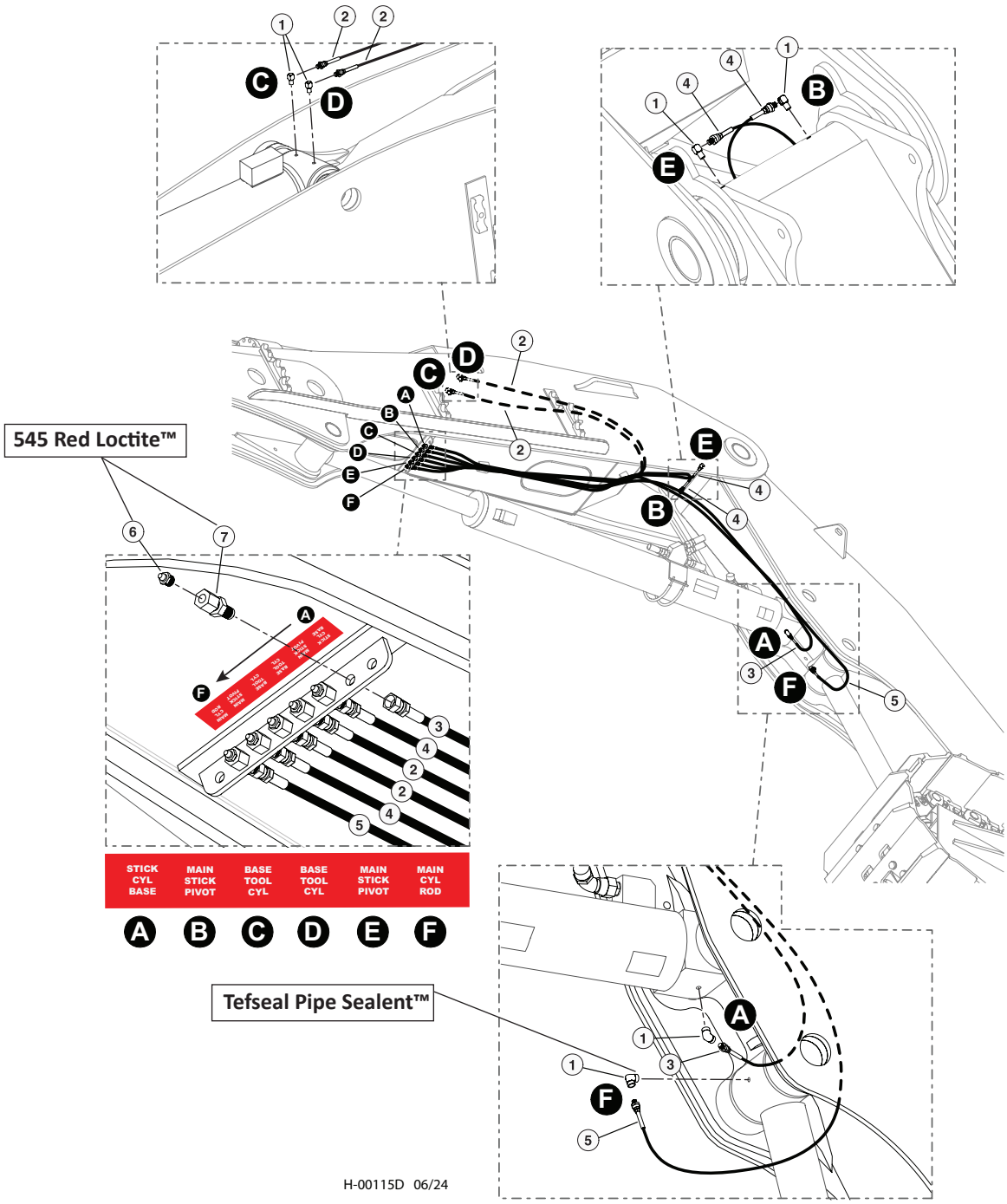


| Item | Part # | Description | Qty. |
|---|---|---|---|
| 1 | 22281 | FITTING, 90° - 5546132 **TEFSEAL PIPE SEALANT™** | 4 |
| 2 | 55605 - (KIT) | HOSE ASSY - 2133-02-02PS-04JS (TOOL CYL BASE) | 2 |
| 3 | 55605 - (KIT) | HOSE ASSY - 2138-02-02PS-04JS (STICK CYL BASE) | 1 |
| 4 | 55605 - (KIT) | HOSE ASSY - 2188-02-02PS-04JS (MAIN/STICK PIVOT) | 2 |
| 5 | 55605 - (KIT) | HOSE ASSY - 2147-02-02PS-04JS (MAIN CYL ROD) | 1 |
| 6 | 15658 | CONNECTOR, STRAIGHT BULKHEAD - 2239-2-4S **545 RED LOCTITE™** | 6 |
| 7 | 10704 | FITTING, STRAIGHT GREASE - 1/8” PIPE THREAD **545 RED LOCTITE™** | 6 |

# H100-00670 - MAIN BOOM PIPING - DISC SAW/BAR SAW COMBO

**NOTE: HYDRAULIC FITTINGS GET 545 LOCTITE™**

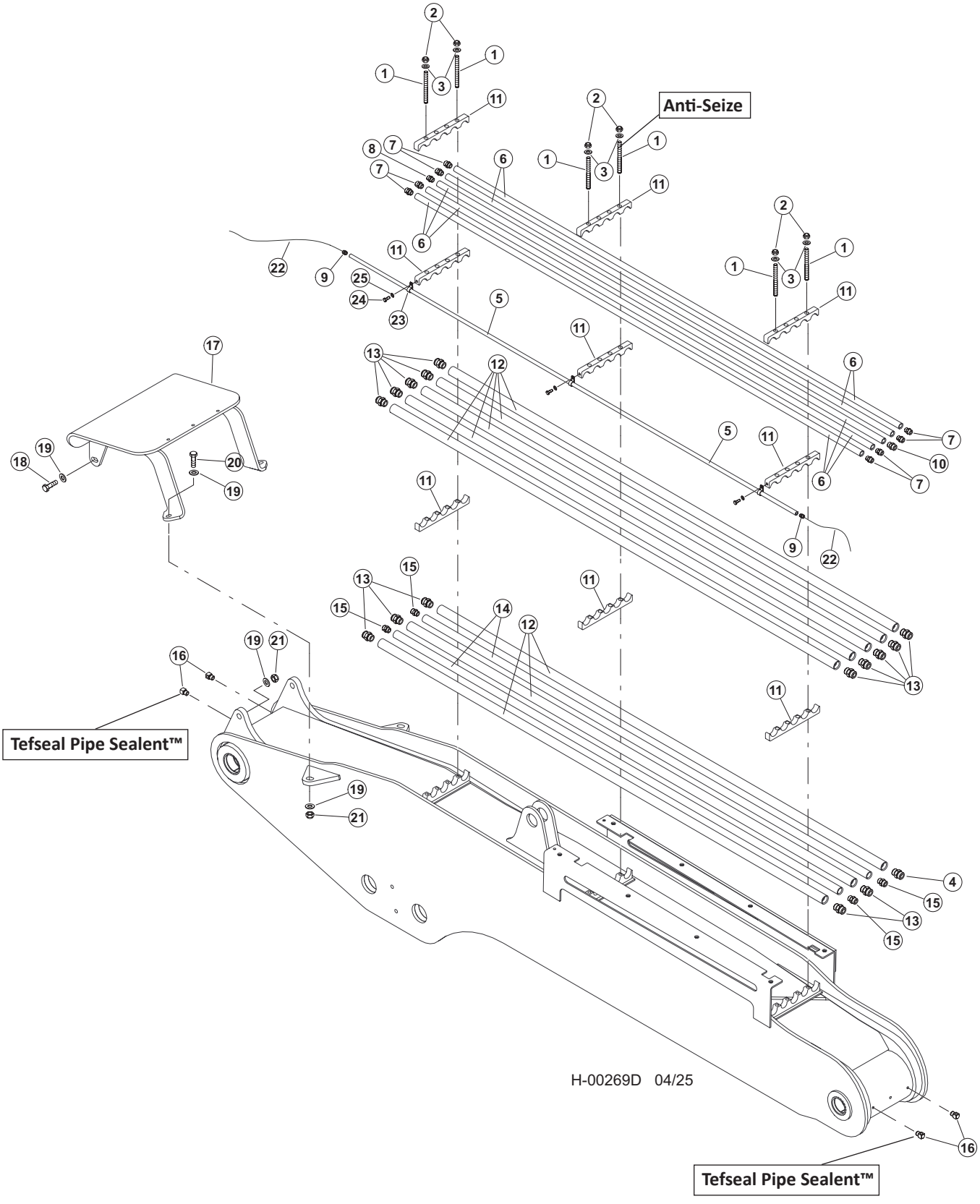

# H100-00670 - MAIN BOOM PIPING - DISC SAW/BAR SAW COMBO

| Item | Part # | Description | Qty. |
|---|---|---|---|
| 1 | 17062 | STUD - .625” X 8” **ANTI-SEIZE™** | 12 |
| 2 | 15563 | NUT, NYLOCK - .625” | 12 |
| 3 | 10771 | WASHER, SAE FLAT - .625 | 12 |
| 4 | 17063 (KIT - 57400) | CONNECTOR, STR - FF1852T-2016S | 1 |
| 5 | 53116 | TUBELINE - .3/8” X 108” - BLACK PIPE | 1 |
| 6 | 51815 | TUBELINE - .5” X 108” | 5 |
| 7 | 51880 (KIT - 57400) | CONNECTOR, STR - (10-8 F50L0-S) | 4 |
| 8 | 15117 (KIT - 57400) | CONNECTOR, STR - FF1852T-1208S | 1 |
| 9 | 51878 (KIT - 57400) | CONNECTOR, STR - MALE PIPE (6-6 FLO-S) | 2 |
| 10 | 16913 (KIT - 57400) | CONNECTOR, STR - FF1852T-0808S | 1 |
| 11 | 52155 | CLAMP, SADDLE - DRILLED (5-1” TUBES) | 9 |
| 12 | 51833 | TUBELINE - 1” X 108” FB MAIN | 8 |
| 13 | 15225 (KIT - 57400) | CONNECTOR, STR - FF1852T-1616S | 15 |
| 14 | 51834 | TUBELINE - .75” X 108” FB MAIN | 2 |
| 15 | 15152 (KIT - 57400) | CONNECTOR, STR - FF1852T-1212S | 4 |
| 16 | 22281 | ELBOW, 1/8-27 NPTF(M), 1/8-17 NPTF(F),90 **TEFSEAL PIPE SEALANT™** | 4 |
| 17 | 53927 | GUARD, HOSE - MAIN BOOM (FB)(53919 BOOM) | 1 |
| 18 | 10840 | BOLT - .75” X 3” | 2 |
| 19 | 10806 | WASHER, 3/4” USS TRU-TORQ | 8 |
| 20 | 58398 | BOLT - .75” X 2.75” | 2 |
| 21 | 10817 | NUT, 3/4-10 UNC | 4 |
| 22 | 58380 | CABLE | 30’ |
| 23 | 53265 | CLAMP | 3 |
| 24 | 23264 | BOLT - .25” X .5” | 3 |
| 25 | 10757 | WASHER, SAE FLAT - .25” | 3 |

# H100-00680 - STICK BOOM PIPING - DISC SAW/BAR SAW COMBO

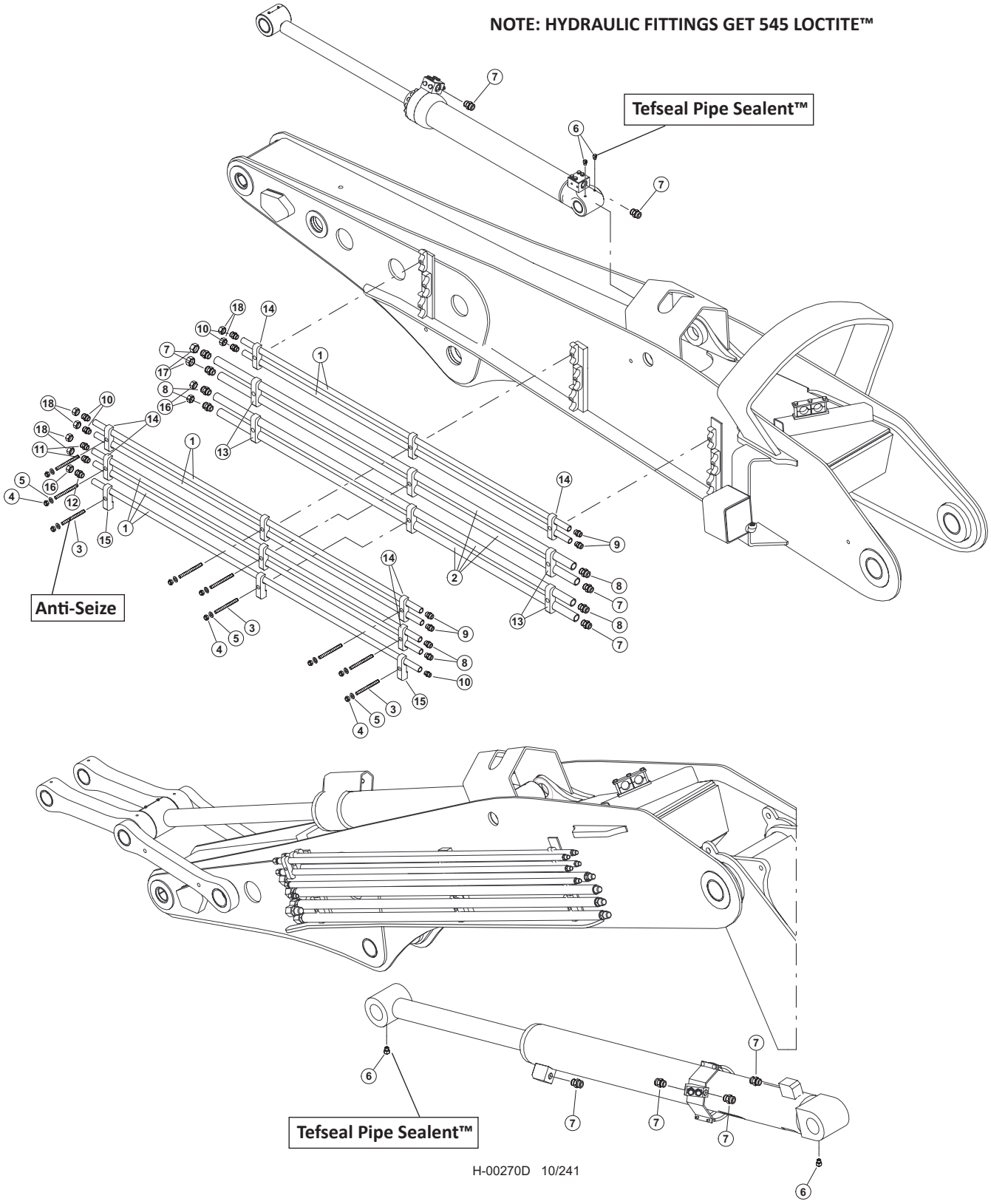

# H100-00680 - STICK BOOM PIPING - DISC SAW/BAR SAW COMBO

| Item | Part # | Description | Qty. |
|---|---|---|---|
| 1 | 16513 | TUBELINE - .5” X 80” | 7 |
| 2 | 16506 | TUBELINE - 1” X 84” | 4 |
| 3 | 15672 | STUD - .625” X 6.25” **ANTI-SEIZE™** | 9 |
| 4 | 15563 | NUT, NYLOCK - .625” | 9 |
| 5 | 10771 | WASHER, FLAT - .625” | 9 |
| 6 | 22281 | ELBOW, 90 - 5546132 **TEFSEAL PIPE SEALANT™** | 2 |
| 7 | 15525 (KIT - 57401) | CONNECTOR, STR - FF1852T-1616S | 16 |
| 8 | 15226 (KIT - 57401) | CONNECTOR, STR - FF1852T-1216S | 4 |
| 9 | 51880 (KIT - 57401) | CONNECTOR, STR - (10-8 F50L0-S) | 4 |
| 10 | 15117 (KIT - 57401) | CONNECTOR, STR - FF1852T-0808S | 1 |
| 11 | 57394 | FITTING, 8-16 F5OLO-S | 3 |
| 12 | 16913 (KIT - 57401) | CONNECTOR, STR - FF1852T-1208S | 1 |
| 13 | 12447 | CLAMP, SADDLE TUBE 1”X1” (TAPPED) | 6 |
| 14 | 15272 | CLAMP, SADDLE TOP TUBE - .5” & .5” | 9 |
| 15 | 23222 | CLAMP, SADDLE TOP TUBE - .5” (1 TUBE) | 3 |
| 16 | 15437 | CAP - FF9863-12S | 3 |
| 17 | 15436 | CAP - FF9863-16S | 2 |
| 18 | 15434 | CAP - FF9863-08S | 6 |

# H-2224500 - DISC SAW/BAR SAW COMBO PIPING - PRESSURE, RETURN, CASE DRAIN & LOAD SENSE (DISC SAW PUMP TO BOOM)

**NOTE: HYDRAULIC FITTINGS GET 545 LOCTITE™**

**NOTE: APPLY GREASE TO O-RINGS**

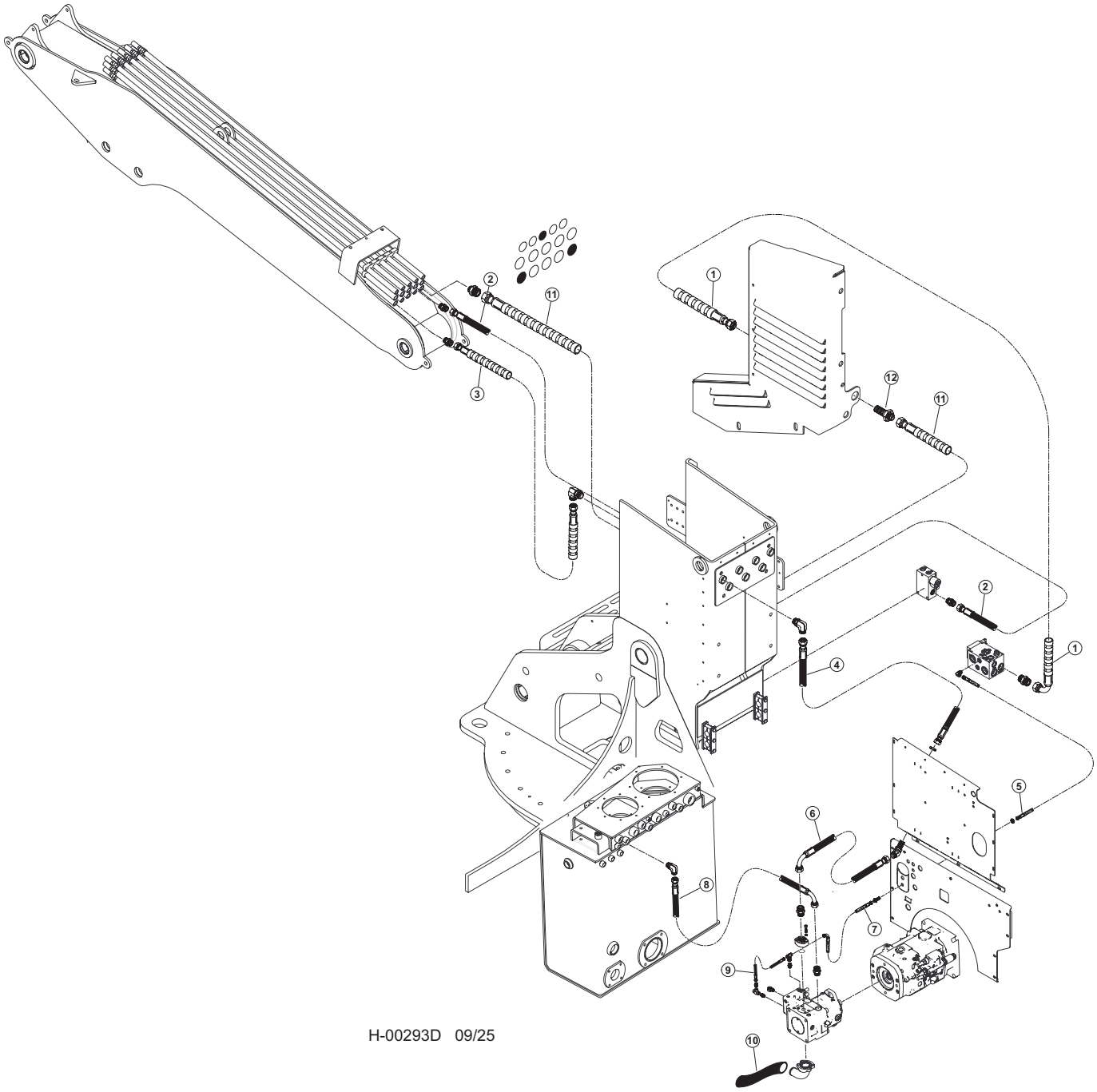


H-00293D 09/25

# H-2224500 - DISC SAW/BAR SAW COMBO PIPING - PRESSURE, RETURN, CASE DRAIN & LOAD SENSE (DISC SAW PUMP TO BOOM)

| Item | Part # | Description | Qty. |
|---|---|---|---|
| 1 | 689410 - (658781 - KIT) | HOSE, HYD, 187TC44 20-20JS-20J9-SW **- (DISC SAW RETURN)** | 1 |
| 2 | 65880 - (65878 - KIT) | HOSE, HYD, 187TC54 12-12OS-12OS-W **- (ATTACHMENT CASE DRAIN)** | 1 |
| 3 | 65885 - (65878 - KIT) | HOSE, HYD, 787TC40 16-16OS-16OS-SW **- (DISC SAW PRESSURE)** | 1 |
| 4 | 65874 - (65878 - KIT) | HOSE, HYD, 787TC24.5 16-16OS-16OS **- (DISC SAW PRESSURE)** | 1 |
| 5 | 65877 - (65878 - KIT) | HOSE, HYD, 787TC39 04-04OS-04OS-W **- (AUXILARY PUMP LS DRAIN)** | 1 |
| 6 | 65875 - (65872 - KIT) | HOSE, HYD, 787TC34 16-16OS-16O9 **- (DISC SAW PRESSURE)** | 1 |
| 7 | 65876 - (65872 - KIT) | HOSE, HYD, 787TC35 04-04OS-04O9-W **- (AUXILARY PUMP LS DRAIN)** | 1 |
| 8 | 65879 - (65878 - KIT) | HOSE, HYD, 187TC27.5 12-12OS-12O9 **- (AUXILARY PUMP CASE DRAIN)** | 1 |
| 9 | 65873 - (65872 - KIT) | HOSE, HYD, 787TC11 04-04OS-04O9 **- (AUXILARY PUMP LOAD SENSE)** | 1 |
| 10 | 65883 - (65878 - KIT) | HOSE, SUCTION, 7219-200018.532-00-00 **- (AUXILARY PUMP SUCTION INLET)** | 1 |
| 11 | 689400 - (658781 - KIT) | HOSE, HYD, 187TC44 20-20JS-20OS-SW **- (DISC SAW RETURN)** | 1 |
| 12 | 57491- (57950- KIT) | FITTING, 20 WTX-WLN-S | 1 |

# H100-00700 - DISC SAW/BAR SAW COMBO PIPING - TOOL TILT (K220/L90 VALVE)
# MAIN VALVE TO BOOM

**NOTE: HYDRAULIC FITTINGS GET 545 LOCTITE™**

**NOTE: APPLY GREASE TO O-RINGS**

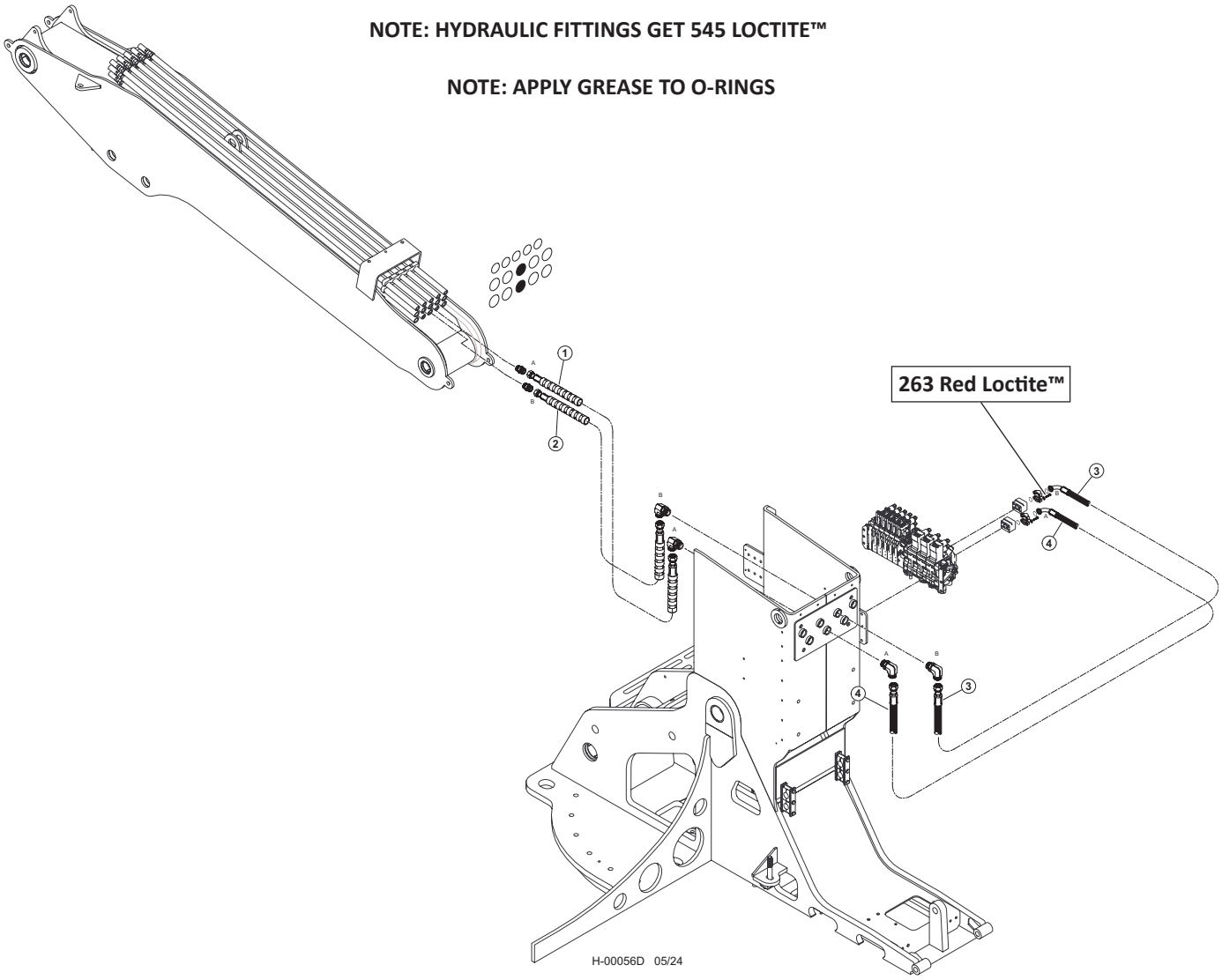


| Item | Part # | Description | Qty. |
|---|---|---|---|
| 1 | 57944 - (KIT) | HOSE ASSY - 722TC40 16-16OS-16OS-SW - (TOOL CYLINDER “A”) | 1 |
| 2 | 57944 - (KIT) | HOSE ASSY - 722TC40 16-16OS-16OS-SW - (TOOL CYLINDER “B”) | 1 |
| 3 | 57944 - (KIT) | HOSE ASSY - 722TC38 16-16OS-16PA9 - (TOOL CYLINDER “B”) | 1 |
| 4 | 57944 - (KIT) | HOSE ASSY - 722TC37 16-16OS-16PA9 - (TOOL CYLINDER “A”) | 1 |

# H200-00310 - DISC SAW/BAR SAW COMBO PIPING - TOOL TILT (W450/W300 VALVE)
# MAIN VALVE TO BOOM

**NOTE: HYDRAULIC FITTINGS GET 545 LOCTITE™**

**NOTE: APPLY GREASE TO O-RINGS**

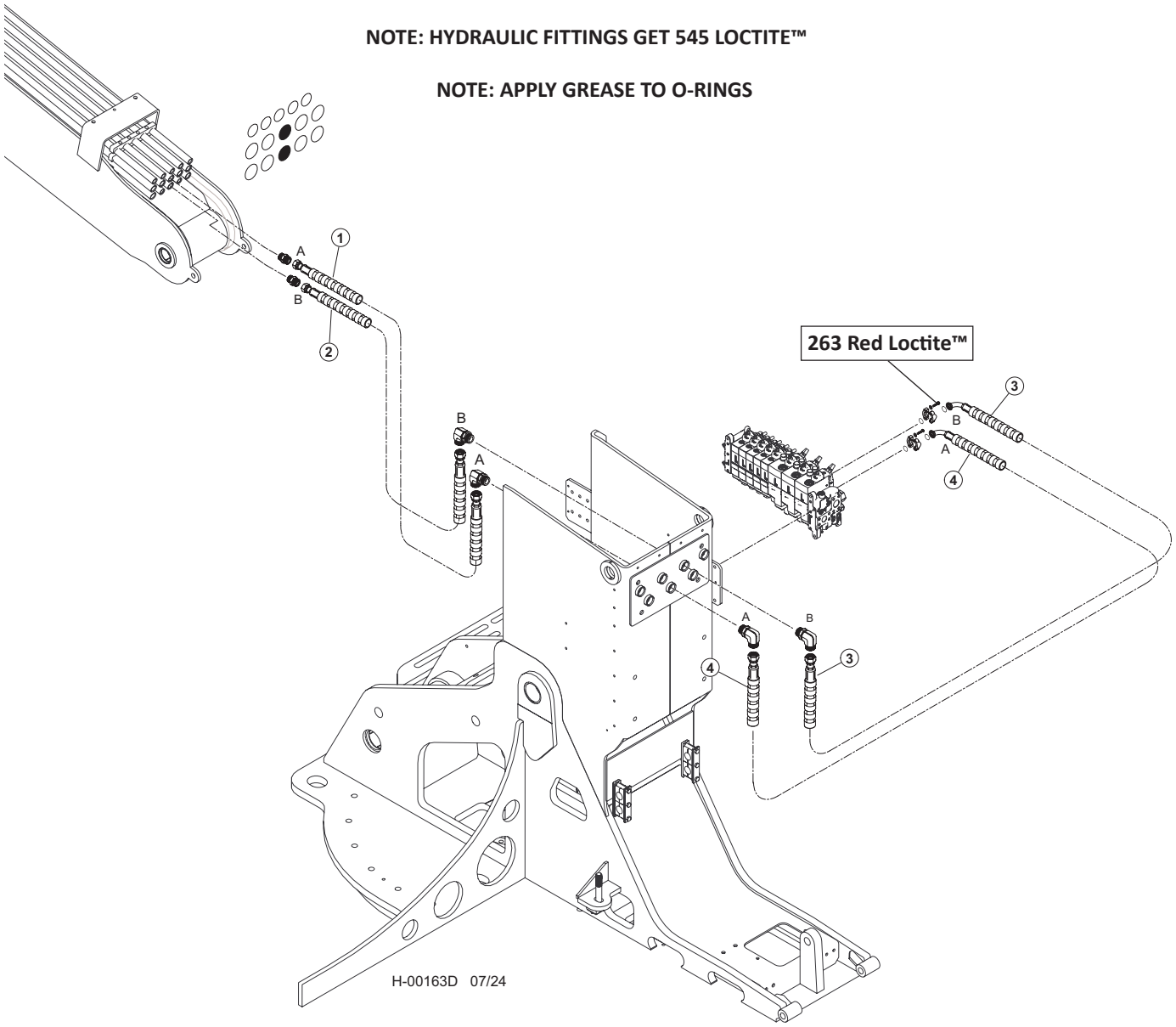


| Item | Part # | Description | Qty. |
|---|---|---|---|
| 1 | 65885 - (65878 - KIT) | HOSE, HYD, 787TC40 16-16OS-16OS-SW **("A" PORT - CHIMNEY TO BOOM)** | 1 |
| 2 | 65884 - (65878 - KIT) | HOSE, HYD, 787TC39 16-16OS-16OS-SW **("B" PORT - CHIMNEY TO BOOM)** | 1 |
| 3 | 65858 - (65856 - KIT) | HOSE, HYD, 787TC36.5 16-16OS-20PH9-SW **("B" PORT - VALVE TO CHIMNEY)** | 1 |
| 4 | 65482 - (65856 - KIT) | HOSE, HYD, 787TC36 16-16OS-20PH9-SW **("A" PORT - VALVE TO CHIMNEY)** | 1 |

# H100-00710 - DISC SAW/BAR SAW COMBO PIPING - STICK BOOM (K220/L90 VALVE) VALVE TO BOOM

**NOTE: HYDRAULIC FITTINGS GET 545 LOCTITE™**

**NOTE: APPLY GREASE TO O-RINGS**

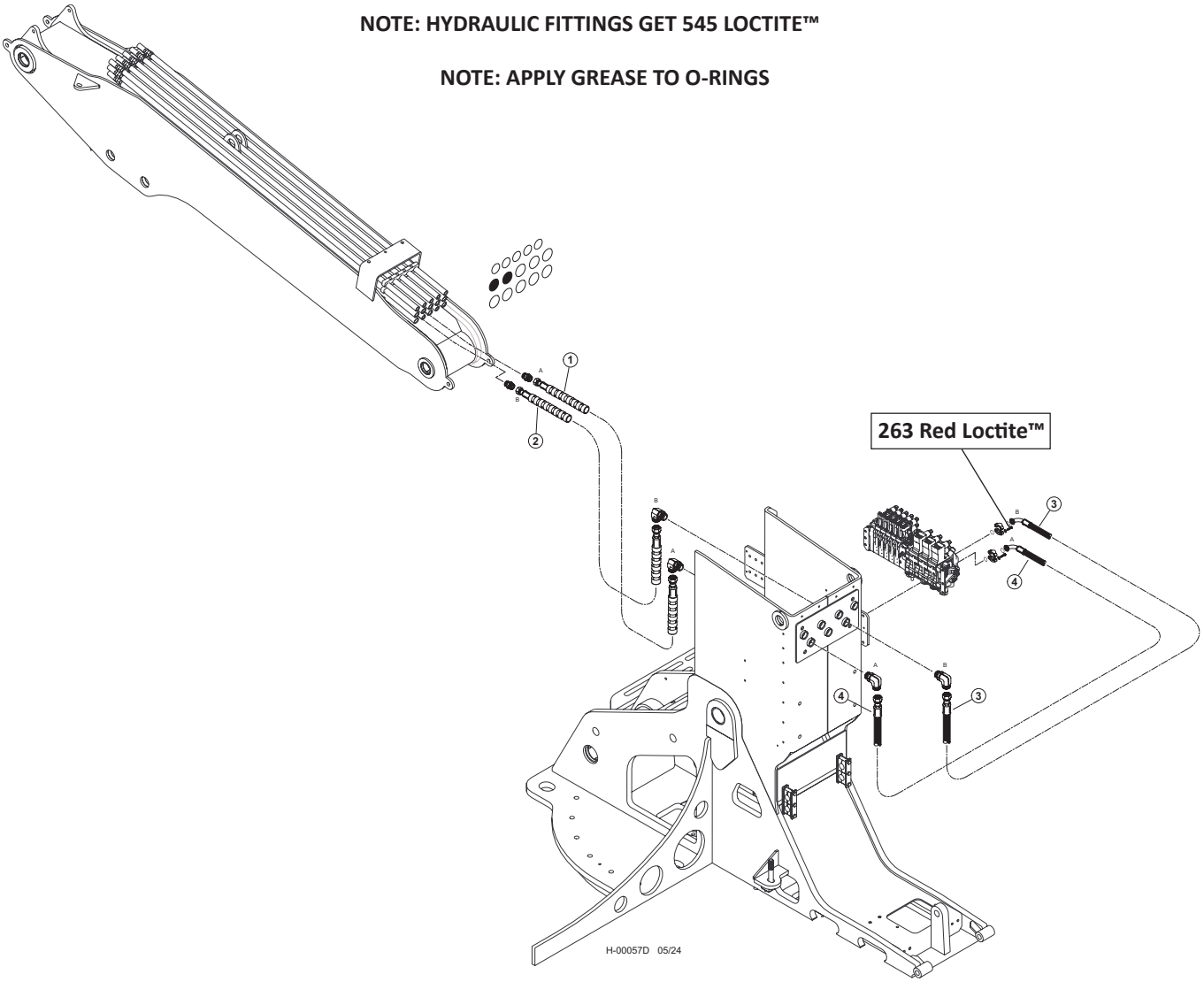


| Item | Part # | Description | Qty. |
|---|---|---|---|
| 1 | 57944 - (KIT) | HOSE ASSY - 722TC39 16-16OS-16OS-SW - (STICK CYLINDER “A”) | 1 |
| 2 | 57944 - (KIT) | HOSE ASSY - 722TC39 16-16OS-16OS-SW - (STICK CYLINDER “B”) | 1 |
| 3 | 57944 - (KIT) | HOSE ASSY - 722TC40 16-16OS-16PA9 - (STICK CYLINDER “B”) | 1 |
| 4 | 57944 - (KIT) | HOSE ASSY - 722TC39 16-16OS-16PA9 - (STICK CYLINDER “A”) | 1 |

# H200-00310 - DISC SAW/BAR SAW COMBO PIPING - STICK BOOM (W450/W300 VALVE) VALVE TO BOOM

**NOTE: HYDRAULIC FITTINGS GET 545 LOCTITE™**

**NOTE: APPLY GREASE TO O-RINGS**

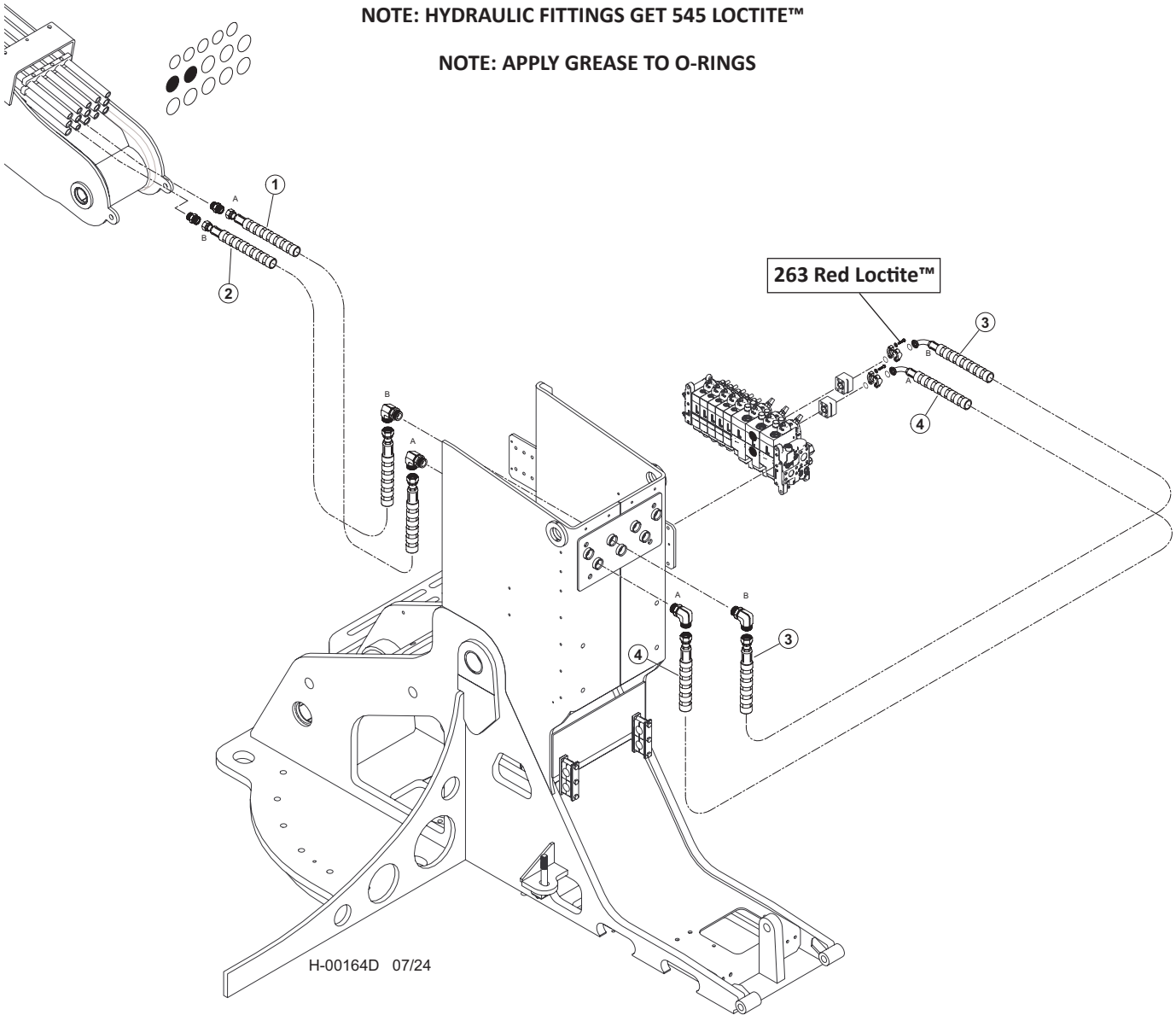


| Item | Part # | Description | Qty. |
|---|---|---|---|
| 1 | 65885 - (65878 - KIT) | HOSE, HYD, 787TC40 16-16OS-16OS-SW **("A" PORT - CHIMNEY TO BOOM)** | 1 |
| 2 | 65884 - (65878 - KIT) | HOSE, HYD, 787TC39 16-16OS-16OS-SW **("B" PORT - CHIMNEY TO BOOM)** | 1 |
| 3 | 65859 - (65856 - KIT) | HOSE, HYD, 787TC36.5 16-16OS-20PH9-SW **("B" PORT - VALVE TO CHIMNEY)** | 1 |
| 4 | 65615 - (65856 - KIT) | HOSE, HYD, 787TC36 16-16OS-20PH9-SW **("A" PORT - VALVE TO CHIMNEY)** | 1 |

# H100-00720 - DISC SAW/BAR SAW COMBO PIPING - CLAMP (K220/L90 VALVE)
# MAIN VALVE TO BOOM

**NOTE: HYDRAULIC FITTINGS GET 545 LOCTITE™**

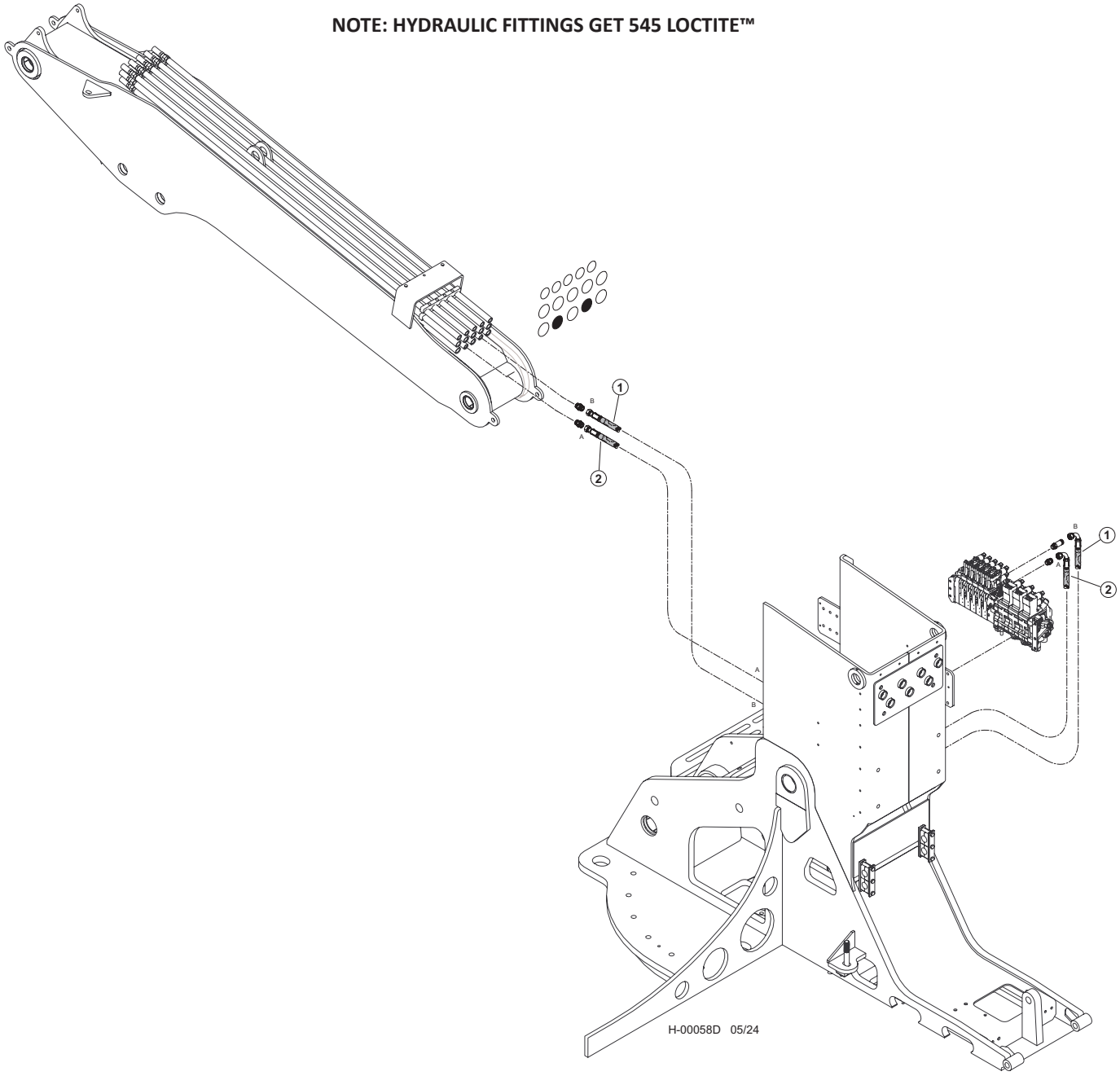


| Item | Part # | Description | Qty. |
|---|---|---|---|
| 1 | 57944 - (KIT) | HOSE ASSY - 722TC62 12-12OS-12O9-W - (CLAMP “B”) | 1 |
| 2 | 57944 - (KIT) | HOSE ASSY - 722TC64 12-12OS-12O9-W - (CLAMP “A”) | 1 |

# H200-00320 - DISC SAW/BAR SAW COMBO PIPING - CLAMP (W450/W300 VALVE)
# MAIN VALVE TO BOOM

**NOTE: HYDRAULIC FITTINGS GET 545 LOCTITE™**

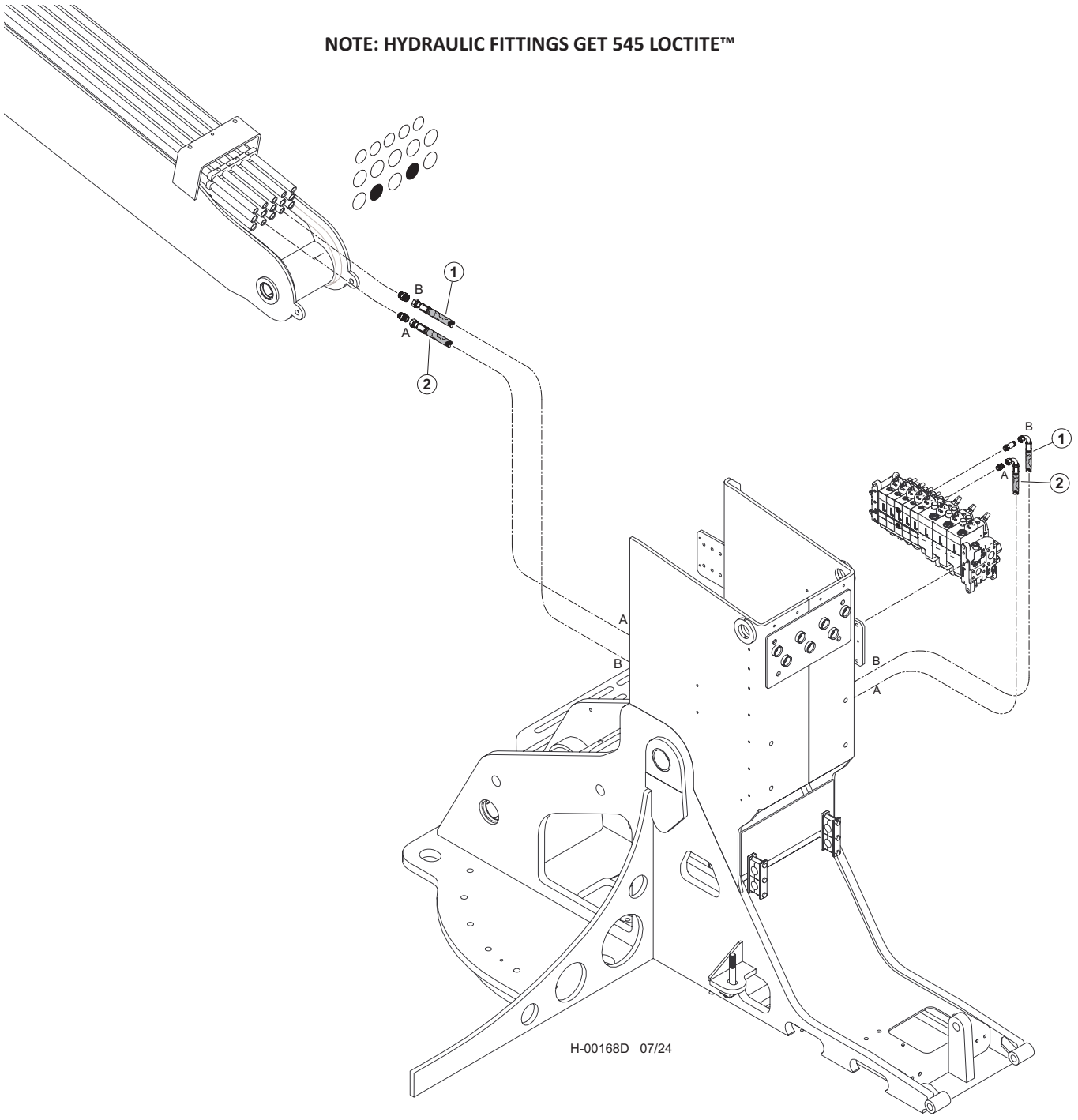


| Item | Part # | Description | Qty. |
|---|---|---|---|
| 1 | 65862 - (65856 - KIT) | HOSE, HYD, 722TC70.5 12-12OS-12O4-W - **(CLAMP "B")** | 1 |
| 2 | 65862 - (65856 - KIT) | HOSE, HYD, 722TC70.5 12-12OS-12O4-W - **(CLAMP "A")** | 1 |

# H100-00730 - DISC SAW/BAR SAW COMBO PIPING - ACCUMULATOR (K220/L90 VALVE) VALVE TO BOOM

**NOTE: HYDRAULIC FITTINGS GET 545 LOCTITE™**

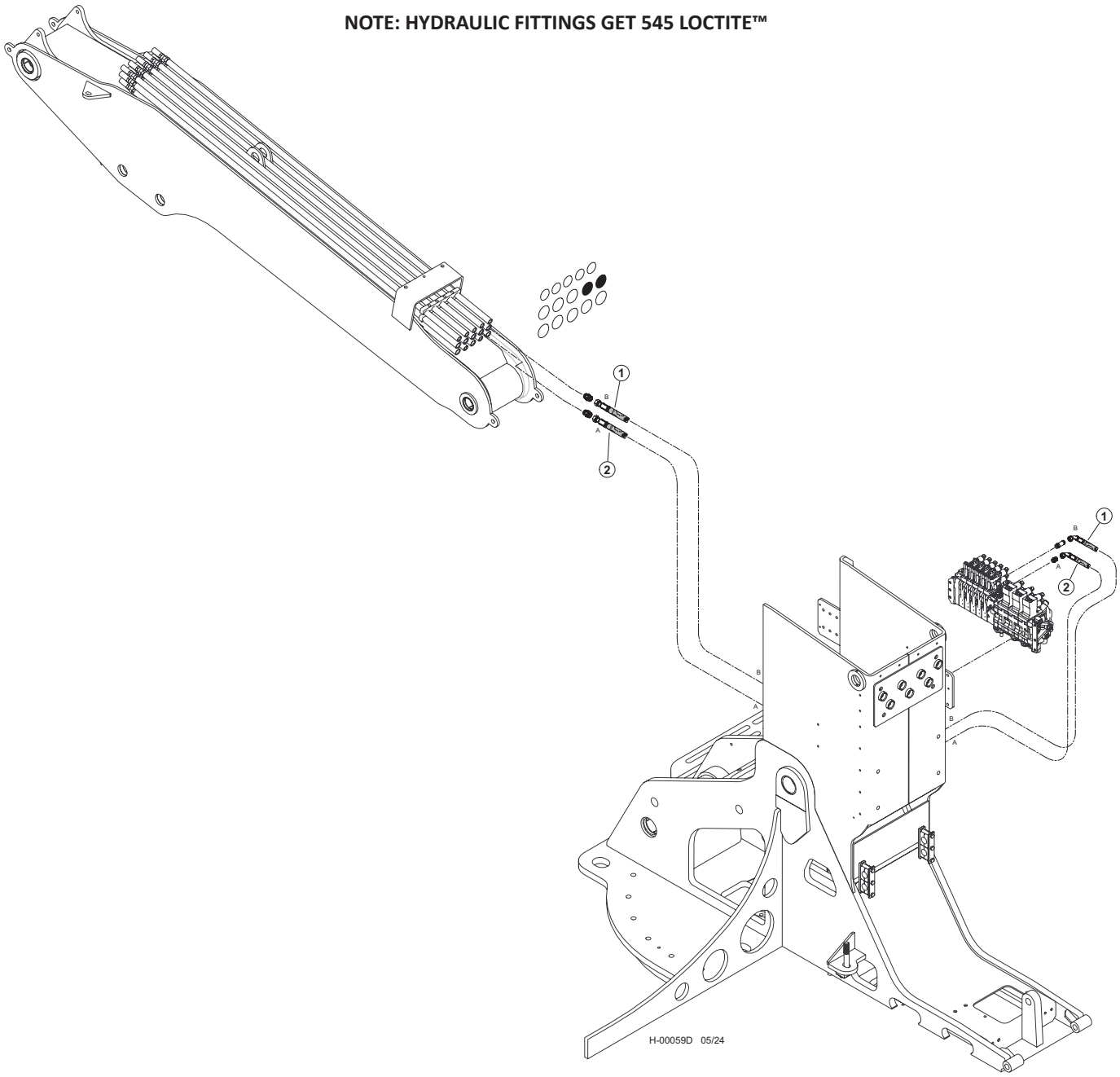


| Item | Part # | Description | Qty. |
|---|---|---|---|
| 1 | 57944 - (KIT) | HOSE ASSY - 722TC64 10-10OS-10O4-W - (CLAMP “B”) | 1 |
| 2 | 57944 - (KIT) | HOSE ASSY - 722TC63 10-10OS-10O4-W - (CLAMP “A”) | 1 |

# H200-00330 - DISC SAW/BAR SAW COMBO PIPING - ACCUMULATOR (W450/W300 VALVE) VALVE TO BOOM

**NOTE: HYDRAULIC FITTINGS GET 545 LOCTITE™**

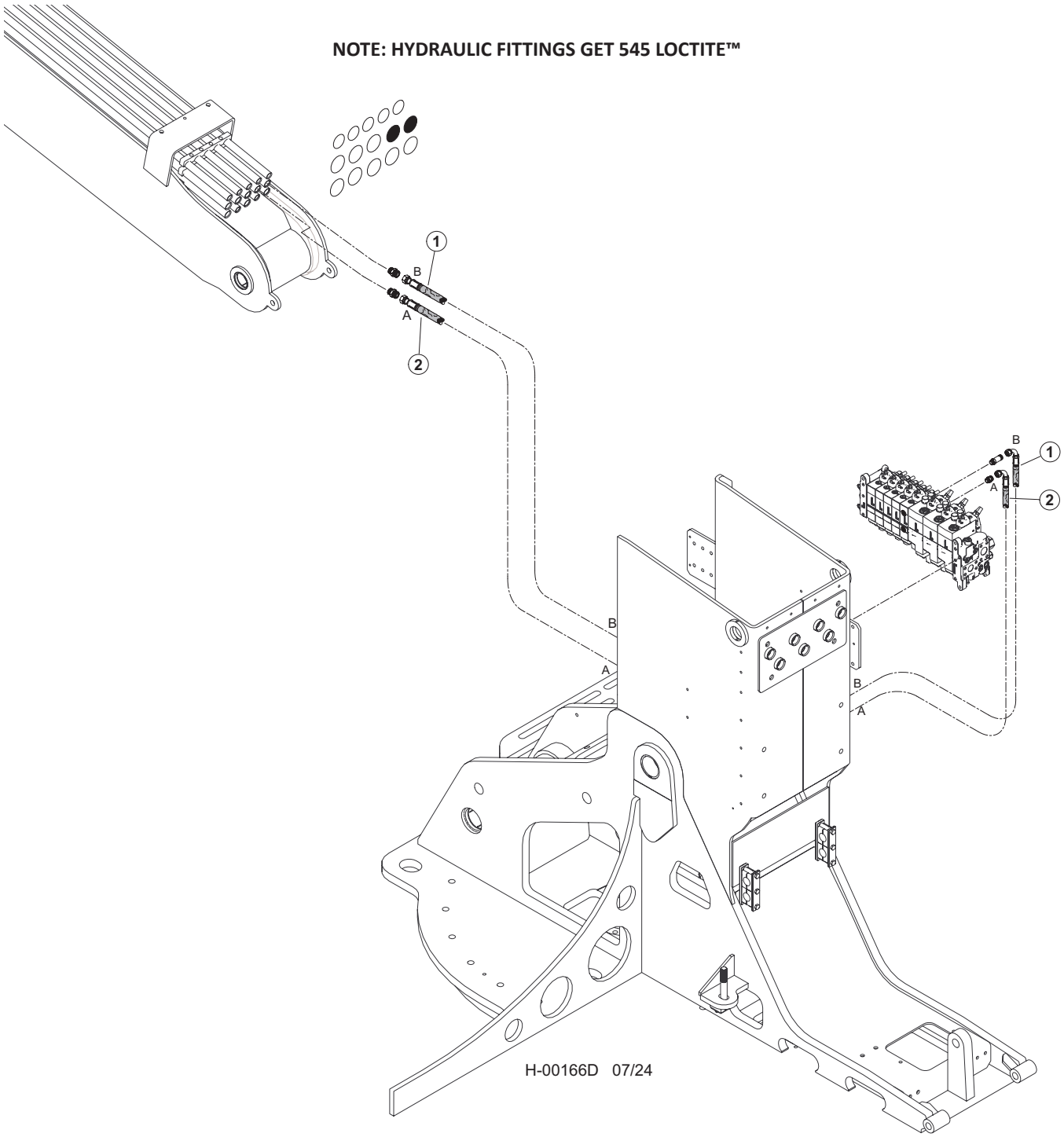


| Item | Part # | Description | Qty. |
|---|---|---|---|
| 1 | 65862 - (65856 - KIT) | HOSE, HYD, 722TC70.5 12-12OS-12O4-W - **(ACCUMULATOR "B")** | 1 |
| 2 | 65862 - (65856 - KIT) | HOSE, HYD, 722TC70.5 12-12OS-12O4-W - **(ACCUMULATOR "A")** | 1 |

# H100-00740 - DISC SAW/BAR SAW COMBO PIPING - LATERAL TILT (K220/L90 VALVE) VALVE TO BOOM

**NOTE: HYDRAULIC FITTINGS GET 545 LOCTITE™**

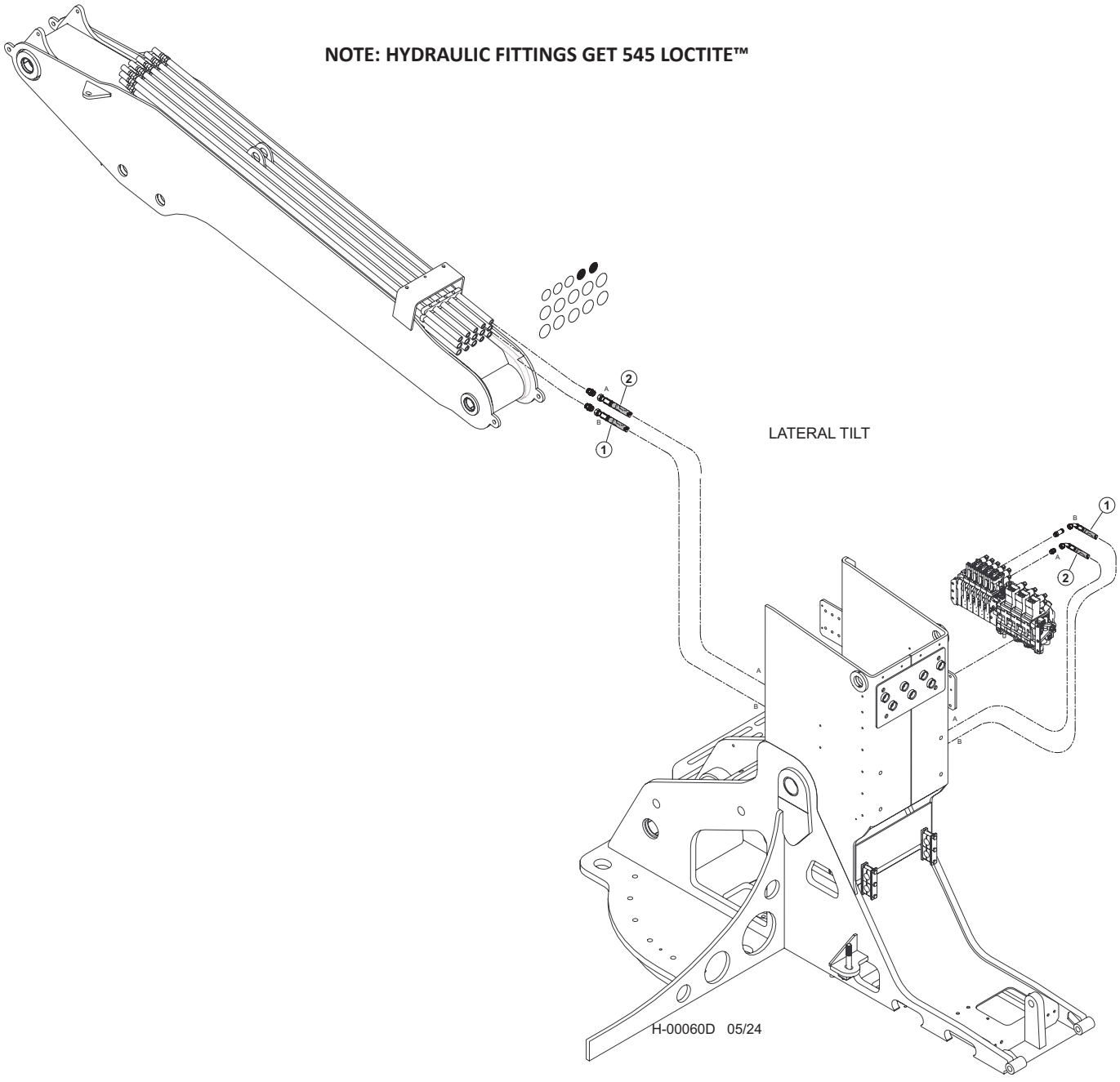


| Item | Part # | Description | Qty. |
|---|---|---|---|
| 1 | 57944 - (KIT) | HOSE ASSY - 722TC64 10-10OS-10O4-W - (LATERAL TILT “B”) | 1 |
| 2 | 57944 - (KIT) | HOSE ASSY - 722TC63 10-10OS-10O4-W - (LATERAL TILT “A”) | 1 |

# H200-00340 - DISC SAW/BAR SAW COMBO PIPING - LATERAL TILT (W450/W300 VALVE) VALVE TO BOOM

**NOTE: HYDRAULIC FITTINGS GET 545 LOCTITE™**

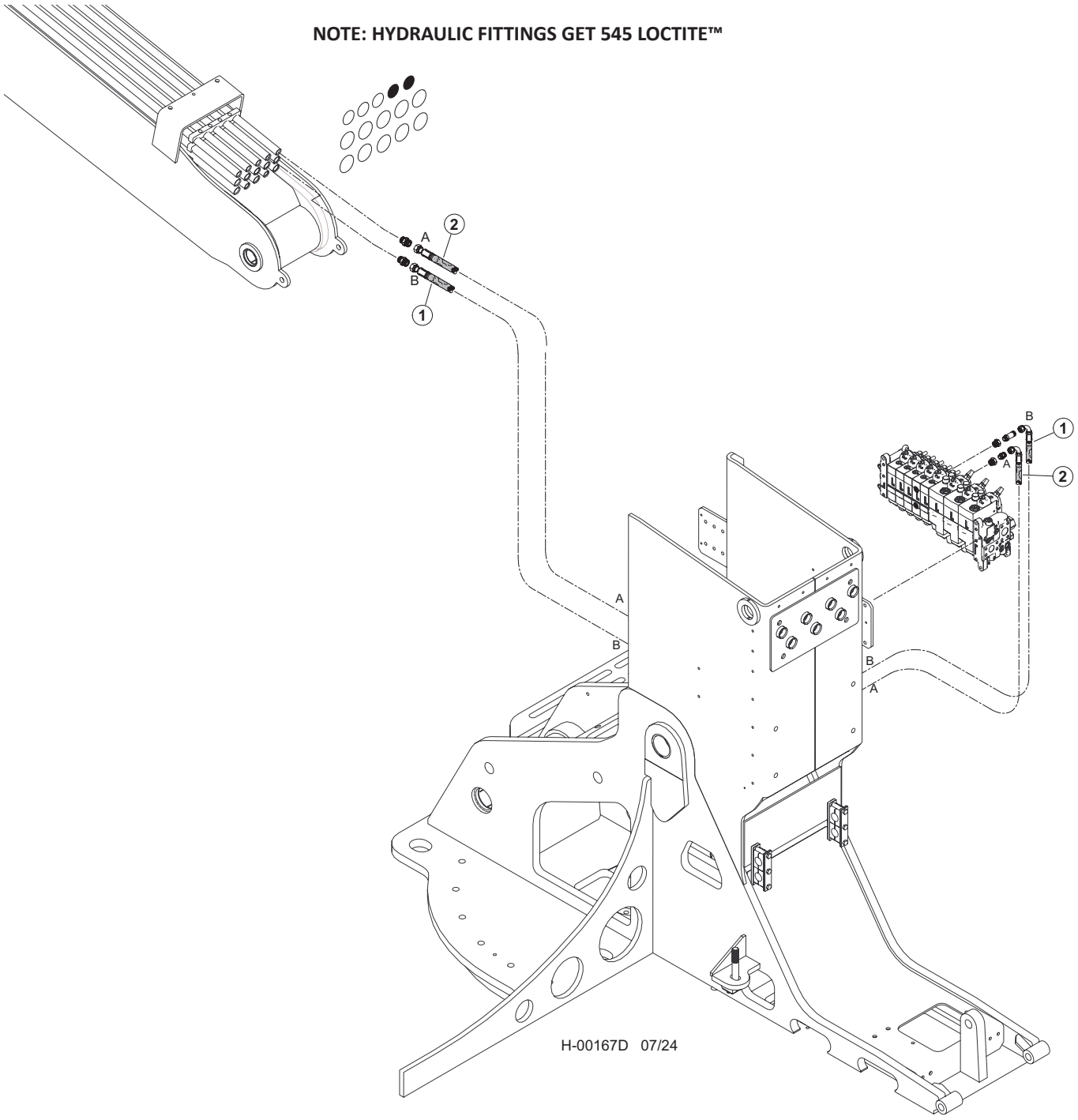


| Item | Part # | Description | Qty. |
|---|---|---|---|
| 1 | 65863 - (65856 - KIT) | HOSE, HYD, 722TC65.5 10-10OS-10O4-W - **(LATERAL TILT "B")** | 1 |
| 2 | 65863 - (65856 - KIT) | HOSE, HYD, 722TC65.5 10-10OS-10O4-W - **(LATERAL TILT "A")** | 1 |

# H100-00750 - DISC SAW/BAR SAW COMBO PIPING - CAB LEVEL (K220/L90 VALVE)
# VALVE TO BOOM

**NOTE: HYDRAULIC FITTINGS GET 545 LOCTITE™**

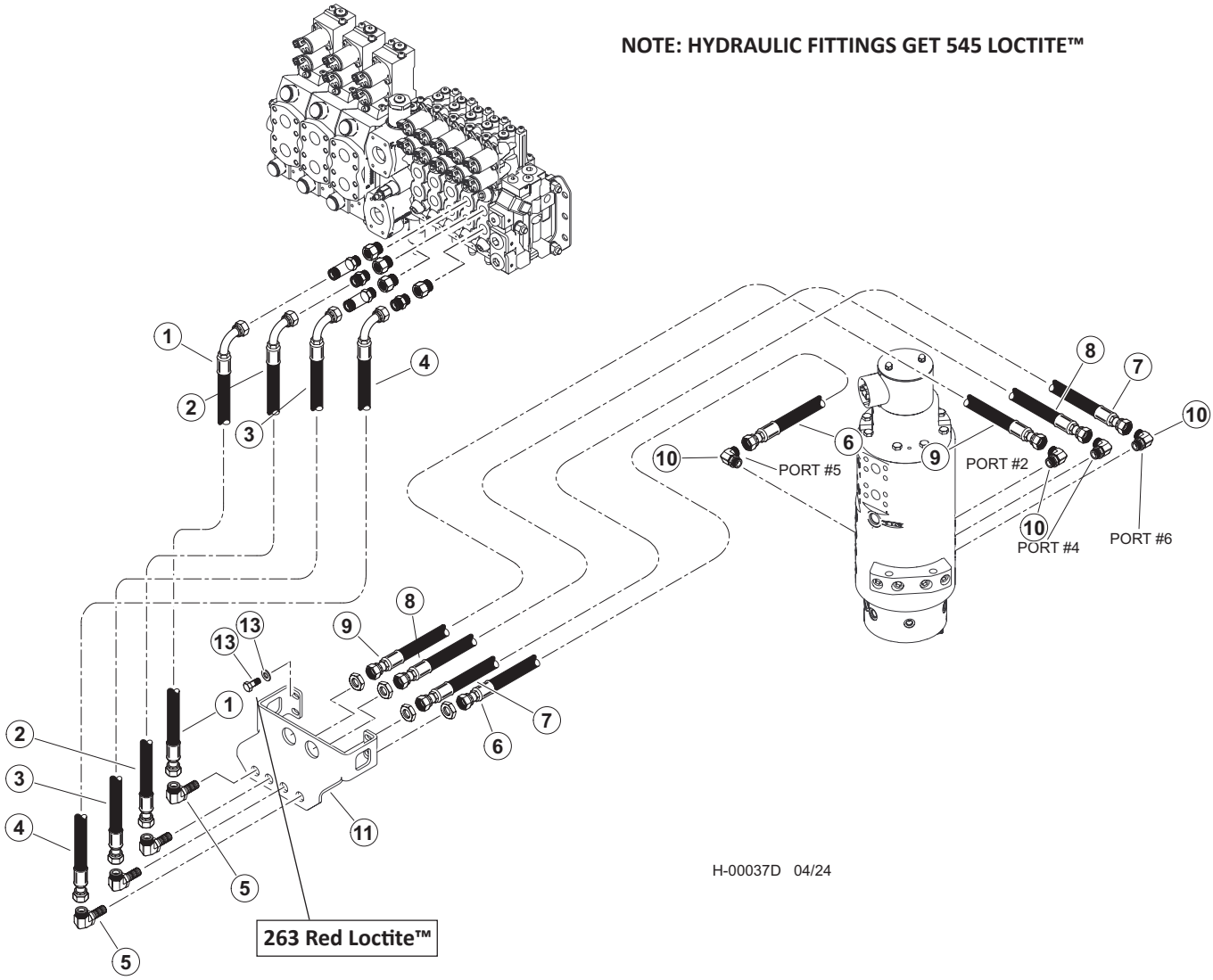


| Item | Part # | Description | Qty. |
|---|---|---|---|
| 1 | 57945 - (KIT) | HOSE ASSY - 787TC42 08-08OS-0809 - (VALVE PORT “B” TO BULKHEAD) | 1 |
| 2 | 57945 - (KIT) | HOSE ASSY - 787TC42 08-08OS-0809 - (VALVE PORT “B” TO BULKHEAD) | 1 |
| 3 | 57945 - (KIT) | HOSE ASSY - 787TC39 08-08OS-0809 - (VALVE PORT “A” TO BULKHEAD) | 1 |
| 4 | 57945 - (KIT) | HOSE ASSY - 787TC39 08-08OS-0809 - (VALVE PORT “A” TO BULKHEAD) | 1 |
| | 57947 | KIT, FITTING TRACK LEVEL-D SERIES | 1 |
| 5 | 24187 | ELBOW, 90 BULKHEAD - 855BH-TT-08 | 4 |
| 6 | 57945 - (KIT) | HOSE ASSY - 787TC30 08-08OS-080S - (BULKHEAD TO PORT #5 ON ROT MAN) | 1 |
| 7 | 57945 - (KIT) | HOSE ASSY - 787TC40 08-08OS-080S - (BULKHEAD TO PORT #6 ON ROT MAN) | 1 |
| 8 | 57945 - (KIT) | HOSE ASSY - 787TC41.5 08-08OS-080S - (BULKHEAD TO PORT #4 ON ROT MAN) | 1 |
| 9 | 57945 - (KIT) | HOSE ASSY - 787TC44 08-08OS-080S - (BULKHEAD TO PORT #2 ON ROT MAN) | 1 |
| 10 | 16360 | ELBOW, 90 - FF1868T-0808S | 4 |
| 11 | 60559 | BULHEAD, FRONT - TM | 1 |
| 12 | 15542 | BOLT - .375” X .75” | 2 |
| 13 | 15528 | WASHER, SAE FLAT - .375” OR 3/8” **263 RED LOCTITE™** | 2 |

# H200-00350 - DISC SAW/BAR SAW COMBO PIPING - CAB LEVEL (W450/W300 VALVE) VALVE TO BOOM

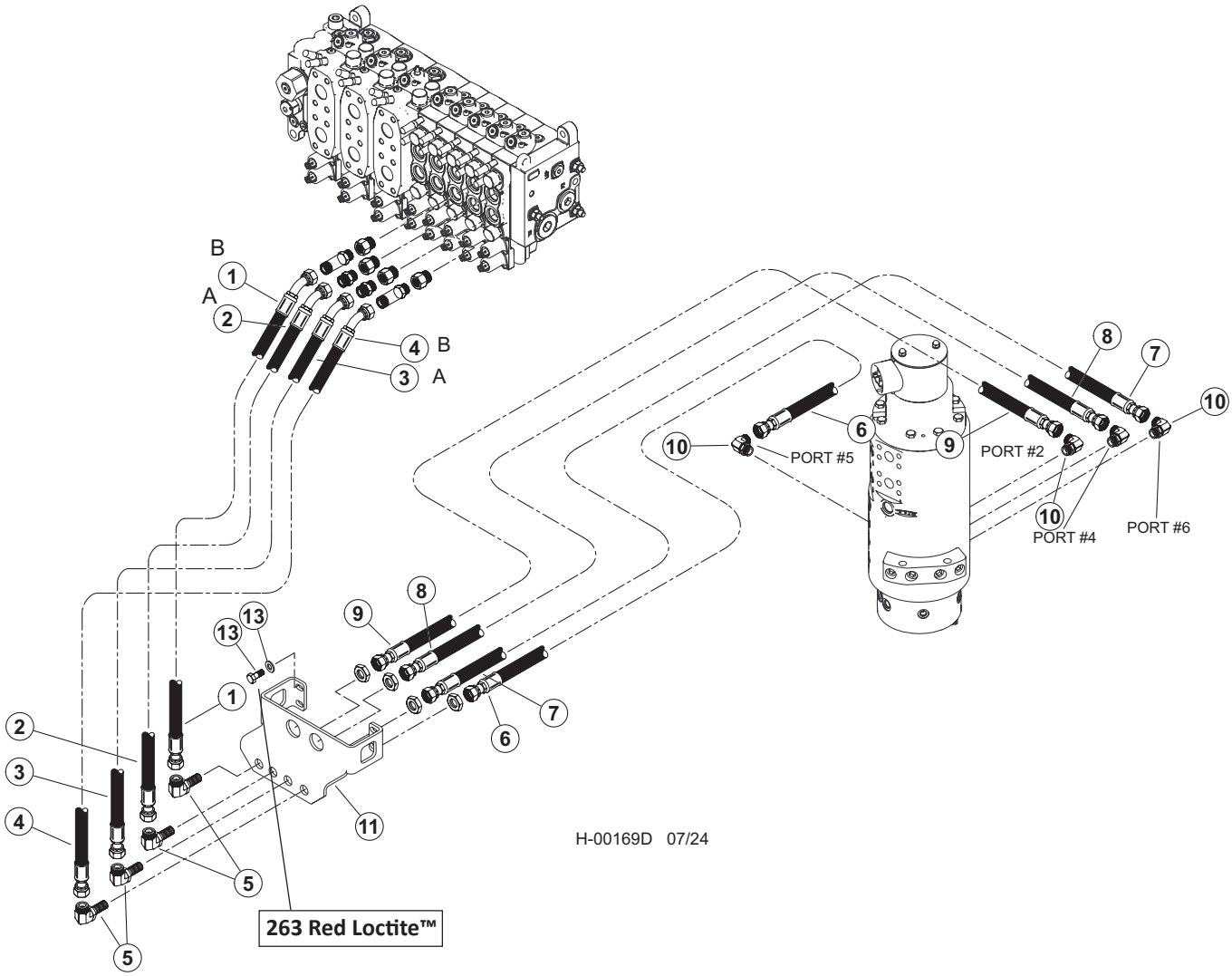


| Item | Part # | Description | Qty. |
|---|---|---|---|
| 1 | 65621 - (65619 - KIT) | HOSE, HYD, 787TC45 08-08OS-08O9 - **(VALVE PORT "B" TO BULKHEAD)** | 1 |
| 2 | 65621 - (65619 - KIT) | HOSE, HYD, 787TC45 08-08OS-08O9 - **(VALVE PORT "B" TO BULKHEAD)** | 1 |
| 3 | 65620 - (65619 - KIT) | HOSE, HYD, 787TC40.5 08-08OS-08O9 - **(VALVE PORT "A" TO BULKHEAD)** | 1 |
| 4 | 65620 - (65619 - KIT) | HOSE, HYD, 787TC40.5 08-08OS-08O9 - **(VALVE PORT "A" TO BULKHEAD)** | 1 |
| | 57947 | KIT, FITTING TRACK LEVEL-D SERIES | 1 |
| 5 | 24187 | ELBOW, 90 BULKHEAD - 855BH-TT-08 | 4 |
| 6 | 65892 - (65891 - KIT) | HOSE ASSY - 787TC30 08-08OS-080S - **(BULKHEAD TO PORT #5 ON ROT MAN)** | 1 |
| 7 | 65893 - (65891 - KIT) | HOSE ASSY - 787TC40 08-08OS-080S - **(BULKHEAD TO PORT #6 ON ROT MAN)** | 1 |
| 8 | 65894 - (65891 - KIT) | HOSE ASSY - 787TC41.5 08-08OS-080S - **(BULKHEAD TO PORT #4 ON ROT MAN)** | 1 |
| 9 | 65895 - (65891 - KIT) | HOSE ASSY - 787TC44 08-08OS-080S - **(BULKHEAD TO PORT #2 ON ROT MAN)** | 1 |
| 10 | 16360 | ELBOW, 90 - FF1868T-0808S | 4 |
| 11 | 60559 | BULHEAD, FRONT - TM | 1 |
| 12 | 15542 | BOLT - .375" X .75" | 2 |
| 13 | 15528 | WASHER, SAE FLAT - .375" OR 3/8" **263 RED LOCTITE™** | 2 |

# H100-00760 - DISC SAW/BAR SAW COMBO PIPING - MAIN BOOM CYLINDER (BULKHEAD FITTING TO CYLINDER)

**NOTE: HYDRAULIC FITTINGS GET 545 LOCTITE™**

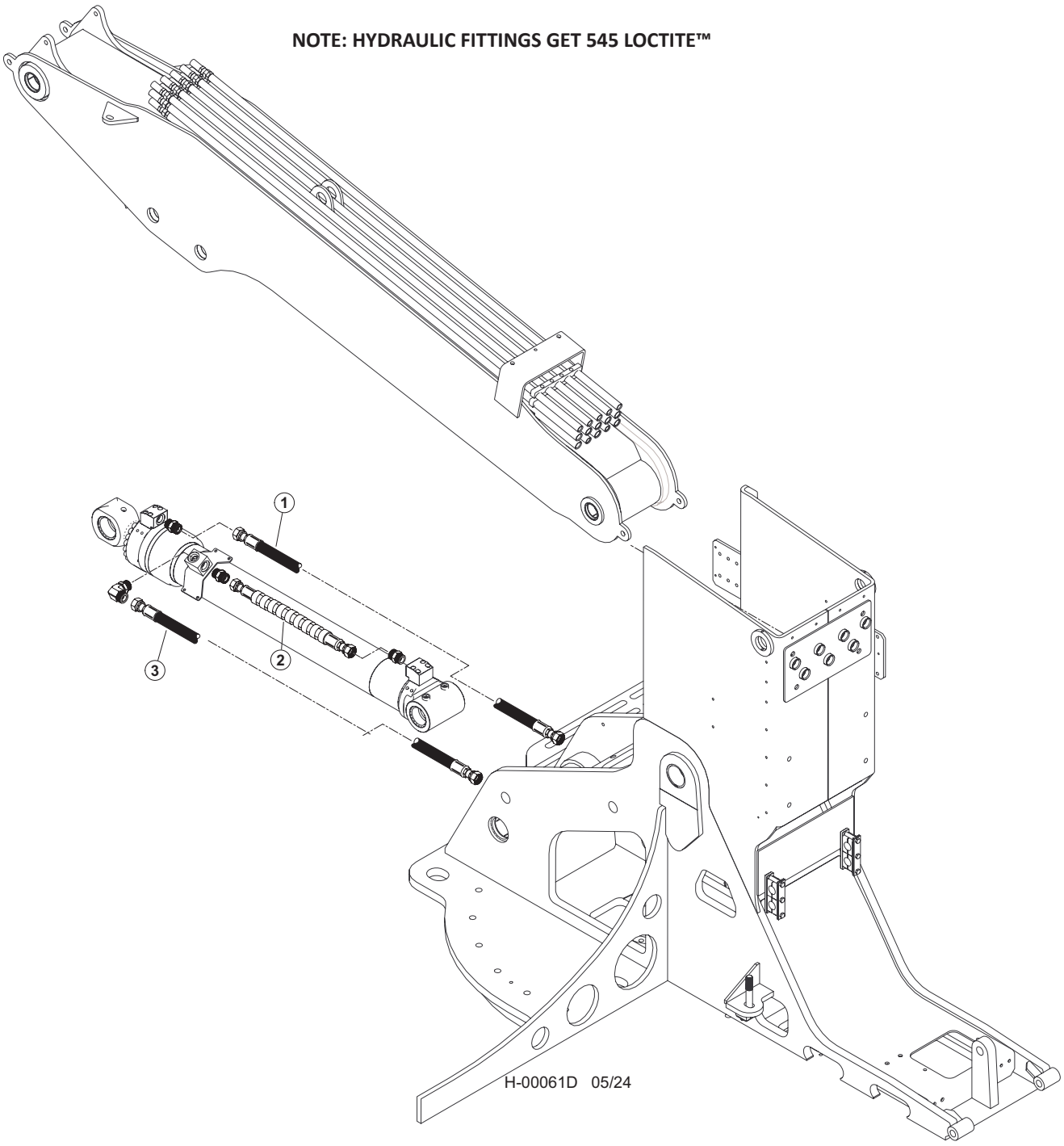


| Item | Part # | Description | Qty. |
|---|---|---|---|
| 1 | 57944 - (KIT) | HOSE ASSY - 722TC70 16-16OS-16OS - (ROD END OF BOOM CYLINDER) | 1 |
| 2 | 57944 - (KIT) | HOSE ASSY - 722TC45.5 16-16OS-16OS-SW - (BASE END OF BOOM CYLINDER TO BLOCK) | 1 |
| 3 | 57944 - (KIT) | HOSE ASSY - 722TC60 16-16OS-16OS - (BASE END OF BOOM CYLINDER) | 1 |

# H100-00770 - DISC SAW/BAR SAW COMBO PIPING - SAW (K220/L90 VALVE)
# BULKHEAD FITTING TO CYLINDER

**NOTE: HYDRAULIC FITTINGS GET 545 LOCTITE™**

**NOTE: APPLY GREASE TO O-RINGS**

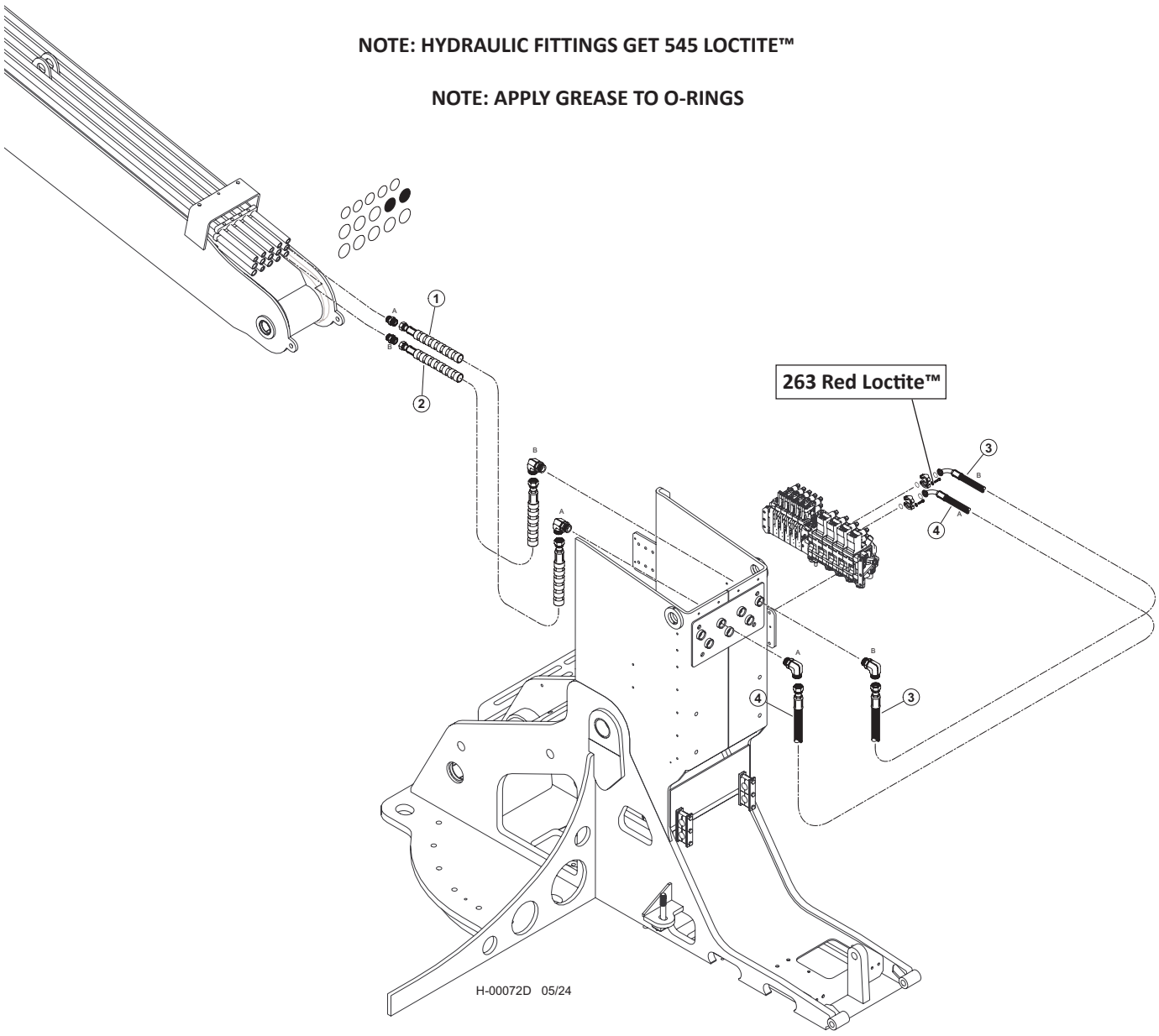


| Item | Part # | Description | Qty. |
|---|---|---|---|
| 1 | 57944 - (KIT) | HOSE ASSY - 722TC40 16-16OS-16OS-SW - (SAW “A”) | 1 |
| 2 | 57944 - (KIT) | HOSE ASSY - 722TC39 16-16OS-16OS-SW - (SAW “B”) | 1 |
| 3 | 57944 - (KIT) | HOSE ASSY - 722TC33 16-16OS-16O9 - (SAW “B”) | 1 |
| 4 | 57944 - (KIT) | HOSE ASSY - 722TC36 16-16OS-1609 - (SAW “A”) | 1 |

# H200-00350 - DISC SAW/BAR SAW COMBO PIPING - SAW (W450/W300 VALVE) BULKHEAD FITTING TO CYLINDER

**NOTE: HYDRAULIC FITTINGS GET 545 LOCTITE™**

**NOTE: APPLY GREASE TO O-RINGS**

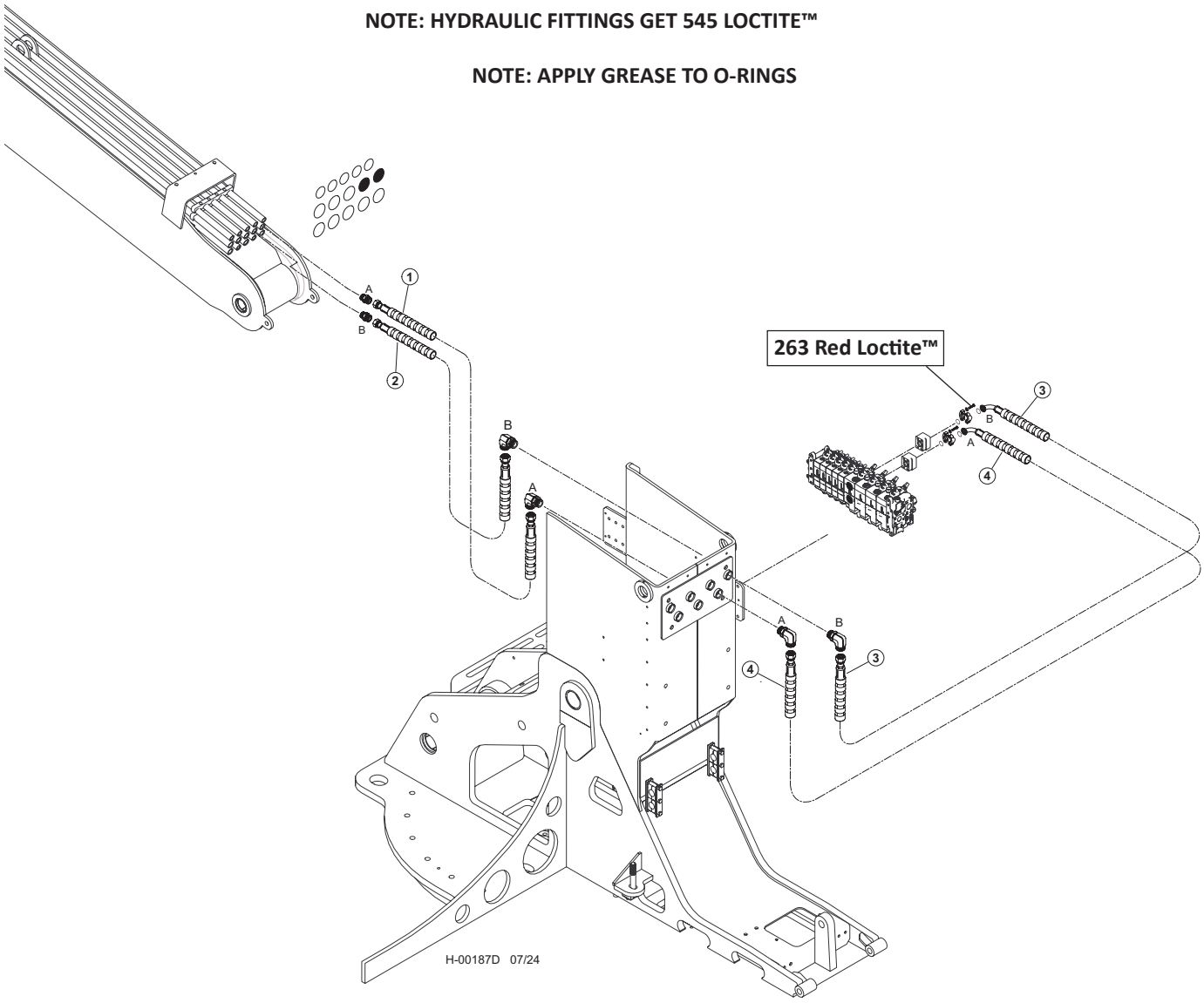


| Item | Part # | Description | Qty. |
|---|---|---|---|
| 1 | 65884 | HOSE, HYD, 787TC39 16-16OS-16OS-SW - **(SAW "A")** | 1 |
| 2 | 65885 | HOSE, HYD, 787TC40 16-16OS-16OS-SW - **(SAW "B")** | 1 |
| 3 | 65640 - (65864 - KIT) | HOSE, HYD, 787TC46 16-16OS-20PH4-SW - **(SAW "B")** | 1 |
| 4 | 65639 - (65864 - KIT) | HOSE, HYD, 787TC48.5 16-16OS-20PH4-SW - **(SAW "A")** | 1 |

# H100-00780 - DISC SAW/BAR SAW COMBO PIPING - TOOL TILT (MAIN BOOM TO CYLINDER)

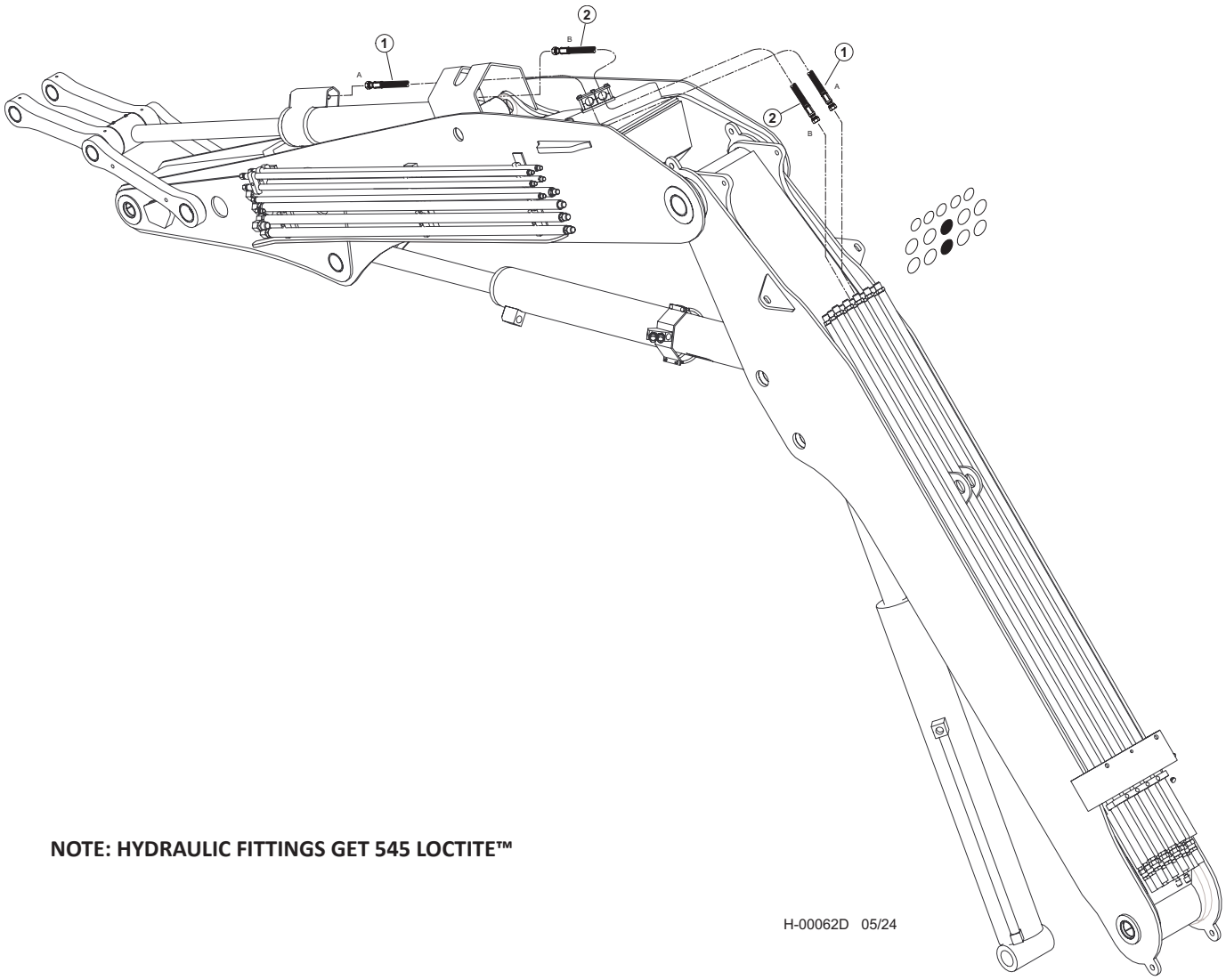


**NOTE: HYDRAULIC FITTINGS GET 545 LOCTITE™**

H-00062D 05/24

| Item | Part # | Description | Qty. |
|---|---|---|---|
| 1 | 65846 - (65837 - (KIT) | HOSE, HYD, 787TC160 16-16OS-16OS - (TOOL CYLINDER “A”) | 1 |
| 2 | 65847 - (65837 - (KIT) | HOSE, HYD, 787TC108 16-16OS-16OS - (TOOL CYLINDER “B”) | 1 |

# H100-00790 - DISC SAW/BAR SAW COMBO PIPING - STICK BOOM (MAIN BOOM TO STICK CYLINDER)

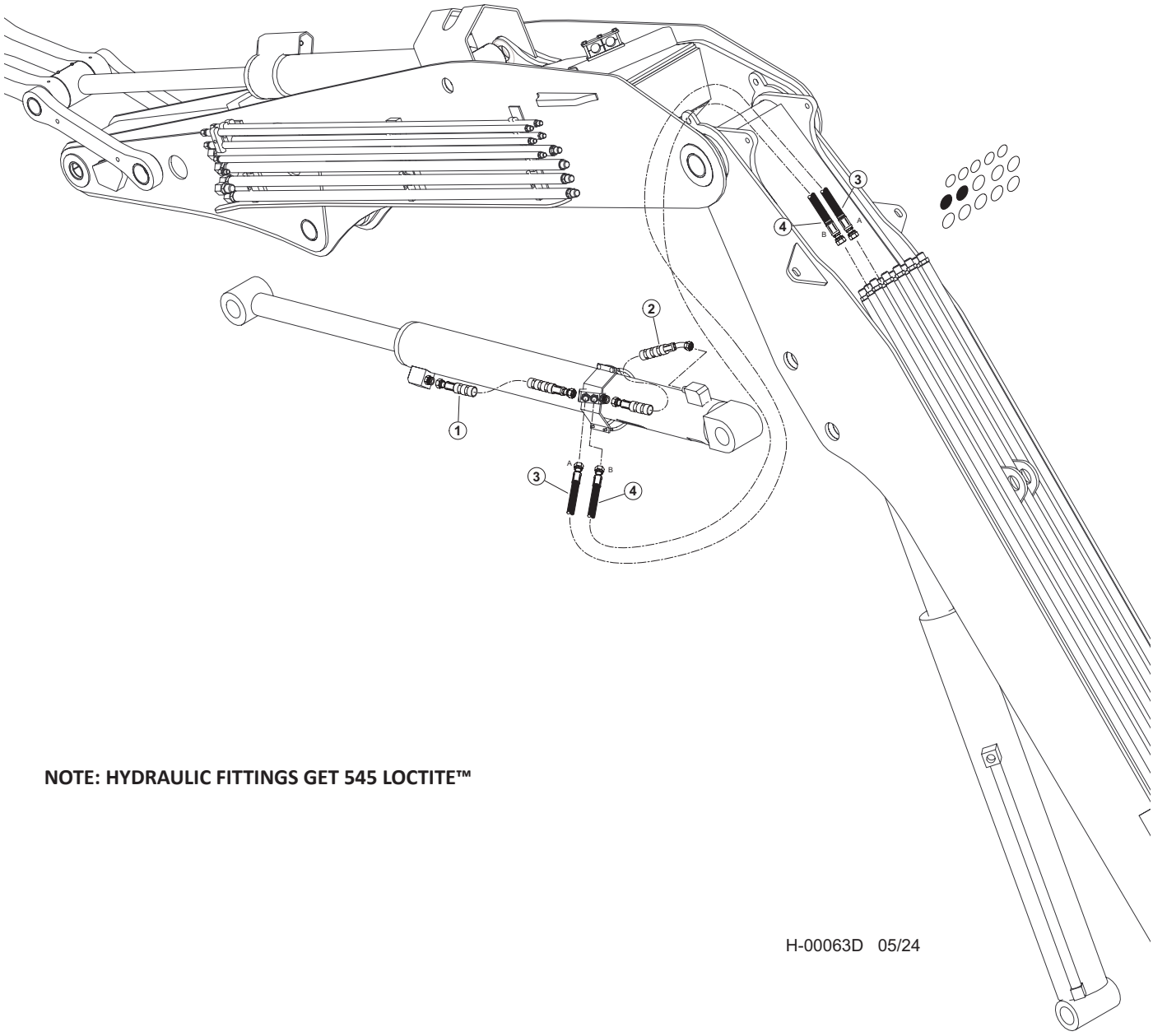


**NOTE: HYDRAULIC FITTINGS GET 545 LOCTITE™**

| Item | Part # | Description | Qty. |
|---|---|---|---|
| 1 | 65855 | HOSE, HYD, 787TC38 16-16OS-16OS-SW - (STICK CYLINDER ROD) | 1 |
| 2 | 65853 | HOSE, HYD, 787TC17 16-16OS-16O4-SW - (STICK CYLINDER BASE) | 1 |
| 3 | 65848 - (65837 - KIT) | HOSE, HYD, 787TC79 16-16OS-16OS - (STICK CYLINDER ROD - “A”) | 1 |
| 4 | 65849 - (65837 - KIT) | HOSE, HYD, 787TC81 16-16OS-16OS - (STICK CYLINDER BASE - “B”) | 1 |

# H100-00800 - DISC SAW/BAR SAW COMBO PIPING - SAW (MAIN BOOM TO STICK BOOM)

**NOTE: HYDRAULIC FITTINGS GET 545 LOCTITE™**

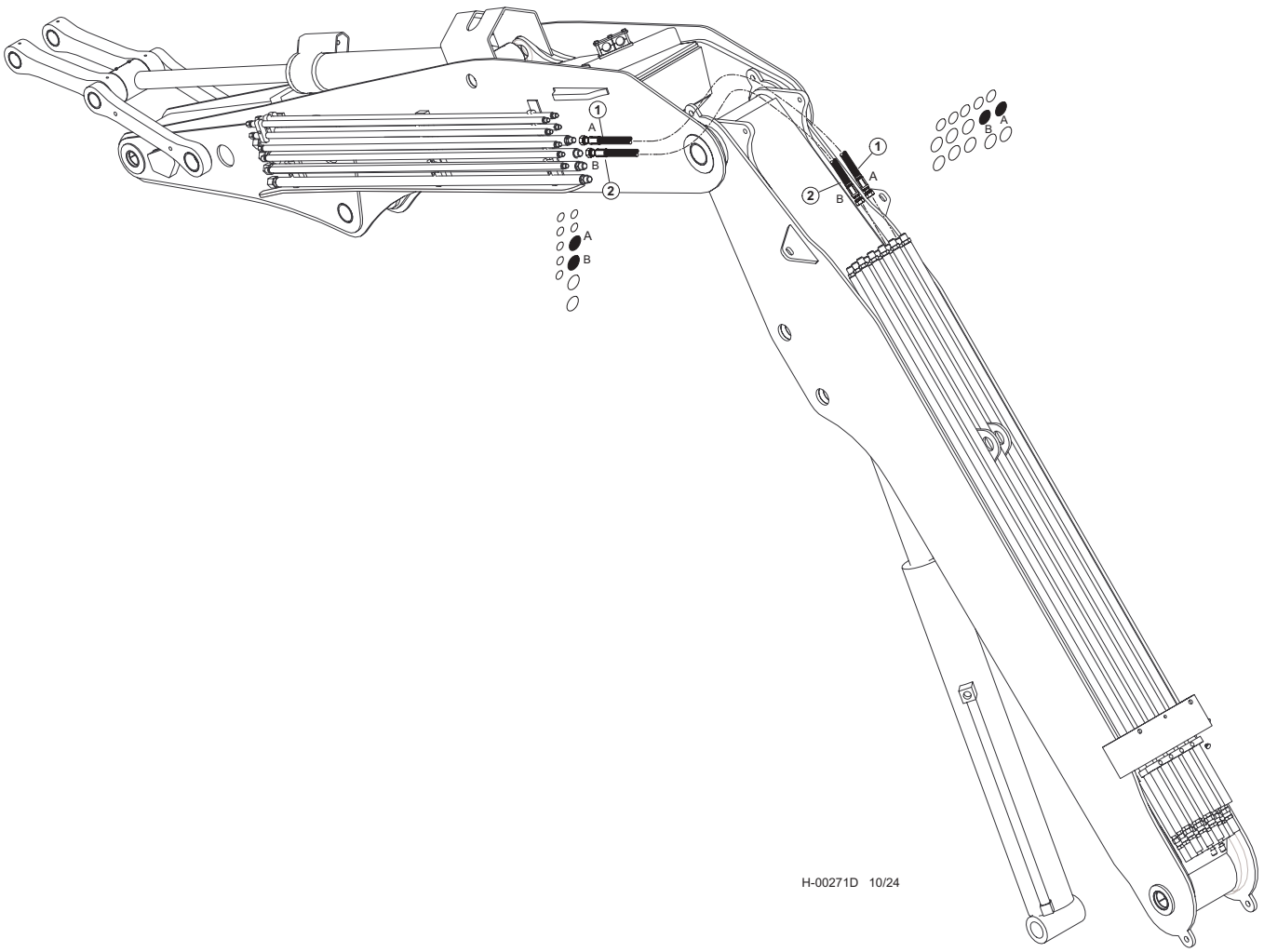


| Item | Part # | Description | Qty. |
|---|---|---|---|
| 1 | 65239 - (KIT 65896) | HOSE, HYD, 787TC76 16-16OS-16OS-SW - **(STICK CYLINDER ROD - "A")** | 1 |
| 2 | 65239 - (KIT 65896) | HOSE, HYD, 787TC76 16-16OS-16OS-SW - **(STICK CYLINDER BASE - "B")** | 1 |

# H100-00810 - DISC SAW/BAR SAW COMBO PIPING - CLAMP (MAIN BOOM TO STICK BOOM)

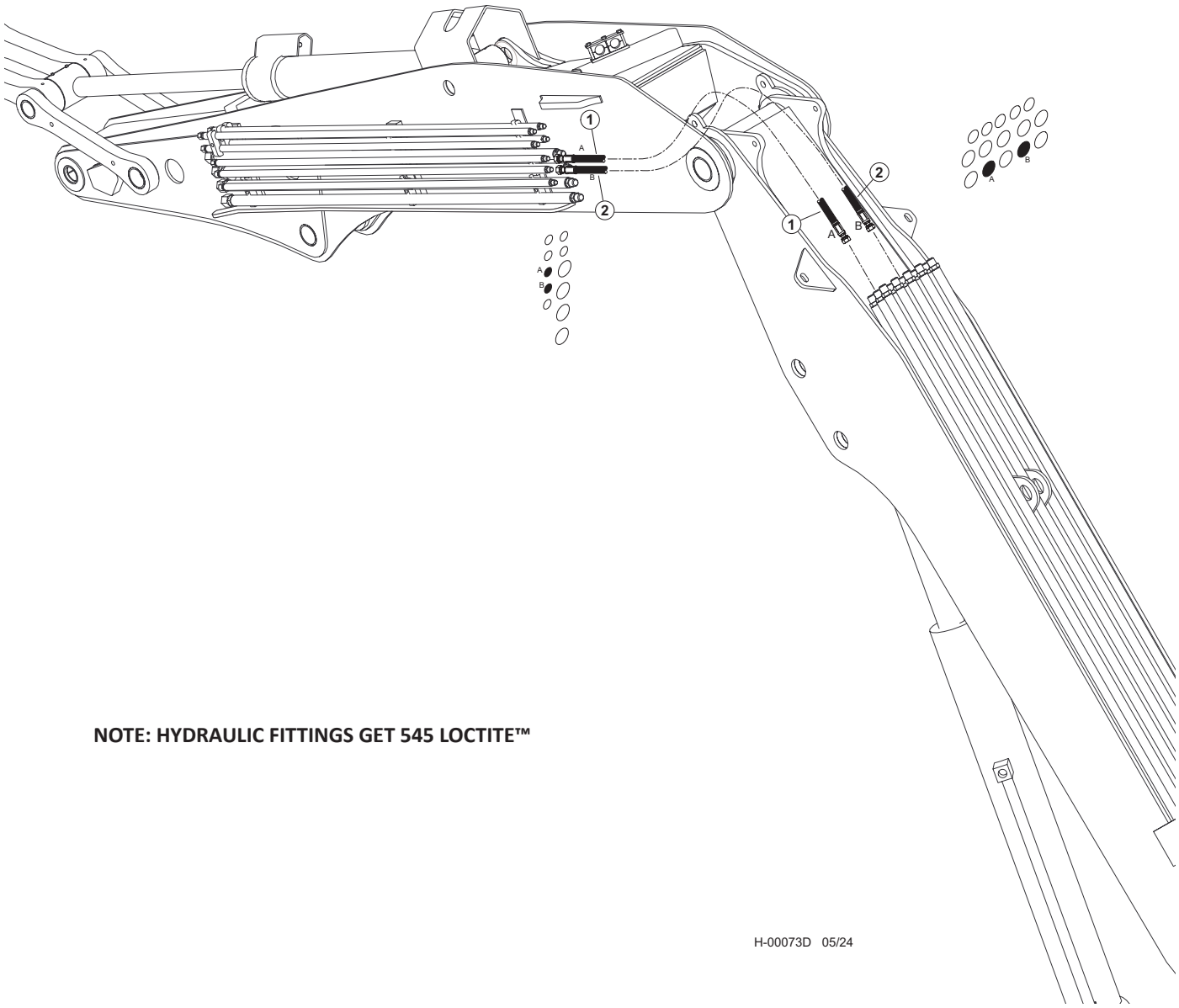


**NOTE: HYDRAULIC FITTINGS GET 545 LOCTITE™**

| Item | Part # | Description | Qty. |
|---|---|---|---|
| 1 | 65844 - (KIT 65837) | HOSE ASSY - 722TC72 12-12OS-12OS - (CLAMP “A”) | 1 |
| 2 | 65845 - (KIT 65837) | HOSE ASSY - 722TC76 12-12OS-12OS - (CLAMP “B”) | 1 |

# H100-00820 - DISC SAW/BAR SAW COMBO PIPING - ACCUMULATOR (MAIN BOOM TO STICK BOOM)

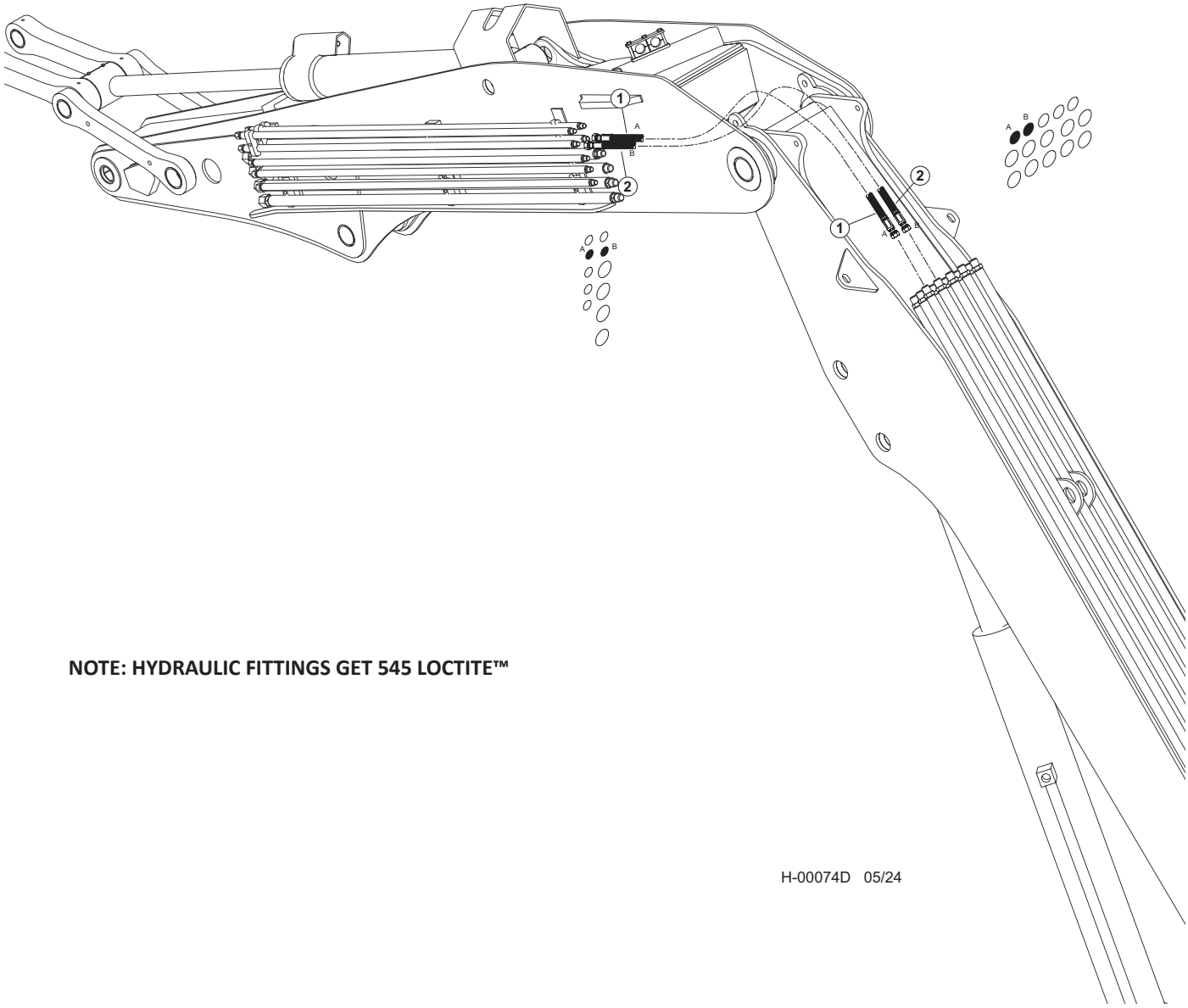


**NOTE: HYDRAULIC FITTINGS GET 545 LOCTITE™**

H-00074D 05/24

| Item | Part # | Description | Qty. |
|---|---|---|---|
| 1 | 65841 - (KIT 65837) | HOSE, HYD, 722TC80.5 10-10OS-10OS - (ACCUMULATOR - “A”) | 1 |
| 2 | 65841 - (KIT 65837) | HOSE, HYD, 722TC80.5 10-10OS-10OS - (ACCUMULATOR - “B”) | 1 |

# H100-00830 - DISC SAW/BAR SAW COMBO PIPING - LATERAL TILT (MAIN BOOM TO STICK BOOM)

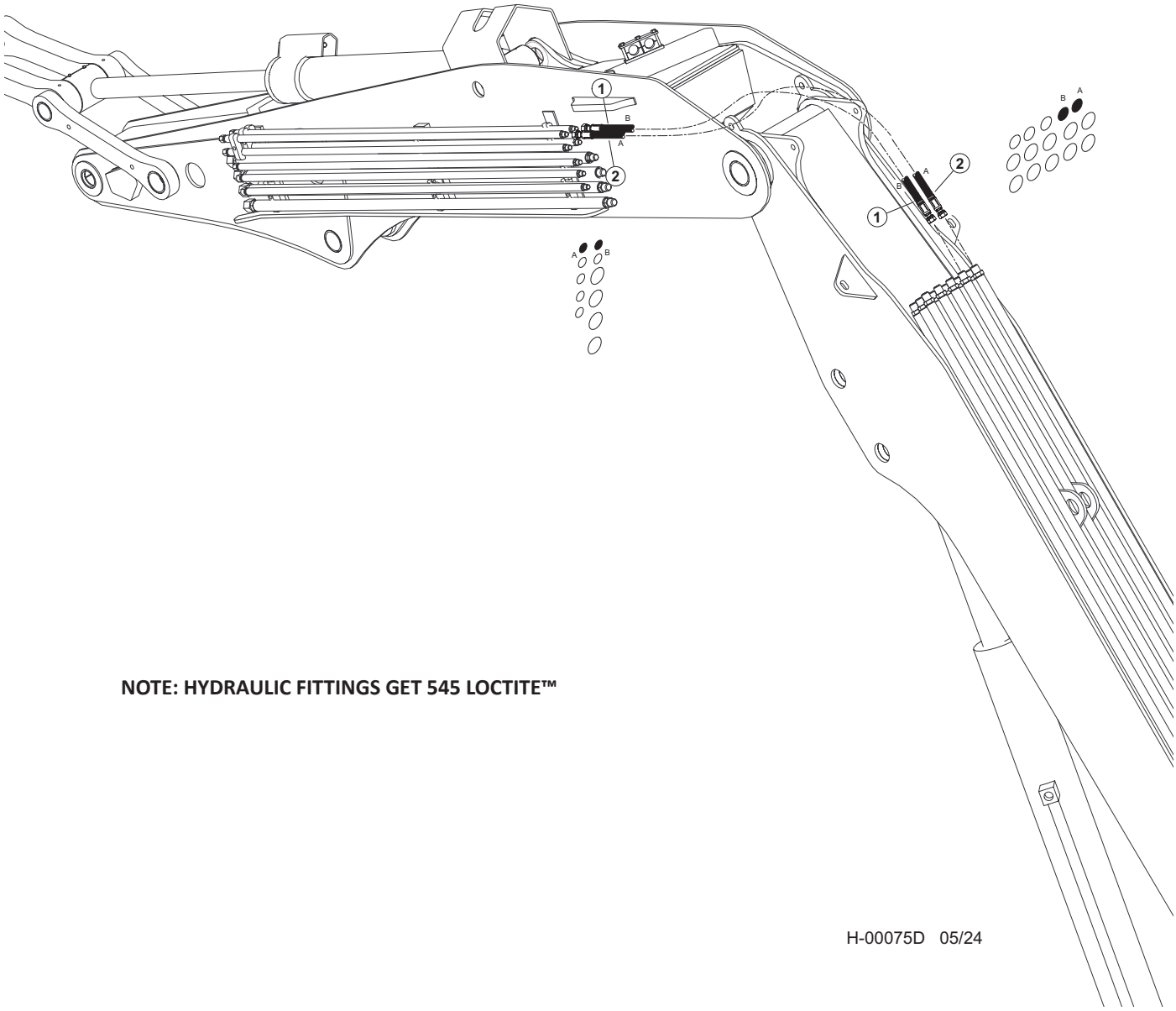


**NOTE: HYDRAULIC FITTINGS GET 545 LOCTITE™**

| Item | Part # | Description | Qty. |
|---|---|---|---|
| 1 | 65841 - (KIT 65837) | HOSE, HYD, 722TC82.5 10-10OS-10OS - (LATERAL TILT - “B”) | 1 |
| 2 | 65841 - (KIT 65837) | HOSE, HYD, 722TC82.5 10-10OS-10OS - (LATERAL TILT - “A”) | 1 |

# H100-00840 - DISC SAW/BAR SAW COMBO PIPING - PRESSURE & RETURN (MAIN BOOM TO STICK BOOM)

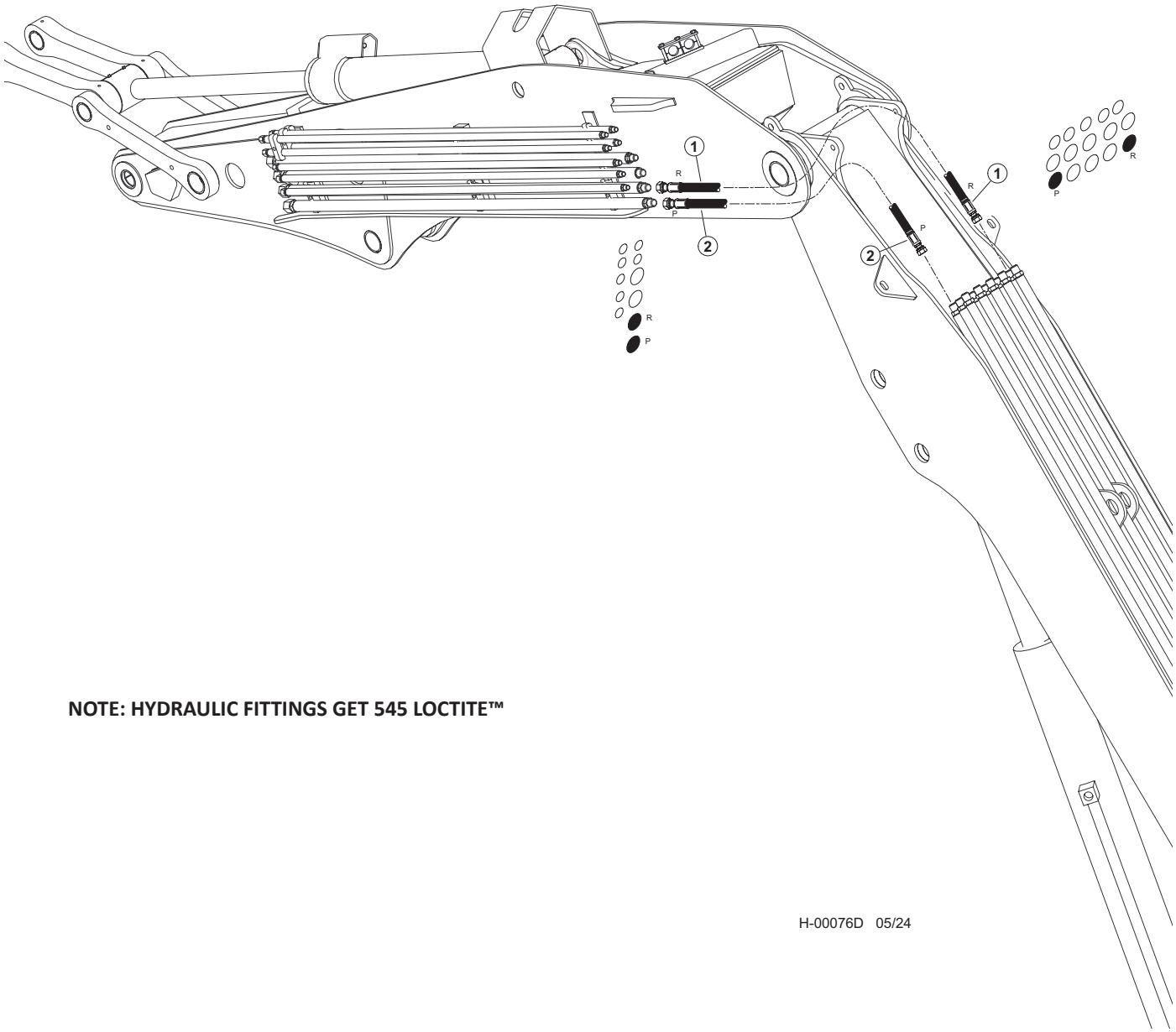


**NOTE: HYDRAULIC FITTINGS GET 545 LOCTITE™**

| Item | Part # | Description | Qty. |
|---|---|---|---|
| 1 | 65851 - (KIT 65837) | HOSE, HYD, 722TC77 16-16OS-16OS - (RETURN - “B”) | 1 |
| 2 | 65802 - (KIT 65837) | HOSE, HYD, 787TC70 16-16OS-16OS - (PRESSURE - “A”) | 1 |

# H100-00850 - DISC SAW/BAR SAW COMBO PIPING - CASE DRAIN (MAIN BOOM TO STICK BOOM)

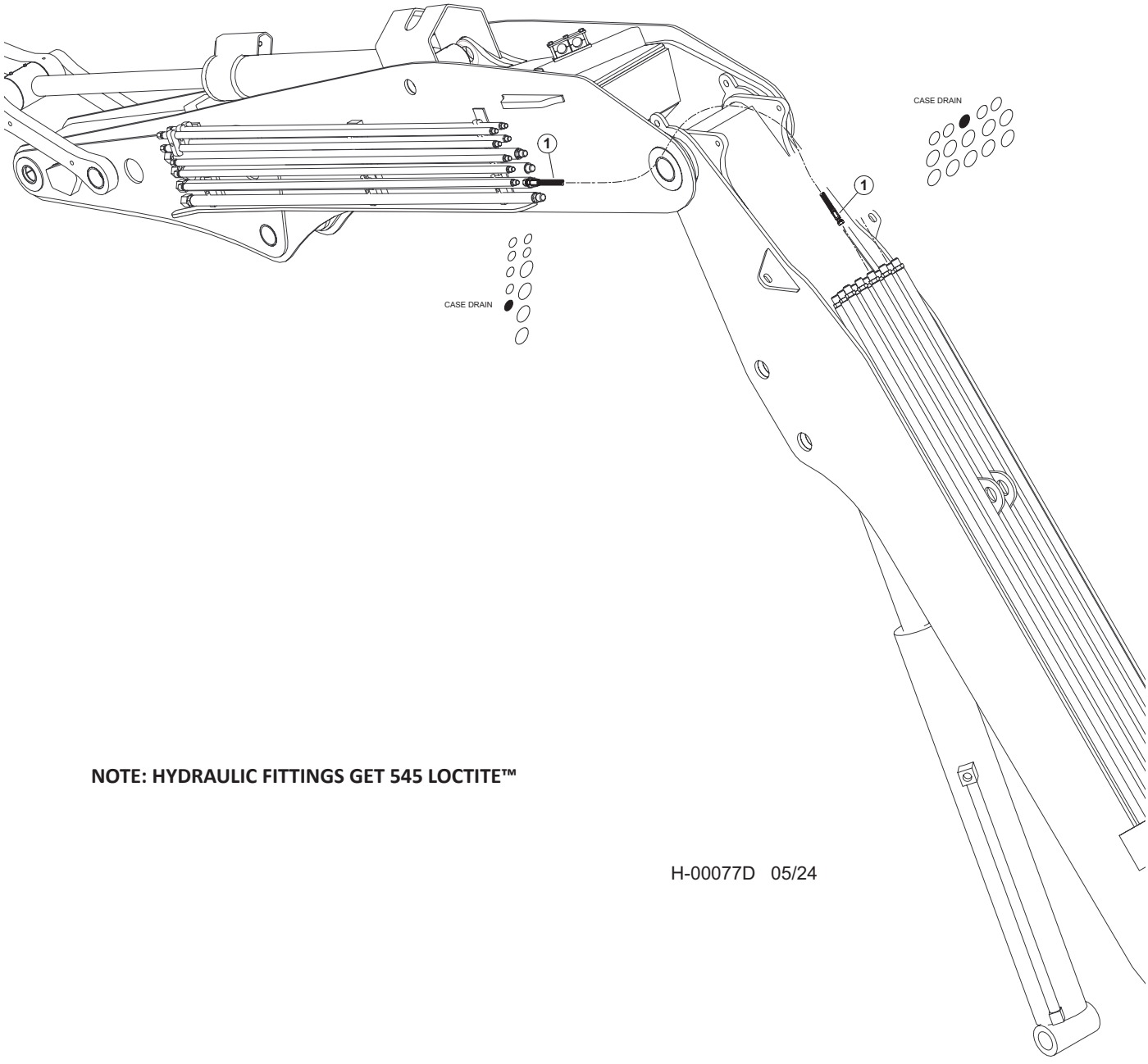


**NOTE: HYDRAULIC FITTINGS GET 545 LOCTITE™**

H-00077D 05/24

| Item | Part # | Description | Qty. |
|---|---|---|---|
| 1 | 65839 - (KIT 65837) | HOSE, HYD, 722TC79.5 08-08OS-08OS - (CASE DRAIN) | 1 |

# H100-00860 - DISC SAW/BAR SAW COMBO PIPING - LIGHT WIRE (MAIN BOOM TO STICK BOOM)

**NOTE: All HYDRAULIC FITTINGS GET (545 LOCTITE™)**

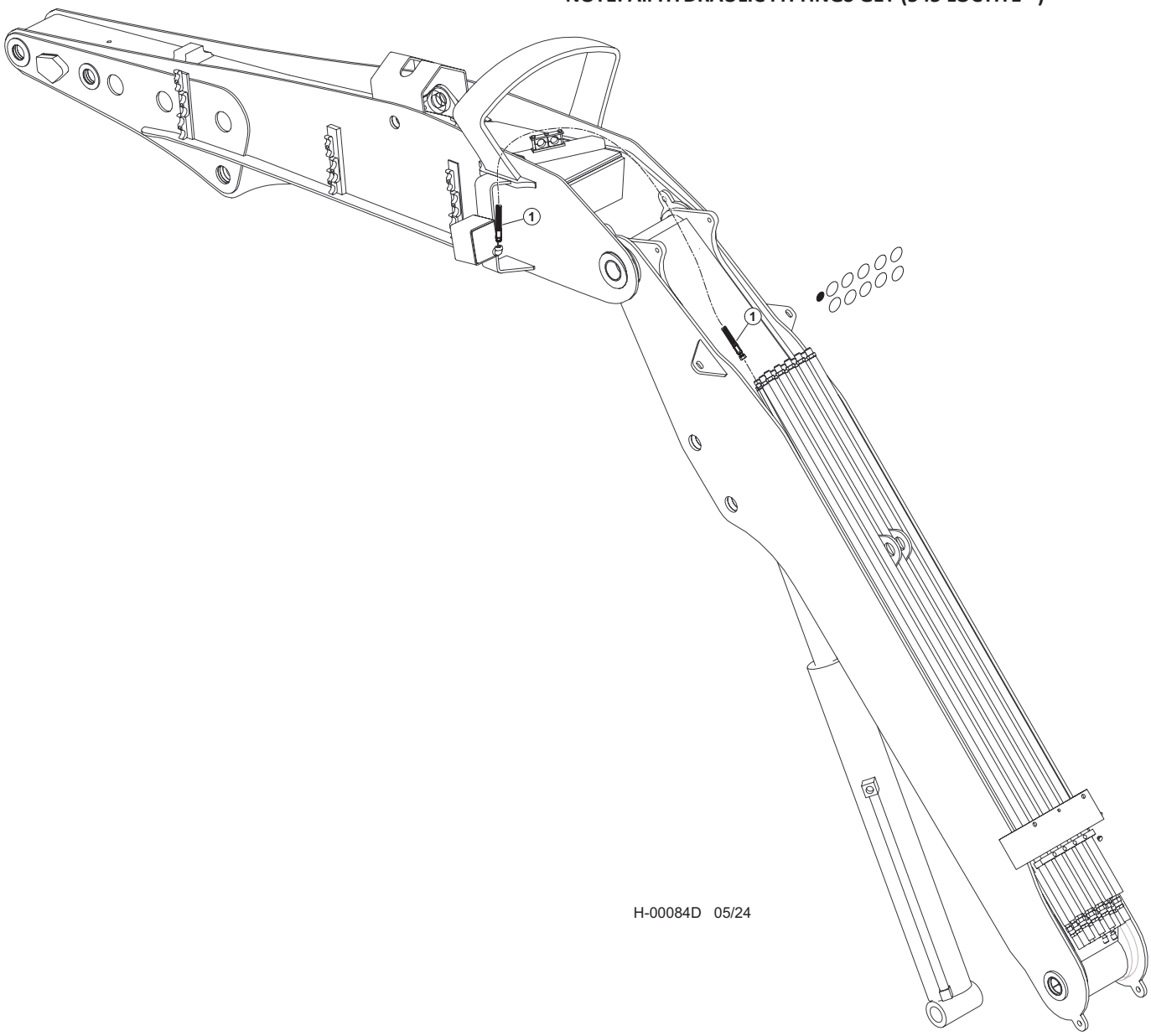


| Item | Part # | Description | Qty. |
|---|---|---|---|
| 1 | 65838 - (KIT 65837) | HOSE, HYD, 387TC84 06-06OS-08PS - (LIGHT WIRE) | 1 |

# H100-00870 - DISC SAW/BAR SAW COMBO PIPING - GREASE HOSES (MAIN BOOM TO STICK BOOM)

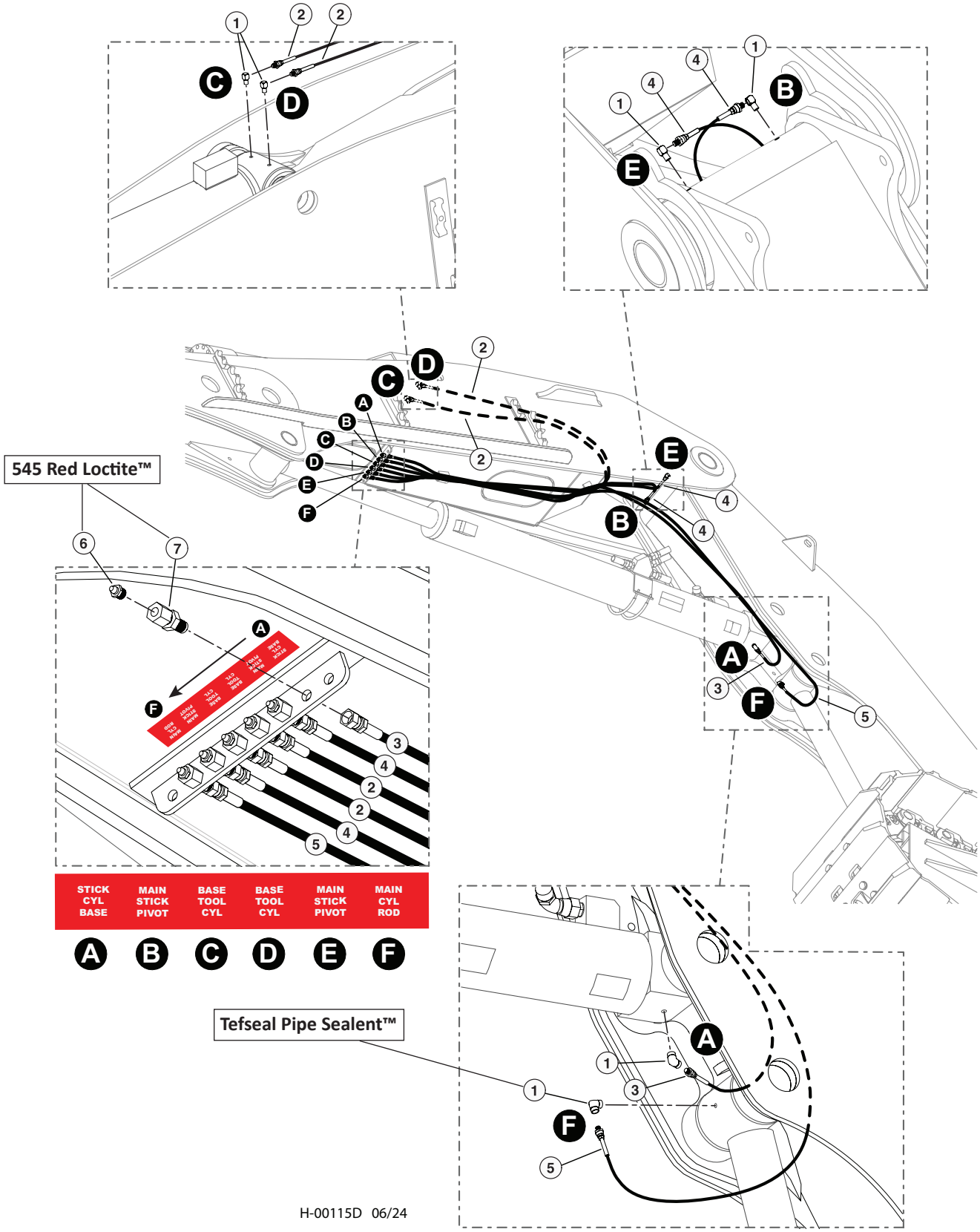


H-00115D 06/24

# H100-00870 - DISC SAW/BAR SAW COMBO PIPING - GREASE HOSES (MAIN BOOM TO STICK BOOM)

| Item | Part # | Description | Qty. |
|---|---|---|---|
| 1 | 22281 | FITTING, 90° - 5546132 **TEFSEAL PIPE SEALANT™** | 4 |
| 2 | 55605 - (KIT) | HOSE ASSY - 2133-02-02PS-04JS (TOOL CYL BASE) | 2 |
| 3 | 55605 - (KIT) | HOSE ASSY - 2138-02-02PS-04JS (STICK CYL BASE) | 1 |
| 4 | 55605 - (KIT) | HOSE ASSY - 2188-02-02PS-04JS (MAIN/STICK PIVOT) | 2 |
| 5 | 55605 - (KIT) | HOSE ASSY - 2147-02-02PS-04JS (MAIN CYL ROD) | 1 |
| 6 | 15658 | CONNECTOR, STRAIGHT BULKHEAD - 2239-2-4S **545 RED LOCTITE™** | 6 |
| 7 | 10704 | FITTING, STRAIGHT GREASE - 1/8” PIPE THREAD **545 RED LOCTITE™** | 6 |

# H100-00880 - MAIN BOOM PIPING - CONTROL FALL PROCESSOR

**NOTE: HYDRAULIC FITTINGS GET 545 LOCTITE™**

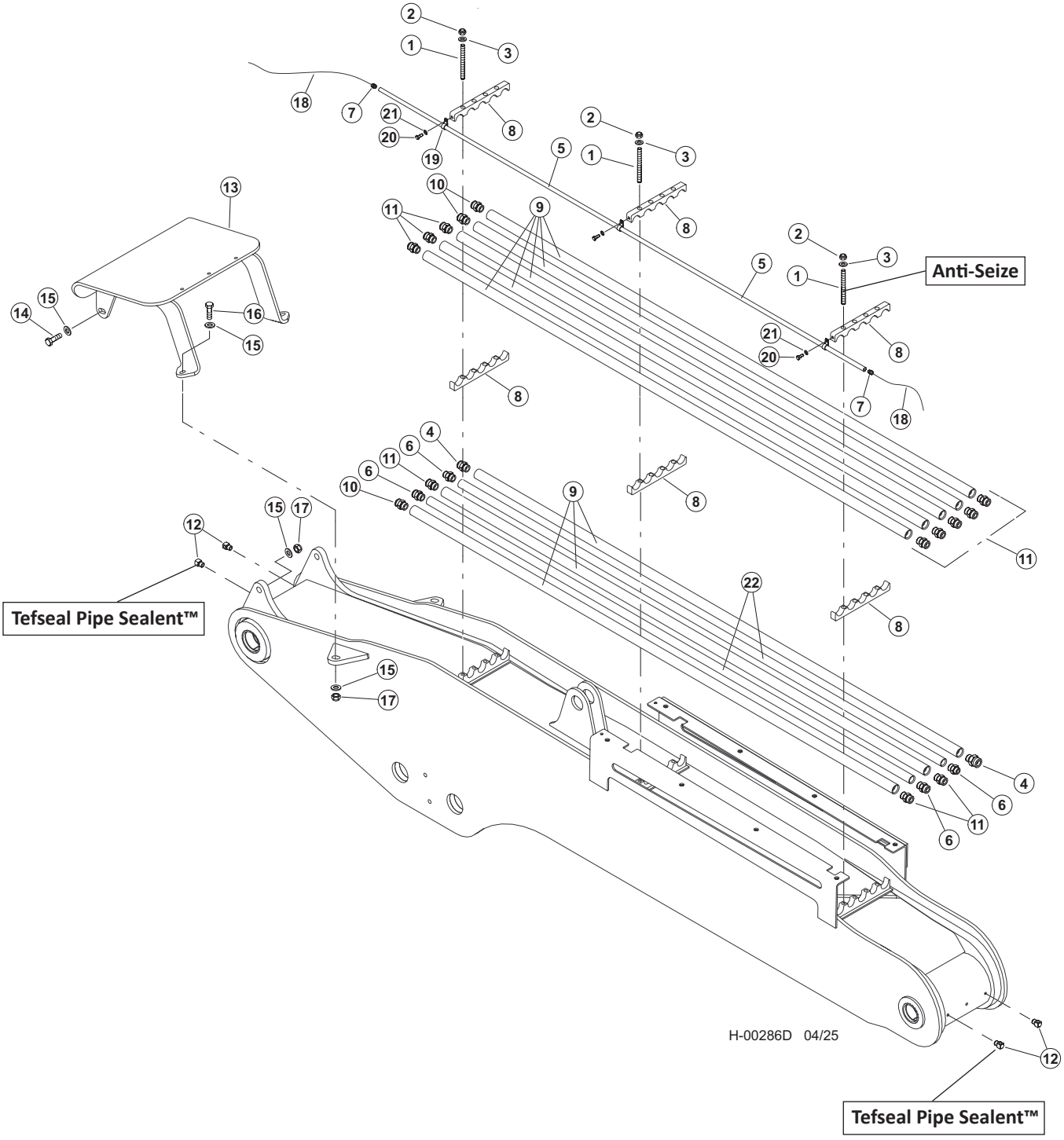

# H100-00880 - MAIN BOOM PIPING - CONTROL FALL PROCESSOR

| Item | Part # | Description | Qty. |
|---|---|---|---|
| 1 | 15672 | STUD - .625” X 6.25” **ANTI-SEIZE™** | 12 |
| 2 | 15563 | NUT, NYLOCK - .625” | 12 |
| 3 | 10771 | WASHER, SAE FLAT - .625 | 12 |
| 4 | 17063 - (KIT - 665410) | CONNECTOR, STR - FF1852T-2016S | 3 |
| 5 | 53116 | TUBELINE - .3/8” X 108” - BLACK PIPE | 1 |
| 6 | 52078 - (KIT - 665410) | CONNECTOR, STR - 10-16 F50LO-S | 4 |
| 7 | 51878 - (KIT - 665410) | CONNECTOR, STR - MALE PIPE (6-6 FLO-S) | 2 |
| 8 | 52155 | CLAMP, SADDLE - DRILLED (5-1” TUBES) | 6 |
| 9 | 51833 | TUBELINE - 1” X 108” FB MAIN | 8 |
| 10 | 15226 - (KIT - 665410) | CONNECTOR, STR - FF1852T-1216S | 3 |
| 11 | 15225 - (KIT - 665410) | CONNECTOR, STR - FF1852T-1616S | 10 |
| 12 | 22281 | ELBOW, 1/8-27 NPTF(M), 1/8-17 NPTF(F),90 **TEFSEAL PIPE SEALENT™** | 4 |
| 13 | 53927 | GUARD, HOSE - MAIN BOOM (FB) | 1 |
| 14 | 10840 | BOLT - .75” X 3” | 2 |
| 15 | 10806 | WASHER, 3/4” USS TRU-TORQ | 8 |
| 16 | 58398 | BOLT - .75” X 2.75” | 2 |
| 17 | 10817 | NUT, 3/4-10 UNC | 4 |
| 18 | 58380 | CABLE | 30’ |
|  | 53218 | WIRE - PROCESSING HEAD CABLE (7 WIRES) | 40’ |
| 19 | 53265 | CLAMP, CUSHIONED LOOP - 5/8” (BOOM) | 3 |
| 20 | 23264 | BOLT - .25” X .5” | 3 |
| 21 | 10757 | WASHER, SAE FLAT - .25” | 3 |
| 22 | 51815 | TUBELINE - .5” X 108” | 2 |

# H100-00890 - STICK BOOM PIPING - CONTROL FALL PROCESSOR

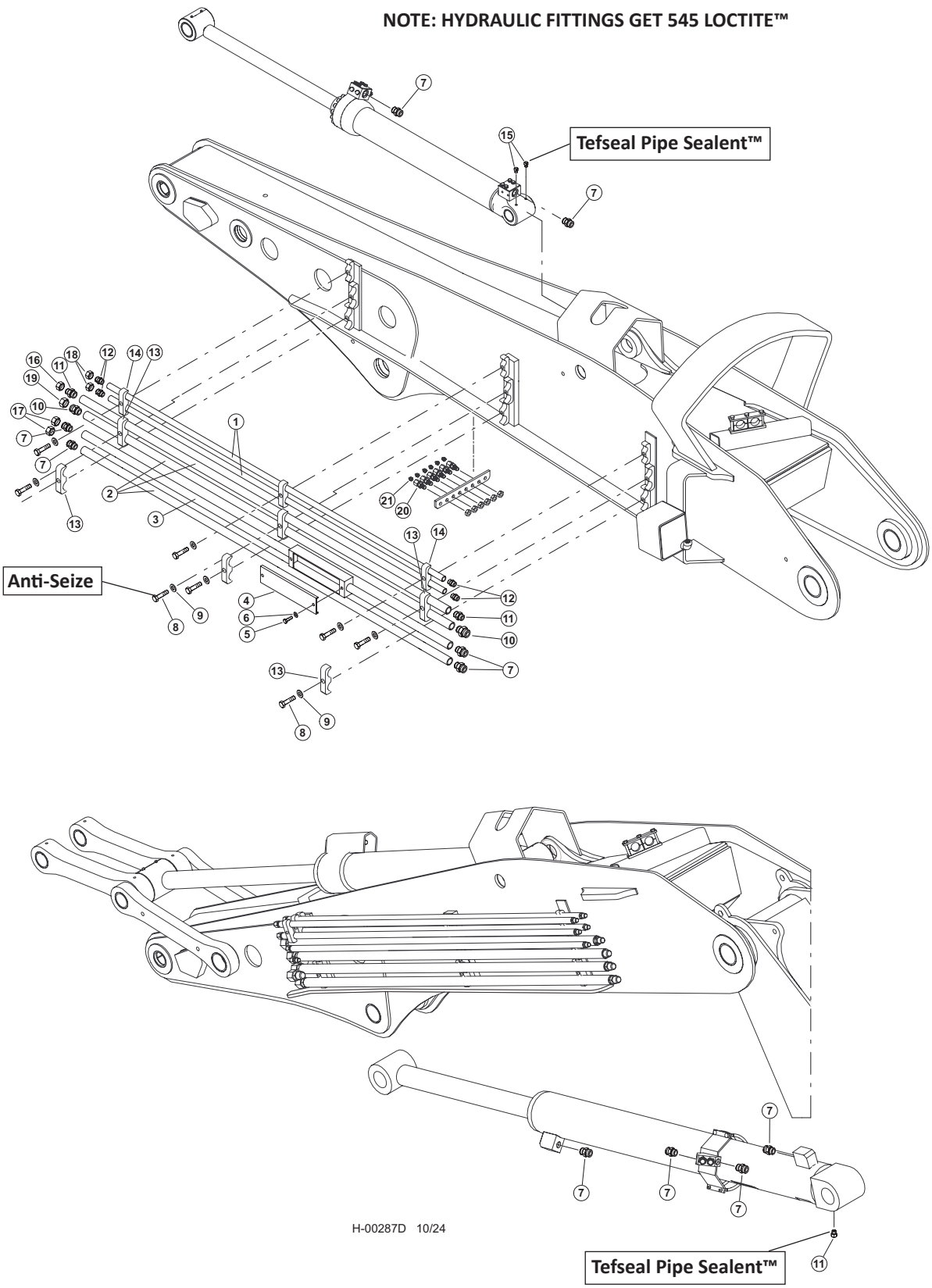

# H100-00890 - STICK BOOM PIPING - CONTROL FALL PROCESSOR

| Item | Part # | Description | Qty. |
|---|---|---|---|
| 1 | 16513 | TUBELINE - .5” X 80” | 2 |
| 2 | 16506 | TUBELINE - 1” X 84” | 3 |
| 3 | 60264 | TUBELINE, J-BOX | 1 |
| | 19681 | TUBELINE - 1” X 48” | 1 |
| | 19497 | TUBELINE - 1” X 24” | 1 |
| 4 | 53649 | BOX JUCTION - COVER | 1 |
| 5 | 23264 | BOLT - .25” X .5” | 2 |
| 6 | 10757 | WASHER, FLAT - .25” | 2 |
| 7 | 15525 - (KIT - 57403) | CONNECTOR, STR - FF1852T-1616S | 6 |
| 8 | 15517 | BOLT - .625” X 2.5” **ANTI -SEIZE** | 9 |
| 9 | 10771 | WASHER, FLAT - .625” | 9 |
| 10 | 17063 - (KIT - 57403) | CONNECTOR, STR - FF1852T-2016S | 2 |
| 11 | 15226 - (KIT - 57403) | CONNECTOR, STR - FF1852T-1216S **TEFSEAL PIPE SEALENT™** | 2 |
| 12 | 15117 - (KIT - 57403) | CONNECTOR, STR - FF1852T-0808S | 4 |
| 13 | 12447 | CLAMP, SADDLE TOP TUBE - 1” & 1” | 6 |
| 14 | 15272 | CLAMP, SADDLE TOP TUBE - .5” & .5” | 3 |
| 15 | 57623 - (KIT - 57403) | ELBOW, 1/8 FEMALE/FEMALE DD-S **TEFSEAL PIPE SEALENT™** | 3 |
| 16 | 15437 - (KIT - 57403) | CAP - FF9863-12S | 1 |
| 17 | 15436 - (KIT - 57403) | CAP - FF9863-16S | 2 |
| 18 | 15434 - (KIT - 57403) | CAP - FF9863-08S | 2 |
| 19 | 17075 - (KIT - 57403) | CAP - FF9863-20S | 1 |
| 20 | 15658 - (KIT - 57403) | CONNECTOR, STR BULKHEAD - 2239-2-4S | 6 |
| 21 | 59122 | ZERK, GREASE - 1/8-27 NPTF, ST | 6 |

# H100-00900 - CONTROL FALL PROCESSOR PIPING - PRESSURE, RETURN, CASE DRAIN & LOAD SENSE - (K220/L90 VALVE) -VALVE TO BOOM

**NOTE: HYDRAULIC FITTINGS GET 545 LOCTITE™**

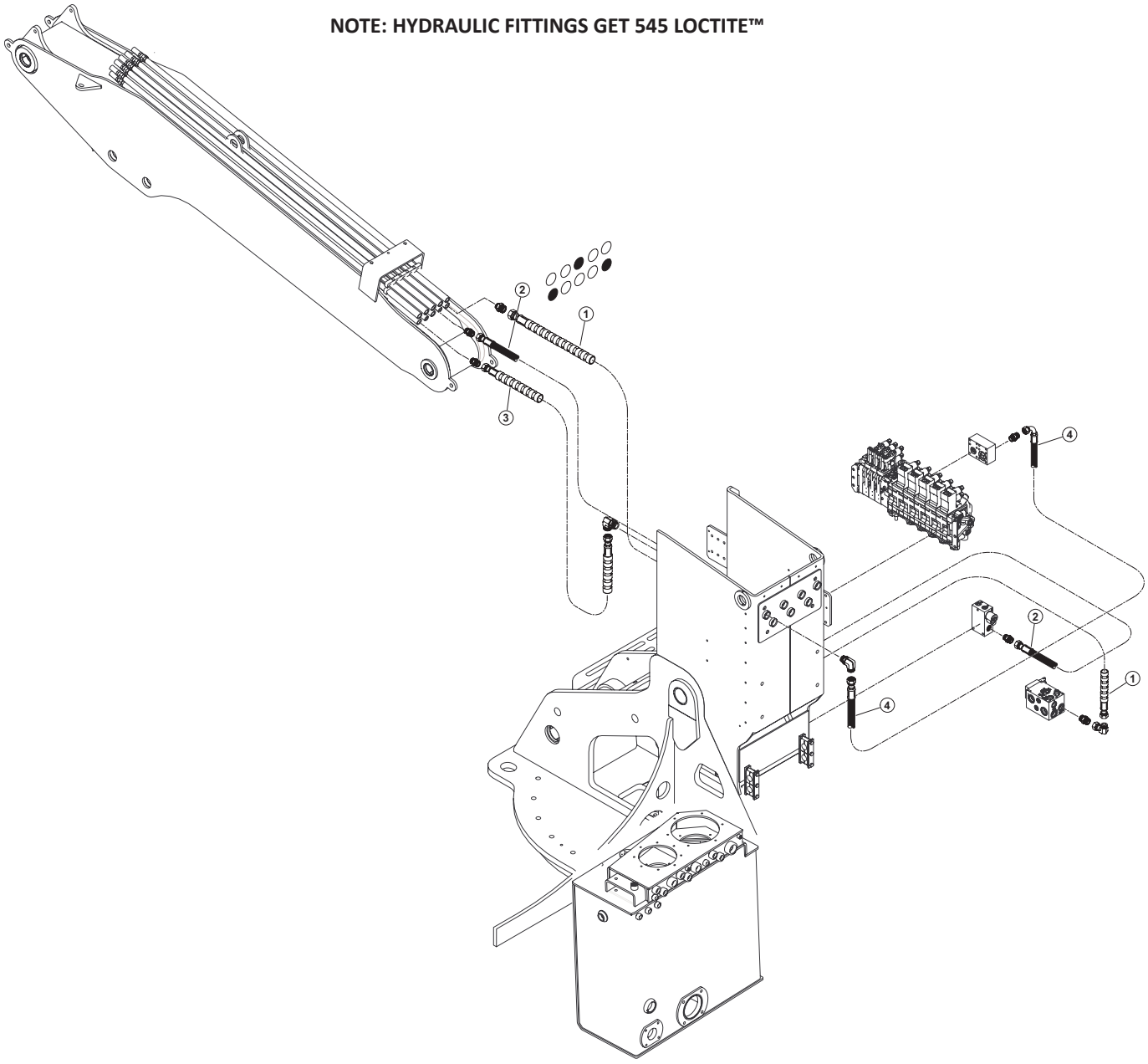


H-00080D 05/24

| Item | Part # | Description | Qty. |
|---|---|---|---|
| 1 | 57977 - (KIT) | HOSE ASSY - 187TC58 20-20JS-20OS-SW - (ATTACHMENT RETURN) | 1 |
| 2 | 57977 - (KIT) | HOSE ASSY - 187TC56 12-12OS-12OS-W - (ATTACHMENT CASE DRAIN) | 1 |
| 3 | 57977 - (KIT) | HOSE ASSY - 787TC39 16-16OS-16OS-SW - (ATTACHMENT PRESSURE) | 1 |
| 4 | (SEE DESCRIPTION) | HOSE ASSY - 787TC32 16-16OS-16O9 - (ATTACHMENT PRESSURE) | 1 |

# H-2258300, 2258400 - CONTROL FALL PROCESSOR PIPING - SAW PRESSURE, RETURN, CASEDRAIN & LOAD SENSE

**NOTE: HYDRAULIC FITTINGS GET 545 LOCTITE™**

**NOTE: APPLY GREASE TO O-RINGS**

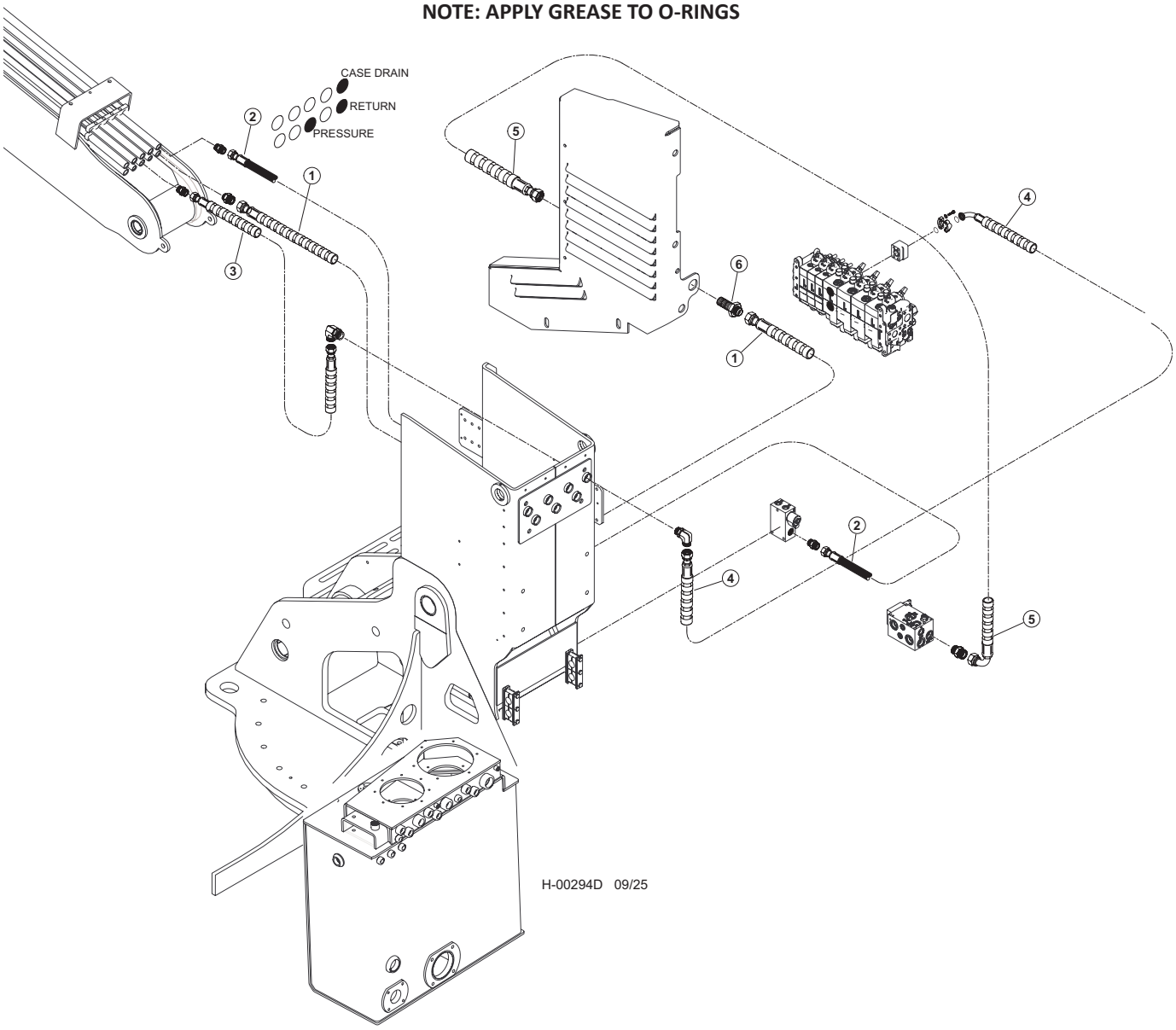


| Item | Part # | Description | Qty. |
|---|---|---|---|
| 1 | 689410 - (664481 - KIT) | HOSE, HYD, 187TC44 20-20JS-20OS-SW **- (DISC SAW RETURN)** | 1 |
| 2 | 66379 - (664480 - KIT) | HOSE, HYD, 187TC54 12-12OS-12OS-W **- (ATTACHMENT CASE DRAIN)** | 1 |
| 3 | 65885 - (664480 - KIT) | HOSE, HYD, 787TC40 16-16OS-16OS-SW **- (VALVE PRESSURE)** | 1 |
| 4 | 65640 - (65813 - KIT) | HOSE, HYD, 787TC46 16-16OS-20PH4-SW **- (VALVE PRESSURE)** | 1 |
| 5 | 689400 - (664481 - KIT) | HOSE, HYD, 187TC44 20-20JS-20J9-SW **- (RETURN)** | 1 |
| 6 | 57491- (57950- KIT) | FITTING, 20 WTX-WLN-S | 1 |

# H100-00920 - CONTROL FALL PROCESSOR PIPING - TOOL TILT (K220/L90 VALVE) MAIN VALVE TO BOOM

**NOTE: HYDRAULIC FITTINGS GET 545 LOCTITE™**

**NOTE: APPLY GREASE TO O-RINGS**

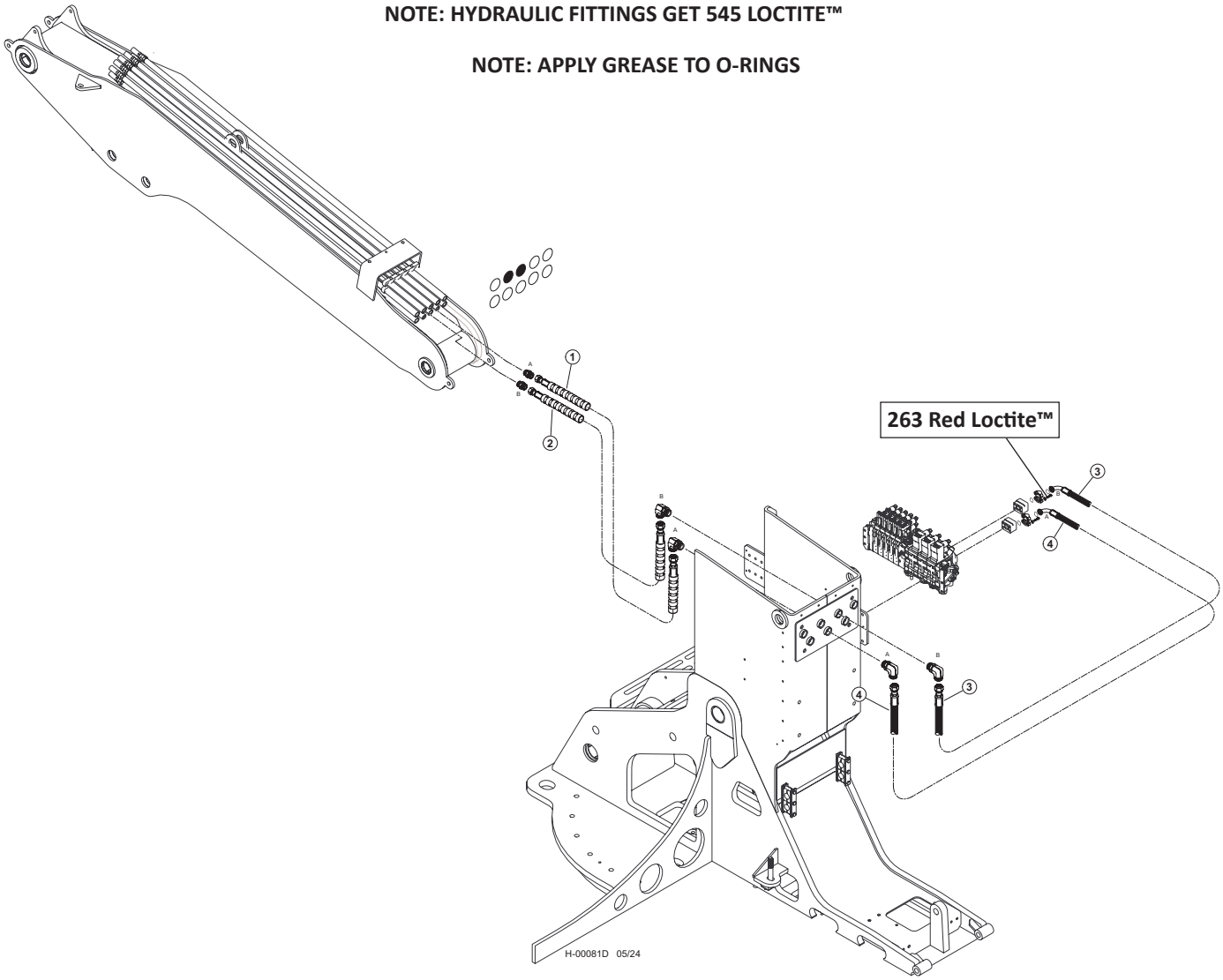


| Item | Part # | Description | Qty. |
|---|---|---|---|
| 1 | (SEE DESCRIPTION) | HOSE ASSY - 722TC40 16-16OS-16OS-SW - (TOOL CYLINDER “A”) | 1 |
| 2 | (SEE DESCRIPTION) | HOSE ASSY - 722TC39 16-16OS-16OS-SW - (TOOL CYLINDER “B”) | 1 |
| 3 | (SEE DESCRIPTION) | HOSE ASSY - 722TC38 16-16OS-16PA9 - (TOOL CYLINDER “B”) | 1 |
| 4 | (SEE DESCRIPTION) | HOSE ASSY - 722TC37 16-16OS-16PA9 - (TOOL CYLINDER “A”) | 1 |

# H200-00360 - CONTROL FALL PROCESSOR PIPING - TOOL TILT (W450/W300 VALVE) MAIN VALVE TO BOOM

**NOTE: HYDRAULIC FITTINGS GET 545 LOCTITE™**

**NOTE: APPLY GREASE TO O-RINGS**

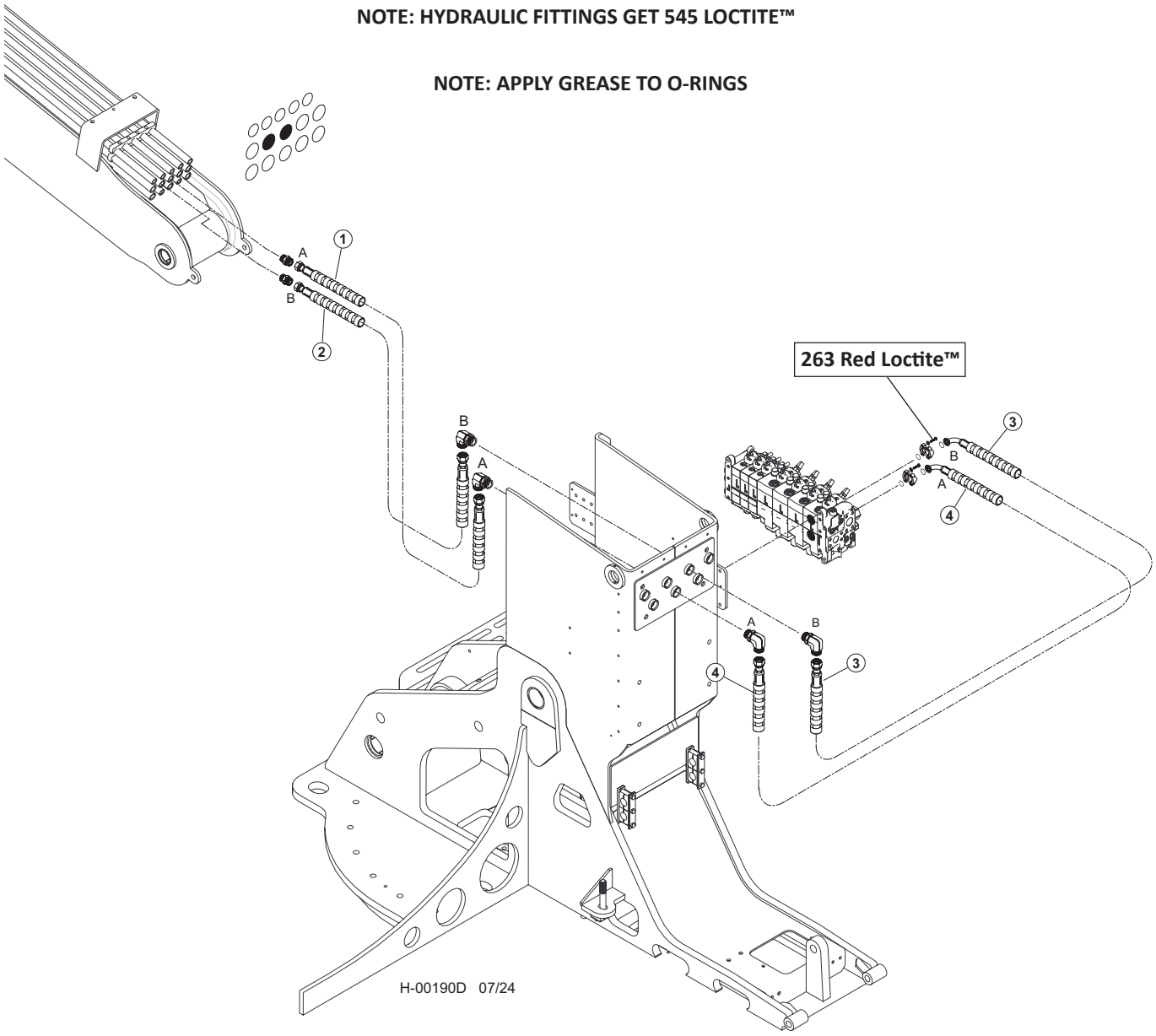


| Item | Part # | Description | Qty. |
|---|---|---|---|
| 1 | 65885 - (664480 - KIT) | HOSE, HYD, 787TC40 16-16OS-16OS-SW **("A" PORT - CHIMNEY TO BOOM)** | 1 |
| 2 | 65884 - (664480 - KIT) | HOSE, HYD, 787TC39 16-16OS-16OS-SW **("B" PORT - CHIMNEY TO BOOM)** | 1 |
| 3 | 65858 - (65813 - KIT) | HOSE, HYD, 787TC36.5 16-16OS-20PH9-SW **("B" PORT - VALVE TO CHIMNEY)** | 1 |
| 4 | 65640 - (65813 - KIT) | HOSE, HYD, 787TC36 16-16OS-20PH9-SW **("A" PORT - VALVE TO CHIMNEY)** | 1 |

# H100-00930 - CONTROL FALL PROCESSOR PIPING - STICK BOOM CYLINDER (K220/L90 VALVE) - MAIN VALVE TO BOOM

**NOTE: HYDRAULIC FITTINGS GET 545 LOCTITE™**

**NOTE: APPLY GREASE TO O-RINGS**

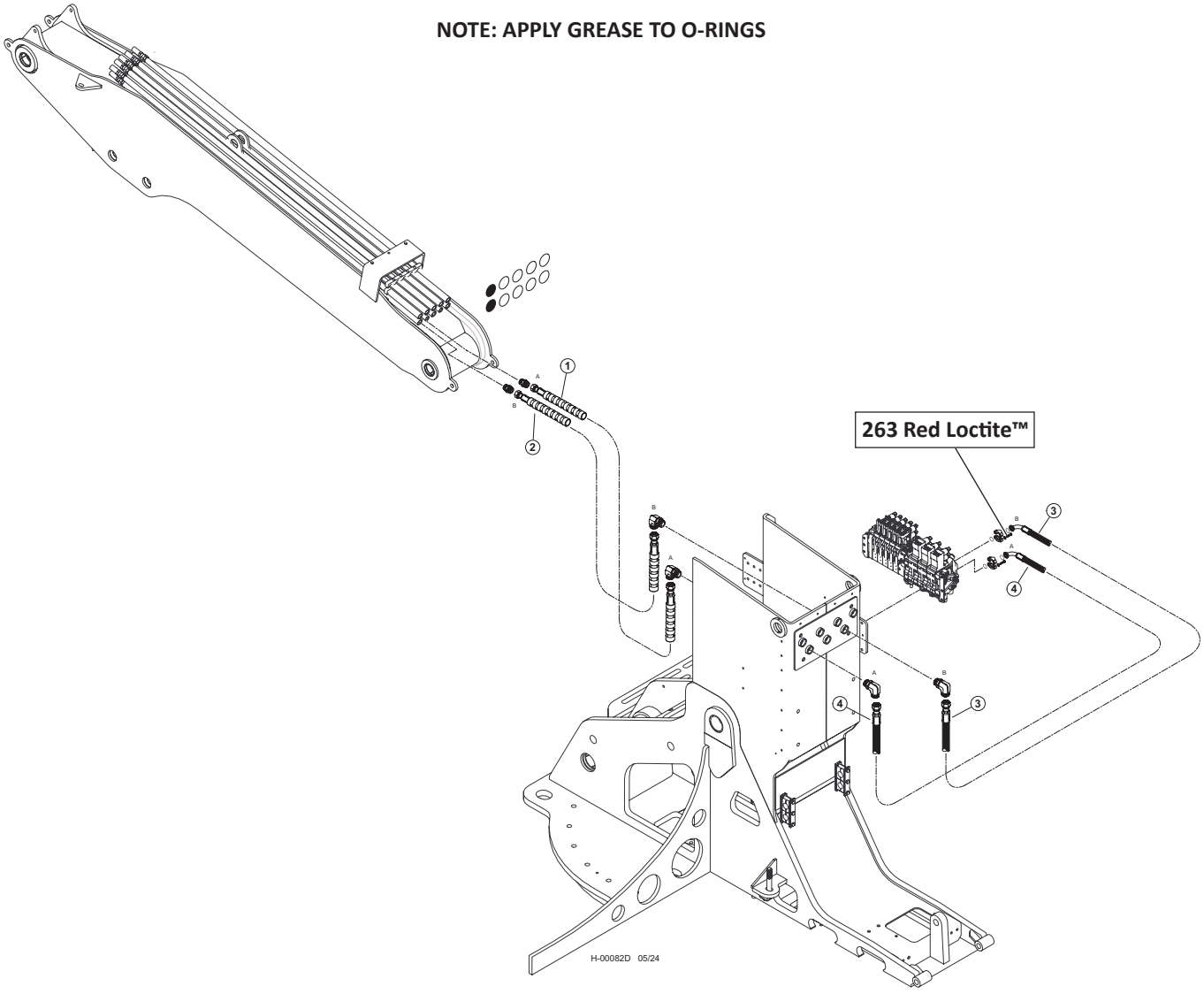


| Item | Part # | Description | Qty. |
|---|---|---|---|
| 1 | (SEE DESCRIPTION) | HOSE ASSY - 722TC39 16-16OS-16OS-SW - (STICK CYLINDER “A”) | 1 |
| 2 | (SEE DESCRIPTION) | HOSE ASSY - 722TC39 16-16OS-16OS-SW - (STICK CYLINDER “B”) | 1 |
| 3 | (SEE DESCRIPTION) | HOSE ASSY - 722TC40 16-16OS-16PA9 - (STICK CYLINDER “B”) | 1 |
| 4 | (SEE DESCRIPTION) | HOSE ASSY - 722TC39 16-16OS-16PA9 - (STICK CYLINDER “A”) | 1 |

# H200-00370 - CONTROL FALL PROCESSOR PIPING - STICK BOOM CYLINDER (W450/W300 VALVE)

**NOTE: HYDRAULIC FITTINGS GET 545 LOCTITE™**

**NOTE: APPLY GREASE TO O-RINGS**

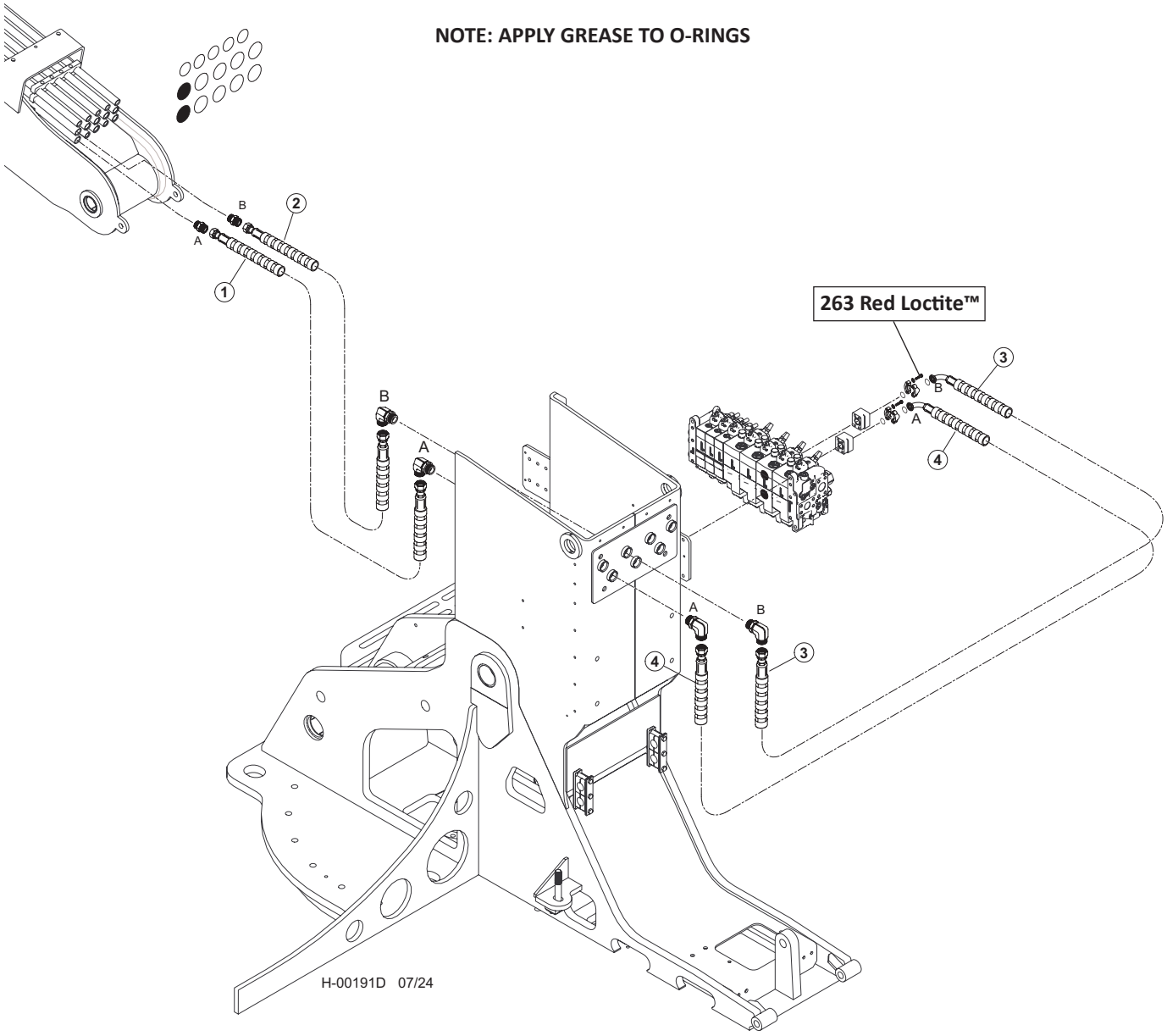


| Item | Part # | Description | Qty. |
|---|---|---|---|
| 1 | 65885 - (65813 - KIT) | HOSE, HYD, 787TC40 16-16OS-16OS-SW **("A" PORT - CHIMNEY TO BOOM)** | 1 |
| 2 | 65884 - (65813 - KIT) | HOSE, HYD, 787TC39 16-16OS-16OS-SW **("B" PORT - CHIMNEY TO BOOM)** | 1 |
| 3 | 65859 - (664480 - KIT) | HOSE, HYD, 787TC36.5 16-16OS-20PH9-SW **("B" PORT - VALVE TO CHIMNEY)** | 1 |
| 4 | 65615 - (664480 - KIT) | HOSE, HYD, 787TC36 16-16OS-20PH9-SW **("A" PORT - VALVE TO CHIMNEY)** | 1 |

# H200-00940 - CONTROL FALL PROCESSOR PIPING - MAIN BOOM (K220/L90 VALVE)
# MAIN VALVE TO BOOM

**NOTE: HYDRAULIC FITTINGS GET 545 LOCTITE™**

**NOTE: APPLY GREASE TO O-RINGS**

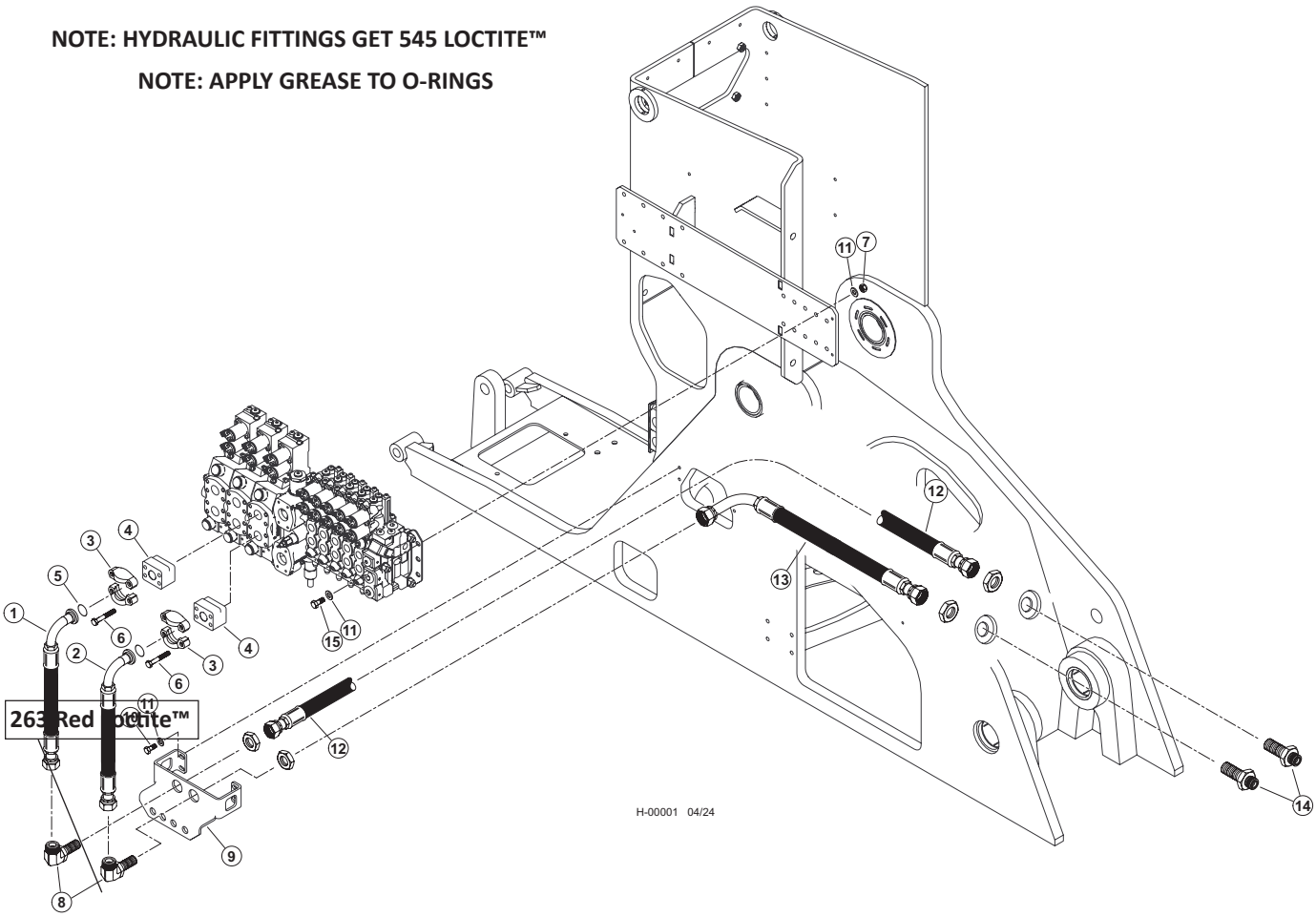


| Item | Part # | Description | Qty. |
|---|---|---|---|
| 1 | 59741 - (KIT) | HOSE ASSY - 787TC35.5 16-16OS-16PA9 - (BOOM “B”) | 1 |
| 2 | 59741 - (KIT) | HOSE ASSY - 787TC31 16-16OS-16PA9 - (BOOM “A”) | 1 |
| 3 | 15111 | KIT, SPLIT FLANGE CODE 61 1 INCH | 2 |
| 4 | 46248 | MANIFOLD, VALVE BLOCK SAE 1” CODE 62 | 2 |
| 5 | 15377 | O-RING - 1” SF | 2 |
| 6 | 55664 | BOLT, ALLEN HEAD - 10MM-1.5P X 80MM **263 RED LOCTITE™** | 8 |
| 7 | 10813 | NUT, LOCK - .375” | 4 |
| 8 | 53680 | FITTING, BULKHEAD UNION ELBOW 16 WELO-WN | 2 |
| 9 | 60559 | BULHEAD, FRONT - TM | 1 |
| 10 | 15542 | BOLT - .375” X .75” | 4 |
| 11 | 15528 | WASHER, SAE FLAT - .375” | 12 |
| 12 | 59741 - (KIT) | HOSE ASSY - 787TC43 16-16OS-16OS<br>**(MAIN BOOM CYLINDER BASE END BULKHEAD TO BULKHEAD PLATE)** | 1 |
| 13 | 59741 - (KIT) | HOSE ASSY - 787TC30 16-16OS-16O9L<br>**(MAIN BOOM CYLINDER ROD END BULKHEAD TO BULKHEAD PLATE)** | 1 |
| 14 | 54316 | ELBOW, BULKHEAD UNION 45DEG #16 | 2 |
| 15 | 10402 | BOLT - .375” X 1.25” | 4 |

# H200-00380 - CONTROL FALL PROCESSOR PIPING - MAIN BOOM (W450/W300 VALVE)

**NOTE: HYDRAULIC FITTINGS GET 545 LOCTITE™**

**NOTE: APPLY GREASE TO O-RINGS**

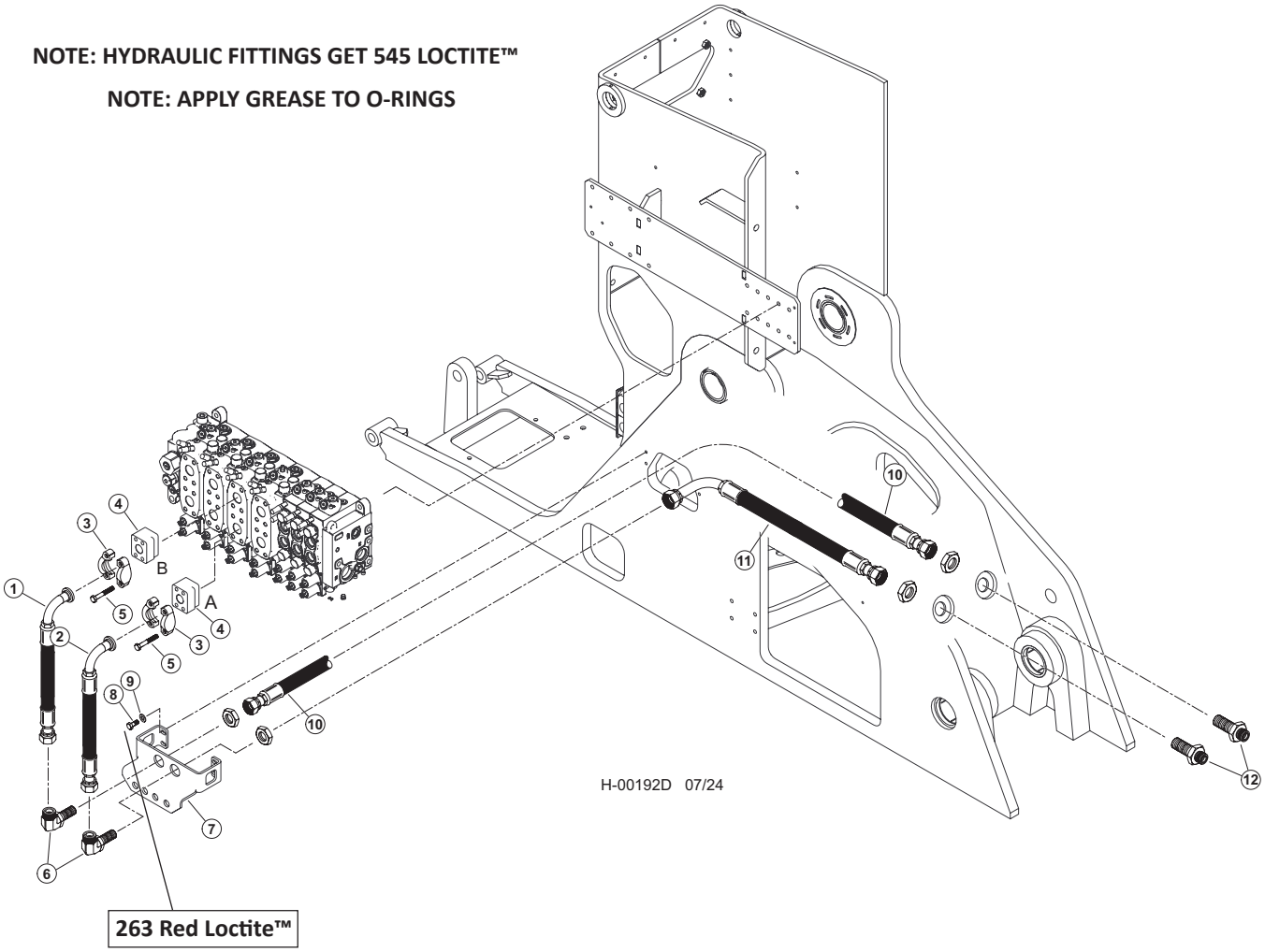


| Item | Part # | Description | Qty. |
|---|---|---|---|
| 1 | 65460 - (65812- KIT) | HOSE, HYD, 787TC36 16-16OS-20PH9-SW - **(BOOM "B")** | 1 |
| 2 | 65459 - (65812 - KIT) | HOSE, HYD, 787TC32 16-16OS-20PH9-SW - **(BOOM "A")** | 1 |
| 3 | 15111 | KIT, SPLIT FLANGE CODE 61 1 INCH | 2 |
| 4 | 65458 | ANCHOR-ASX-20GP STANDOFF | 2 |
| 5 | 55664 | BOLT, ALLEN HEAD - 10MM-1.5P X 80MM | 8 |
| 6 | 53680 | FITTING, BULKHEAD UNION ELBOW 16 WELO-WN | 4 |
| 7 | 60559 | BULHEAD, FRONT - TM | 2 |
| 8 | 10402 | BOLT - .375" X 1.25" **263 RED LOCTITE™** | 2 |
| 9 | 15528 | WASHER, SAE FLAT - .375" | 2 |
| 10 | 65803 - (65799 - KIT) | HOSE, HYD, 787TC43 16-16OS-16OS | 12 |
| | | **(MAIN BOOM CYLINDER BASE END BULKHEAD TO BULKHEAD PLATE)** | 1 |
| 11 | 65804 - (65799 - KIT) | HOSE, HYD, 787TC30 16-16OS-16O9L | |
| | | **(MAIN BOOM CYLINDER ROD END BULKHEAD TO BULKHEAD PLATE)** | 1 |
| 12 | 54316 | ELBOW, BULKHEAD UNION 45DEG #16 | 2 |

# H100-00950 - CONTROL FALL PROCESSOR PIPING - ROTATE (K220/L90 VALVE) MAIN VALVE TO BOOM

**NOTE: HYDRAULIC FITTINGS GET 545 LOCTITE™**

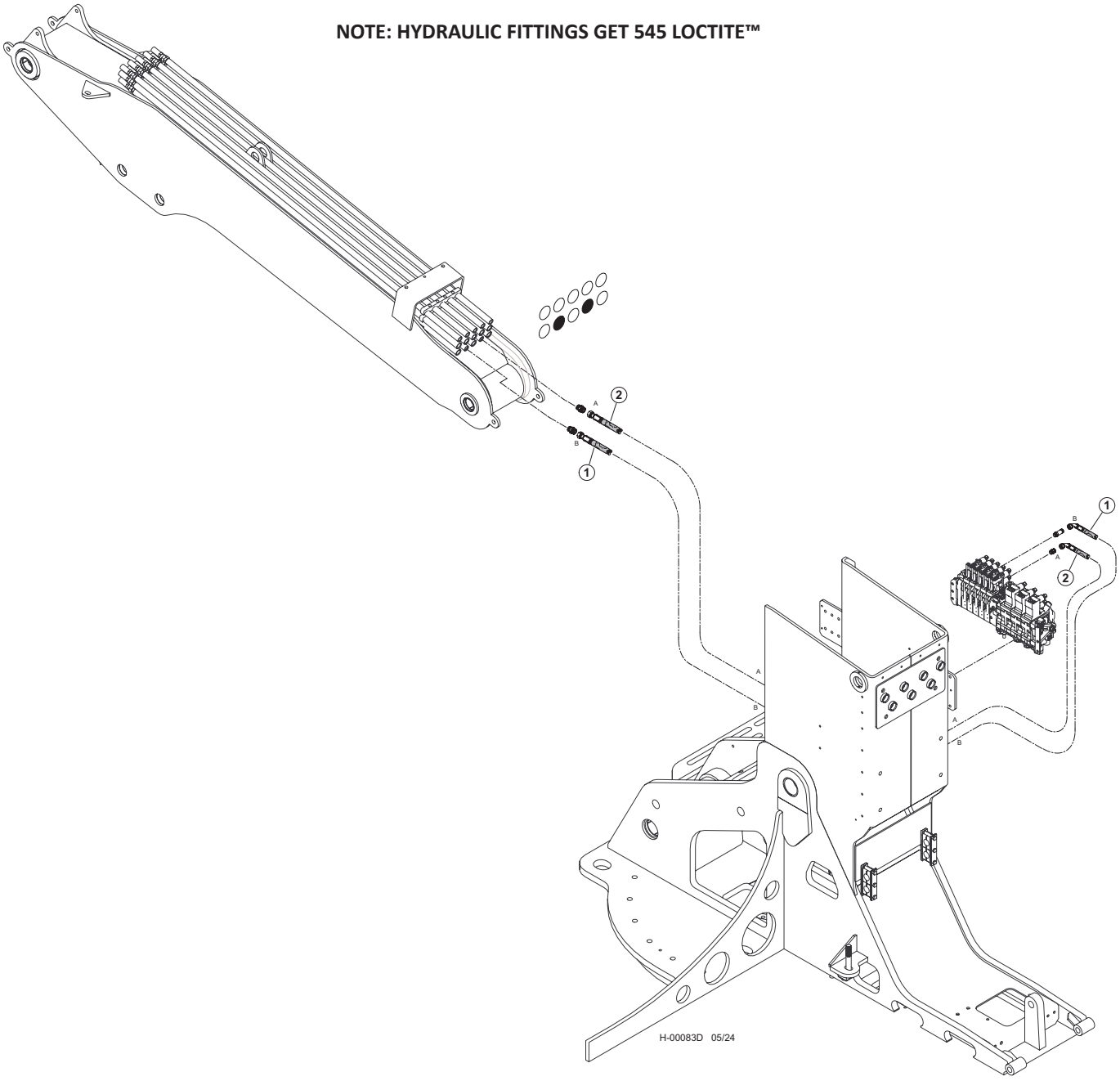


| Item | Part # | Description | Qty. |
|---|---|---|---|
| 1 | 57977 - (KIT) | HOSE ASSY - 722TC61 10-10OS-10O4-W - (ROTATE “B”) | 1 |
| 2 | 57977 - (KIT) | HOSE ASSY - 722TC60 10-10OS-10O4-W - (ROTATE “A”) | 1 |

# H200-00390 - CONTROL FALL PROCESSOR PIPING - ROTATE (W450/W300 VALVE)
# MAIN VALVE TO BOOM

**NOTE: HYDRAULIC FITTINGS GET 545 LOCTITE™**

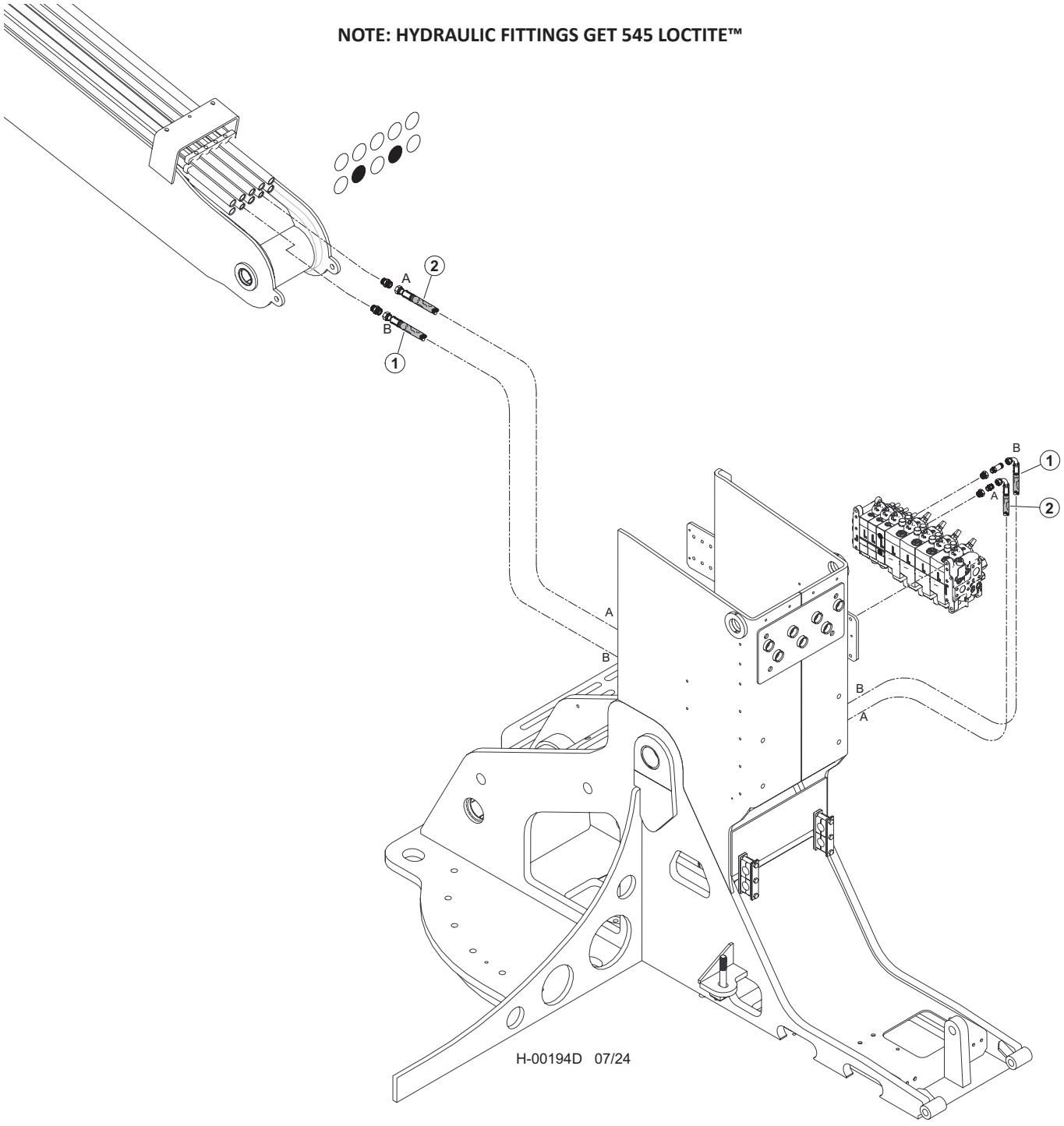


| Item | Part # | Description | Qty. |
|---|---|---|---|
| 1 | 65863 - (65856 - KIT) | HOSE, HYD, 722TC65.5 10-10OS-10O4-W - **(LATERAL TILT "B")** | 1 |
| 2 | 65863 - (65856 - KIT) | HOSE, HYD, 722TC65.5 10-10OS-10O4-W - **(LATERAL TILT "A")** | 1 |

# H100-00960 - CONTROL FALL PROCESSOR PIPING - CAB LEVEL (K220/L90 VALVE)
# MAIN VALVE TO BOOM

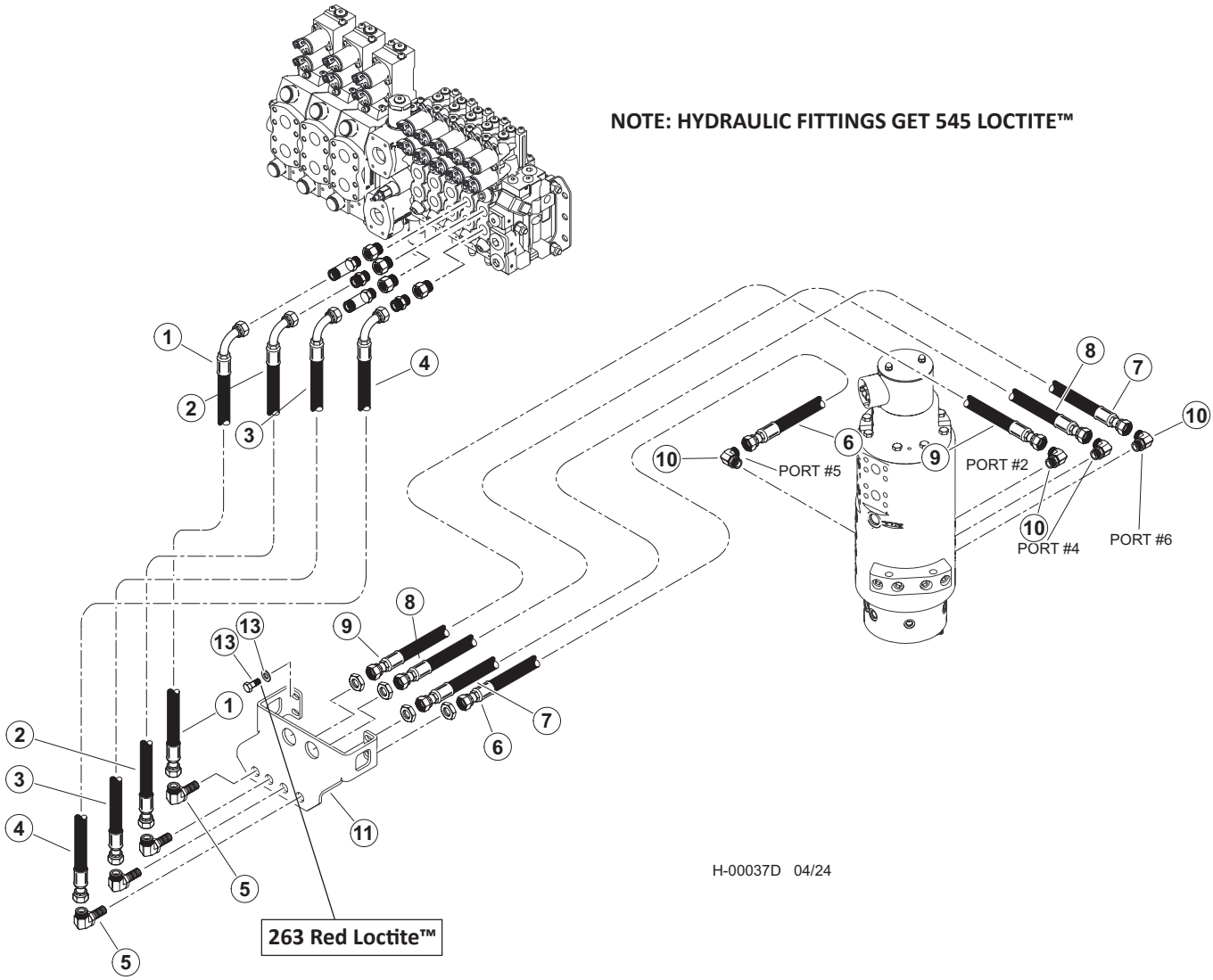


| Item | Part # | Description | Qty. |
|---|---|---|---|
| 1 | 57945 - (KIT) | HOSE ASSY - 787TC42 08-08OS-0809 - (VALVE PORT “B” TO BULKHEAD) | 1 |
| 2 | 57945 - (KIT) | HOSE ASSY - 787TC42 08-08OS-0809 - (VALVE PORT “B” TO BULKHEAD) | 1 |
| 3 | 57945 - (KIT) | HOSE ASSY - 787TC39 08-08OS-0809 - (VALVE PORT “A” TO BULKHEAD) | 1 |
| 4 | 57945 - (KIT) | HOSE ASSY - 787TC39 08-08OS-0809 - (VALVE PORT “A” TO BULKHEAD) | 1 |
| | 57947 | KIT, FITTING TRACK LEVEL-D SERIES | 1 |
| 5 | 24187 | ELBOW, 90 BULKHEAD - 855BH-TT-08 | 4 |
| 6 | 57945 - (KIT) | HOSE ASSY - 787TC30 08-08OS-080S - (BULKHEAD TO PORT #5 ON ROT MAN) | 1 |
| 7 | 57945 - (KIT) | HOSE ASSY - 787TC40 08-08OS-080S - (BULKHEAD TO PORT #6 ON ROT MAN) | 1 |
| 8 | 57945 - (KIT) | HOSE ASSY - 787TC41.5 08-08OS-080S - (BULKHEAD TO PORT #4 ON ROT MAN) | 1 |
| 9 | 57945 - (KIT) | HOSE ASSY - 787TC44 08-08OS-080S - (BULKHEAD TO PORT #2 ON ROT MAN) | 1 |
| 10 | 16360 | ELBOW, 90 - FF1868T-0808S | 4 |
| 11 | 60559 | BULHEAD, FRONT - TM | 1 |
| 12 | 15542 | BOLT - .375” X .75” | 2 |
| 13 | 15528 | WASHER, SAE FLAT - .375” OR 3/8” **263 RED LOCTITE™** | 2 |

# H200-00400 - CONTROL FALL PROCESSOR PIPING - CAB LEVEL (W450/W300 VALVE) MAIN VALVE TO BOOM

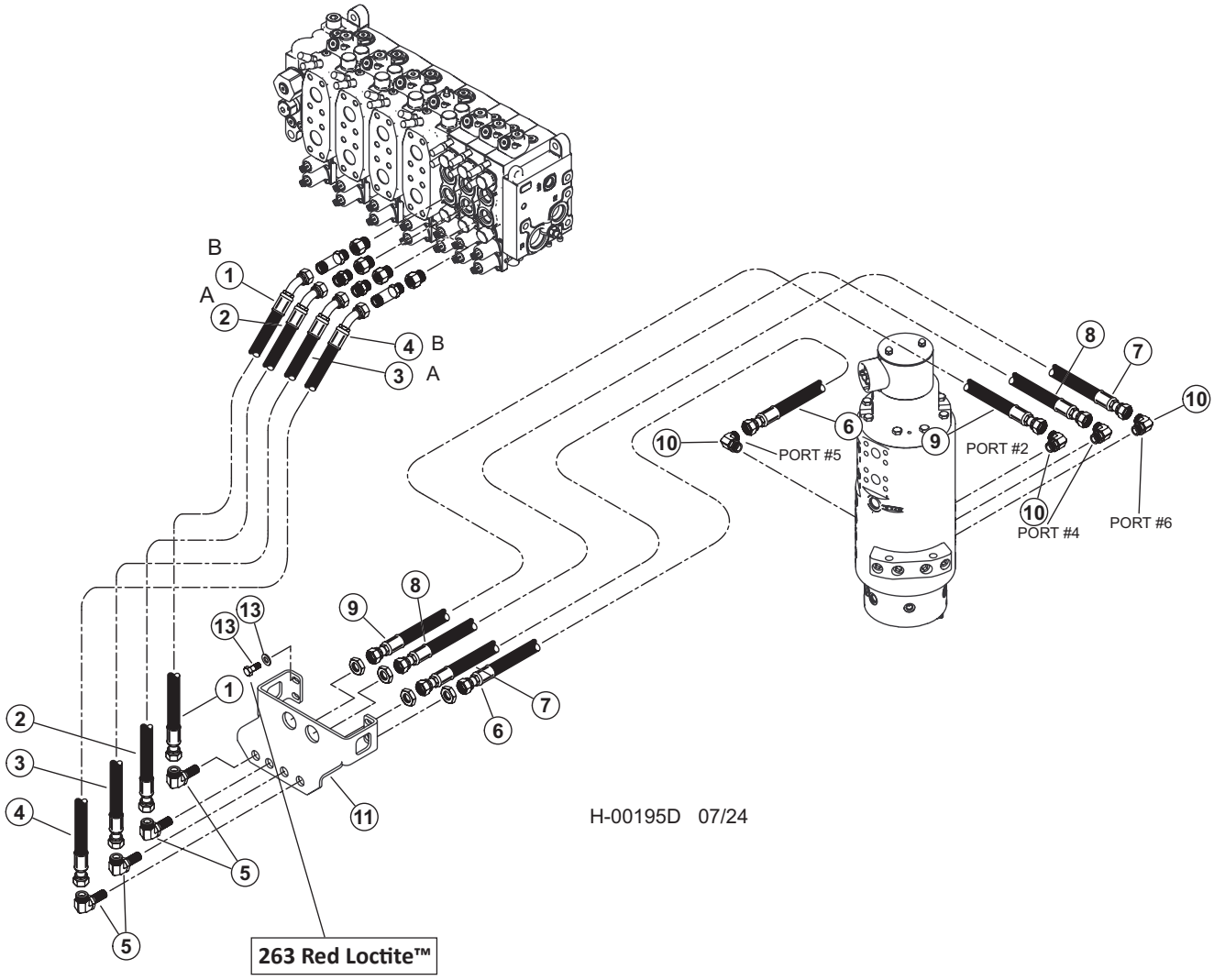


| Item | Part # | Description | Qty. |
|---|---|---|---|
| 1 | 65621 - (65619 - KIT) | HOSE, HYD, 787TC45 08-08OS-08O9 - **(VALVE PORT "B" TO BULKHEAD)** | 1 |
| 2 | 65621 - (65619 - KIT) | HOSE, HYD, 787TC45 08-08OS-08O9 - **(VALVE PORT "B" TO BULKHEAD)** | 1 |
| 3 | 65620 - (65619 - KIT) | HOSE, HYD, 787TC40.5 08-08OS-08O9 - **(VALVE PORT "A" TO BULKHEAD)** | 1 |
| 4 | 65620 - (65619 - KIT) | HOSE, HYD, 787TC40.5 08-08OS-08O9 - **(VALVE PORT "A" TO BULKHEAD)** | 1 |
| | 57947 | KIT, FITTING TRACK LEVEL-D SERIES | 1 |
| 5 | 24187 | ELBOW, 90 BULKHEAD - 855BH-TT-08 | 4 |
| 6 | 65892 - (65891 - KIT) | HOSE ASSY - 787TC30 08-08OS-080S - **(BULKHEAD TO PORT #5 ON ROT MAN)** | 1 |
| 7 | 65893 - (65891 - KIT) | HOSE ASSY - 787TC40 08-08OS-080S - **(BULKHEAD TO PORT #6 ON ROT MAN)** | 1 |
| 8 | 65894 - (65891 - KIT) | HOSE ASSY - 787TC41.5 08-08OS-080S - **(BULKHEAD TO PORT #4 ON ROT MAN)** | 1 |
| 9 | 65895 - (65891 - KIT) | HOSE ASSY - 787TC44 08-08OS-080S - **(BULKHEAD TO PORT #2 ON ROT MAN)** | 1 |
| 10 | 16360 | ELBOW, 90 - FF1868T-0808S | 4 |
| 11 | 60559 | BULHEAD, FRONT - TM | 1 |
| 12 | 15542 | BOLT - .375" X .75" | 2 |
| 13 | 15528 | WASHER, SAE FLAT - .375" OR 3/8" **263 RED LOCTITE™** | 2 |

# H100-00970 - CONTROL FALL PROCESSOR PIPING - MAIN BOOM CYLINDER (BULKHEAD FITTING TO CYLINDER)

**NOTE: HYDRAULIC FITTINGS GET 545 LOCTITE™**

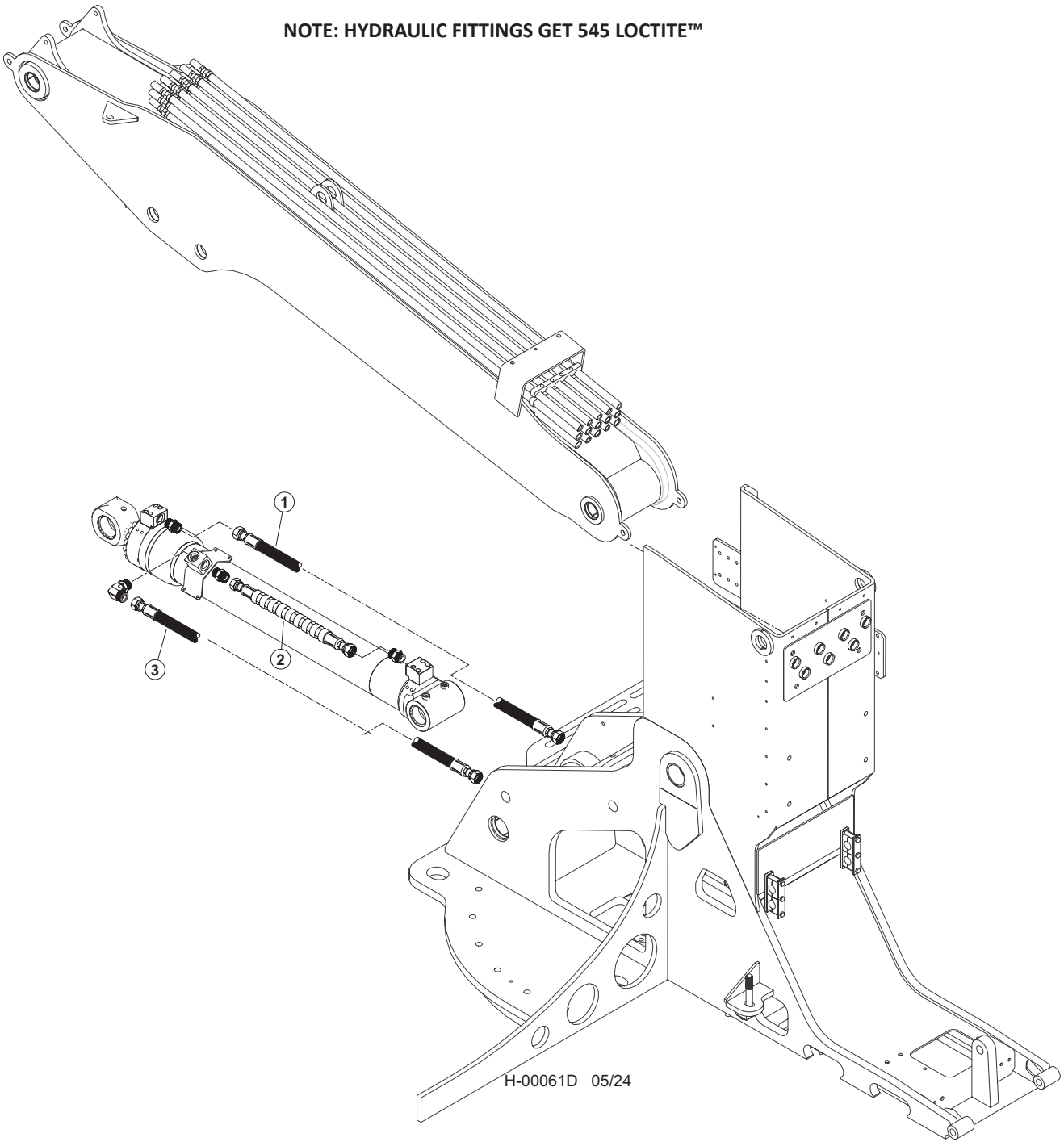


| Item | Part # | Description | Qty. |
|---|---|---|---|
| 1 | 65802 - (65799 -KIT) | HOSE, HYD, 787TC70 16-16OS-16OS - **(ROD END OF BOOM CYLINDER)** | 1 |
| 2 | 65800 - (65799 - KIT) | HOSE, HYD, 787TC45.5 16-16OS-16OS-SW - **(BASE END OF BOOM CYLINDER TO BLOCK)** | 1 |
| 3 | 65801 - (65799 - KIT) | HOSE, HYD, 787TC60 16-16OS-16OS - **(BASE END OF BOOM CYLINDER)** | 1 |

# H100-00980 - CONTROL FALL PROCESSOR PIPING - LIGHT WIRE (MAIN BOOM TO STICK BOOM)

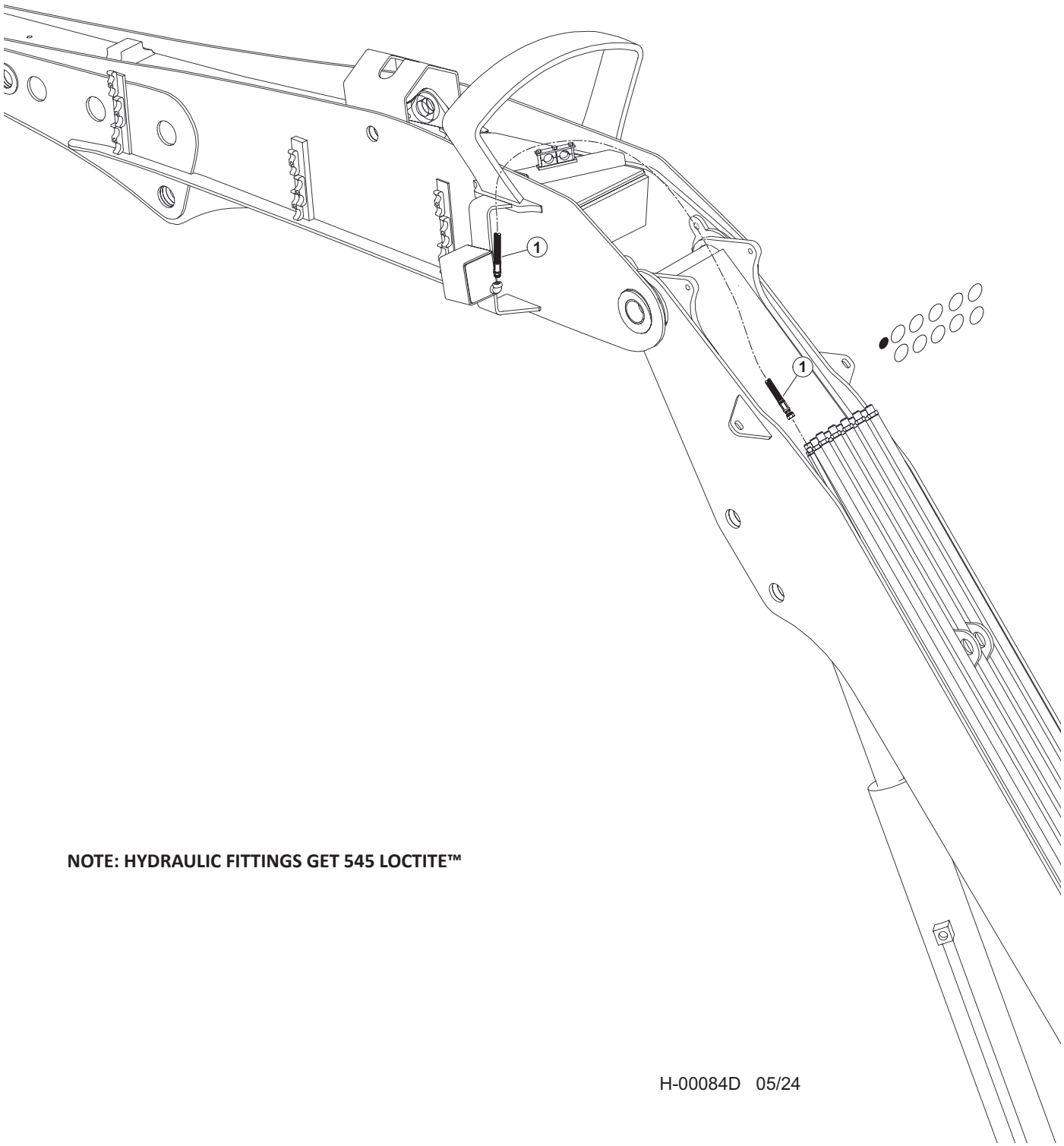


**NOTE: HYDRAULIC FITTINGS GET 545 LOCTITE™**

H-00084D 05/24

| Item | Part # | Description | Qty. |
|---|---|---|---|
| 1 | 65838 - (663770 -KIT) | HOSE ASSY - 387TC76 06-06OS-08PS **- (LIGHT WIRE)** | 1 |

# H100-00990 - CONTROL FALL PROCESSOR PIPING - TOOL TILT (MAIN BOOM TO CYLINDER)

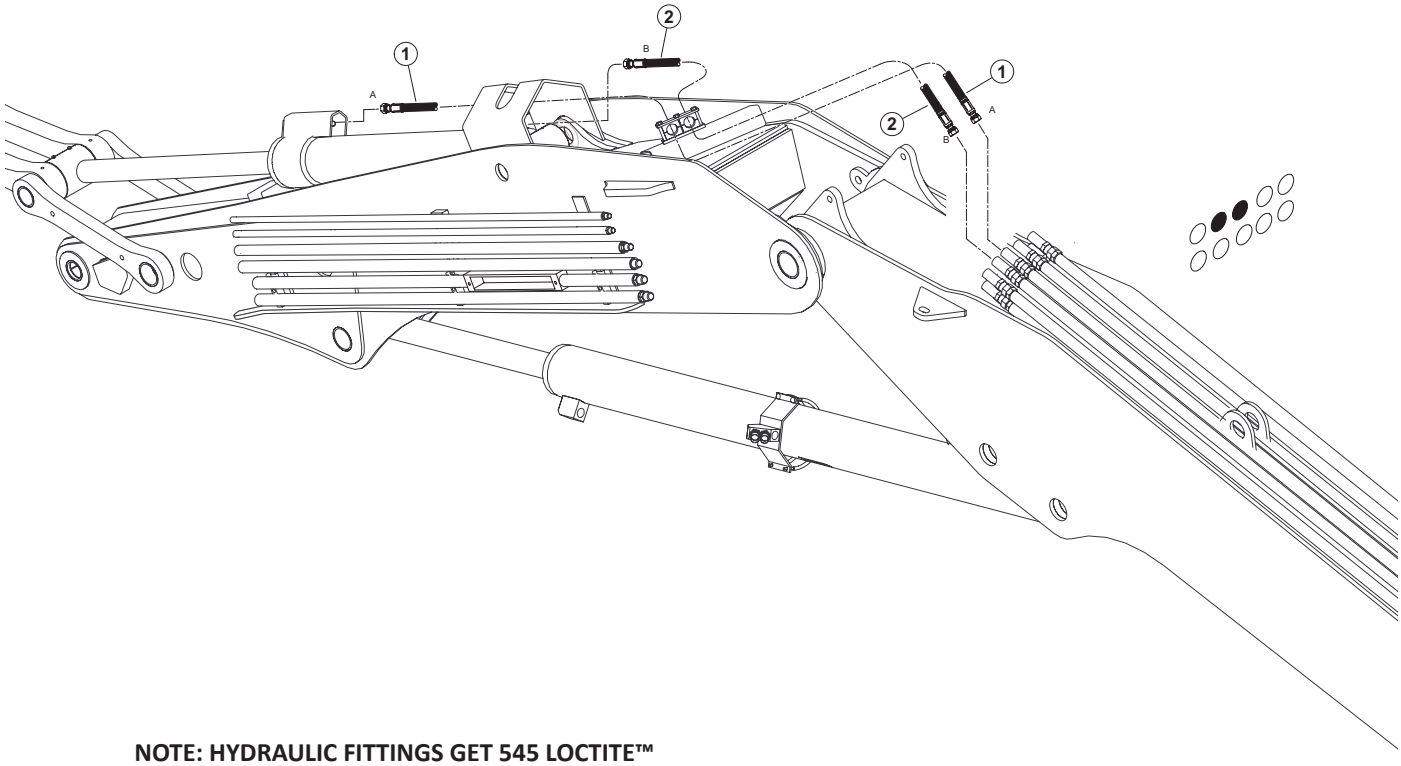


**NOTE: HYDRAULIC FITTINGS GET 545 LOCTITE™**

H-00085D 05/24

| Item | Part # | Description | Qty. |
|---|---|---|---|
| 1 | 65846 - (663770 - KIT) | HOSE, HYD, 787TC160 16-16OS-16OS **- (TOOL CYLINDER "A")** | 1 |
| 2 | 65847 - (663770 - KIT) | HOSE, HYD, 787TC108 16-16OS-16OS **- (TOOL CYLINDER "B")** | 1 |

# H100-01000 - CONTROL FALL PROCESSOR PIPING - STICK BOOM (MAIN BOOM TO STICK CYLINDER)

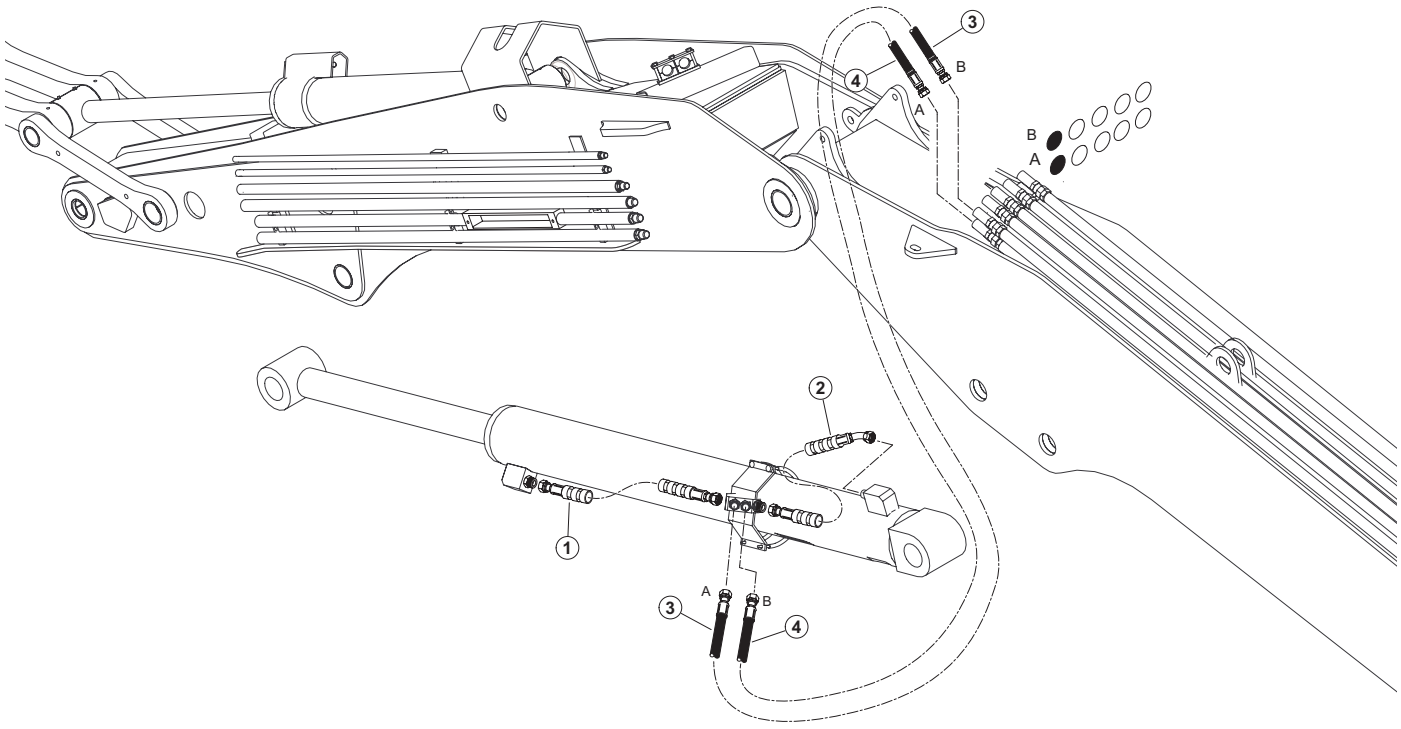


**NOTE: HYDRAULIC FITTINGS GET 545 LOCTITE™**

H-00086D 05/24

| Item | Part # | Description | Qty. |
|---|---|---|---|
| 1 | 65855 | HOSE, HYD, 787TC38 16-16OS-16OS-SW - **(STICK CYLINDER ROD - "A")** | 1 |
| 2 | 65853 | HOSE, HYD, 787TC17 16-16OS-16O4-SW - **(STICK CYLINDER BASE - "B")** | 1 |
| 3 | 65848 - (663770 - KIT) | HOSE, HYD, 787TC79 16-16OS-16OS - **(STICK CYLINDER ROD - "A")** | 1 |
| 4 | 65849 - (663770 - KIT) | HOSE, HYD, 787TC81 16-16OS-16OS - **(STICK CYLINDER BASE - "B")** | 1 |

# H100-01010 - CONTROL FALL PROCESSOR PIPING - ROTATE (MAIN BOOM TO STICK BOOM)

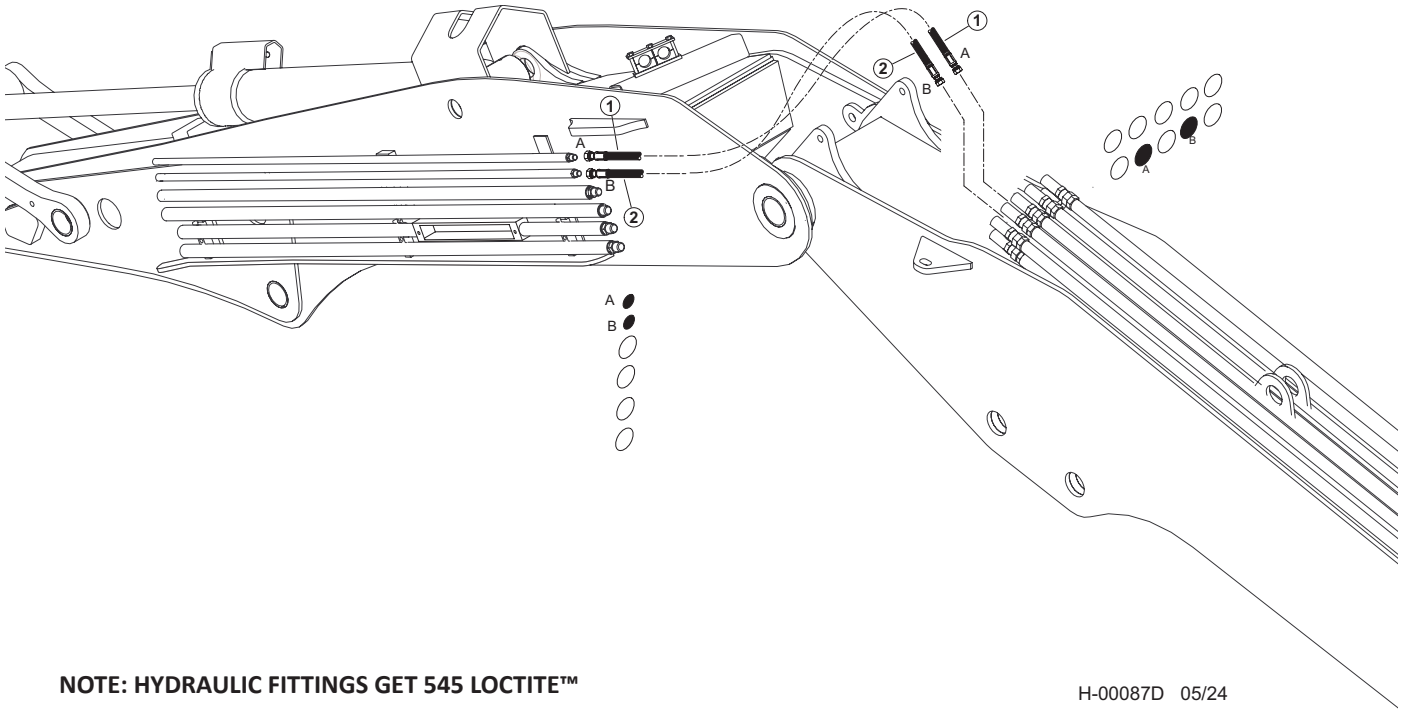


**NOTE: HYDRAULIC FITTINGS GET 545 LOCTITE™**

H-00087D 05/24

| Item | Part # | Description | Qty. |
|---|---|---|---|
| 1 | 65846 - (663770 - KIT) | HOSE, HYD, 787TC160 16-16OS-16OS - **(ROTATE "A")** | 1 |
| 2 | 65847 - (663770 - KIT) | HOSE, HYD, 787TC108 16-16OS-16OS - **(ROTATE "B")** | 1 |

# H100-01020 - CONTROL FALL PROCESSOR PIPING - PRESSURE & RETURN (MAIN BOOM TO STICK BOOM)

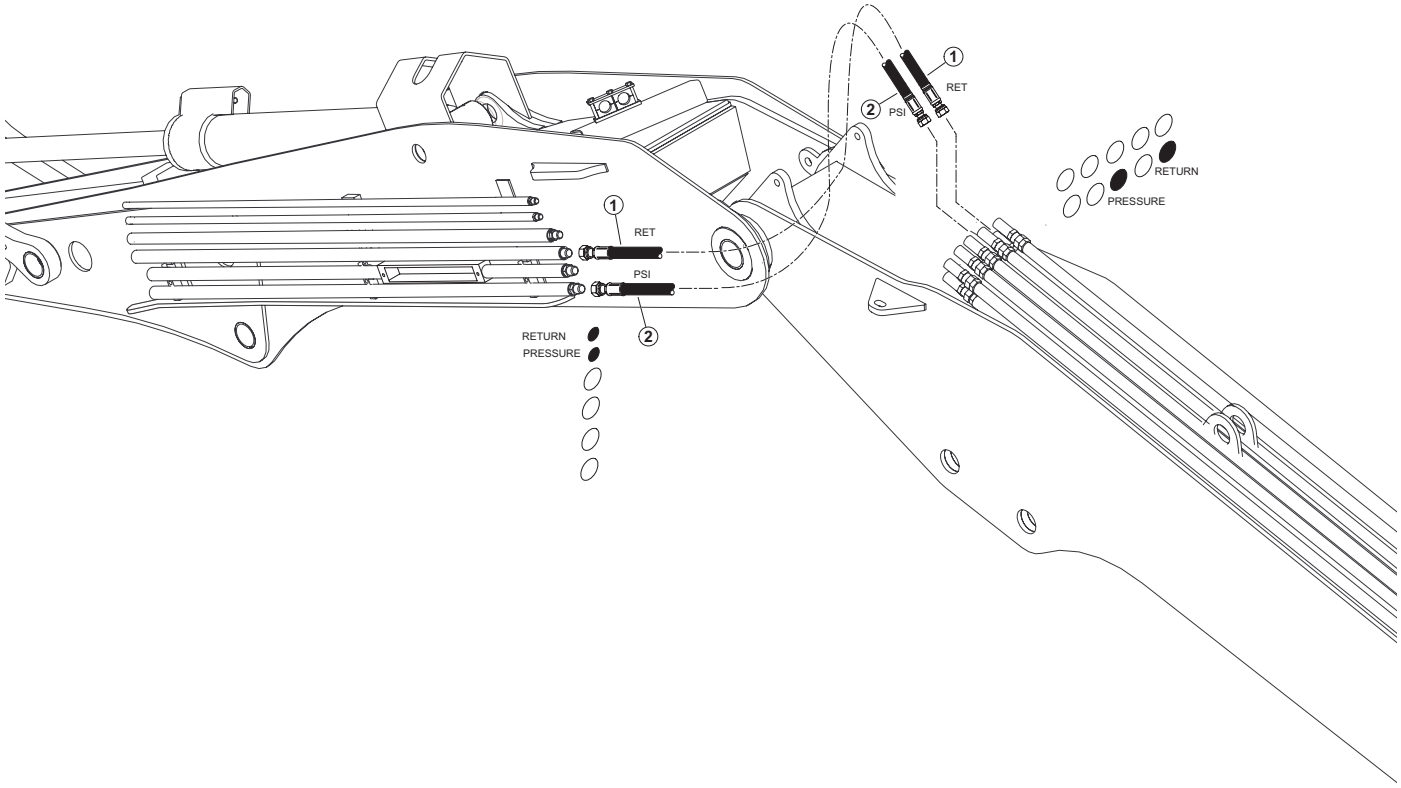


**NOTE: HYDRAULIC FITTINGS GET 545 LOCTITE™**

H-00088D 05/24

| Item | Part # | Description | Qty. |
|---|---|---|---|
| 1 | 66444 - (663770 - KIT) | HOSE, HYD, 722TC75 20-20OS-20OS - **(RETURN**) | 1 |
| 2 | 66443 - (663770 - KIT) | HOSE, HYD, 787TC73 20-20OS-20OS - **(PRESSURE)** | 1 |

# H100-01030 - CONTROL FALL PROCESSOR PIPING - CASE DRAIN & ATTACHMENT ELEC. (MAIN BOOM TO STICK BOOM)

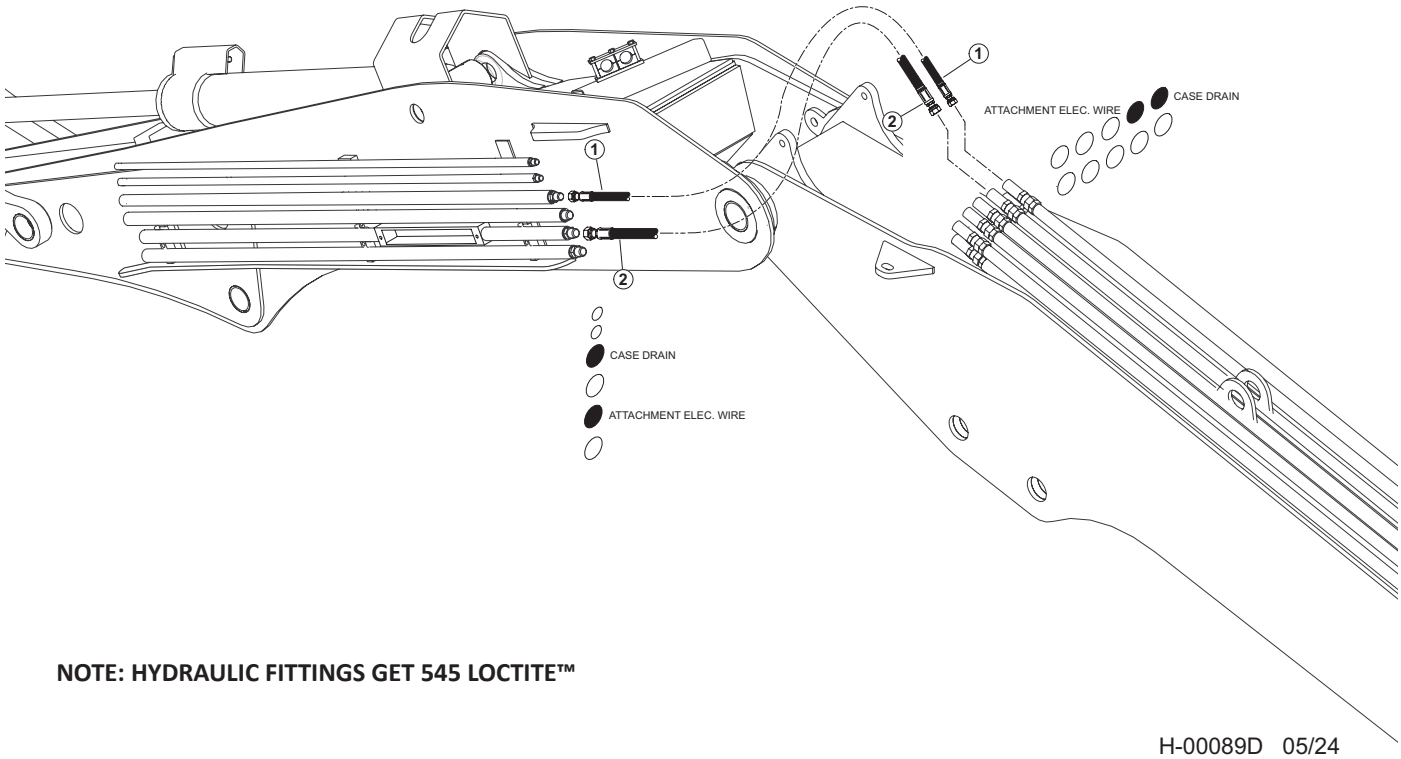


**NOTE: HYDRAULIC FITTINGS GET 545 LOCTITE™**

H-00089D 05/24

| Item | Part # | Description | Qty. |
|---|---|---|---|
| 1 | 65845 - (663770 - KIT) | HOSE, HYD, 722TC76 12-12OS-12OS - **(CASE DRAIN)** | 1 |
| 2 | 66440 - (663770 - KIT) | HOSE, HYD, 387TC74 16-16OS-16OS - **(ATTACHMENT WIRE)** | 1 |

# H100-01040 - CONTROL FALL PROCESSOR PIPING - GREASE HOSES (MAIN BOOM TO STICK BOOM)

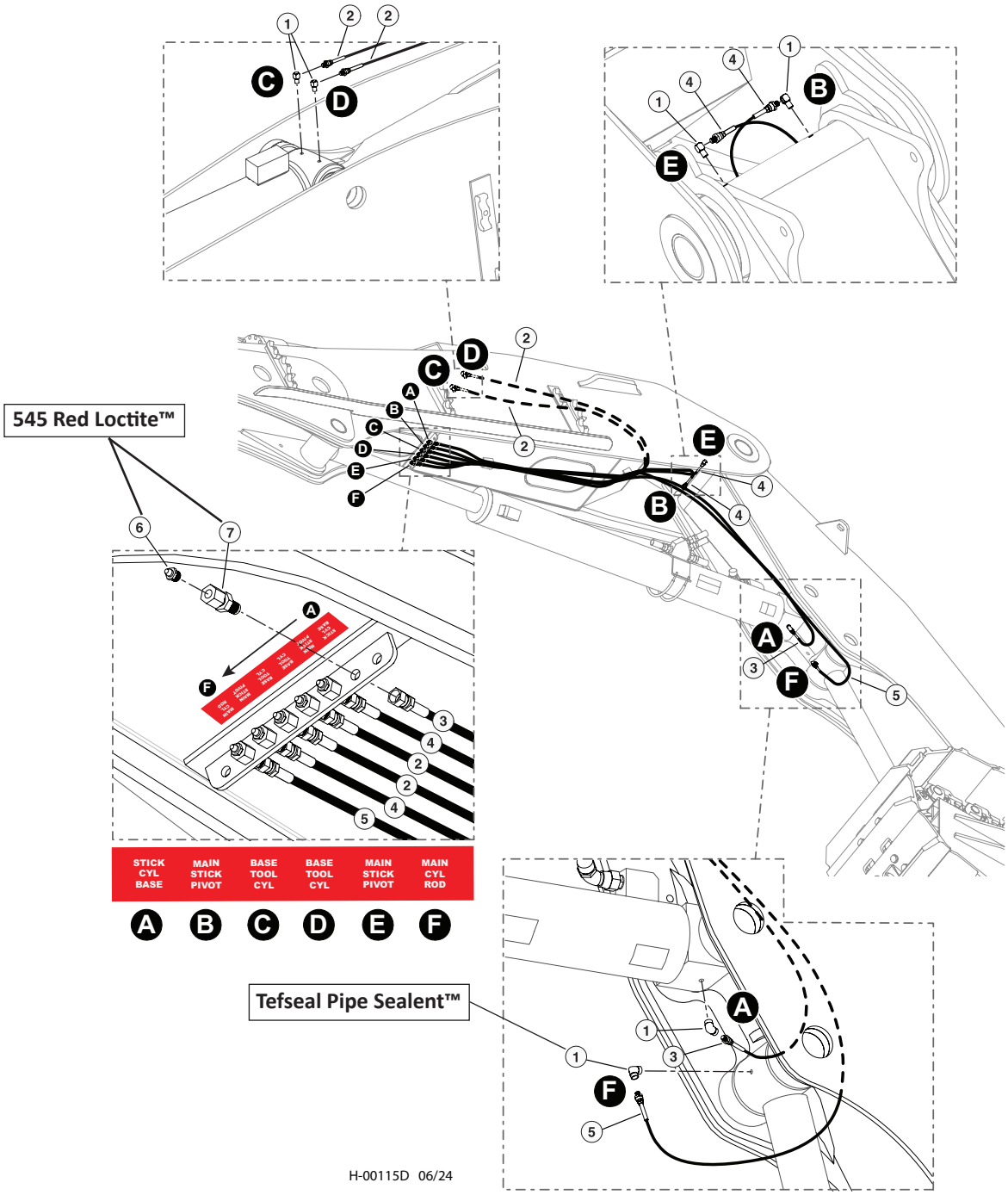


| Item | Part # | Description | Qty. |
|---|---|---|---|
| 1 | 22281 | FITTING, 90° - 5546132 **TEFSEAL PIPE SEALENT™** | 4 |
| 2 | 55605 - (KIT) | HOSE ASSY - 2133-02-02PS-04JS (TOOL CYL BASE) | 2 |
| 3 | 55605 - (KIT) | HOSE ASSY - 2138-02-02PS-04JS (STICK CYL BASE) | 1 |
| 4 | 55605 - (KIT) | HOSE ASSY - 2188-02-02PS-04JS (MAIN/STICK PIVOT) | 2 |
| 5 | 55605 - (KIT) | HOSE ASSY - 2147-02-02PS-04JS (MAIN CYL ROD) | 1 |
| 6 | 15658 | CONNECTOR, STRAIGHT BULKHEAD - 2239-2-4S **545 RED LOCTITE™** | 6 |
| 7 | 10704 | FITTING, STRAIGHT GREASE - 1/8” PIPE THREAD **545 RED LOCTITE™** | 6 |

# H100-01050 - MAIN BOOM PIPING - FIXED STICK BOOM DANGLE HEAD PROCESSOR

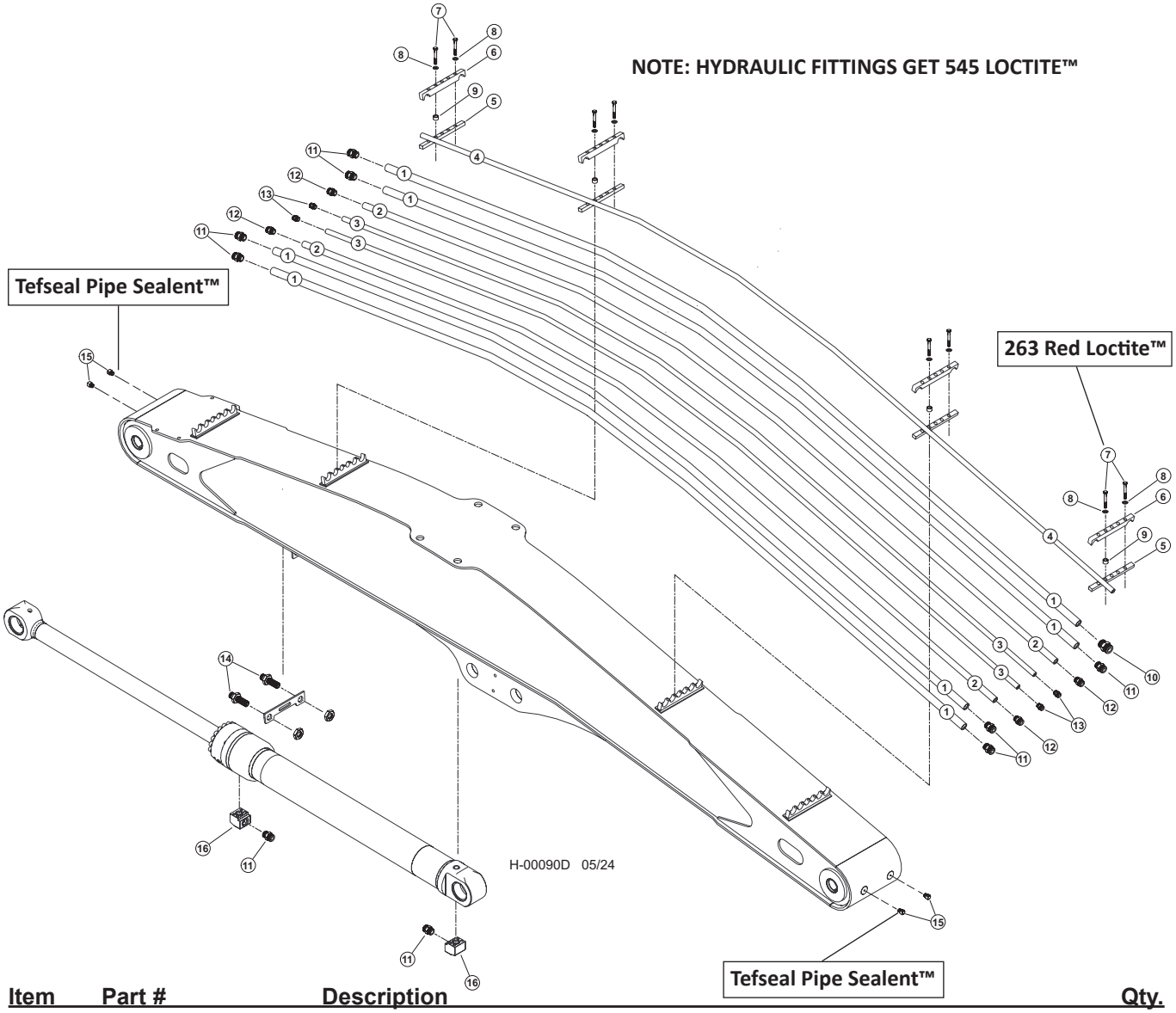


| Item | Part # | Description | Qty. |
|---|---|---|---|
| 1 | 60261 | TUBELINE - 1” HARVESTER BOOM | 4 |
| 2 | 60262 | TUBELINE - .75” HARVESTER BOOM | 2 |
| 3 | 60263 | TUBELINE - .5” HARVESTER BOOM | 2 |
| 4 | 60736 | TUBE, BOOM LIGHT - HARVESTER | 1 |
| 5 | 60254 | PLATE, TUBELINE BASE | 4 |
| 6 | 60252 | CLAMP, TUBE BASE - DRILLED | 4 |
| 7 | 10723 | BOLT - .625” X 4.5” **263 RED LOCTITE™** | 16 |
| 8 | 23210 | WASHER, SAE FLAT - .625” (EXTRA THICK) | 16 |
| 9 | 19219 | SPACER | 12 |
| | **58973 (FITTING KIT)** | HARVESTER BOOM ADAPTER KIT | |
| 10 | 17063 | CONNECTOR, STR - FF1852T-2016S | 1 |
| 11 | 15225 | CONNECTOR, STR - FF1852T-1616S | 9 |
| 12 | 15152 | CONNECTOR, STR - FF1852T-1212S | 4 |
| 13 | 15117 | CONNECTOR, STR - FF1852T-0808S | 4 |
| 14 | 20033 | CONNECTOR, STR BULKHEAD - 832-TT-16 | 2 |
| 15 | 22281 | ELBOW, 1/8-27 NPTF(M), 1/8-17 NPTF(F),90 **TEFSEAL PIPE SEALENT™** | 4 |
| 16 | 57601 | FLANGE, BLOCK ELBOW W184-16-16U CODE 62 | 2 |
| | **NOT SHOWN** | | |
| | 53218 | WIRE - PROCESSING HEAD CABLE (7 WIRES) | 40’ |
| | 58380 | CABLE | 40’ |

# H100-01060 - STICK BOOM PIPING - FIXED STICK BOOM DANGLE HEAD PROCESSOR

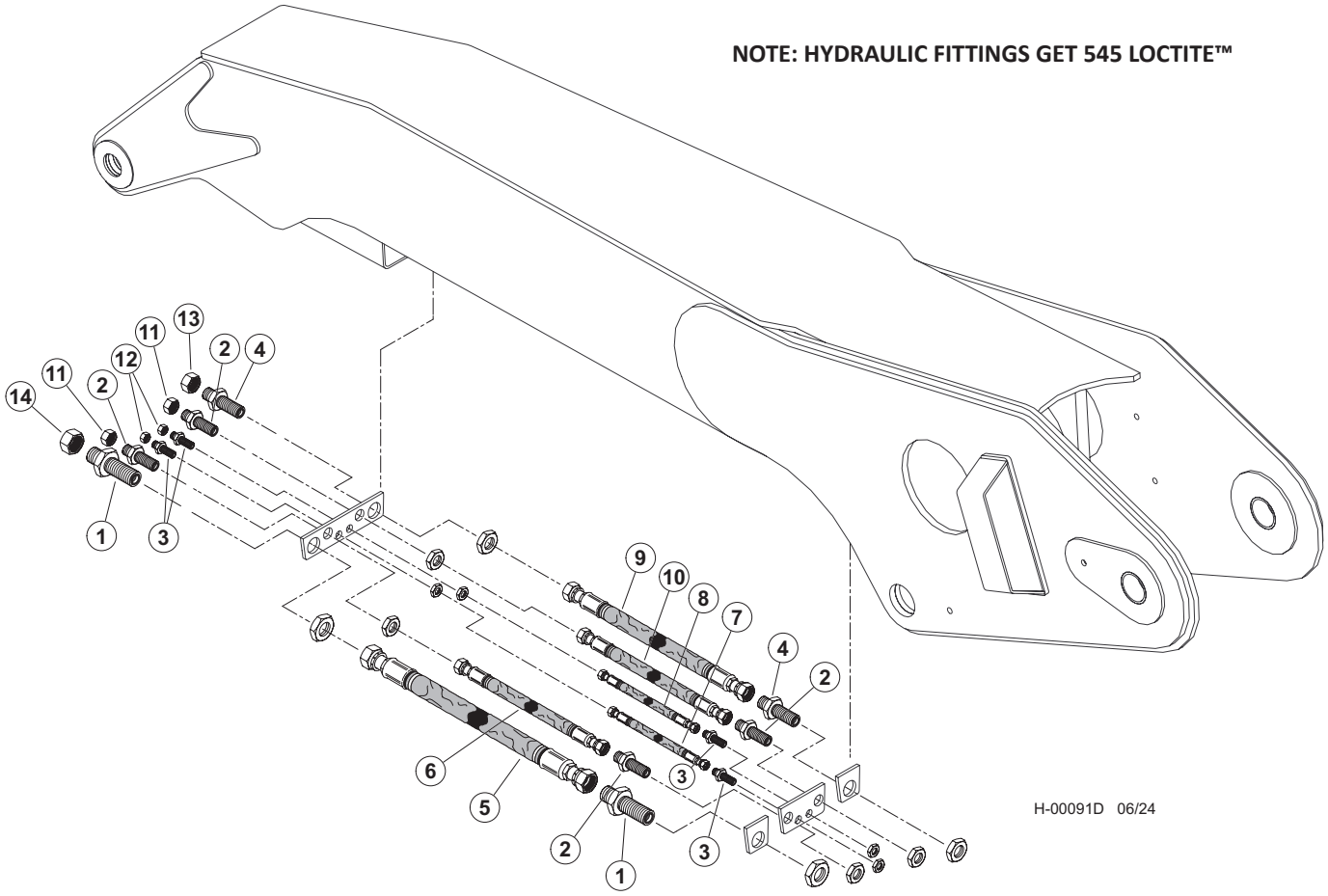


| Item | Part # | Description | Qty. |
|---|---|---|---|
| 1 | 54743 | CONNECTOR, STR BULKHEAD - 20 WLO-WLNL-S | 2 |
| 2 | 19754 | CONNECTOR, STR BULKHEAD - 12 WLO-WLNL-S | 4 |
| 3 | 20196 | CONNECTOR, STR BULKHEAD - FF1994T-0808S | 4 |
| 4 | 20033 | CONNECTOR, STR BULKHEAD - 832-TT-16 | 2 |
| 5 | 664900 - (664880 - KIT) | HOSE, HYD, 187TC51 20-20OS-20OS-SW - **(RETURN)** | 1 |
| 6 | 664940 - (664880 - KIT) | HOSE, HYD, 387TC51 16-16OS-16OS-SW - **(PROCESSOR WIRE)** | 1 |
| 7 | 664970 - (664880 - KIT) | HOSE, HYD, 722TC51 08-08OS-08OS-W - **(ROTATE "A")** | 1 |
| 8 | 664970 - (664880 - KIT) | HOSE, HYD, 722TC51 08-08OS-08OS-W - **(ROTATE "B")** | 1 |
| 9 | 664990 - (664880 - KIT) | HOSE, HYD, 787TC51 16-16OS-16OS-W - **(PRESSURE)** | 1 |
| 10 | 664930 - (664880 - KIT) | HOSE, HYD, 387TC51 12-12OS-12OS-SW - **(CASE DRAIN)** | 1 |
| 11 | 15437 | CAP - FF9863-12S | 2 |
| 12 | 15434 | CAP - FF9863-08S | 2 |
| 13 | 15436 | CAP - FF9863-16S | 1 |
| 14 | 17075 | CAP - FF9863-20S | 1 |

# H100-01070 - FIXED STICK BOOM DANGLE PROCESSOR PIPING - PRESSURE, CASE DRAIN & LOAD SENSE (K220/L90 VALVE) - AUXILIARY PUMP TO BOOM)

**NOTE: HYDRAULIC FITTINGS GET 545 LOCTITE™**

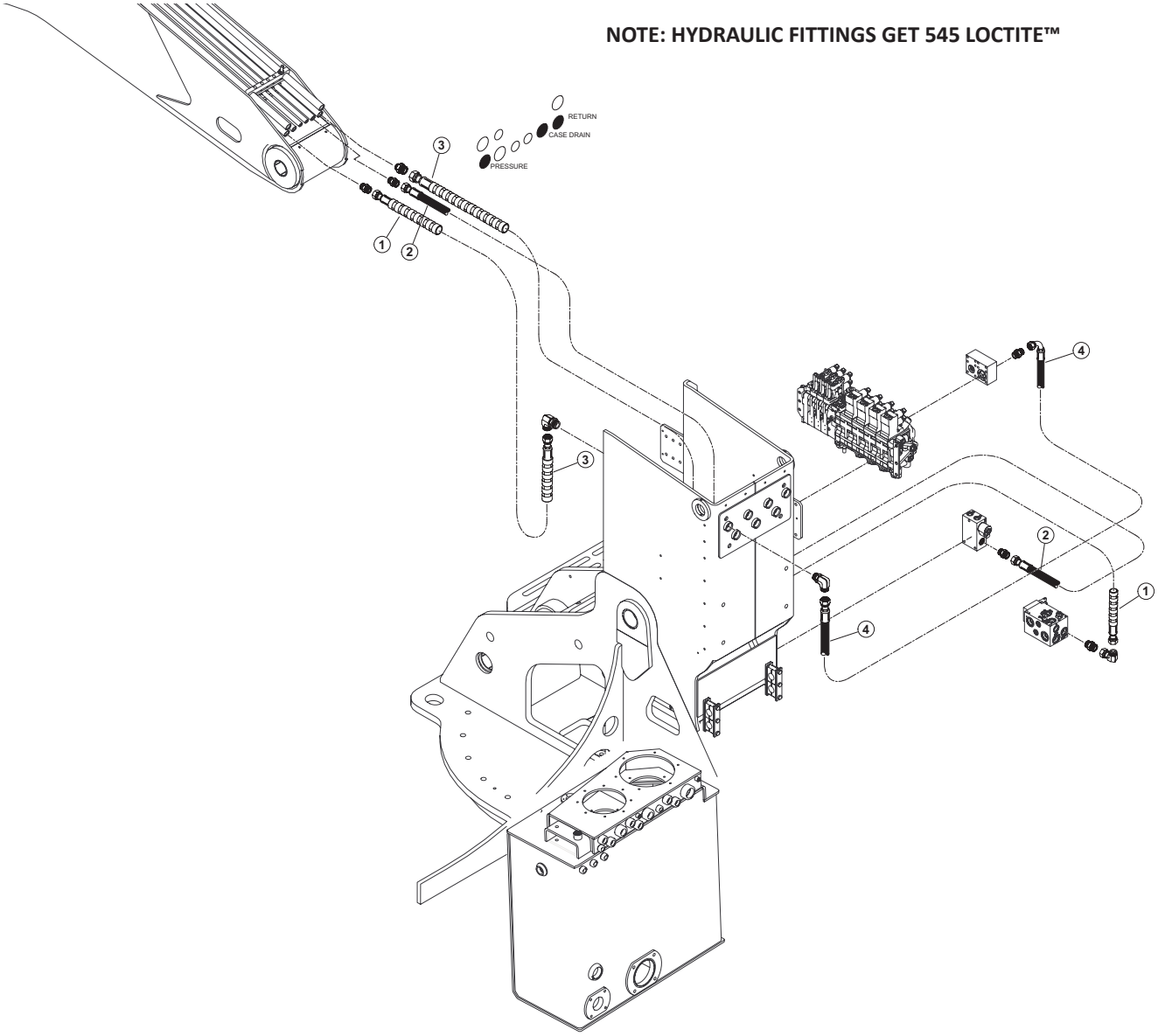


H-00092D 06/24

| Item | Part # | Description | Qty. |
|---|---|---|---|
| 1 | (SEE DESCRIPTION) | HOSE ASSY - 187TC58 20-20JS-20OS-SW - (ATTACHMENT RETURN) | 1 |
| 2 | (SEE DESCRIPTION) | HOSE ASSY - 187TC56 12-12OS-12OS-W - (ATTACHMENT CASE DRAIN) | 1 |
| 3 | (SEE DESCRIPTION) | HOSE ASSY - 787TC42 16-16OS-16OS-SW - (ATTACHMENT PRESSURE) | 1 |
| 4 | (SEE DESCRIPTION) | HOSE ASSY - 787TC32 16-16OS-16O9 - (ATTACHMENT PRESSURE) | 1 |
| 5 | (SEE DESCRIPTION) | HOSE ASSY - 787TC39 04-04OS-04OS-W - (AUXILARY PUMP LS DRAIN) | 1 |
| 6 | (SEE DESCRIPTION) | HOSE ASSY - 787TC32 16-16OS-16O9 - (ATTACHMENT PRESSURE) | 1 |
| 7 | (SEE DESCRIPTION) | HOSE ASSY - 787TC35 04-04OS-04O9-W - (AUXILARY PUMP LS DRAIN) | 1 |
| 8 | (SEE DESCRIPTION) | HOSE ASSY - 187TC27.5 12-12OS-12O9 - (AUXILARY PUMP CASE DRAIN) | 1 |
| 9 | (SEE DESCRIPTION) | HOSE ASSY - 787TC11 04-04OS-04O9 - (AUXILARY PUMP LOAD SENSE) | 1 |
| 10 | (SEE DESCRIPTION) | HOSE ASSY - 7219-200018.5 32-00-00 - (AUXILARY PUMP SUCTION INLET) | 1 |

# H200-00410 - STICK BOOM DANGLE PROCESSOR PIPING - SAW PRESSURE, RETURN, CASE DRAIN & LOAD SENSE (W450/W300 VALVE) - VALVE TO BOOM

**NOTE: HYDRAULIC FITTINGS GET 545 LOCTITE™**

**NOTE: APPLY GREASE TO O-RINGS**

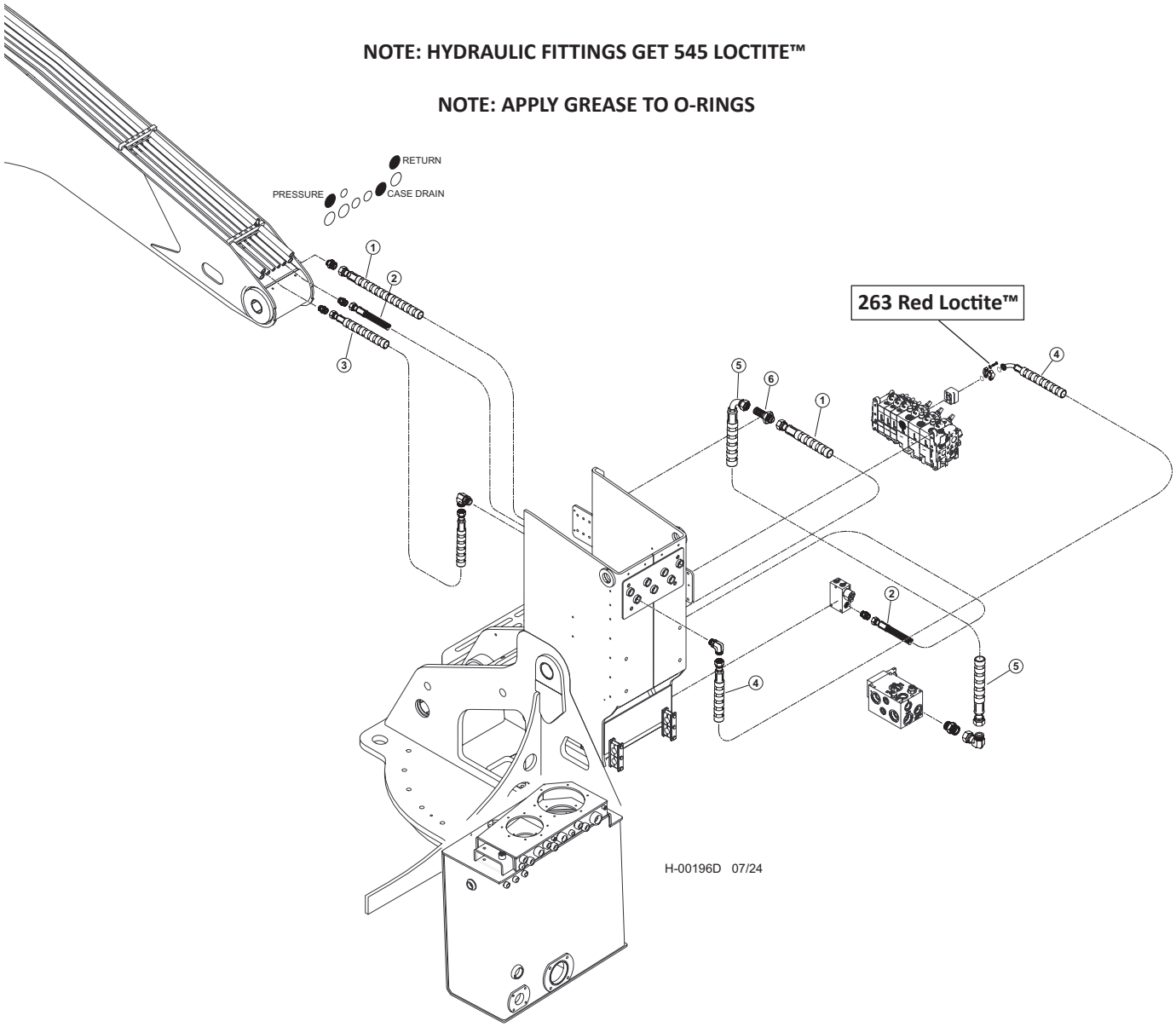


| Item | Part # | Description | Qty. |
|---|---|---|---|
| 1 | 66477 - (65864 - KIT) | HOSE, HYD, 187TC53 20-20JS-20OS-SW - **(ATTACHMENT RETURN)** | 1 |
| 2 | 66476 - (65864 - KIT) | HOSE, HYD, 187TC51 12-12OS-12OS-SW - **(ATTACHMENT CASE DRAIN)** | 1 |
| 3 | 65884 - (65864 - KIT) | HOSE, HYD, 787TC39 16-16OS-16OS-SW - **(VALVE PRESSURE)** | 1 |
| 4 | 65640 - (65864 - KIT) | HOSE, HYD, 787TC46 16-16OS-20PH4-SW - **(VALVE PRESSURE)** | 1 |
| 5 | 65677 - (65864 - KIT) | HOSE, HYD, 187TC42 20-20JS-20J9-SW - **(RETURN)** | 1 |
| 6 | 57491 - (57950- KIT) | FITTING, 20 WTX-WLN-S | 1 |

# H100-01080 - FIXED STICK BOOM DANGLE PROCESSOR PIPING - STICK BOOM CYLINDER (K220/L90 VALVE) - MAIN VALVE TO BOOM

**NOTE: HYDRAULIC FITTINGS GET 545 LOCTITE™**

**NOTE: APPLY GREASE TO O-RINGS**

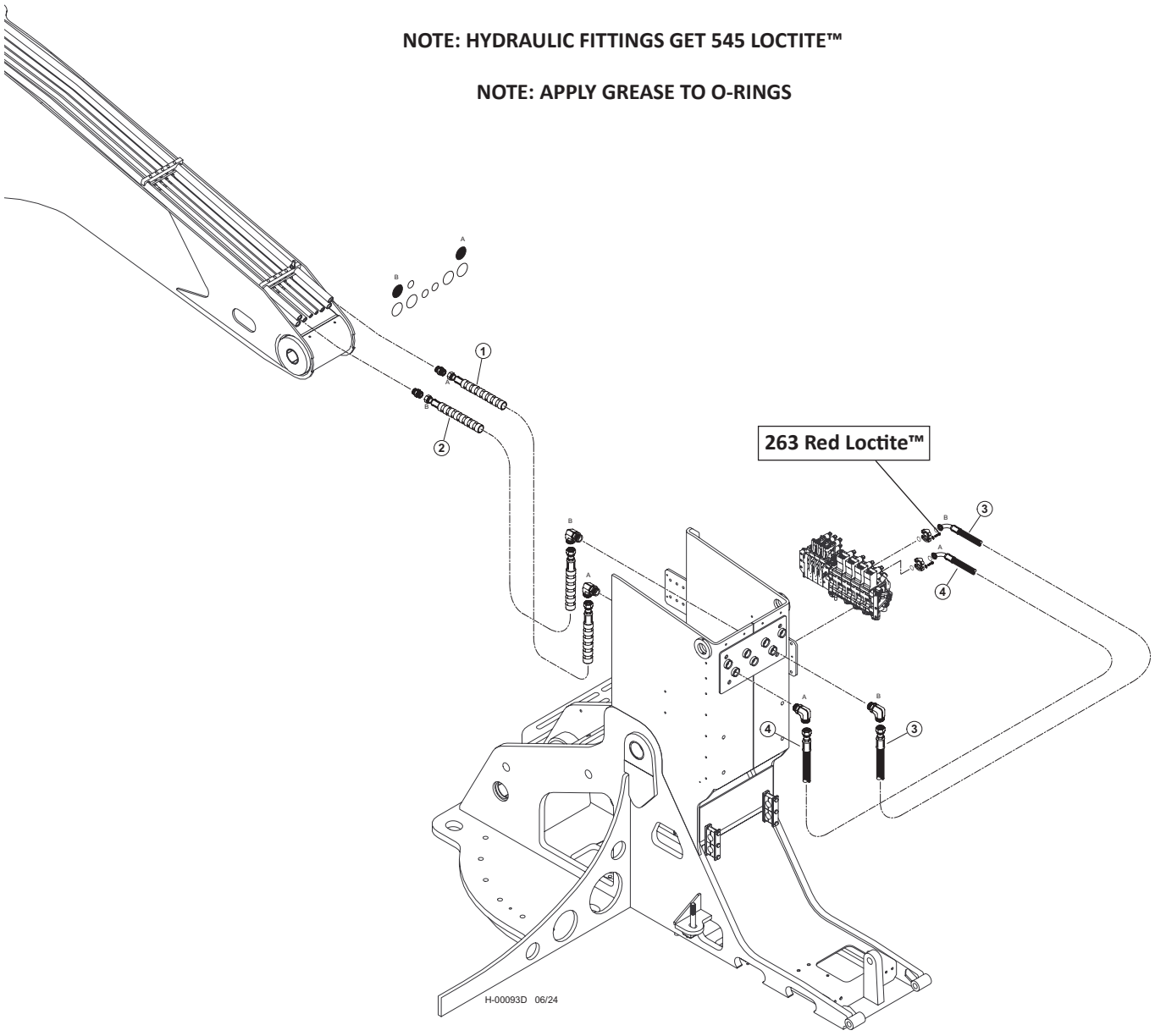


| Item | Part # | Description | Qty. |
|---|---|---|---|
| 1 | (SEE DESCRIPTION) | HOSE ASSY - 722TC39 16-16OS-16OS-SW - (STICK CYLINDER “A”) | 1 |
| 2 | (SEE DESCRIPTION) | HOSE ASSY - 722TC39 16-16OS-16OS-SW - (STICK CYLINDER “B”) | 1 |
| 3 | (SEE DESCRIPTION) | HOSE ASSY - 722TC40 16-16OS-16PA9 - (STICK CYLINDER “B”) | 1 |
| 4 | (SEE DESCRIPTION) | HOSE ASSY - 722TC39 16-16OS-16PA9 - (STICK CYLINDER “A”) | 1 |

# H200-00420 - FIXED STICK BOOM DANGLE PROCESSOR PIPING - STICK BOOM CYLINDER (W450/W300 VALVE) - MAIN VALVE TO BOOM

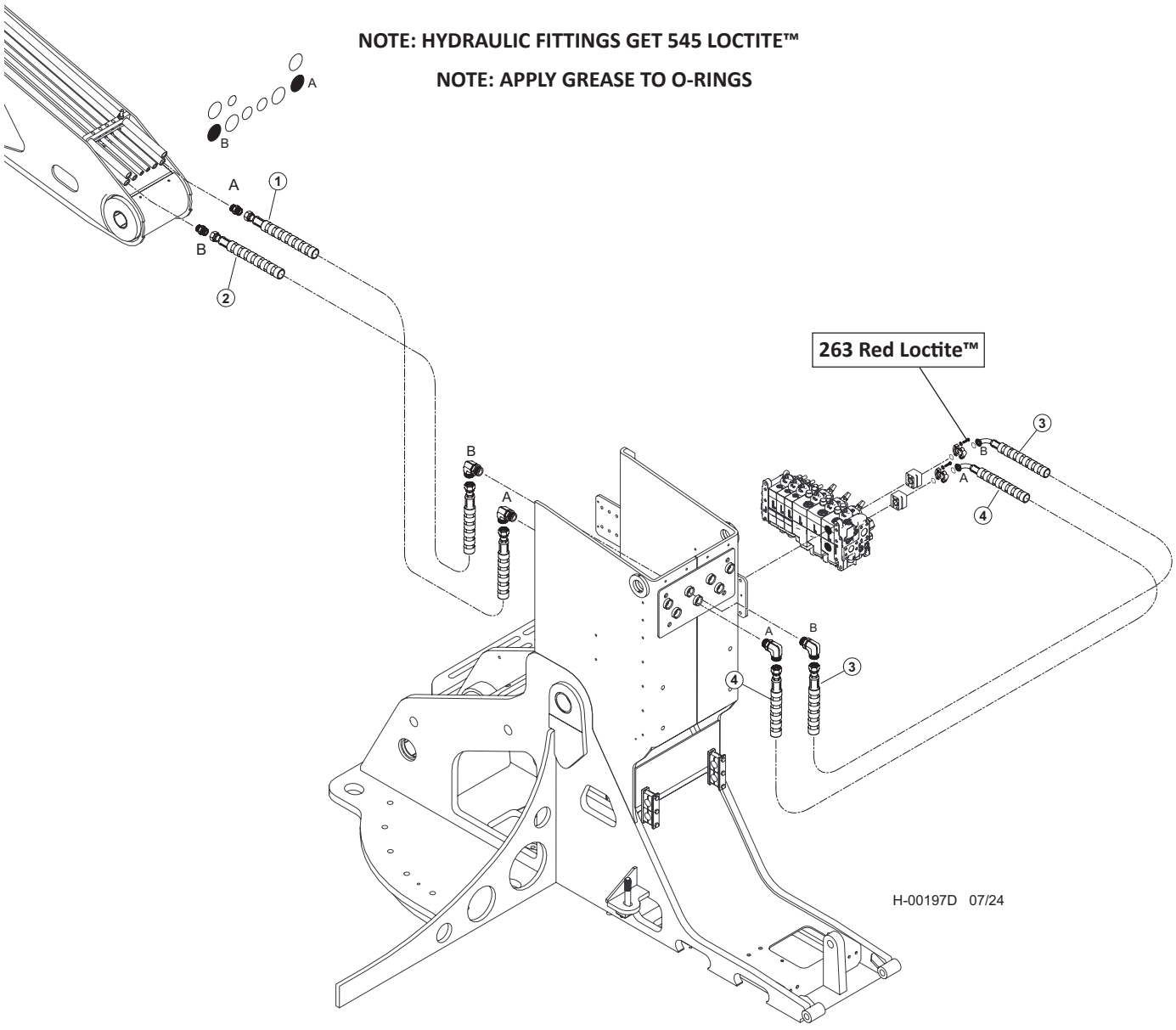


| Item | Part # | Description | Qty. |
|---|---|---|---|
| 1 | 65884 - (65864 - KIT) | HOSE, HYD, 787TC39 16-16OS-16OS-SW **("A" PORT - CHIMNEY TO BOOM)** | 1 |
| 2 | 65885 - (65864 - KIT) | HOSE, HYD, 787TC40 16-16OS-16OS-SW **("B" PORT - CHIMNEY TO BOOM)** | 1 |
| 3 | 66478 - (65897 - KIT) | HOSE, HYD, 787TC38 16-16OS-20PH9-SW **("B" PORT - VALVE TO CHIMNEY)** | 1 |
| 4 | 65460 - (65897 - KIT) | HOSE, HYD, 787TC36 16-16OS-20PH9-SW **("A" PORT - VALVE TO CHIMNEY)** | 1 |

# H100-01090 - FIXED STICK BOOM DANGLE PROCESSOR PIPING - ROTATE (K220/L90 VALVE) - MAIN VALVE TO BOOM

**NOTE: HYDRAULIC FITTINGS GET 545 LOCTITE™**

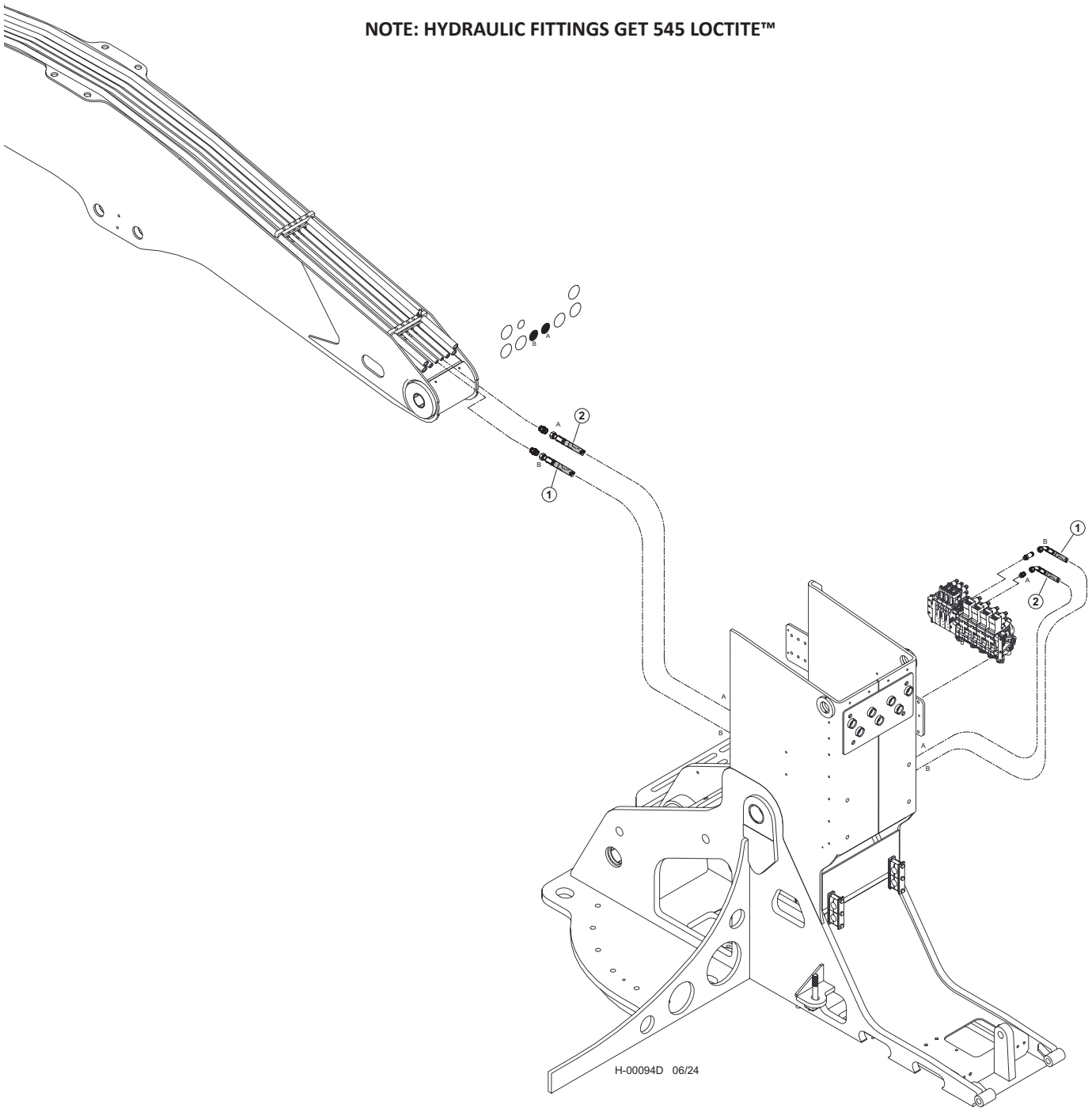


| Item | Part # | Description | Qty. |
|---|---|---|---|
| 1 | 58188 - (KIT) | HOSE ASSY - 722TC61 10-10OS-10O4-W - (ROTATE “B”) | 1 |
| 2 | 58188 - (KIT) | HOSE ASSY - 722TC60 10-10OS-10O4-W - (ROTATE “A”) | 1 |

# H200-00430 - FIXED STICK BOOM DANGLE PROCESSOR PIPING - ROTATE (W450/W300 VALVE) MAIN VALVE TO BOOM

**NOTE: HYDRAULIC FITTINGS GET 545 LOCTITE™**

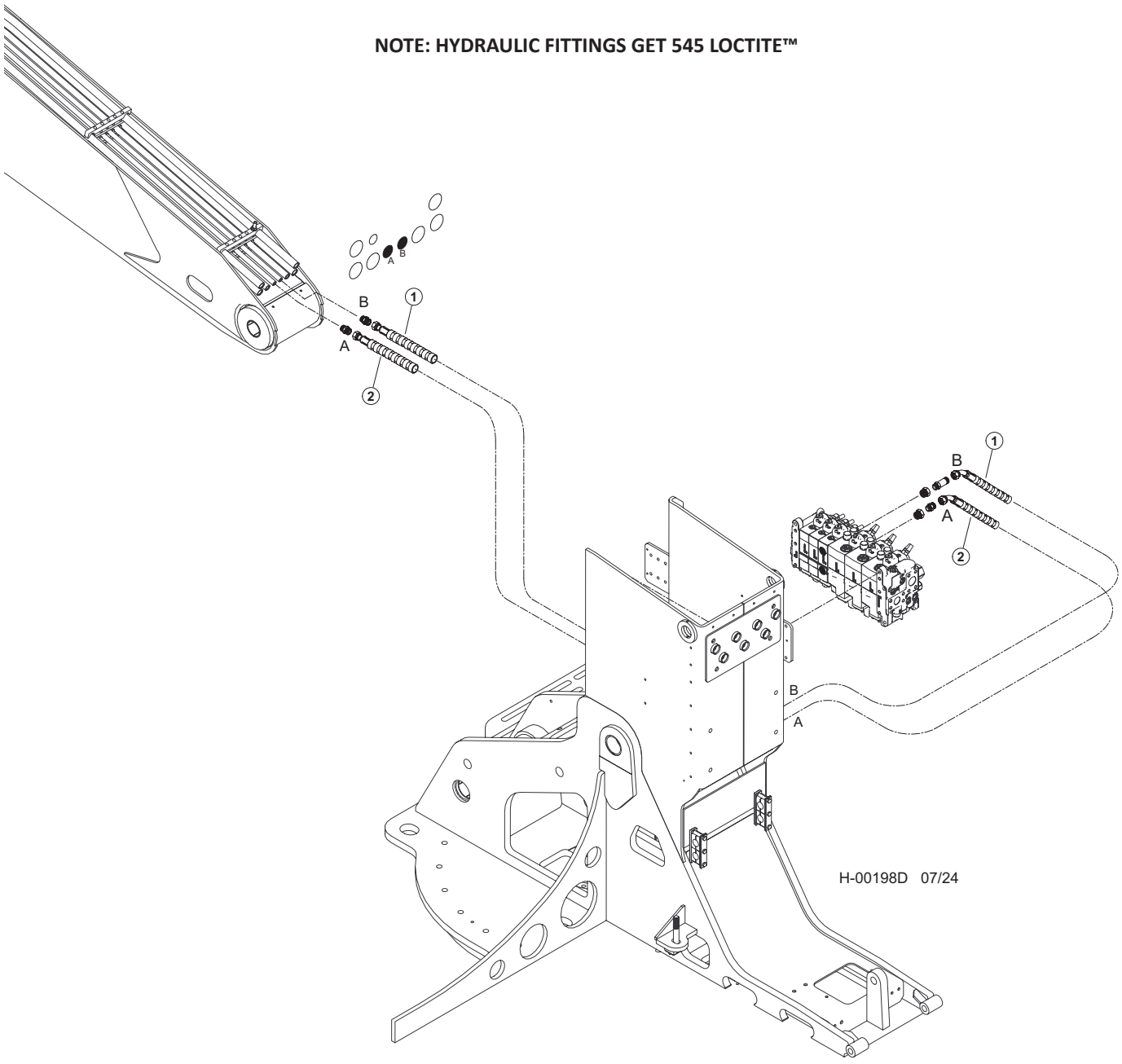


| Item | Part # | Description | Qty. |
|---|---|---|---|
| 1 | 65863 - (65897 - KIT) | HOSE, HYD, 722TC65.5 10-10OS-10O4-W - **(LATERAL TILT "B")** | 1 |
| 2 | 65863 - (65897 - KIT) | HOSE, HYD, 722TC65.5 10-10OS-10O4-W - **(LATERAL TILT "A")** | 1 |

# H100-01100 - FIXED STICK BOOM DANGLE PROCESSOR PIPING - CAB LEVEL (K220/L90 VALVE) MAIN VALVE TO BOOM

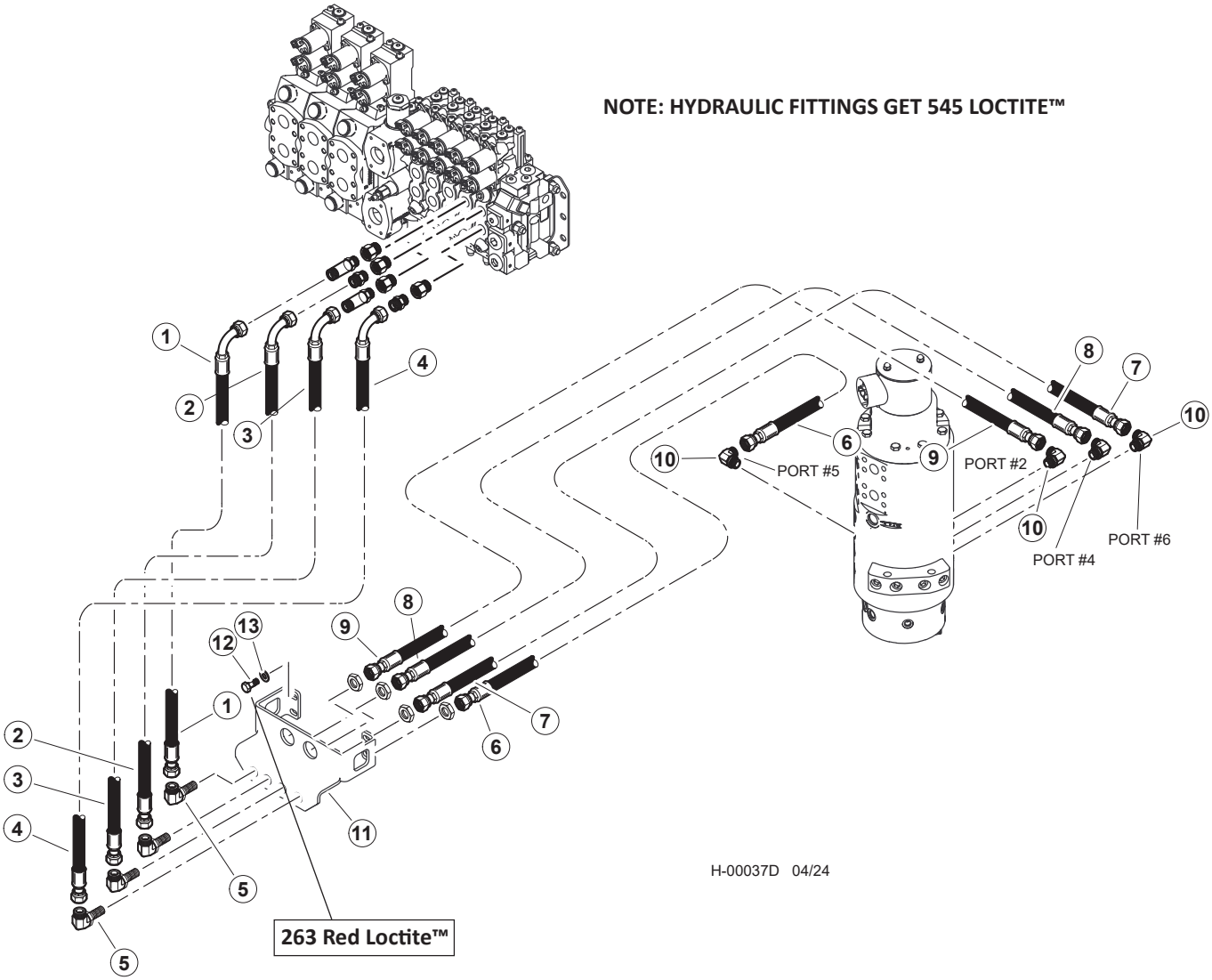


| Item | Part # | Description | Qty. |
|---|---|---|---|
| 1 | 57945 - (KIT) | HOSE ASSY - 787TC42 08-08OS-0809 - (VALVE PORT “B” TO BULKHEAD) | 1 |
| 2 | 57945 - (KIT) | HOSE ASSY - 787TC42 08-08OS-0809 - (VALVE PORT “B” TO BULKHEAD) | 1 |
| 3 | 57945 - (KIT) | HOSE ASSY - 787TC39 08-08OS-0809 - (VALVE PORT “A” TO BULKHEAD) | 1 |
| 4 | 57945 - (KIT) | HOSE ASSY - 787TC39 08-08OS-0809 - (VALVE PORT “A” TO BULKHEAD) | 1 |
| | 57947 | KIT, FITTING TRACK LEVEL-D SERIES | 1 |
| 5 | 24187 | ELBOW, 90 BULKHEAD - 855BH-TT-08 | 4 |
| 6 | 57945 - (KIT) | HOSE ASSY - 787TC30 08-08OS-080S - (BULKHEAD TO PORT #5 ON ROT MAN) | 1 |
| 7 | 57945 - (KIT) | HOSE ASSY - 787TC40 08-08OS-080S - (BULKHEAD TO PORT #6 ON ROT MAN) | 1 |
| 8 | 57945 - (KIT) | HOSE ASSY - 787TC41.5 08-08OS-080S - (BULKHEAD TO PORT #4 ON ROT MAN) | 1 |
| 9 | 57945 - (KIT) | HOSE ASSY - 787TC44 08-08OS-080S - (BULKHEAD TO PORT #2 ON ROT MAN) | 1 |
| 10 | 16360 | ELBOW, 90 - FF1868T-0808S | 4 |
| 11 | 60559 | BULHEAD, FRONT - TM | 1 |
| 12 | 15542 | BOLT - .375” X .75” **263 RED LOCTITE™** | 2 |
| 13 | 15528 | WASHER, SAE FLAT - .375” OR 3/8” | |

# H200-00440 - FIXED STICK BOOM DANGLE PROCESSOR PIPING - CAB LEVEL (W450/W300 VALVE) MAIN VALVE TO BOOM

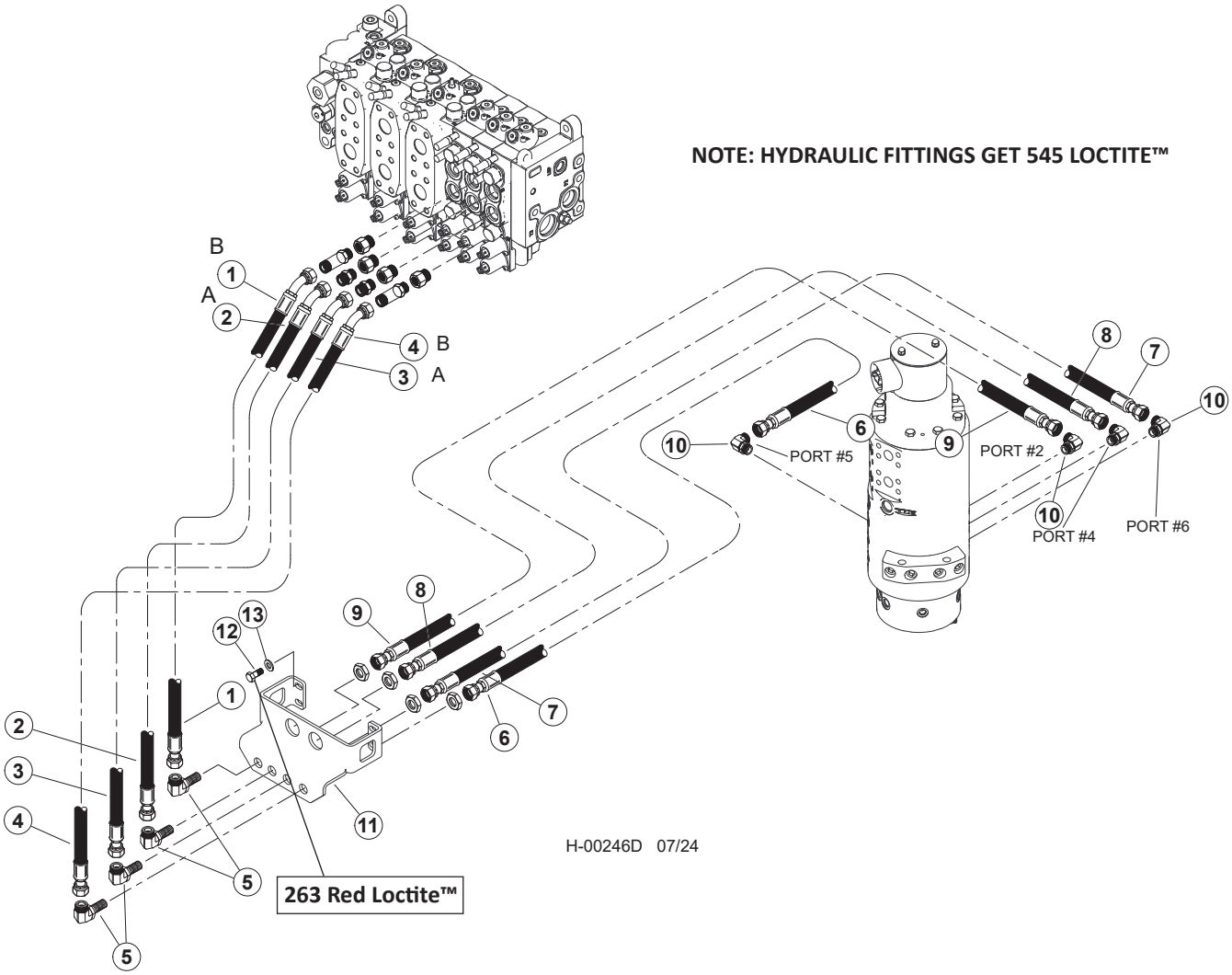


| Item | Part # | Description | Qty. |
|---|---|---|---|
| 1 | 65621 - (65619 - KIT) | HOSE, HYD, 787TC45 08-08OS-08O9 - **(VALVE PORT "B" TO BULKHEAD)** | 1 |
| 2 | 65621 - (65619 - KIT) | HOSE, HYD, 787TC45 08-08OS-08O9 - **(VALVE PORT "B" TO BULKHEAD)** | 1 |
| 3 | 65620 - (65619 - KIT) | HOSE, HYD, 787TC40.5 08-08OS-08O9 - **(VALVE PORT "A" TO BULKHEAD)** | 1 |
| 4 | 65620 - (65619 - KIT) | HOSE, HYD, 787TC40.5 08-08OS-08O9 - **(VALVE PORT "A" TO BULKHEAD)** | 1 |
| | 57947 | KIT, FITTING TRACK LEVEL-D SERIES | 1 |
| 5 | 24187 | ELBOW, 90 BULKHEAD - 855BH-TT-08 | 4 |
| 6 | 65892 - (65891 - KIT) | HOSE ASSY - 787TC30 08-08OS-080S - **(BULKHEAD TO PORT #5 ON ROT MAN)** | 1 |
| 7 | 65893 - (65891 - KIT) | HOSE ASSY - 787TC40 08-08OS-080S - **(BULKHEAD TO PORT #6 ON ROT MAN)** | 1 |
| 8 | 65894 - (65891 - KIT) | HOSE ASSY - 787TC41.5 08-08OS-080S - **(BULKHEAD TO PORT #4 ON ROT MAN)** | 1 |
| 9 | 65895 - (65891 - KIT) | HOSE ASSY - 787TC44 08-08OS-080S - **(BULKHEAD TO PORT #2 ON ROT MAN)** | 1 |
| 10 | 16360 | ELBOW, 90 - FF1868T-0808S | 4 |
| 11 | 60559 | BULHEAD, FRONT - TM | 1 |
| 12 | 15542 | BOLT - .375" X .75" **263 RED LOCTITE™** | 2 |
| 13 | 15528 | WASHER, SAE FLAT - .375" OR 3/8" | 2 |

# H100-01110 - FIXED STICK BOOM DANGLE PROCESSOR PIPING - MAIN BOOM CYLINDER (BULKHEAD FITTING TO CYLINDER)

**NOTE: HYDRAULIC FITTINGS GET 545 LOCTITE™**

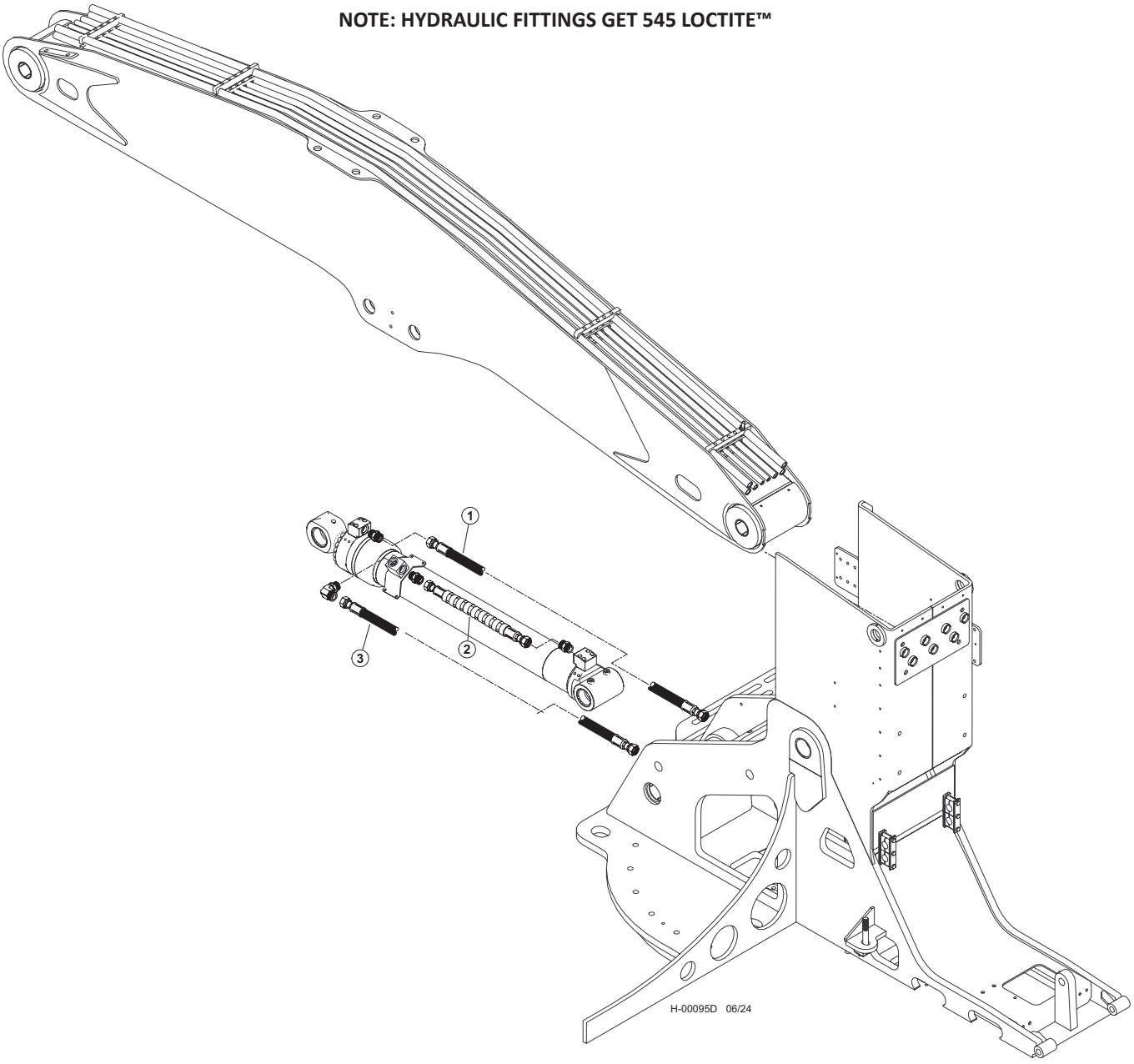


| Item | Part # | Description | Qty. |
|---|---|---|---|
| 1 | 65802 - (65799 -KIT) | HOSE, HYD, 787TC70 16-16OS-16OS - **(ROD END OF BOOM CYLINDER)** | 1 |
| 2 | 65800 - (65799 - KIT) | HOSE, HYD, 787TC45.5 16-16OS-16OS-SW - **(BASE END OF BOOM CYLINDER TO BLOCK)** | 1 |
| 3 | 65801 - (65799 - KIT) | HOSE, HYD, 787TC60 16-16OS-16OS - **(BASE END OF BOOM CYLINDER)** | 1 |

# H100-01120 - FIXED STICK BOOM DANGLE PROCESSOR PIPING - LIGHT WIRE (MAIN BOOM TO STICK BOOM)

**NOTE: HYDRAULIC FITTINGS GET 545 LOCTITE™**

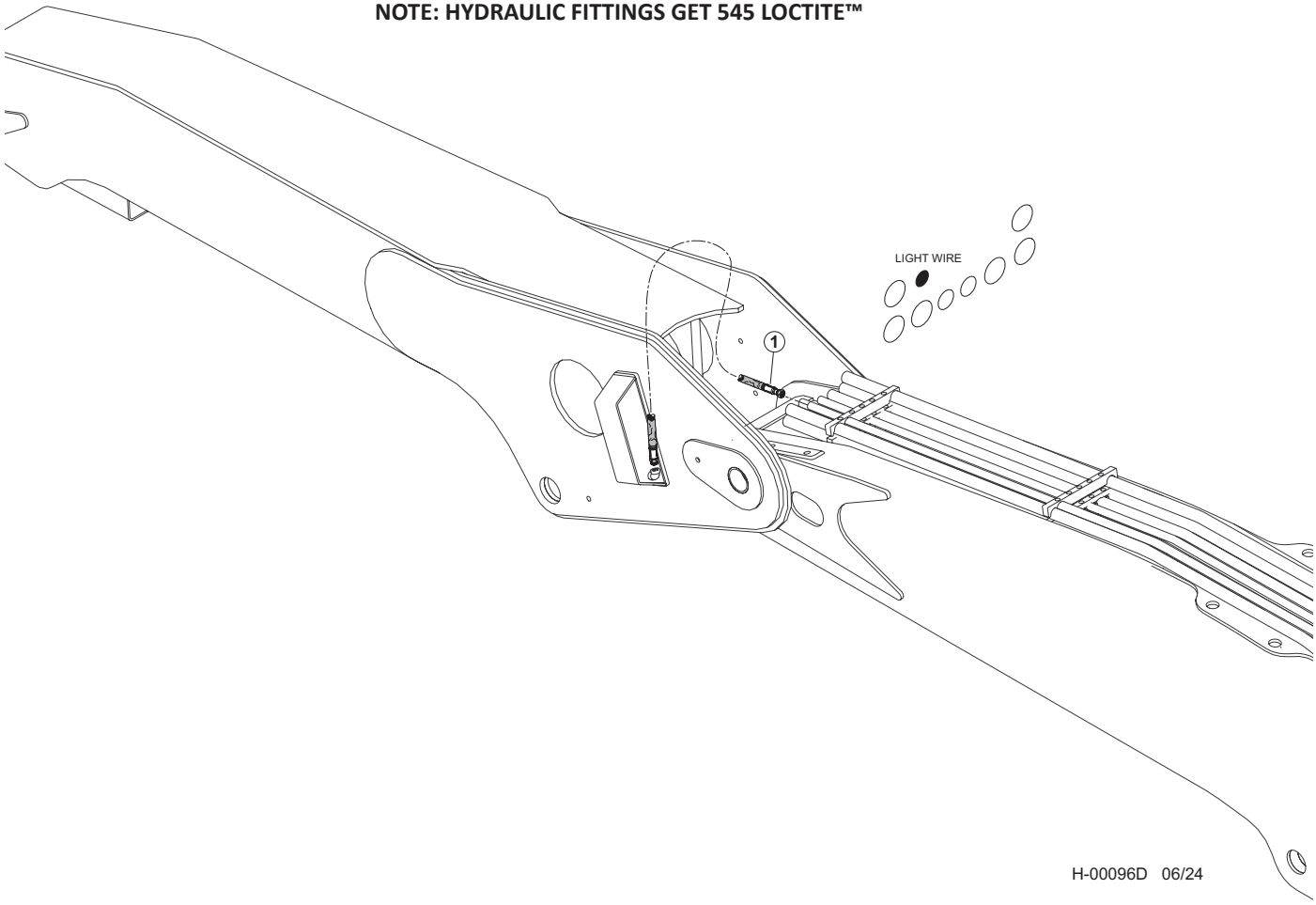


| Item | Part # | Description | Qty. |
|---|---|---|---|
| 1 | 664920 - (664870 - KIT) | HOSE, HYD, 387TC48 06-06OS-08PS-SW - **(LIGHT WIRE)** | 1 |

# H100-01130 - FIXED STICK BOOM DANGLE PROCESSOR PIPING - STICK BOOM (MAIN BOOM TO STICK CYLINDER)

**NOTE: HYDRAULIC FITTINGS GET 545 LOCTITE™**

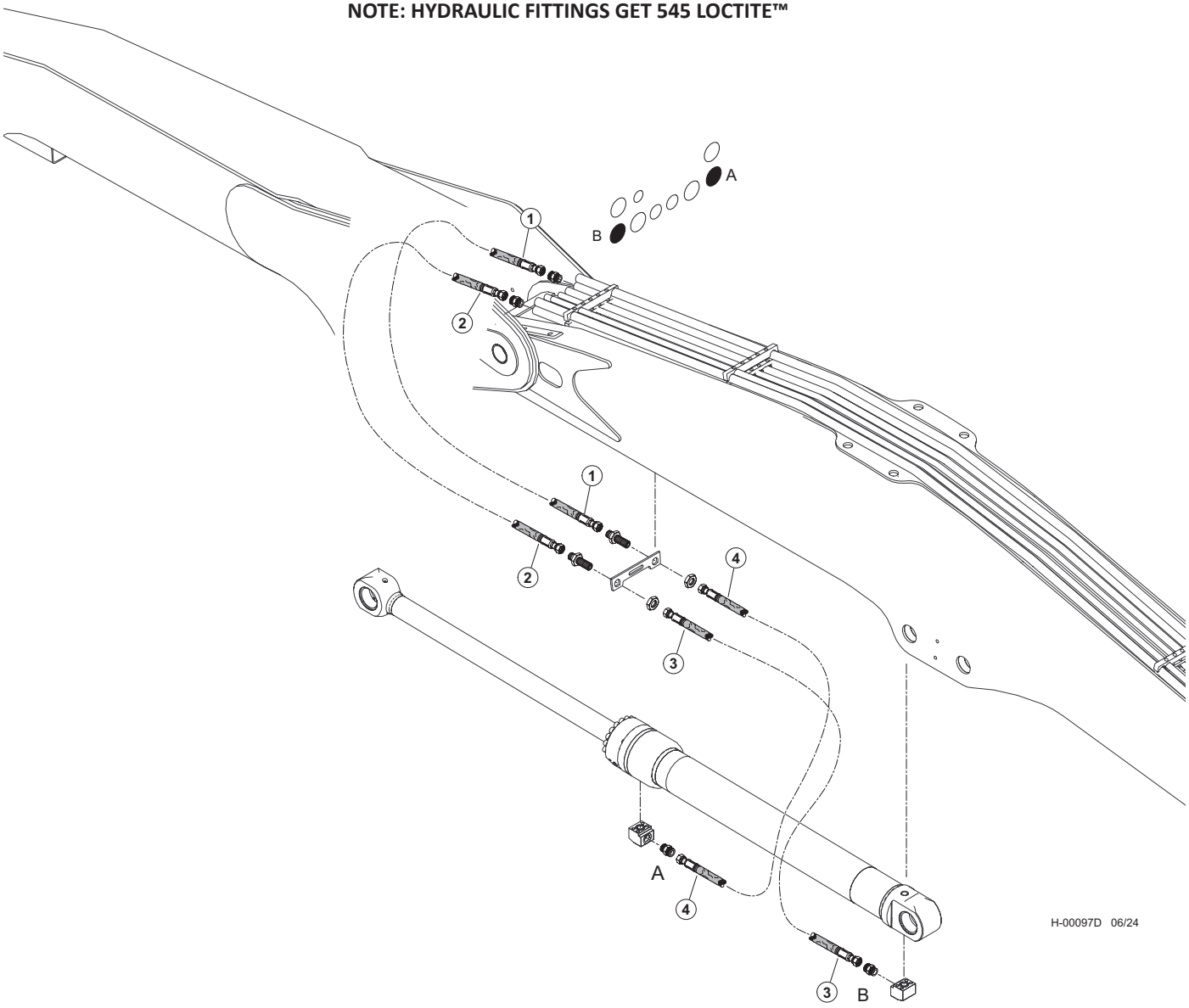


| Item | Part # | Description | Qty. |
|---|---|---|---|
| 1 | 665020 - (664870 - (KIT) | HOSE, HYD, 787TC76 16-16OS-16OS-W - **(STICK CYLINDER ROD)** | 1 |
| 2 | 665020 - (664870 - (KIT) | HOSE, HYD, 787TC76 16-16OS-16OS-W - **(STICK CYLINDER BASE)** | 1 |
| 3 | 665010 - (664880 - (KIT) | HOSE, HYD, 787TC57 16-16OS-16OS-W - **(STICK CYLINDER BASE)** | 1 |
| 4 | 665000 - (664880 - (KIT) | HOSE, HYD, 787TC54 16-16OS-16OS-W - **(STICK CYLINDER ROD)** | 1 |

# H100-01140 - FIXED STICK BOOM DANGLE PROCESSOR PIPING - ROTATE (MAIN BOOM TO STICK BOOM)

**NOTE: HYDRAULIC FITTINGS GET 545 LOCTITE™**

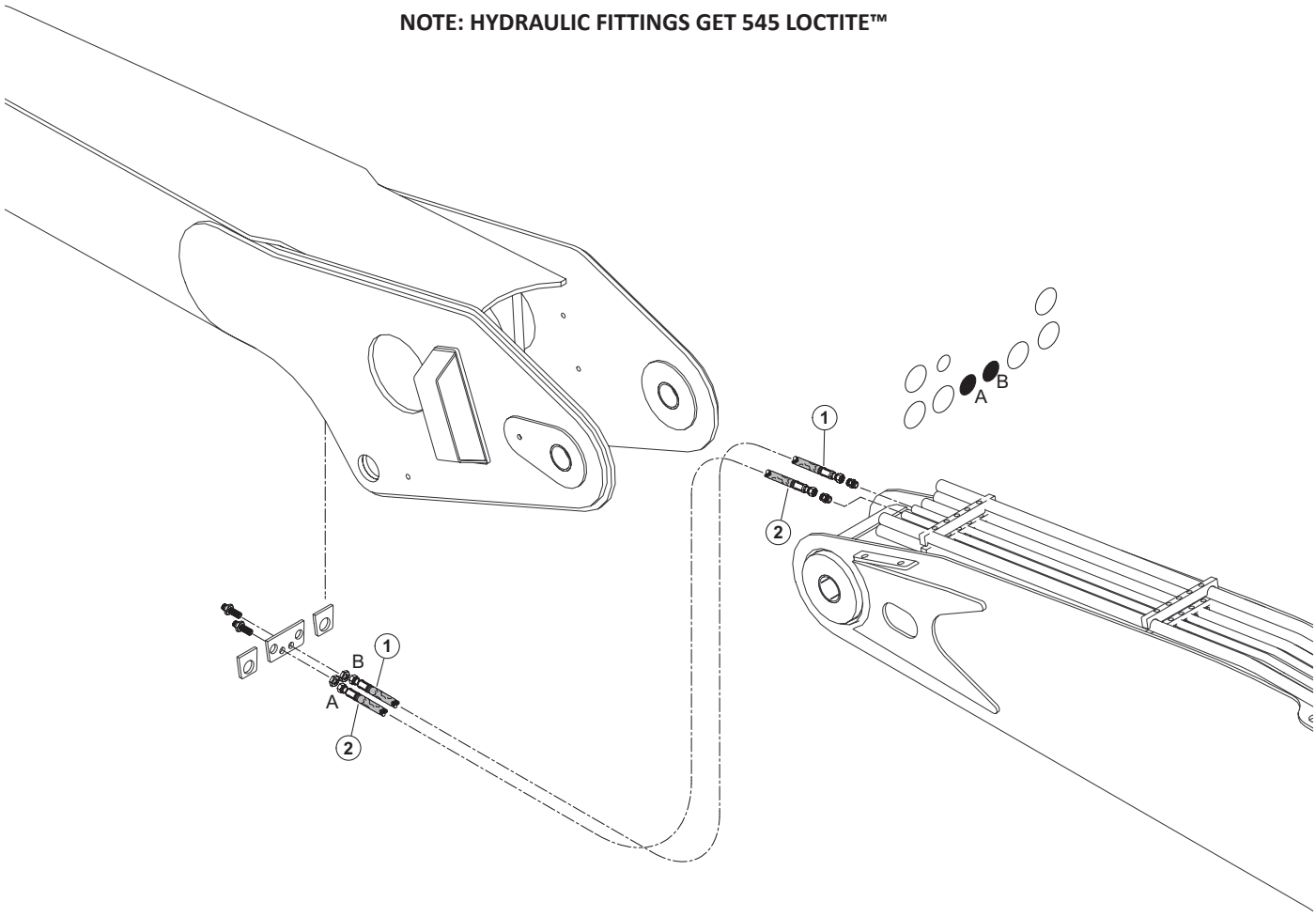


H-00098D 06/24

| Item | Part # | Description | Qty. |
|---|---|---|---|
| 1 | 664980 (664870 - KIT) | HOSE, HYD, 722TC77 08-08OS-08OS-W - (ROTATE “A”) | 1 |
| 2 | 664980 (664870 - KIT) | HOSE, HYD, 722TC77 08-08OS-08OS-W - (ROTATE “B”) | 1 |

# H100-01150 - FIXED STICK BOOM DANGLE PROCESSOR PIPING - PRESSURE & RETURN (MAIN BOOM TO STICK BOOM)

**NOTE: HYDRAULIC FITTINGS GET 545 LOCTITE™**

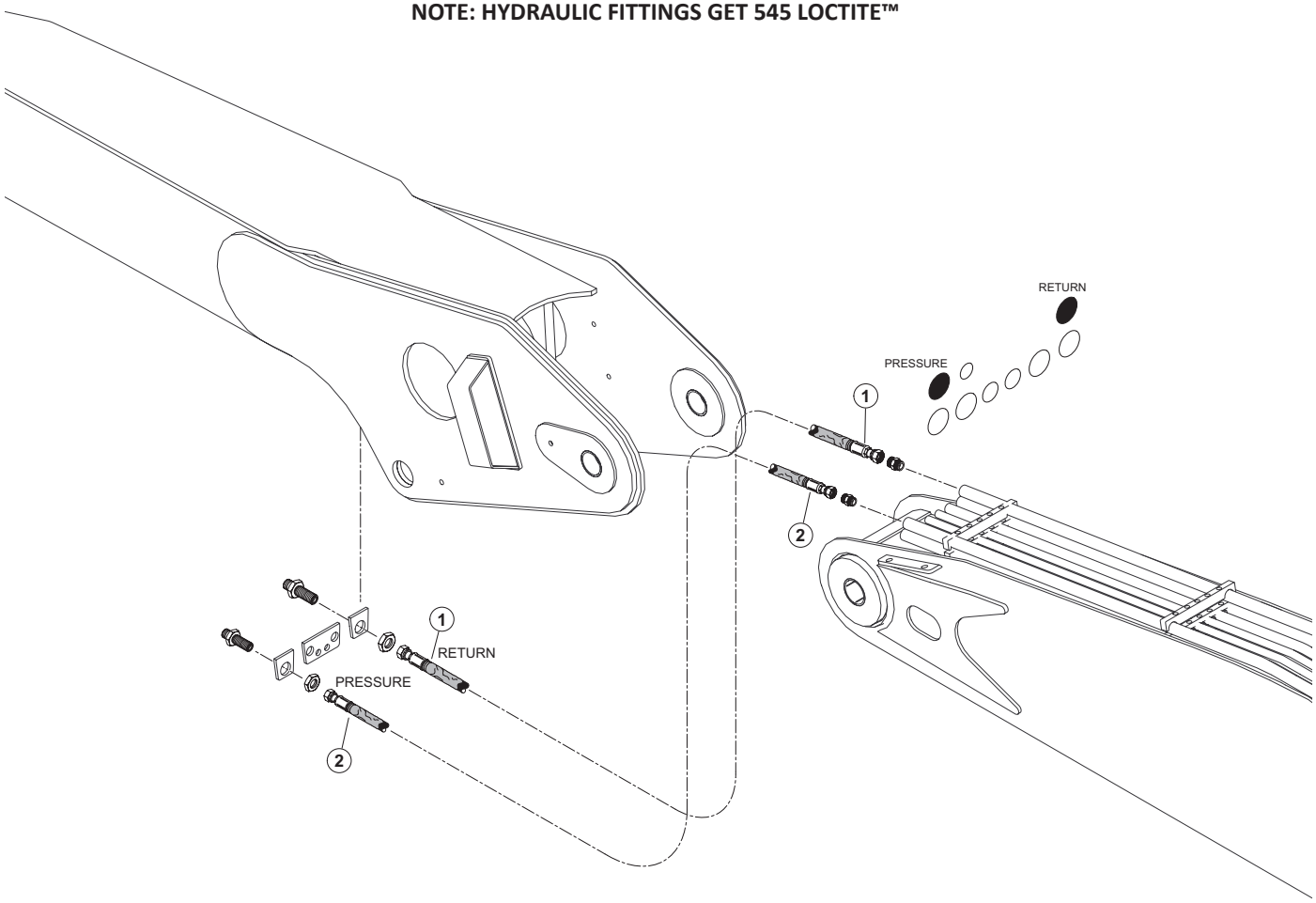


H-00099D 06/24

| Item | Part # | Description | Qty. |
|---|---|---|---|
| 1 | 665040- (664870 - KIT) | HOSE, HYD, 722TC77 20-20OS-20OS-W - **(RETURN)** | 1 |
| 2 | 665030- (664870 - KIT) | HOSE, HYD, 787TC77 16-16OS-16OS-W - **(PRESSURE)** | 1 |

# H100-01160 - FIXED STICK BOOM DANGLE PROCESSOR PIPING - CASE DRAIN & ATTACHMENT ELEC. (MAIN BOOM TO STICK BOOM)

**NOTE: HYDRAULIC FITTINGS GET 545 LOCTITE™**

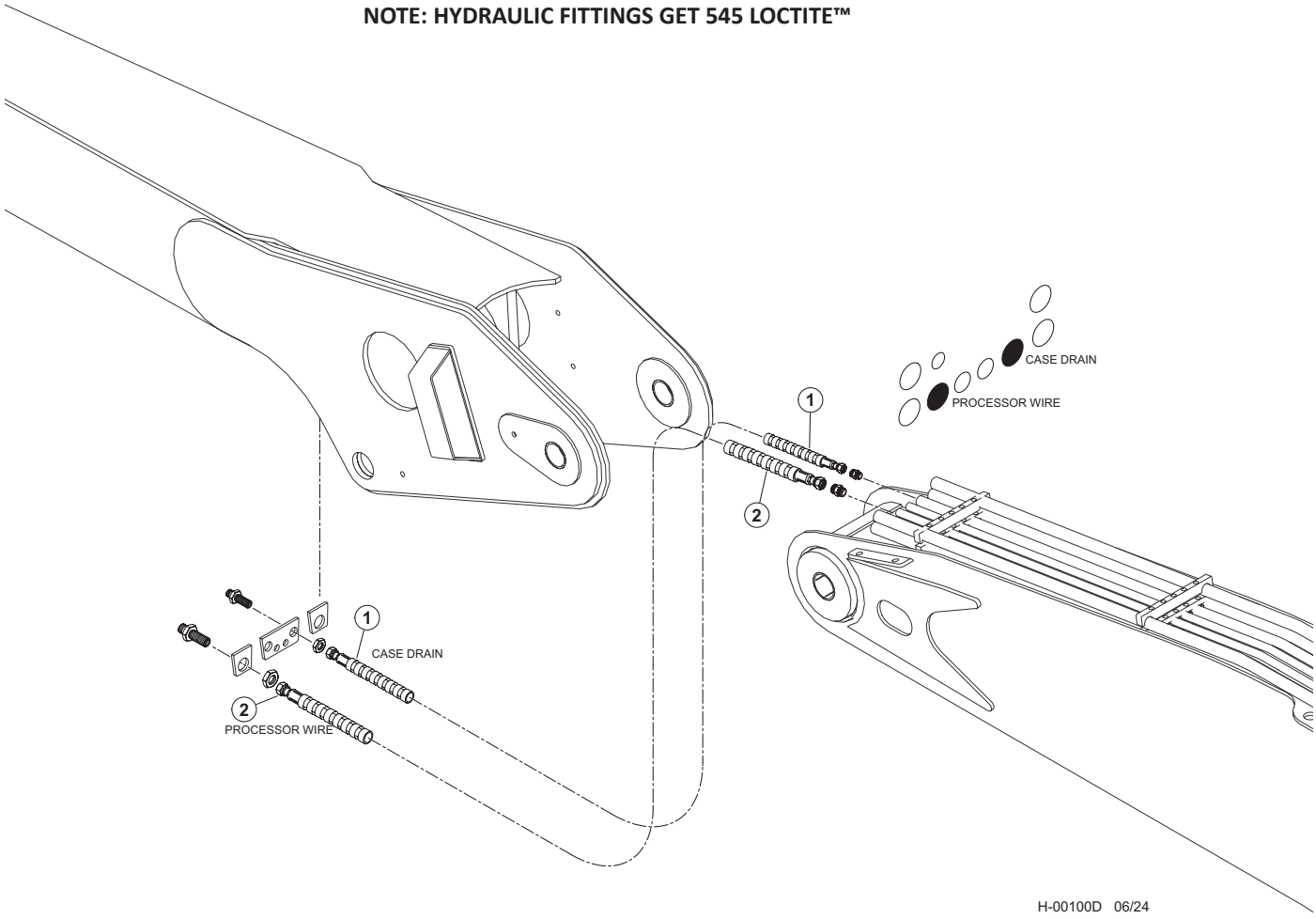


| Item | Part # | Description | Qty. |
|---|---|---|---|
| 1 | 664950 (664870 - KIT) | HOSE, HYD, 387TC77 12-12OS-12OS-SW - **(CASE DRAIN)** | 1 |
| 2 | 664960 (664870 - KIT) | HOSE, HYD, 387TC77 16-16OS-16OS-SW - **(ATTACHMENT WIRE)** | 1 |

# H100-01170 - FIXED STICK BOOM DANGLE PROCESSOR PIPING - GREASE HOSES (MAIN BOOM TO STICK BOOM)

**NOTE: HYDRAULIC FITTINGS GET 545 LOCTITE™**

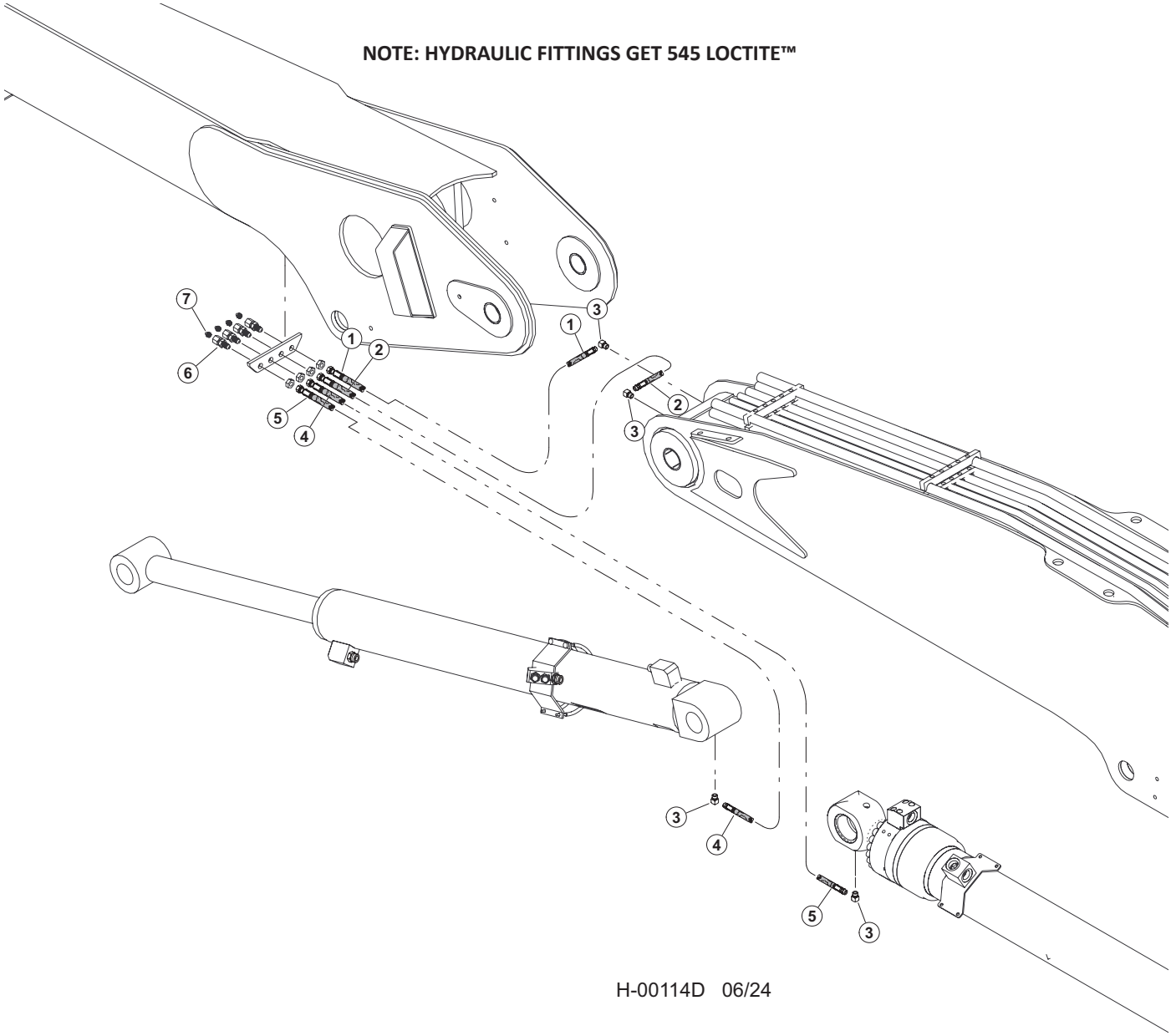


H-00114D 06/24

| Item | Part # | Description | Qty. |
|---|---|---|---|
| 1 | 665240 | HOSE ASSY - HLBD76 02-02PS-04JS - (MAIN BOOM TO BULKHEAD) | 1 |
| 2 | 665250 | HOSE ASSY - HLBD76 02-02PS-04JS-WS100 - (MAIN BOOM TO BULKHEAD) | 1 |
| 3 | 22281 | ELBOW, 1/8-27 NPTF(M), 1/8-17 NPTF(F),90 | 4 |
| 4 | 58188 - (KIT) | HOSE ASSY - HLBD120 02-02PS-04JS-WS100 - (MAIN CYL. ROD TO BULKHEAD) | 1 |
| 5 | 58188 - (KIT) | HOSE ASSY - HLBD120 02- 02PS-04JS-WS100 - (STICK CYL. BASE TO BULKHEAD) | 1 |
| 6 | 15658 | CONNECTOR, STR BULKHEAD - 2239-2-4S | 4 |
| 7 | 10704 | FITTING, GREASE - .125 NPT - STR | 4 |

# H100-01180 - MAIN BOOM PIPING - SQUIRT BOOM PROCESSOR

**NOTE: HYDRAULIC FITTINGS GET 545 LOCTITE™**

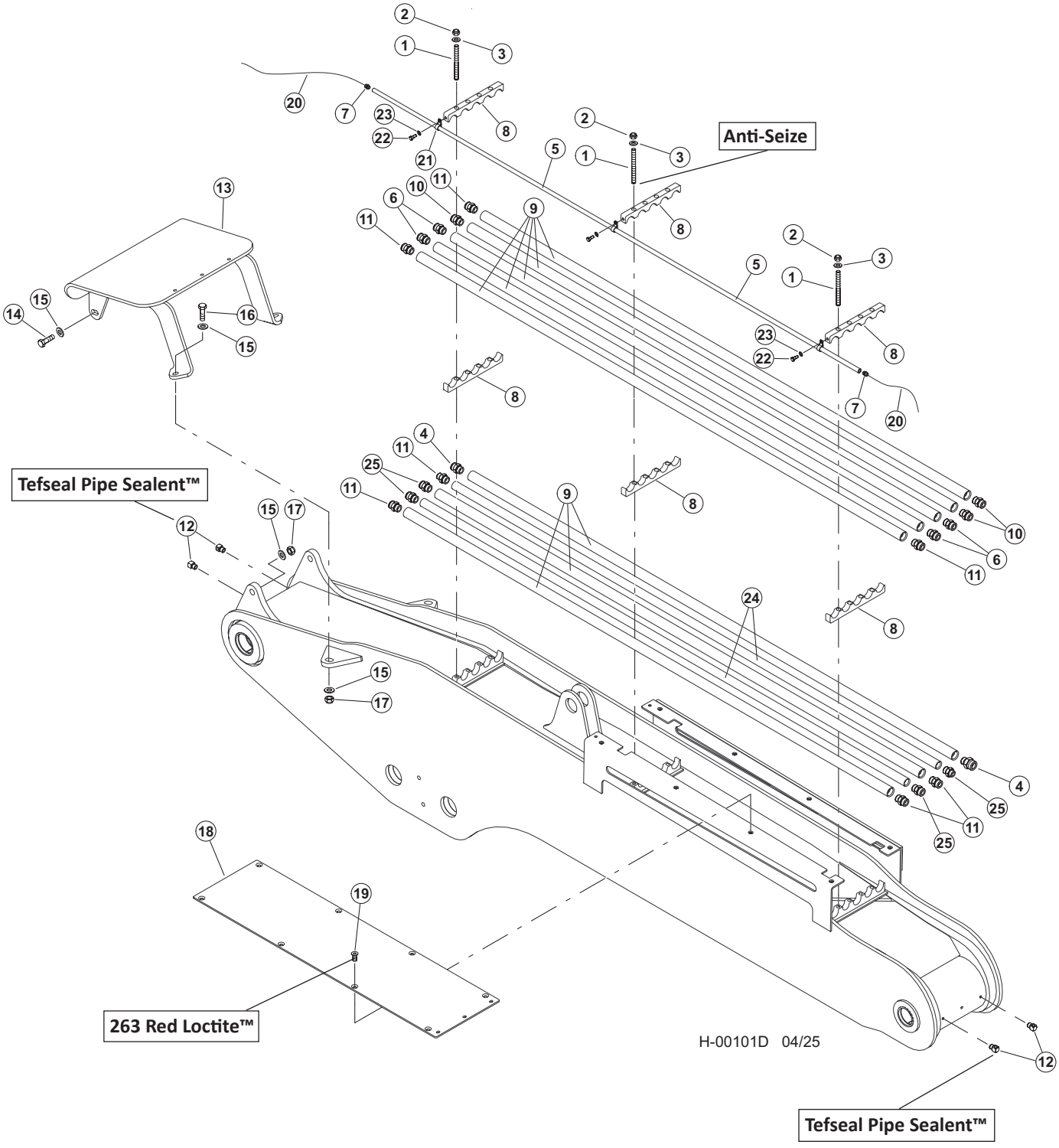

# H100-01180 - MAIN BOOM PIPING - SQUIRT BOOM PROCESSOR

| Item | Part # | Description | Qty. |
|---|---|---|---|
| 1 | 17062 | STUD - .625” X 8” **ANTI-SEIZE** | 12 |
| 2 | 15563 | NUT, NYLOCK - .625” | 12 |
| 3 | 10771 | WASHER, SAE FLAT - .625 | 12 |
| 4 | 17063 | CONNECTOR, STR - FF1852T-2016S | 3 |
| 5 | 53116 | TUBELINE - .3/8” X 108” - BLACK PIPE | 1 |
| 6 | 52866 | CONNECTOR, STR - 10-16 F50LO-S | 4 |
| 7 | 51878 | CONNECTOR, STR - MALE PIPE (6-6 FLO-S) | 2 |
| 8 | 52155 | CLAMP, SADDLE - DRILLED (5-1” TUBES) | 6 |
| 9 | 51833 | TUBELINE - 1” X 108” FB MAIN | 8 |
| 10 | 15226 | CONNECTOR, STR - FF1852T-1216S | 3 |
| 11 | 15225 | CONNECTOR, STR - FF1852T-1616S | 6 |
| 12 | 22281 | ELBOW, 1/8-27 NPTF(M), 1/8-17 NPTF(F),90 **TEFSEAL PIPE SEALENT™** | 4 |
| 13 | 53927 | GUARD, HOSE - MAIN BOOM (FB) | 1 |
| 14 | 58398 | BOLT - .75” X 2.75” | 2 |
| 15 | 10806 | WASHER, FLAT - .75” | 8 |
| 16 | 10840 | BOLT - .75” X 3” | 2 |
| 17 | 10817 | NUT, LOCK - .75” | 4 |
| 18 | 60289 | PLATE, DEBRIS WEAR | 1 |
| 19 | 62036 | BOLT, FLAT HEAD -.5” X 1” DEBRIS GUARD **263 RED LOCTITE™** | 8 |
| 20 | 58380 | CABLE, 2-18 GA PVC UNSHIELDED | AR |
| 21 | 53265 | CLAMP, CUSHIONED LOOP - 5/8” (BOOM) | 3 |
| 22 | 23264 | BOLT - .25” X .5” | 3 |
| 23 | 10757 | WASHER, SAE FLAT - .25” | 3 |
| 24 | 51834 | TUBELINE - .75” X 108” FB MAIN | 2 |
| 25 | 15152 | CONNECTOR, STR - FF1852T-1212S | 4 |

# H100-01190 - STICK BOOM PIPING - SQUIRT BOOM PROCESSOR

**NOTE: HYDRAULIC FITTINGS GET 545 LOCTITE™**

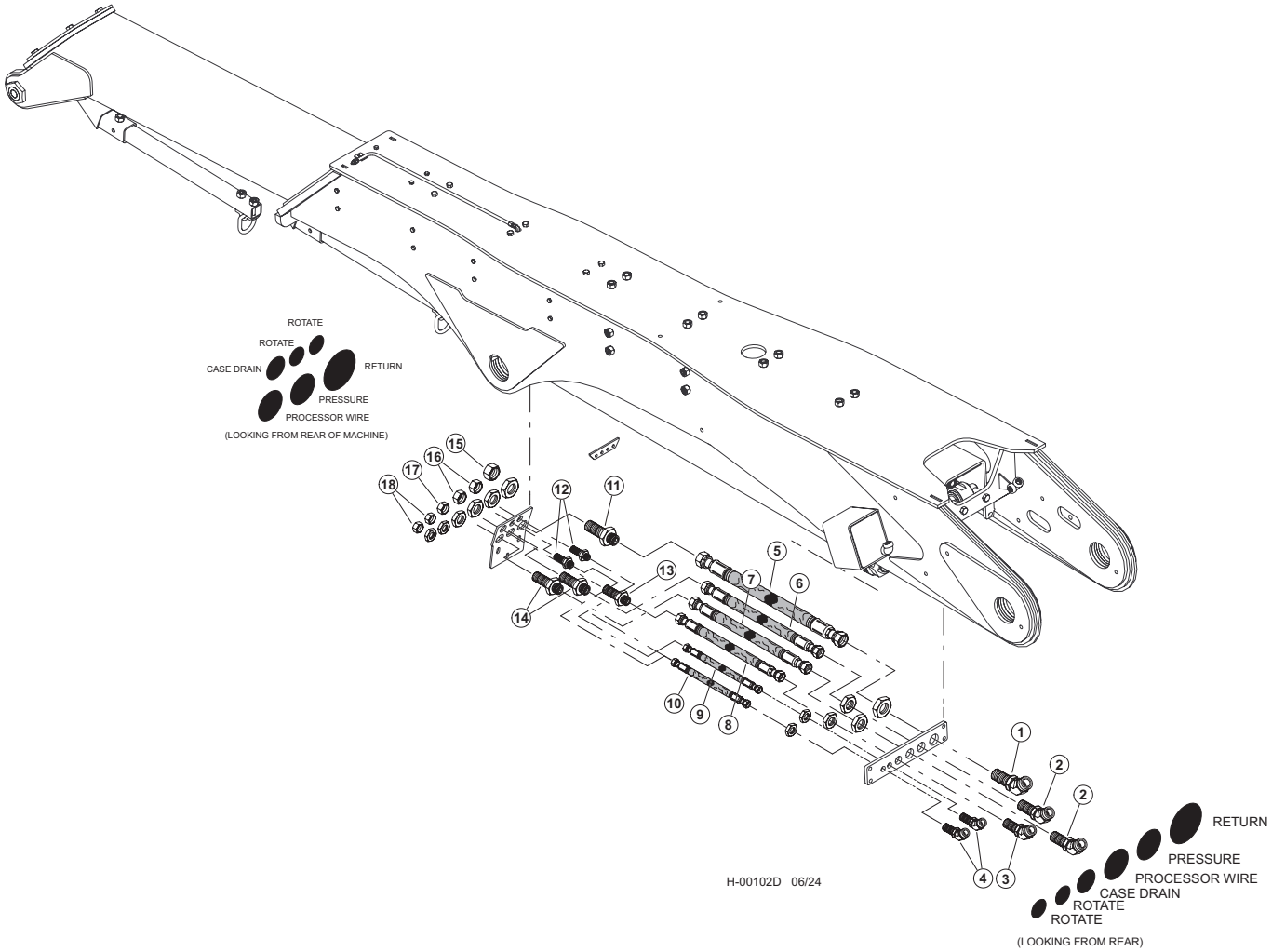

# H100-01190 - STICK BOOM PIPING - SQUIRT BOOM PROCESSOR

| Item | Part # | Description | Qty. |
|---|---|---|---|
| 1 | 55197 - (665280 - KIT) | FITTING, #20 ORS X #20 ORS 45DEG | 1 |
| 2 | 54316 - (665280 - KIT) | ELBOW, BULKHEAD UNION 45DEG #16 | 2 |
| 3 | 55509 - (665280 - KIT) | FITTING, BULKHEAD UNION - 45 DEGREE #12 | 1 |
| 4 | 55509 - (665280 - KIT) | FITTING, BULKHEAD ELBOW - 45 DEGREE #10 | 2 |
| 5 | 665210 - (665090 - (KIT) | HOSE, HYD, 187TC86.5 20-20OS-20OS-W **- (RETURN)** | 1 |
| 6 | 665220 - (665090 - (KIT) | HOSE, HYD, 787TC86.5 16-16OS-16OS-SW **- (PRESSURE)** | 1 |
| 7 | 665200 - (665090 - (KIT) | HOSE, HYD, 187TC86.5 16-16OS-16OS-SW **- (PROCESSOR WIRE)** | 1 |
| 8 | 665190 - (665090 - (KIT) | HOSE, HYD, 187TC86.5 12-12OS-12OS-SW **- (CASE DRAIN)** | 1 |
| 9 | 665230 - (665090 - (KIT) | HOSE, HYD, 722TC87 10-10OS-10OS-W **- (ROTATE “A”)** | 1 |
| 10 | 665230 - (665090 - (KIT) | HOSE, HYD, 722TC87 10-10OS-10OS-W **- (ROTATE “B”)** | 1 |
| 11 | 54743 - (665280 - KIT) | FITTING, 20 WLO-WLNL-S - BULKHEAD | 1 |
| 12 | 50037 - (665280 - KIT) | CONNECTOR, STR BULKHEAD - 832-TT-10 | 2 |
| 13 | 19754 - (665280 - KIT) | CONNECTOR, STR BULKHEAD - 12 WLO-WLNL-S | 1 |
| 14 | 20033 - (665280 - KIT) | CONNECTOR, STR BULKHEAD - 832-TT-16 | 2 |
| 15 | 17075 - (665280 - KIT) | CAP - FF9863-20S | 1 |
| 16 | 15436 - (665280 - KIT) | CAP - FF9863-16S | 2 |
| 17 | 15437 - (665280 - KIT) | CAP - FF9863-12S | 1 |
| 18 | 52242 - (665280 - KIT) | CAP - 10 FNL-S | 2 |

# H100-01200 - SQUIRT BOOM PROCESSOR PIPING - PRESSURE, CASE DRAIN & LOAD SENSE - (K220/L90 VALVE) - VALVE TO BOOM

**NOTE: HYDRAULIC FITTINGS GET 545 LOCTITE™**

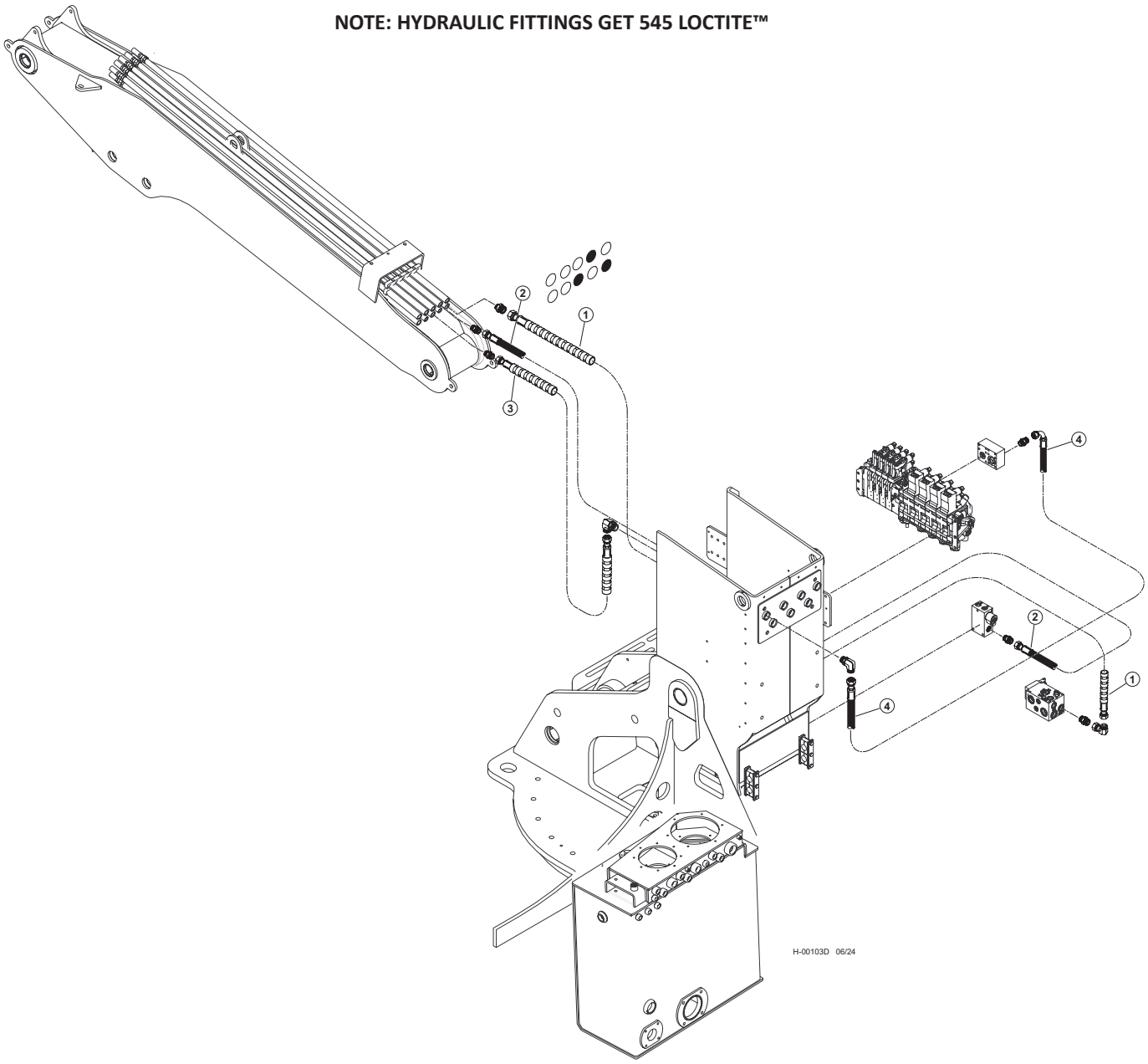


| Item | Part # | Description | Qty. |
|---|---|---|---|
| 1 | 55675 - (KIT) | HOSE ASSY - 187TC58 20-20JS-20OS-SW - (ATTACHMENT RETURN) | 1 |
| 2 | 55675 - (KIT) | HOSE ASSY - 722TC54 12-12OS-12OS-W - (ATTACHMENT CASE DRAIN) | 1 |
| 3 | 55675 - (KIT) | HOSE ASSY - 722TC40 16-16OS-16OS-SW - (ATTACHMENT PRESSURE) | 1 |
| 4 | (SEE DESCRIPTION) | HOSE ASSY - 787TC32 16-16OS-16O9 - (ATTACHMENT PRESSURE) | 1 |

# H200-00450 - SQUIRT BOOM PROCESSOR PIPING - PRESSURE, CASE DRAIN & LOAD SENSE - (W450/W300 VALVE) - VALVE TO BOOM

**NOTE: HYDRAULIC FITTINGS GET 545 LOCTITE™**

**NOTE: APPLY GREASE TO O-RINGS**

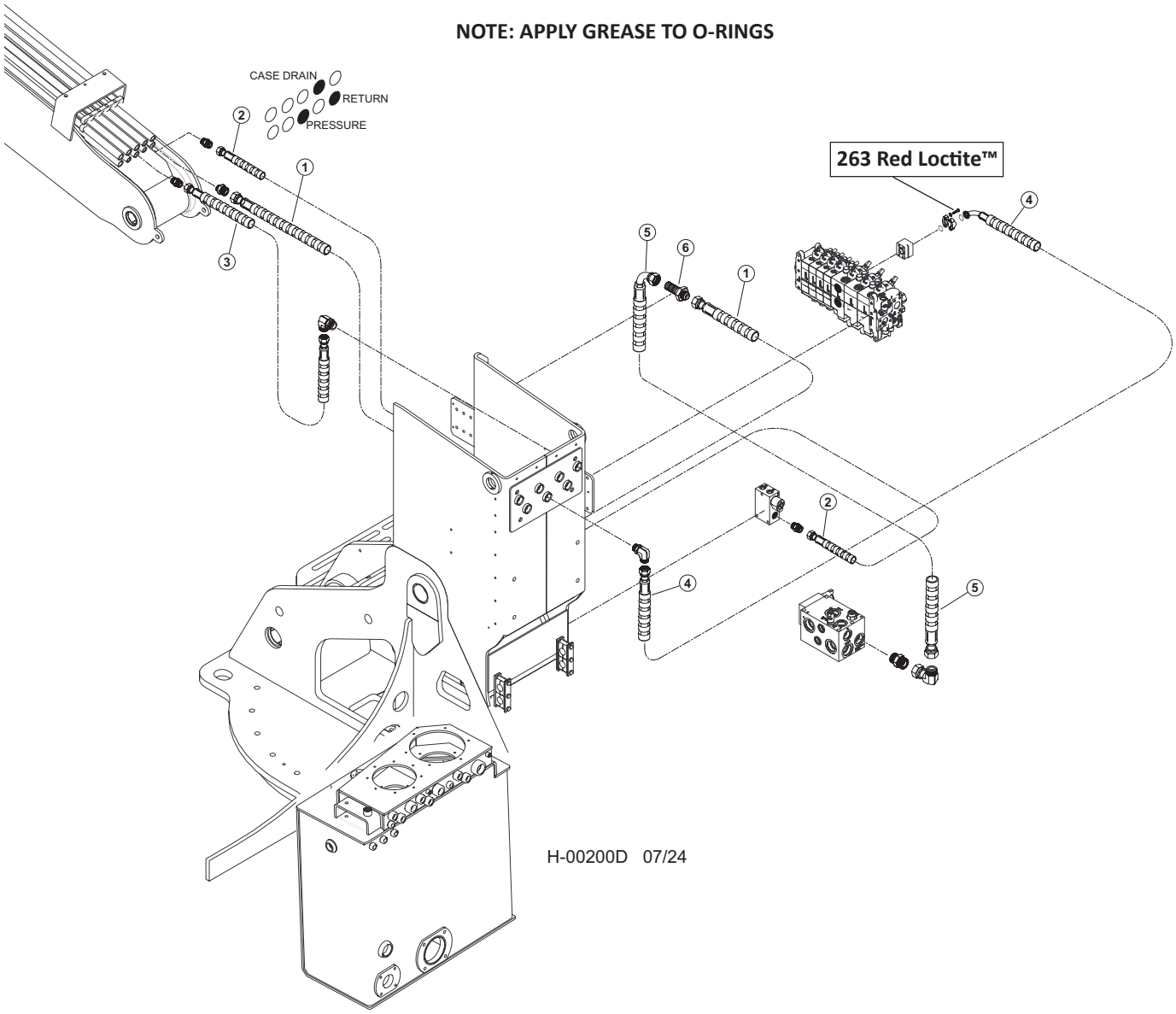


| Item | Part # | Description | Qty. |
|---|---|---|---|
| 1 | 66477 - (65991 - KIT) | HOSE, HYD, 187TC53 20-20JS-20OS-SW - **(ATTACHMENT RETURN)** | 1 |
| 2 | 66485 - (65991 - KIT) | HOSE, HYD, 187TC54 12-12OS-12OS-SW - **(ATTACHMENT CASE DRAIN)** | 1 |
| 3 | 65884 - (65991 - KIT) | HOSE, HYD, 787TC39 16-16OS-16OS-SW - **(VALVE PRESSURE)** | 1 |
| 4 | 66478 - (65990 - KIT) | HOSE, HYD, 787TC38 16-16OS-20PH9-SW - **(VALVE PRESSURE)** | 1 |
| 5 | 65677 - (65991 - KIT) | HOSE, HYD, 187TC42 20-20JS-20J9-SW - **(RETURN)** | 1 |
| 6 | 57491- (57950- KIT) | FITTING, 20 WTX-WLN-S | 1 |

# H100-01210 - SQUIRT BOOM PROCESSOR PIPING - STICK BOOM CYLINDER (K220/L90 VALVE) MAIN VALVE TO BOOM

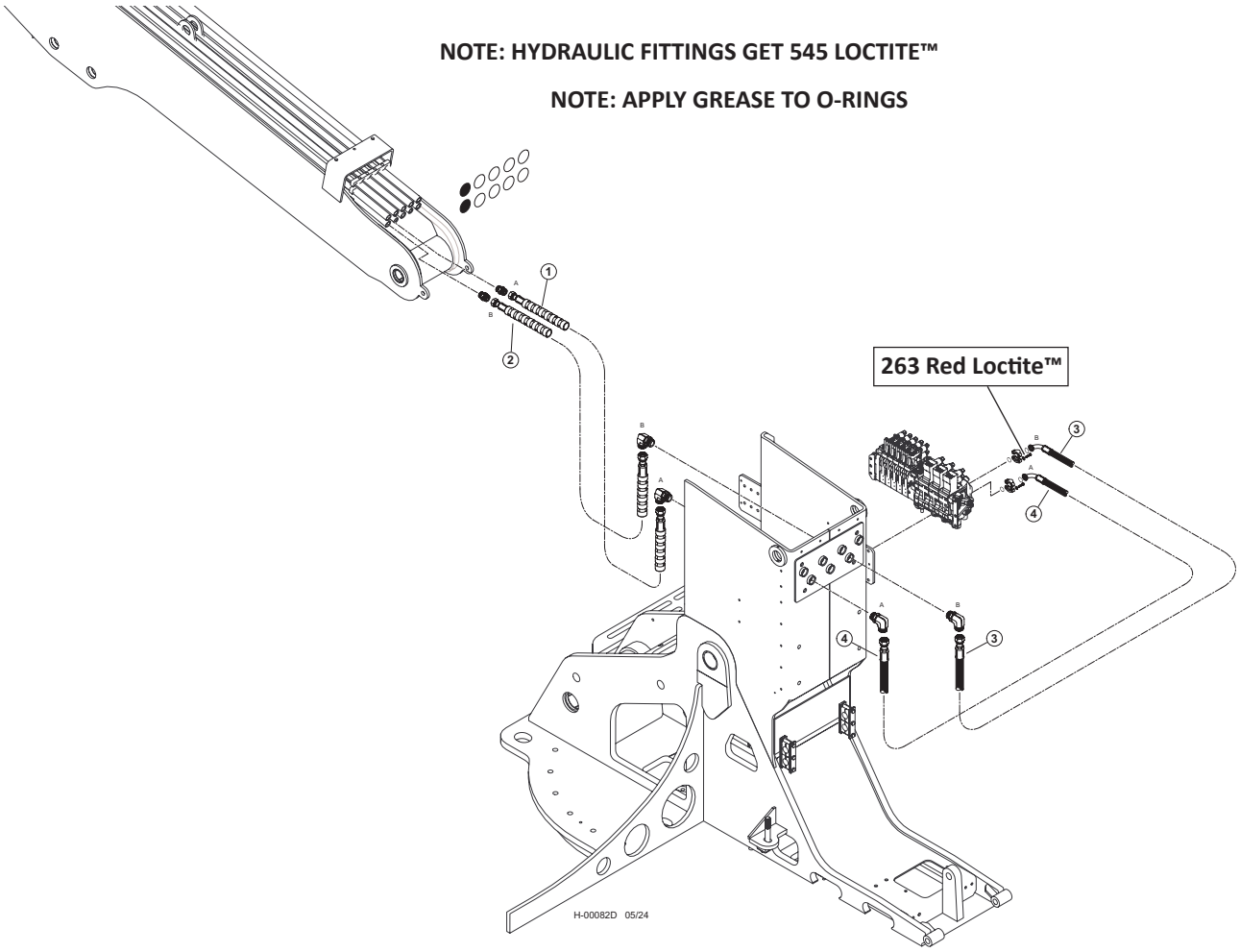


| Item | Part # | Description | Qty. |
|---|---|---|---|
| 1 | 55675 - (KIT) | HOSE ASSY - 722TC39 16-16OS-16OS-SW - (STICK CYLINDER “A”) | 1 |
| 2 | 55675 - (KIT) | HOSE ASSY - 722TC39 16-16OS-16OS-SW - (STICK CYLINDER “B”) | 1 |
| 3 | 55675 - (KIT) | HOSE ASSY - 722TC40 16-16OS-16PA9 - (STICK CYLINDER “B”) | 1 |
| 4 | 55675 - (KIT) | HOSE ASSY - 722TC39 16-16OS-16PA9 - (STICK CYLINDER “A”) | 1 |

# H200-00460 - SQUIRT BOOM PROCESSOR PIPING - STICK BOOM CYLINDER (W450/W300 VALVE) - MAIN VALVE TO BOOM

**NOTE: HYDRAULIC FITTINGS GET 545 LOCTITE™**

**NOTE: APPLY GREASE TO O-RINGS**

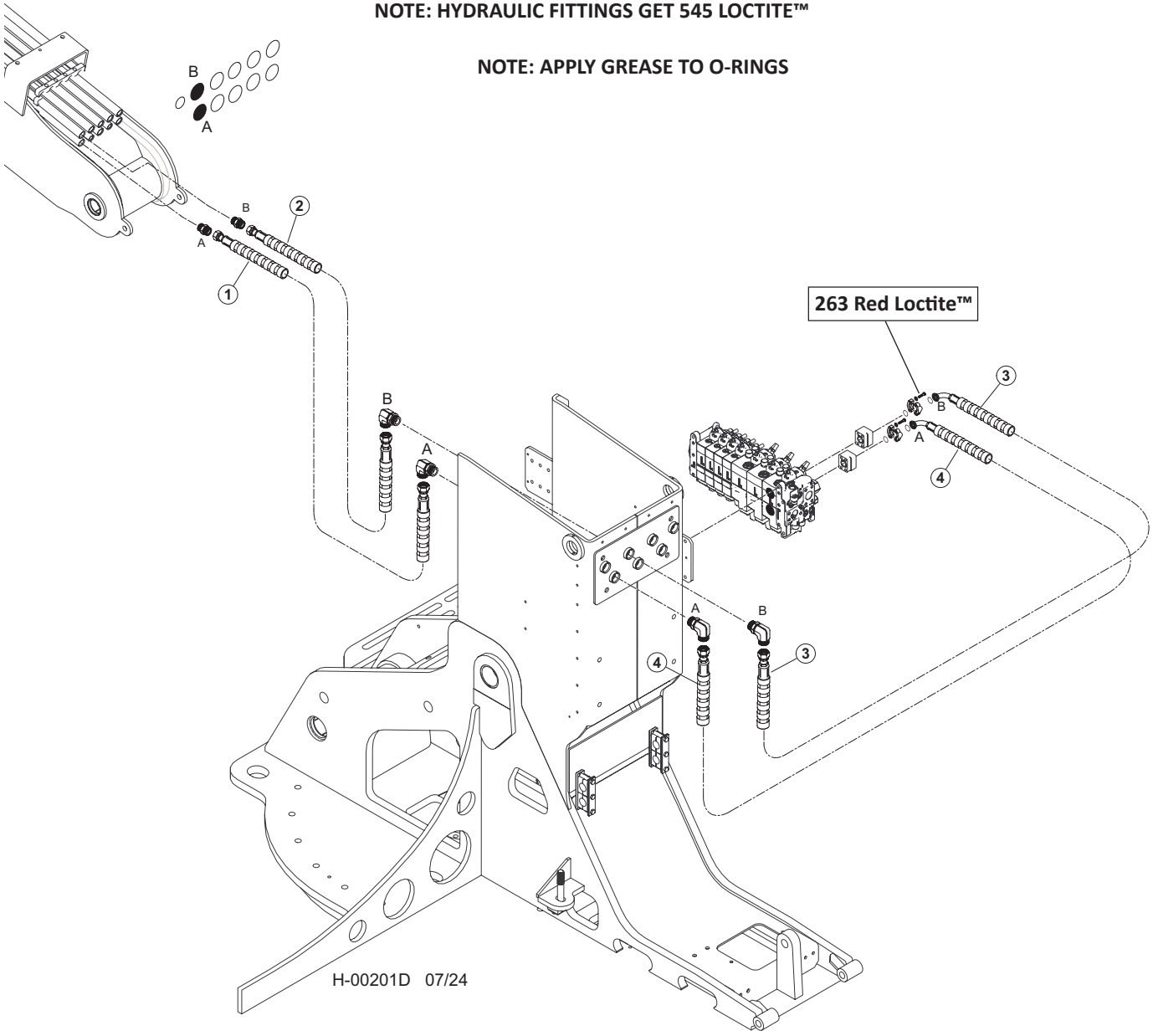


| Item | Part # | Description | Qty. |
|---|---|---|---|
| 1 | 66484 - (65990 - KIT) | HOSE, HYD, 787TC39.5 16-16OS-20PH9-SW **("A" PORT - CHIMNEY TO BOOM)** | 1 |
| 2 | 65460 - (65990 - KIT) | **H**OSE, HYD, 787TC36 16-16OS-20PH9-SW **("B" PORT - CHIMNEY TO BOOM)** | 1 |
| 3 | 65885 - (65991 - KIT) | HOSE, HYD, 787TC40 16-16OS-16OS-SW **("B" PORT - VALVE TO CHIMNEY)** | 1 |
| 4 | 65884 - (65991 - KIT) | HOSE, HYD, 787TC39 16-16OS-16OS-SW **("A" PORT - VALVE TO CHIMNEY)** | 1 |

# H100-01220 - SQUIRT BOOM PROCESSOR PIPING - MAIN BOOM (K220/L90 VALVE)
# MAIN VALVE TO BOOM

**NOTE: HYDRAULIC FITTINGS GET 545 LOCTITE™**

**NOTE: APPLY GREASE TO O-RINGS**

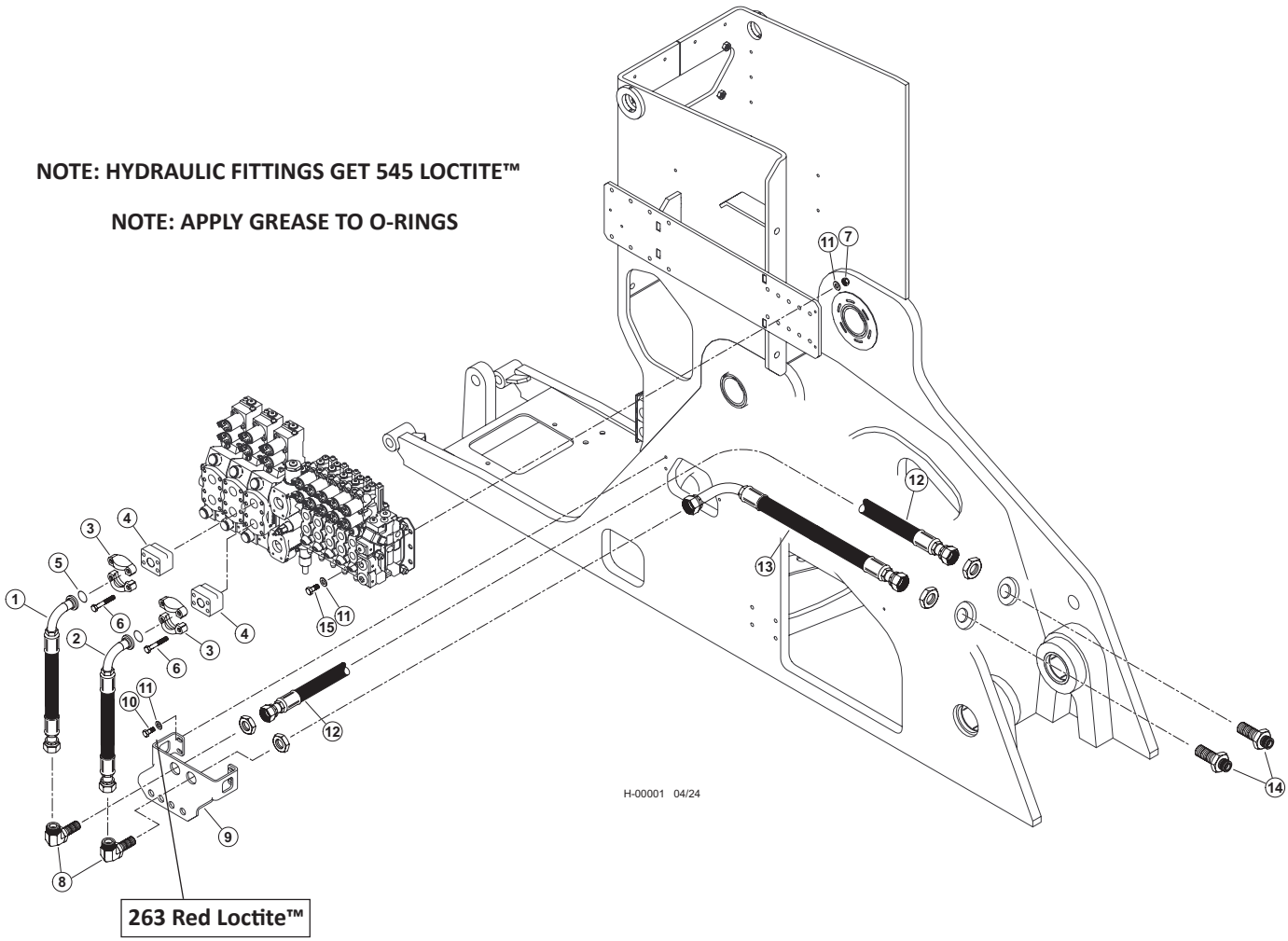


| Item | Part # | Description | Qty. |
|---|---|---|---|
| 1 | 59741 - (KIT) | HOSE ASSY - 787TC35.5 16-16OS-16PA9 - (BOOM “B”) | 1 |
| 2 | 59741 - (KIT) | HOSE ASSY - 787TC31 16-16OS-16PA9 - (BOOM “A”) | 1 |
| 3 | 15111 | KIT, SPLIT FLANGE CODE 61 1 INCH | 2 |
| 4 | 46248 | MANIFOLD, VALVE BLOCK SAE 1” CODE 62 | 2 |
| 5 | 15377 | O-RING - 1” SF | 2 |
| 6 | 55664 | BOLT, ALLEN HEAD - 10MM-1.5P X 80MM | 8 |
| 7 | 10813 | NUT, LOCK - .375” | 4 |
| 8 | 53680 | FITTING, BULKHEAD UNION ELBOW 16 WELO-WN | 2 |
| 9 | 60559 | BULHEAD, FRONT - TM | 1 |
| 10 | 15542 | BOLT - .375” X .75” **263 RED LOCTITE™** | 4 |
| 11 | 15528 | WASHER, SAE FLAT - .375” | 12 |
| 12 | 59741 - (KIT) | HOSE ASSY - 787TC43 16-16OS-16OS<br>**(MAIN BOOM CYLINDER BASE END BULKHEAD TO BULKHEAD PLATE)** | 1 |
| 13 | 59741 - (KIT) | HOSE ASSY - 787TC30 16-16OS-16O9L<br>**(MAIN BOOM CYLINDER ROD END BULKHEAD TO BULKHEAD PLATE)** | 1 |
| 14 | 54316 | ELBOW, BULKHEAD UNION 45DEG #16 | 2 |
| 15 | 10402 | BOLT - .375” X 1.25” | 4 |

# H200-00470 - SQUIRT BOOM PROCESSOR PIPING - MAIN BOOM (W450/W300 VALVE)
# MAIN VALVE TO BOOM

**NOTE: HYDRAULIC FITTINGS GET 545 LOCTITE™**

**NOTE: APPLY GREASE TO O-RINGS**

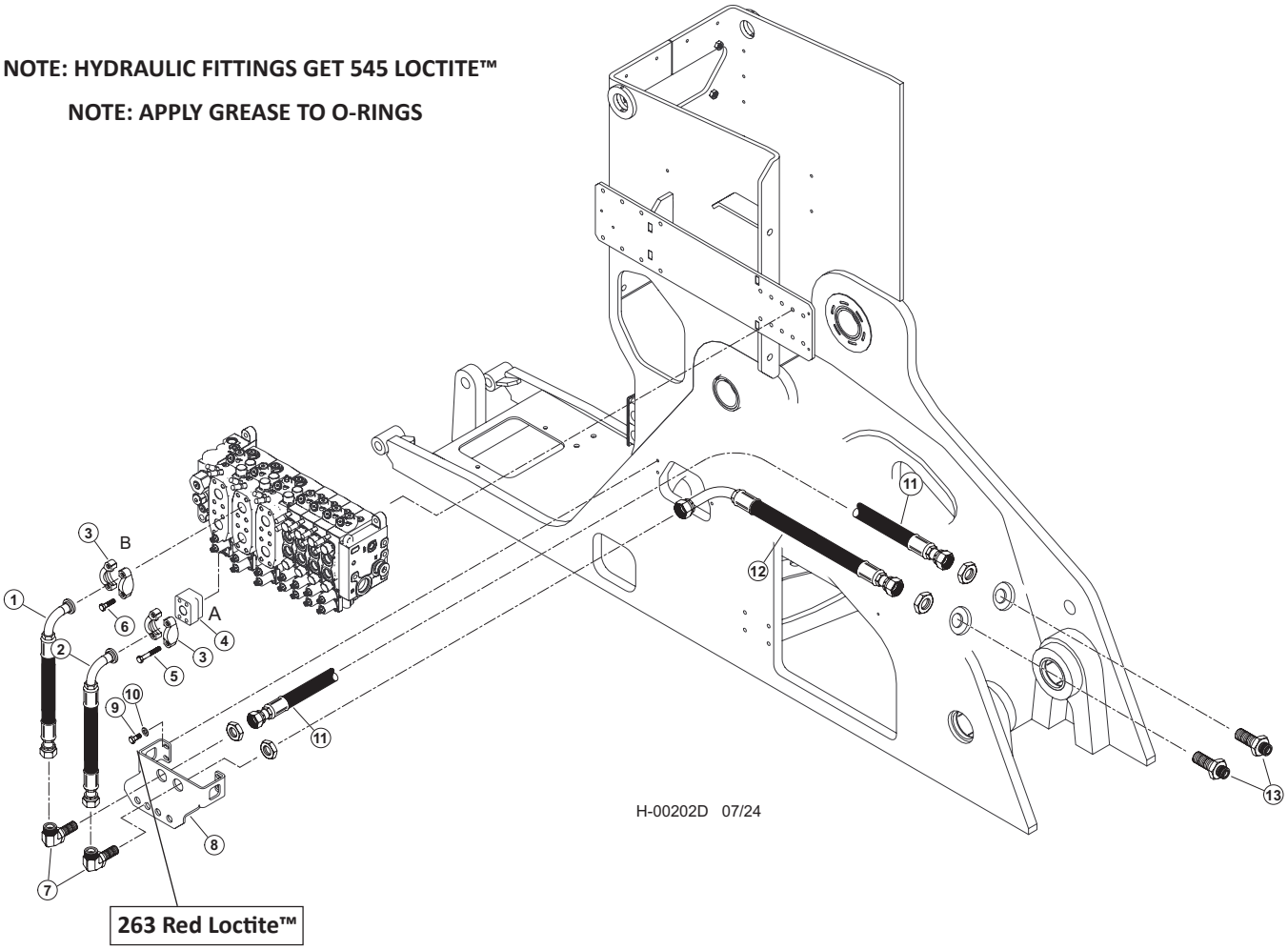


| Item | Part # | Description | Qty. |
|---|---|---|---|
| 1 | 65460 - (65812- KIT) | HOSE, HYD, 787TC36 16-16OS-20PH9-SW - **(BOOM "B")** | 1 |
| 2 | 65459 - (65812 - KIT) | HOSE, HYD, 787TC32 16-16OS-20PH9-SW - **(BOOM "A")** | 1 |
| 3 | 15111 | KIT, SPLIT FLANGE CODE 61 1 INCH | 2 |
| 4 | 65458 | ANCHOR-ASX-20GP STANDOFF | 2 |
| 5 | 55664 | BOLT, ALLEN HEAD - 10MM-1.5P X 80MM | 8 |
| 6 | 53680 | FITTING, BULKHEAD UNION ELBOW 16 WELO-WN | 4 |
| 7 | 60559 | BULHEAD, FRONT - TM | 2 |
| 8 | 10402 | BOLT - .375" X 1.25" | 2 |
| 9 | 15528 | WASHER, SAE FLAT - .375" **263 RED LOCTITE™** | 2 |
| 10 | 65803 - (65799 - KIT) | HOSE, HYD, 787TC43 16-16OS-16OS | 12 |
| | | **(MAIN BOOM CYLINDER BASE END BULKHEAD TO BULKHEAD PLATE)** | 1 |
| 11 | 65804 - (65799 - KIT) | HOSE, HYD, 787TC30 16-16OS-16O9L | |
| | | **(MAIN BOOM CYLINDER ROD END BULKHEAD TO BULKHEAD PLATE)** | 1 |
| 12 | 54316 | ELBOW, BULKHEAD UNION 45DEG #16 | 2 |

# H100-01230 - SQUIRT BOOM PROCESSOR PIPING - MAIN BOOM CYLINDER (BULKHEAD FITTING TO CYLINDER)

**NOTE: HYDRAULIC FITTINGS GET 545 LOCTITE™**

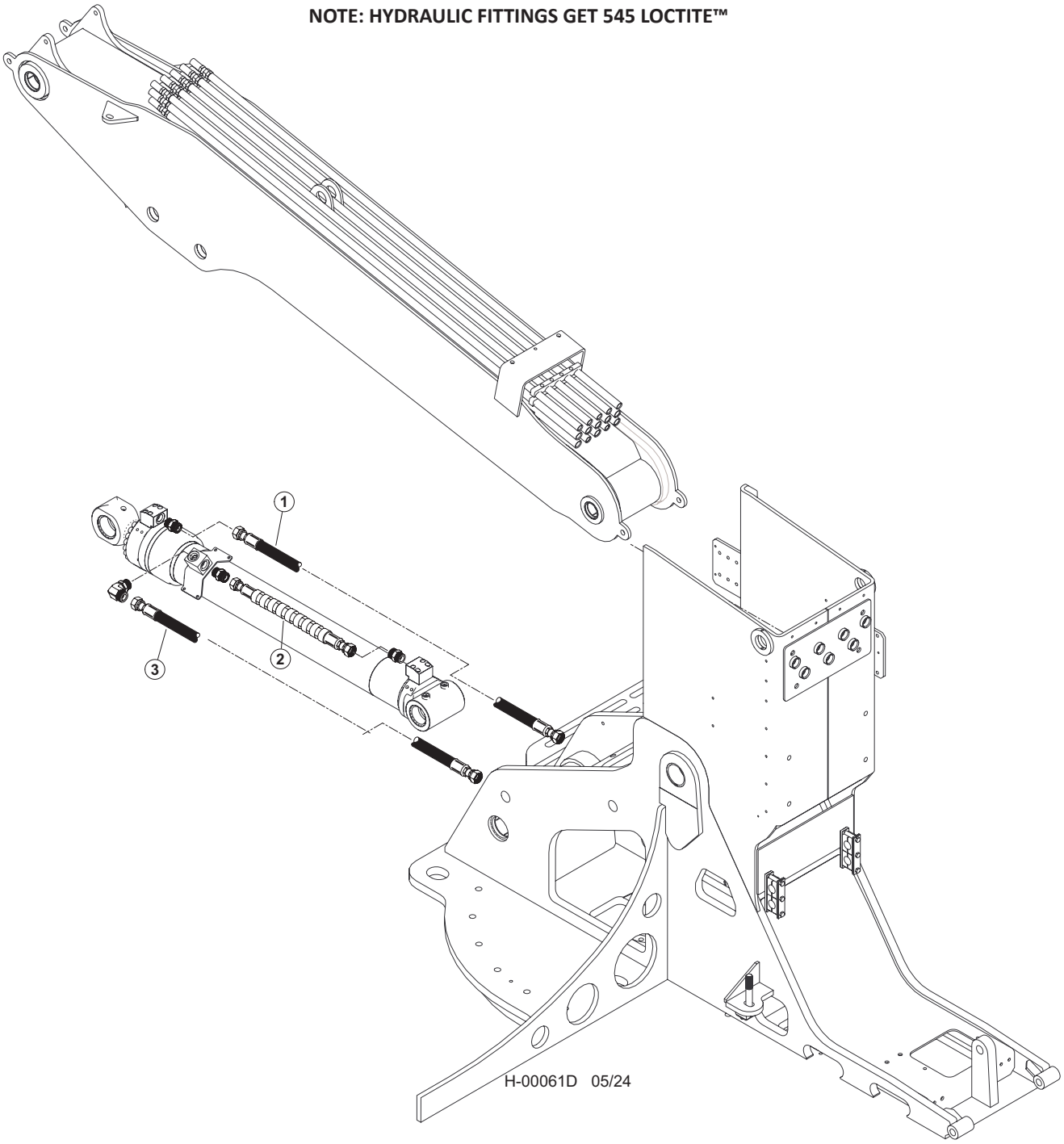


| Item | Part # | Description | Qty. |
|---|---|---|---|
| 1 | 65802 - (65799 -KIT) | HOSE, HYD, 787TC70 16-16OS-16OS - **(ROD END OF BOOM CYLINDER)** | 1 |
| 2 | 65800 - (65799 - KIT) | HOSE, HYD, 787TC45.5 16-16OS-16OS-SW - **(BASE END OF BOOM CYLINDER TO BLOCK)** | 1 |
| 3 | 65801 - (65799 - KIT) | HOSE, HYD, 787TC60 16-16OS-16OS - **(BASE END OF BOOM CYLINDER)** | 1 |

# H100-01240 - SQUIRT BOOM PROCESSOR PIPING - SQUIRT (K220/L90 VALVE)
# MAIN VALVE TO BOOM

**NOTE: HYDRAULIC FITTINGS GET 545 LOCTITE™**

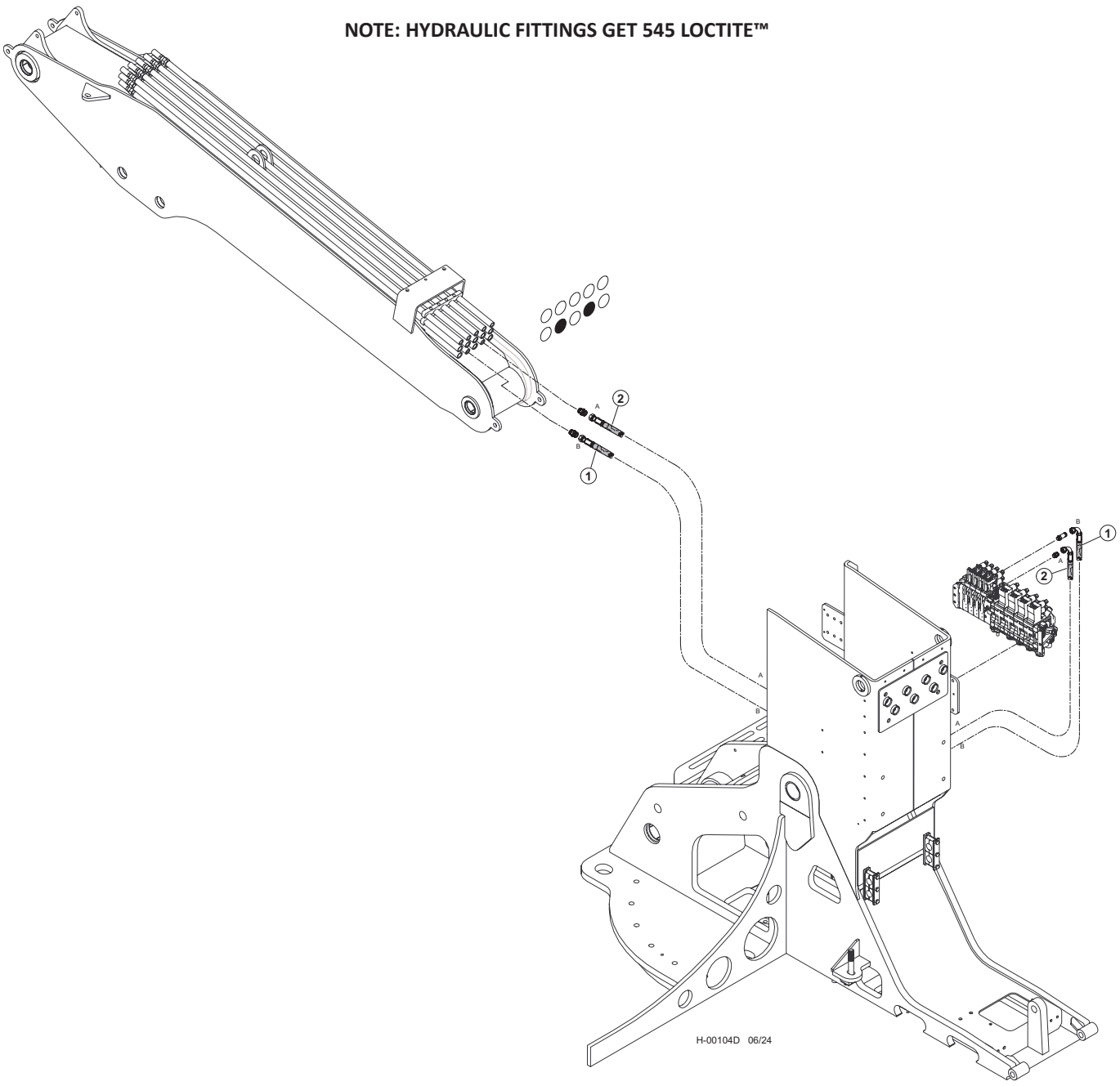


| Item | Part # | Description | Qty. |
|---|---|---|---|
| 1 | 55675 - (KIT) | HOSE ASSY - 722TC64 12-12OS-12O9-W - (ROTATE “B”) | 1 |
| 2 | 55675 - (KIT) | HOSE ASSY - 722TC65 12-12OS-12O9-W - (ROTATE “A”) | 1 |

# H200-00480 - SQUIRT BOOM PROCESSOR PIPING - SQUIRT (W450/W300 VALVE)
# MAIN VALVE TO BOOM

**NOTE: HYDRAULIC FITTINGS GET 545 LOCTITE™**

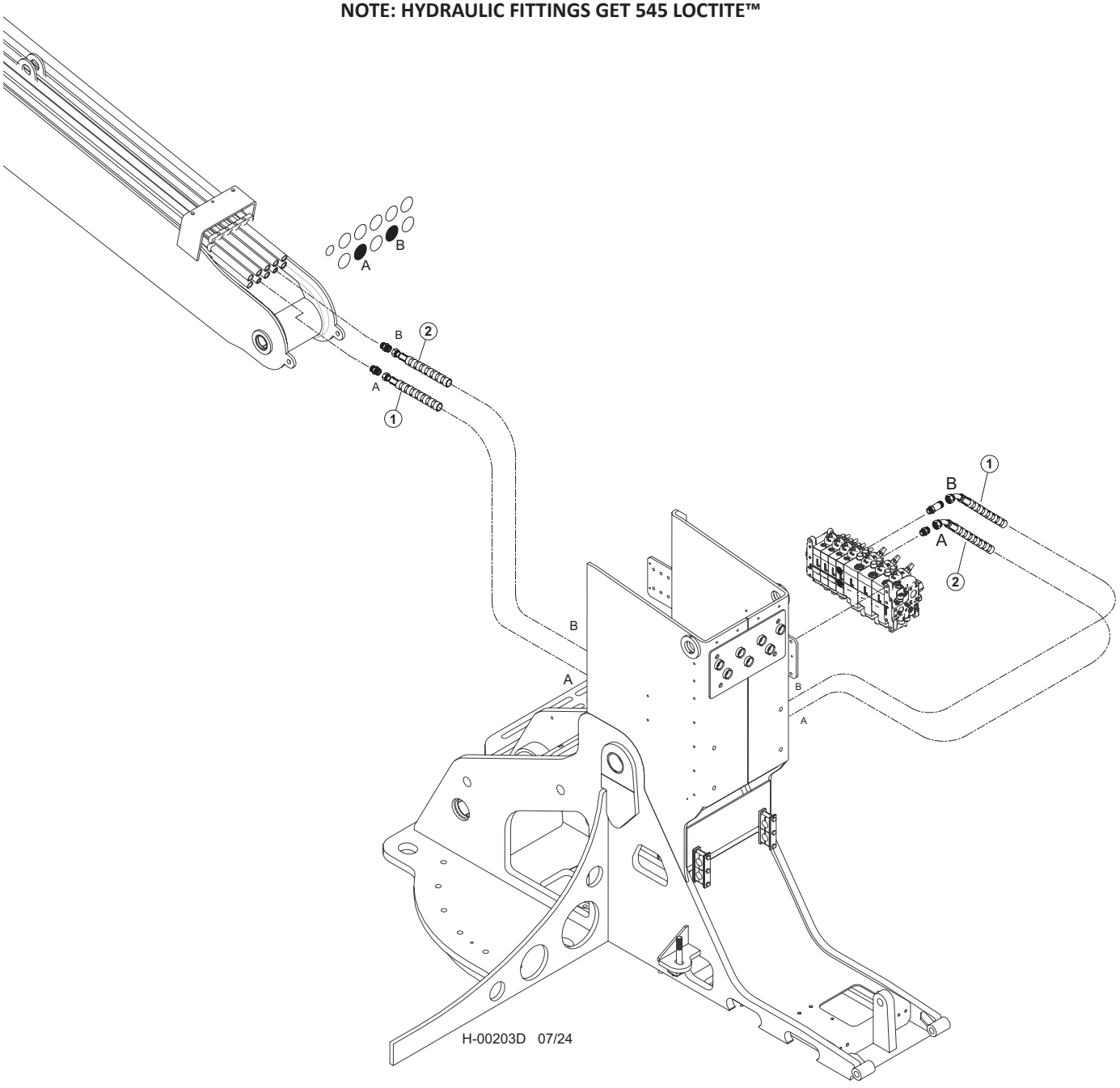


| Item | Part # | Description | Qty. |
|---|---|---|---|
| 1 | 66475 - (65990 - KIT) | HOSE, HYD, 722TC72 12-102OS-12O4-W **- (ROTATE "B")** | 1 |
| 2 | 66475 - (65990 - KIT) | HOSE, HYD, 722TC72 12-102OS-12O4-W **- (ROTATE "A")** | 1 |

# H100-01250 - SQUIRT BOOM PROCESSOR PIPING - ROTATE (K220/L90 VALVE)
# MAIN VALVE TO BOOM

**NOTE: HYDRAULIC FITTINGS GET 545 LOCTITE™**

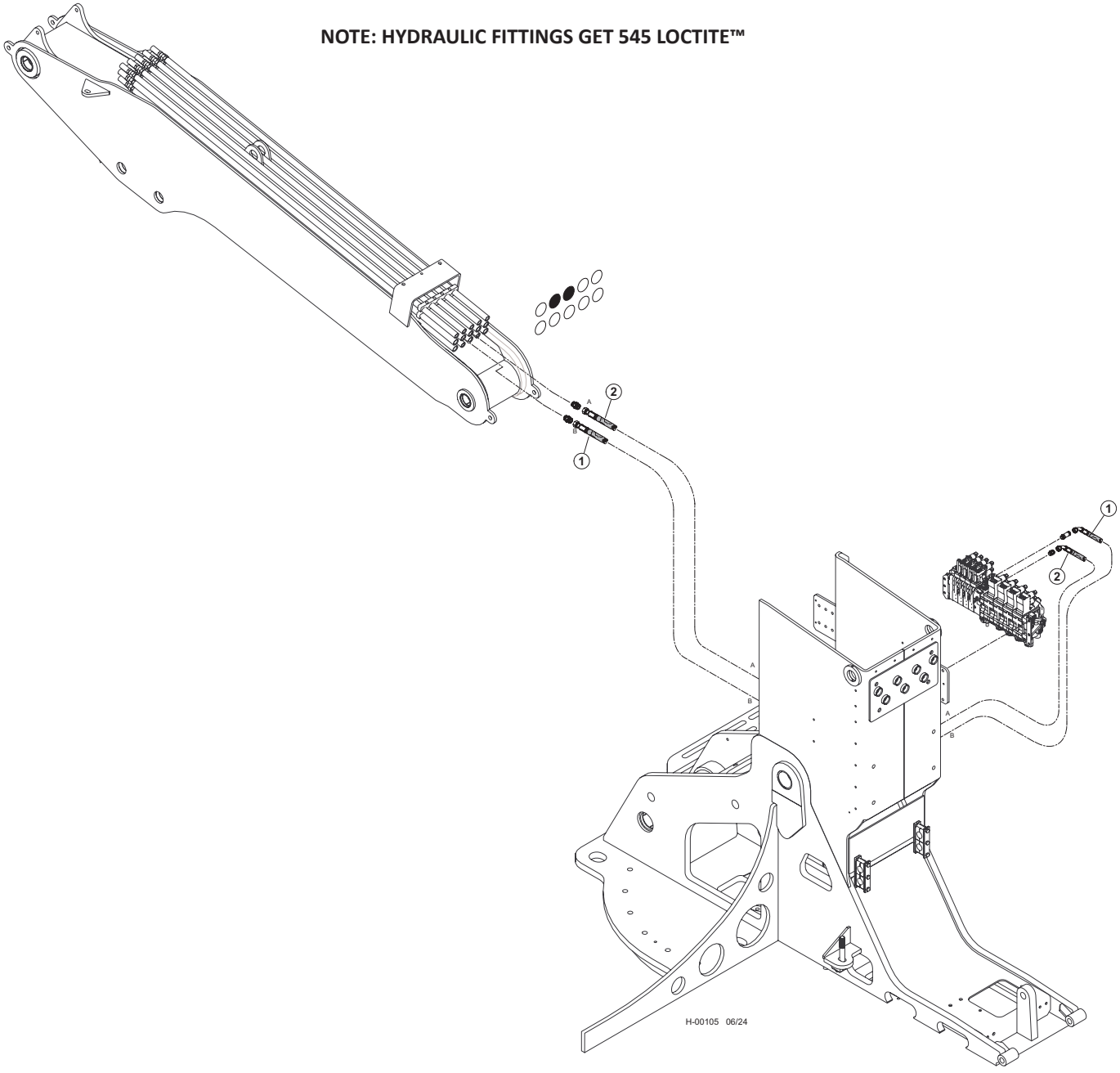


| Item | Part # | Description | Qty. |
|---|---|---|---|
| 1 | 55675 - (KIT) | HOSE ASSY - 722TC65 10-10OS-10O4-W - (ROTATE “B”) | 1 |
| 2 | 55675 - (KIT) | HOSE ASSY - 722TC64 10-10OS-10O4-W - (ROTATE “A”) | 1 |

# H200-00490 - SQUIRT BOOM PROCESSOR PIPING - ROTATE (W450/W300 VALVE)
# MAIN VALVE TO BOOM

**NOTE: HYDRAULIC FITTINGS GET 545 LOCTITE™**

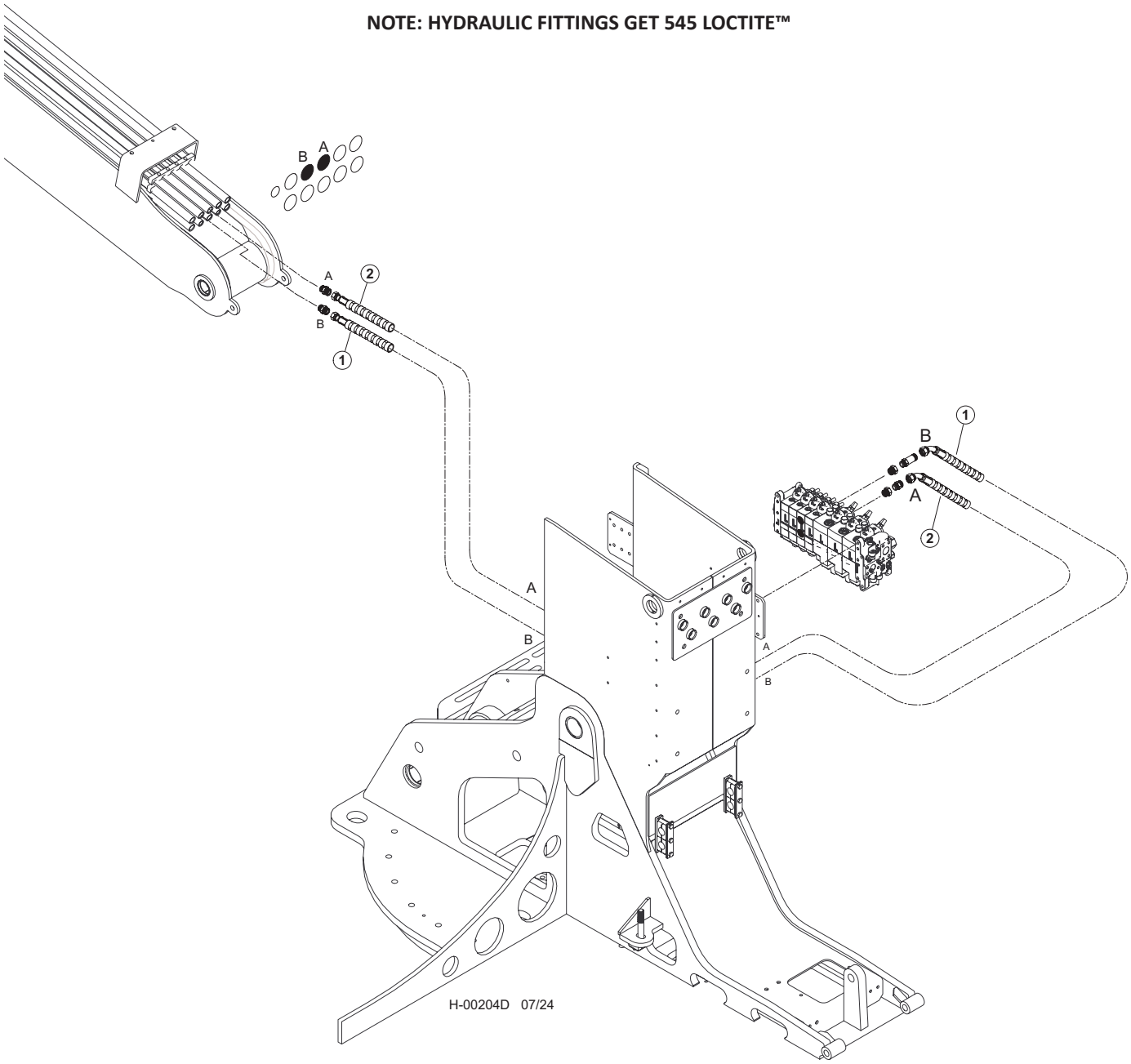


| Item | Part # | Description | Qty. |
|---|---|---|---|
| 1 | 66475 - (65990 - KIT) | HOSE, HYD, 722TC69 10-10OS-10O4-W - **(ROTATE "B")** | 1 |
| 2 | 66475 - (65990 - KIT) | HOSE, HYD, 722TC69 10-10OS-10O4-W - **(ROTATE "A")** | 1 |

# H100-01260 - SQUIRT BOOM PROCESSOR PIPING - CAB LEVEL (K220/L90 VALVE)
# MAIN VALVE TO BOOM

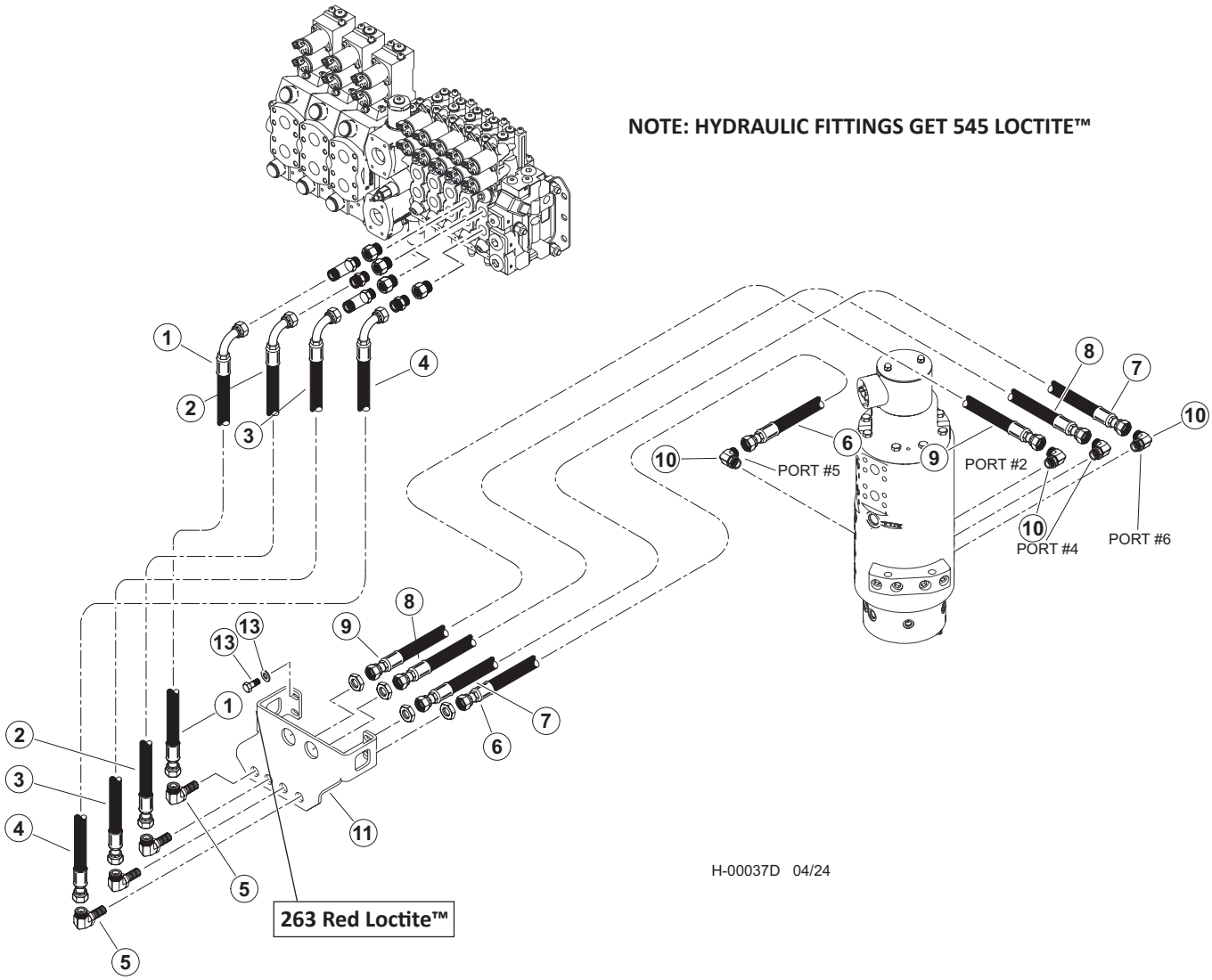


| Item | Part # | Description | Qty. |
|---|---|---|---|
| 1 | 57945 - (KIT) | HOSE ASSY - 787TC42 08-08OS-0809 - (VALVE PORT “B” TO BULKHEAD) | 1 |
| 2 | 57945 - (KIT) | HOSE ASSY - 787TC42 08-08OS-0809 - (VALVE PORT “B” TO BULKHEAD) | 1 |
| 3 | 57945 - (KIT) | HOSE ASSY - 787TC39 08-08OS-0809 - (VALVE PORT “A” TO BULKHEAD) | 1 |
| 4 | 57945 - (KIT) | HOSE ASSY - 787TC39 08-08OS-0809 - (VALVE PORT “A” TO BULKHEAD) | 1 |
| | 57947 | KIT, FITTING TRACK LEVEL-D SERIES | 1 |
| 5 | 24187 | ELBOW, 90 BULKHEAD - 855BH-TT-08 | 4 |
| 6 | 57945 - (KIT) | HOSE ASSY - 787TC30 08-08OS-080S - (BULKHEAD TO PORT #5 ON ROT MAN) | 1 |
| 7 | 57945 - (KIT) | HOSE ASSY - 787TC40 08-08OS-080S - (BULKHEAD TO PORT #6 ON ROT MAN) | 1 |
| 8 | 57945 - (KIT) | HOSE ASSY - 787TC41.5 08-08OS-080S - (BULKHEAD TO PORT #4 ON ROT MAN) | 1 |
| 9 | 57945 - (KIT) | HOSE ASSY - 787TC44 08-08OS-080S - (BULKHEAD TO PORT #2 ON ROT MAN) | 1 |
| 10 | 16360 | ELBOW, 90 - FF1868T-0808S | 4 |
| 11 | 60559 | BULHEAD, FRONT - TM | 1 |
| 12 | 15542 | BOLT - .375” X .75” | 2 |
| 13 | 15528 | WASHER, SAE FLAT - .375” OR 3/8” **263 RED LOCTITE™** | 2 |

# H200-00500 - SQUIRT BOOM PROCESSOR PIPING - CAB LEVEL (W450/W300 VALVE)
# MAIN VALVE TO BOOM

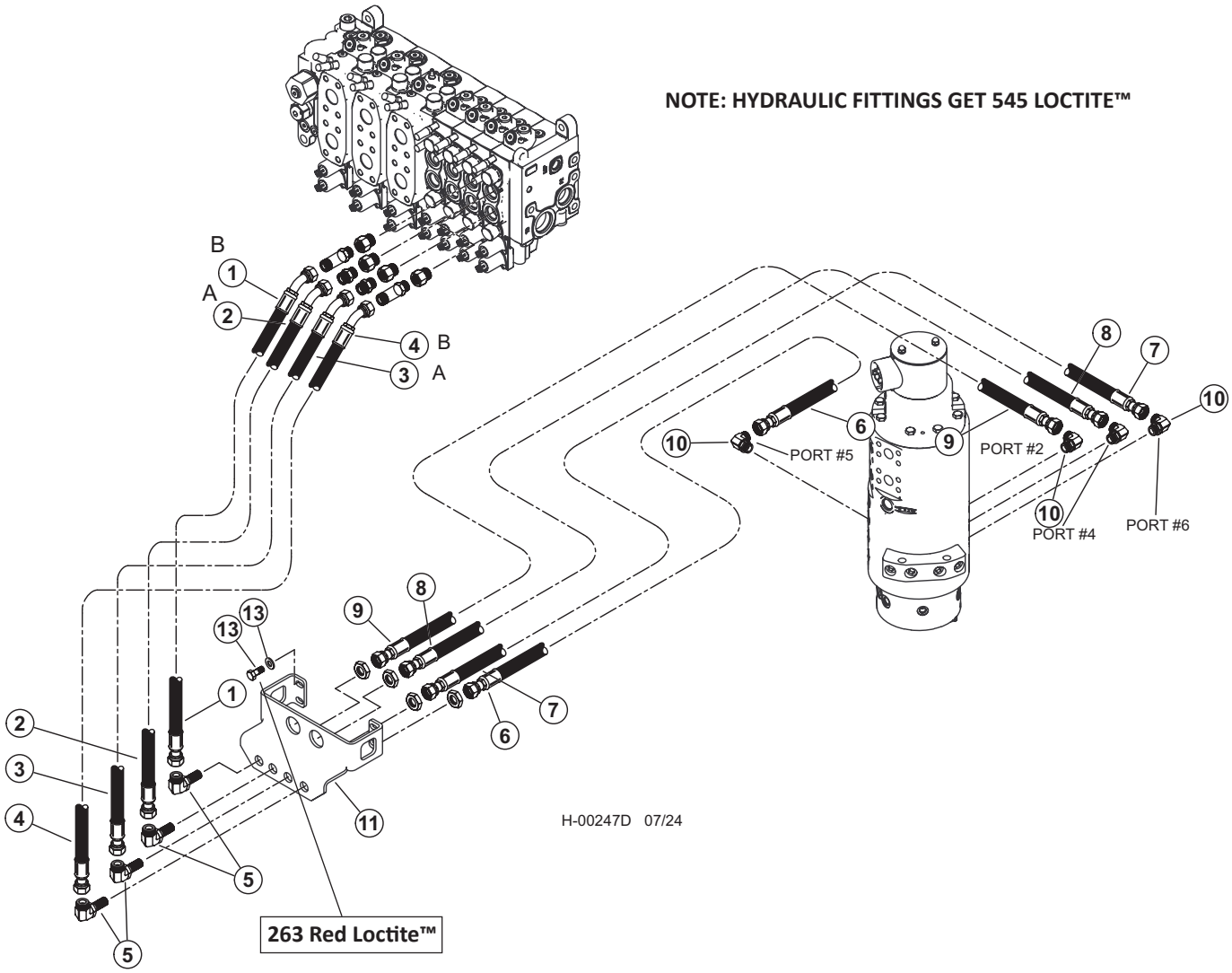


| Item | Part # | Description | Qty. |
|---|---|---|---|
| 1 | 65460 - (65812 - KIT) | HOSE, HYD, 787TC36 16-16OS-20PH9-SW - **(VALVE PORT "B" TO BULKHEAD)** | 1 |
| 2 | 65460 - (65812 - KIT) | HOSE, HYD, 787TC36 16-16OS-20PH9-SW - **(VALVE PORT "B" TO BULKHEAD)** | 1 |
| 3 | 65459 - (65812 - KIT) | HOSE, HYD, 787TC32 16-16OS-20PH9-SW - **(VALVE PORT "A" TO BULKHEAD)** | 1 |
| 4 | 65620 - (65619 - KIT) | HOSE, HYD, 787TC32 16-16OS-20PH9-SW - **(VALVE PORT "A" TO BULKHEAD)** | 1 |
| | 57947 | KIT, FITTING TRACK LEVEL-D SERIES | 1 |
| 5 | 24187 | ELBOW, 90 BULKHEAD - 855BH-TT-08 | 4 |
| 6 | 65892 - (65891 - KIT) | HOSE ASSY - 787TC30 08-08OS-080S - **(BULKHEAD TO PORT #5 ON ROT MAN)** | 1 |
| 7 | 65893 - (65891 - KIT) | HOSE ASSY - 787TC40 08-08OS-080S - **(BULKHEAD TO PORT #6 ON ROT MAN)** | 1 |
| 8 | 65894 - (65891 - KIT) | HOSE ASSY - 787TC41.5 08-08OS-080S - **(BULKHEAD TO PORT #4 ON ROT MAN)** | 1 |
| 9 | 65895 - (65891 - KIT) | HOSE ASSY - 787TC44 08-08OS-080S - **(BULKHEAD TO PORT #2 ON ROT MAN)** | 1 |
| 10 | 16360 | ELBOW, 90 - FF1868T-0808S | 4 |
| 11 | 60559 | BULHEAD, FRONT - TM | 1 |
| 12 | 15542 | BOLT - .375" X .75" | 2 |
| 13 | 15528 | WASHER, SAE FLAT - .375" OR 3/8" **263 RED LOCTITE™** | 2 |

# H100-01270 - SQUIRT BOOM PROCESSOR PIPING - LIGHT WIRE (MAIN BOOM TO STICK BOOM)

**NOTE: HYDRAULIC FITTINGS GET 545 LOCTITE™**

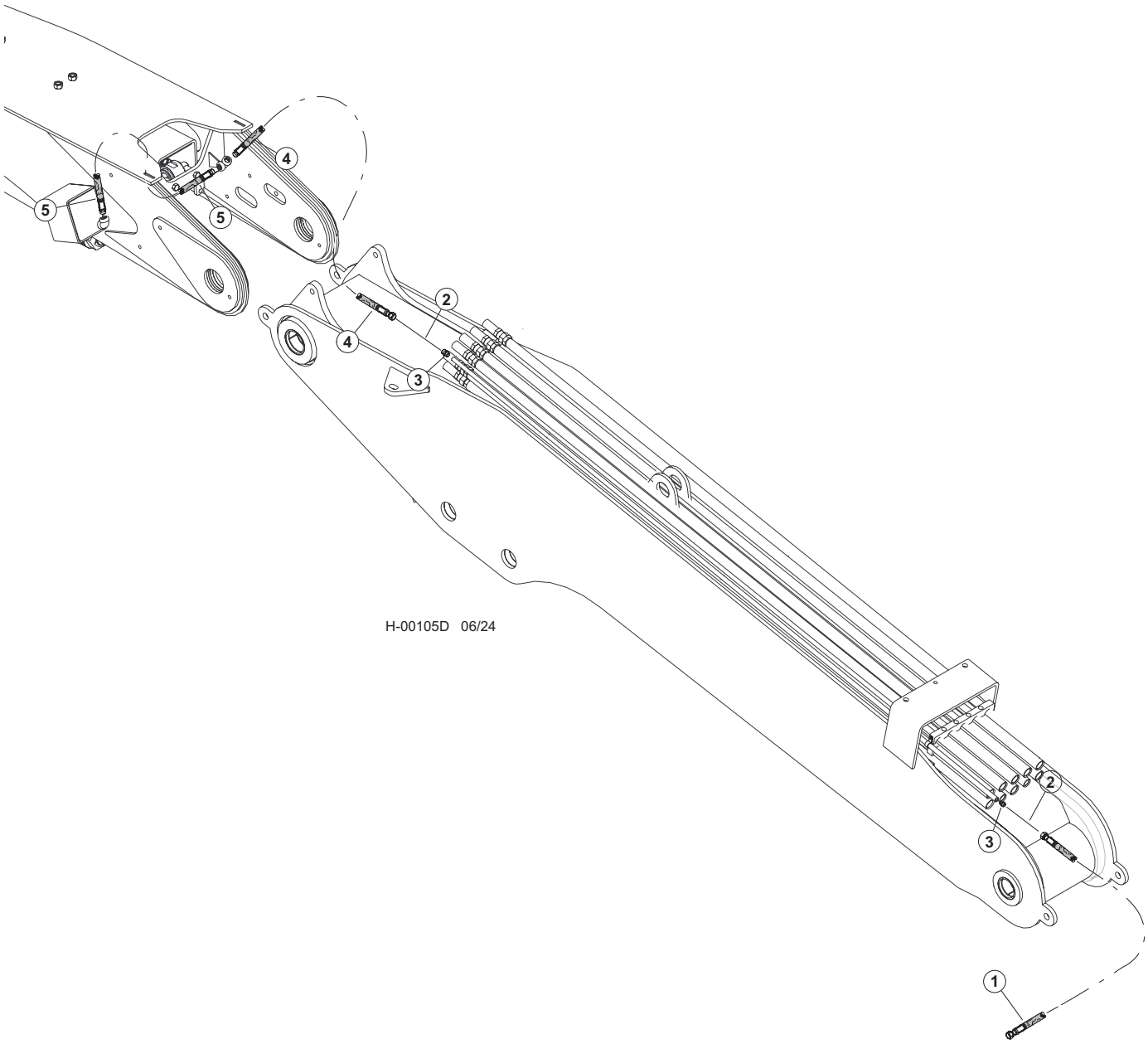


| Item | Part # | Description | Qty. |
|---|---|---|---|
| 1 | 665150 | HOSE, HYD, 387TC64 06-06OS-08PS-SW - **LIGHT WIRE - BASE OF MAIN BOOM)** | 1 |
| 2 | HG12051 | LIGHT WIRE | AR |
| 3 | 51878 | CONNECTOR, STR - MALE PIPE (6-6 FLO-S) | 2 |
| 4 | 665150 - (665080 - KIT) | HOSE, HYD, 387TC64 06-06OS-08PS-SW - **(MAIN BOOM TO SQUIRT BOOM)** | 1 |
| 5 | 665180 - (665090 - KIT) | HOSE, HYD, 387TC34 08-08MP-08PS-W - **(LIGHT JUMPER HOSE)** | 1 |

# H100-01280 - SQUIRT BOOM PROCESSOR PIPING - STICK BOOM (MAIN BOOM TO STICK CYLINDER)

**NOTE: HYDRAULIC FITTINGS GET 545 LOCTITE™**

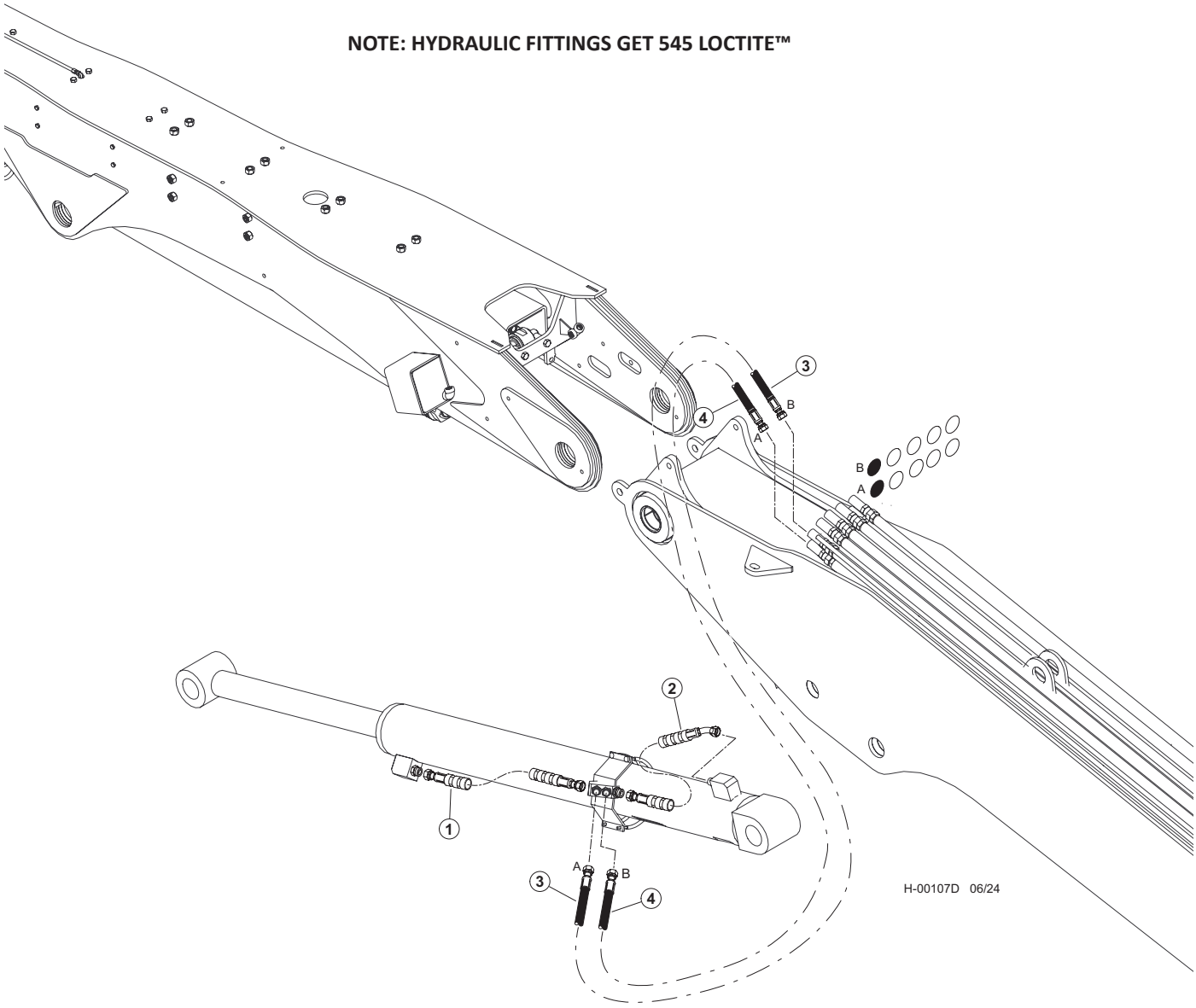


| Item | Part # | Description | Qty. |
|---|---|---|---|
| 1 | 65855 | HOSE ASSY - 722TC38 16-16OS-16OS-SW - **(STICK CYLINDER ROD - "A")** | 1 |
| 2 | 65853 | HOSE ASSY - 722TC17 16-16OS-16O4-SW - **(STICK CYLINDER BASE - "B")** | 1 |
| 3 | 65848 - (665080 - KIT) | HOSE, HYD, 787TC79 16-16OS-16OS - **(STICK CYLINDER ROD - "A")** | 1 |
| 4 | 65849 - (665080 - KIT) | HOSE, HYD, 787TC81 16-16OS-16OS - **(STICK CYLINDER BASE - "B")** | 1 |

# H100-01290 - SQUIRT BOOM PROCESSOR PIPING - BOOM SQUIRT (MAIN BOOM TO CYLINDER)

**NOTE: HYDRAULIC FITTINGS GET 545 LOCTITE™**

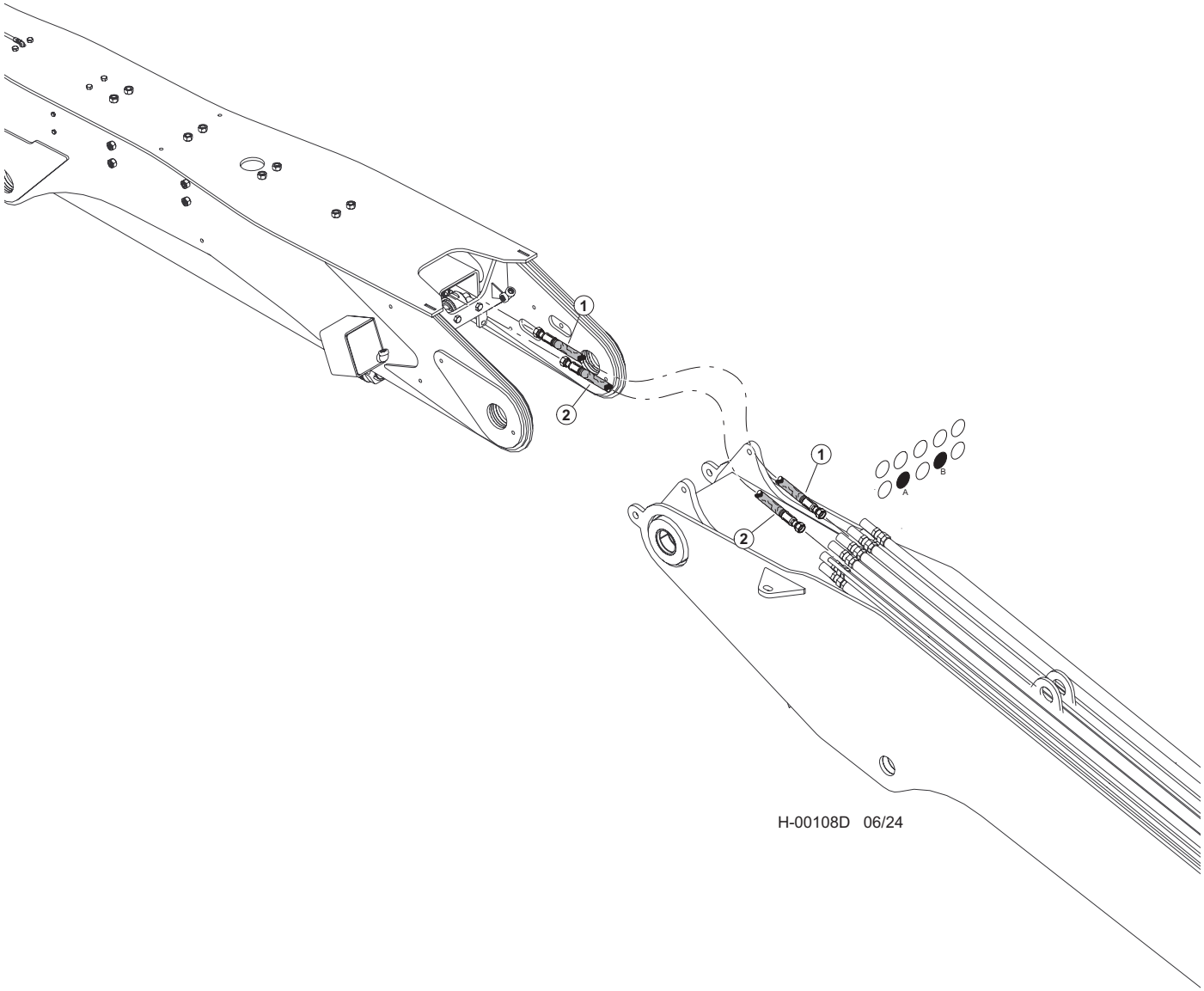


| Item | Part # | Description | Qty. |
|---|---|---|---|
| 1 | 665080 - 55675 - KIT) | HOSE, HYD, 722TC59 16-16OS-16OS-W - **(SQUIRT CYLINDER "A")** | 1 |
| 2 | 665140 - 55675 - KIT) | HOSE, HYD, 722TC60 16-16OS-16OS-W - **(SQUIRT CYLINDER "B")** | 1 |

# H100-01300 - SQUIRT BOOM PROCESSOR PIPING - ROTATE (MAIN BOOM TO STICK BOOM)

**NOTE: HYDRAULIC FITTINGS GET 545 LOCTITE™**

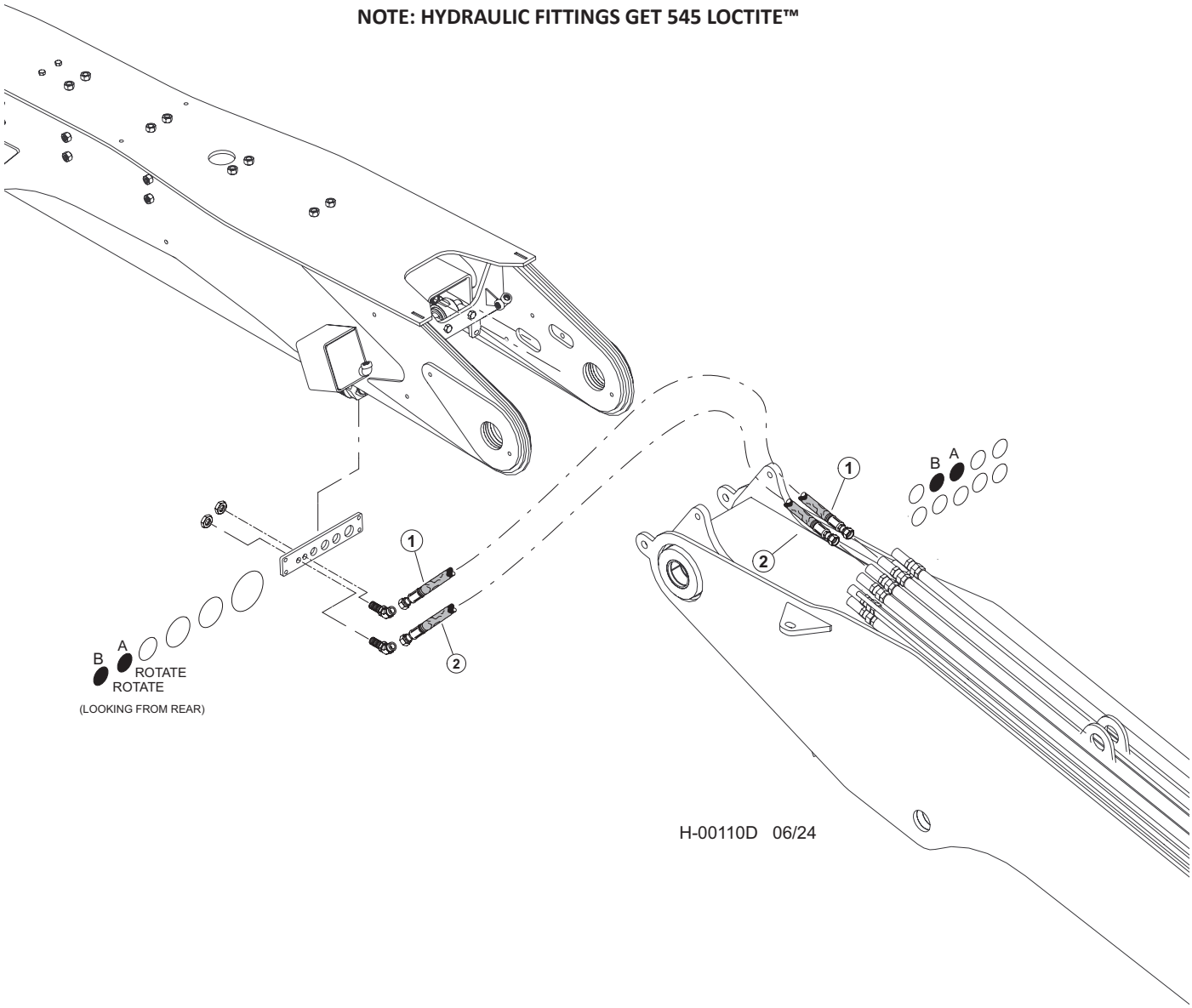


| Item | Part # | Description | Qty. |
|---|---|---|---|
| 1 | 665110 - (665080 - KIT) | HOSE, HYD, 722TC67 10-10OS-10OS-W - **(ROTATE "A")** | 1 |
| 2 | 665110 - (665080 - KIT) | HOSE, HYD, 722TC67 10-10OS-10OS-W - **(ROTATE "B")** | 1 |

# H100-01310 - SQUIRT BOOM PROCESSOR PIPING - PRESSURE & RETURN (MAIN BOOM TO STICK BOOM)

**NOTE: HYDRAULIC FITTINGS GET 545 LOCTITE™**

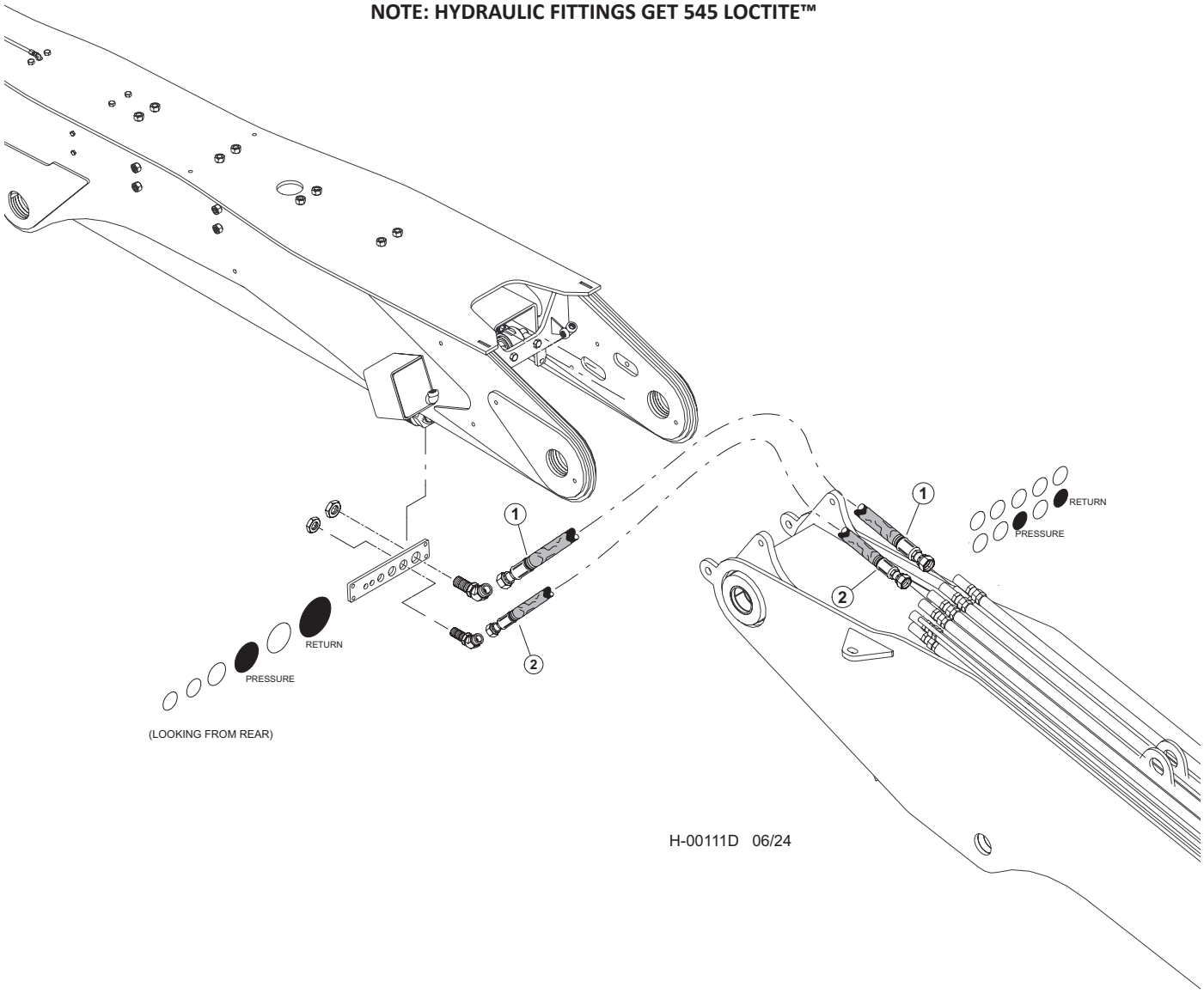


| Item | Part # | Description | Qty. |
|---|---|---|---|
| 1 | 665170 - (665080 - KIT) | HOSE, HYD, 722TC64 20-20OS-20OS-W - **(RETURN)** | 1 |
| 2 | 665100 - (665080 - KIT) | HOSE, HYD, 787TC64 16-16OS-16OS-W - **(PRESSURE)** | 1 |

# H100-01320 - SQUIRT BOOM PROCESSOR PIPING - CASE DRAIN & ATTACHMENT ELEC. (MAIN BOOM TO STICK BOOM)

**NOTE: HYDRAULIC FITTINGS GET 545 LOCTITE™**

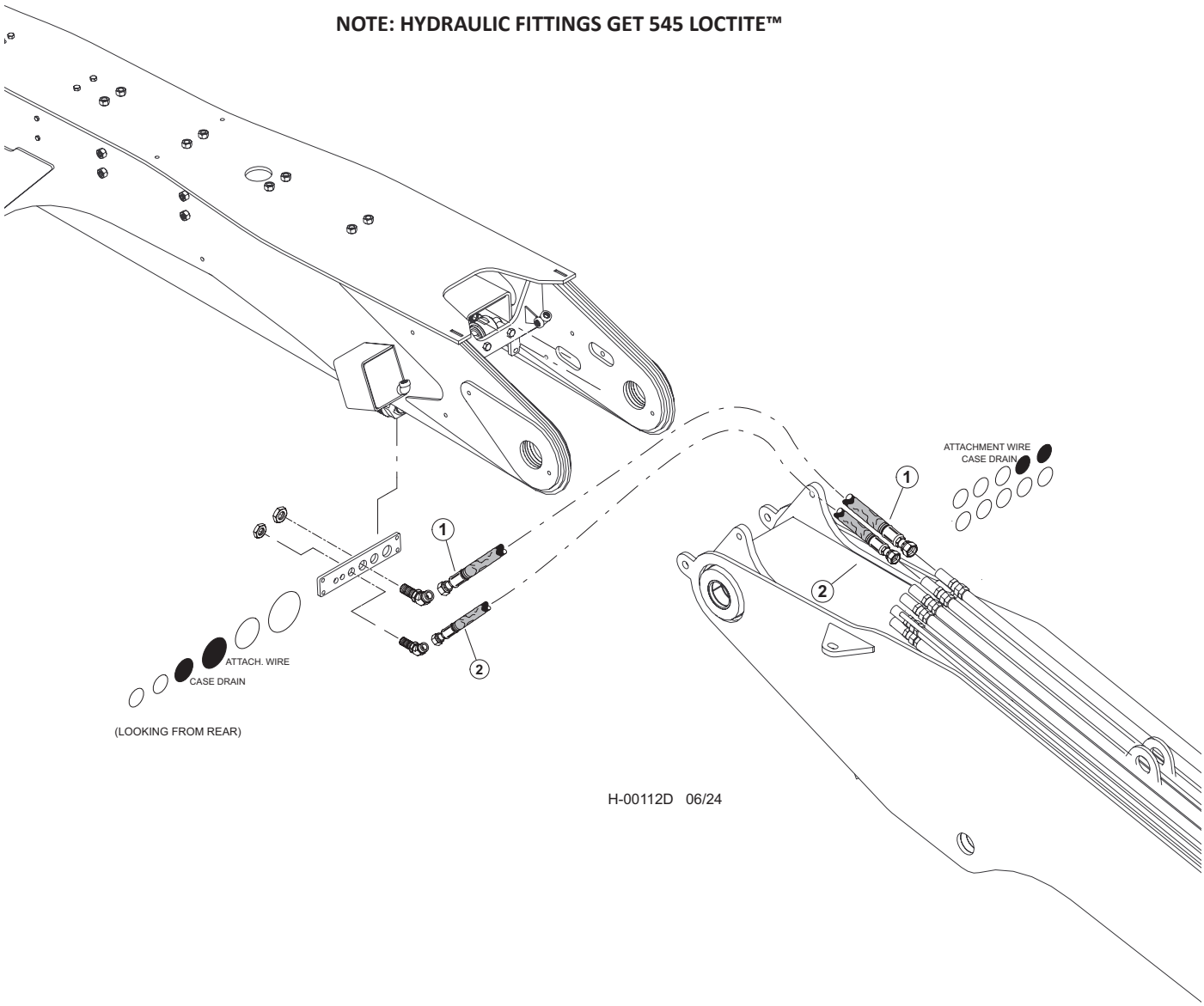


| Item | Part # | Description | Qty. |
|---|---|---|---|
| 1 | 665160 - (665080 - KIT) | HOSE, HYD, 387TC65 16-16OS-16OS-W - **(ATTACHMENT WIRE)** | 1 |
| 2 | 665120 - (665080 - KIT) | HOSE, HYD, 722TC67 12-12OS-12OS-W - **(CASE DRAIN)** | 1 |

# H100-01330 - SQUIRT BOOM PROCESSOR PIPING - GREASE HOSES (MAIN BOOM TO STICK BOOM

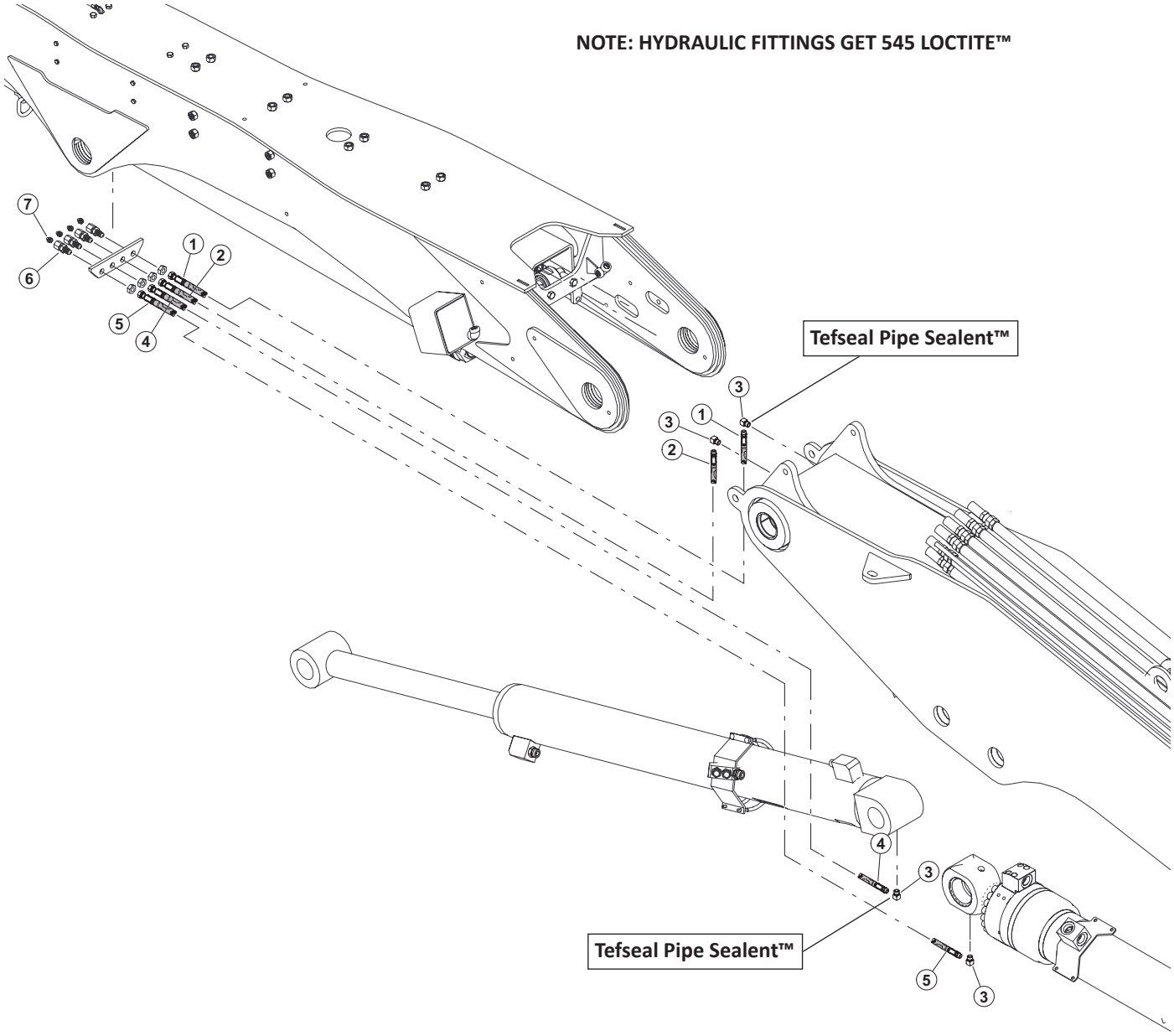


H-00113D 06/24

| Item | Part # | Description | Qty. |
|---|---|---|---|
| 1 | 665240 - (665090 - KIT) | HOSE, HYD, HLBD76-02-02PS-04JS-WS100 **- (MAIN BOOM TO BULKHEAD)** | 1 |
| 2 | 665240 - (665090 - KIT) | HOSE, HYD, HLBD76-02-02PS-04JS **- (MAIN BOOM TO BULKHEAD)** | 1 |
| 3 | 22281 | ELBOW, 1/8-27 NPTF(M), 1/8-17 NPTF(F),90 **TEFSEAL PIPE SEALENT™** | 4 |
| 4 | 665260 - (665090 - KIT) | HOSE, HYD, HLBD128-02-02PS-04JS-WS100 **- (STICK CYL. BASE TO BULKHEAD)** | 1 |
| 5 | 665270 - (665090 - KIT) | HOSE, HYD, HLBD136-02-02PS-04JS **- (MAIN CYL. ROD TO BULKHEAD)** | 1 |
| 6 | 15658 | CONNECTOR, STR BULKHEAD - 2239-2-4S | 4 |
| 7 | 10704 | FITTING, GREASE - .125 NPT - STR | 4 |

# H100-01340 - IMPLEMENT PUMP - 145CC

**NOTE: APPLY GREASE TO O-RINGS**

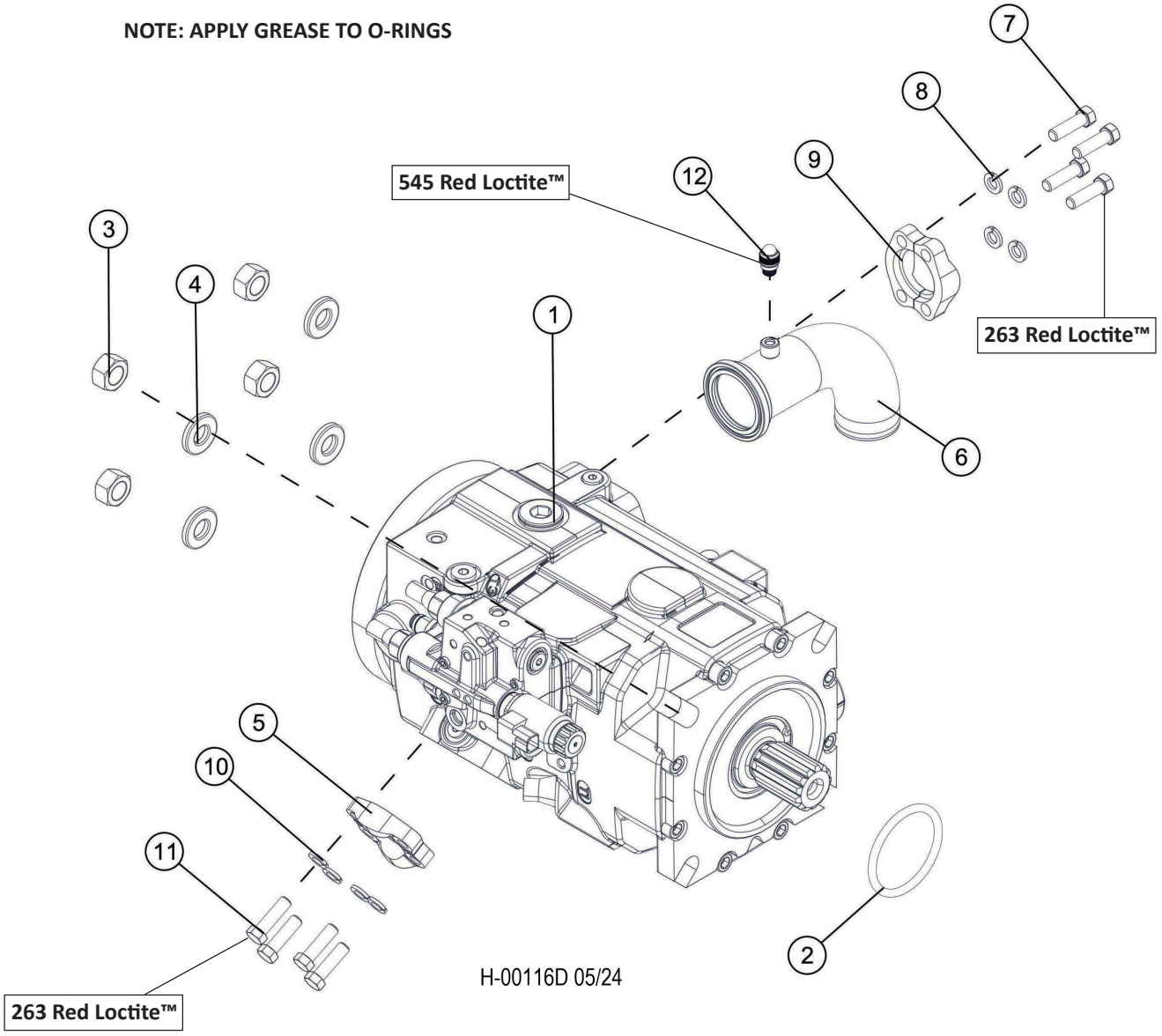


| Item | Part # | Description | Qty. |
|---|---|---|---|
| 1 | 57661 | PUMP, IMPLEMENT - REX 145CC/40 | 1 |
| 2 | 15442-2 | O-RING, PUMP DRIVE PILOT - DRIVE | 1 |
| 3 | 10776 | NUT, HEX - .75” | 4 |
| 4 | 15550 | WASHER, SAE FLAT - .75” | 4 |
| 5 | 15114 | KIT, SPLIT FLANGE - 1.25” (CODE 62) | 1 |
| 6 | 46265 | TUBE, SUCTION - IMP PUMP / C SERIES | 1 |
| 7 | 58378 | BOLT - 5/8-11 X 1 3/4” HEX HEAD **263 RED LOCTITE™** | 4 |
| 8 | 10771 | WASHER, SAE FLAT - .625” | 4 |
| 9 | 22639 | KIT, SPLIT FLANGE - 3” (CODE 61)(METRIC) | 1 |
| 10 | 10710 | WASHER, LOCK - .5” | 4 |
| 11 | 10736 | BOLT - .5” X 2” **263 RED LOCTITE™** | 4 |
| 12 | 57820 | TAP, GAUGE PORT # 6 SAE - ORING-BOSS **545 RED LOCTITE™** | 1 |

# H100-01350 - IMPLEMENT PUMP - 145CC

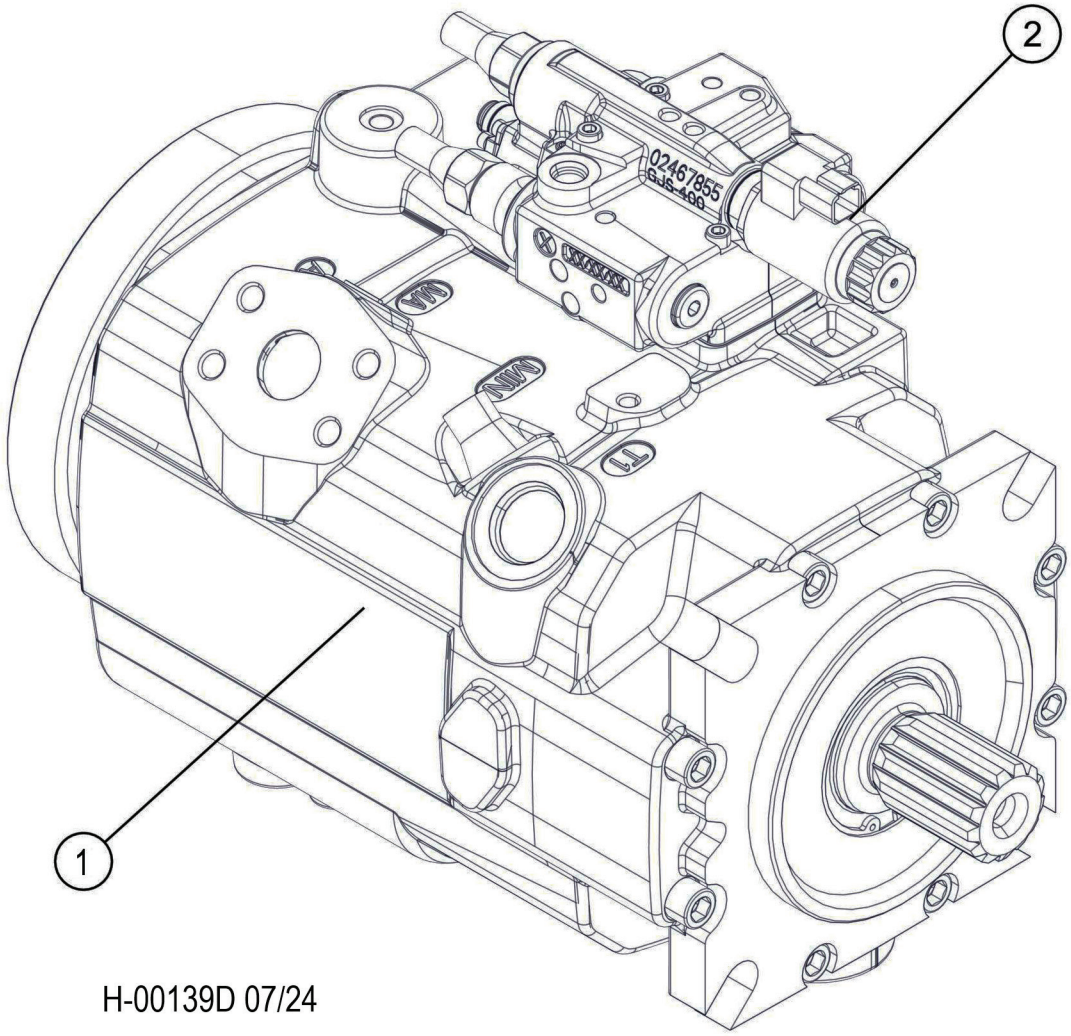


| Item | Part # | Description | Qty. |
|---|---|---|---|
| 1 | 57661 | PUMP, IMPLEMENT - REX 145CC/40 | 1 |
| 2 | 53730 | SOLENOID COIL | 1 |
| * | 58256 | O-RING TO SEAL AUX. PUMP - GREEN HIGH TEMP | 1 |
| * | 58292 | DRIVE, THRU - 125cc HYRDO BRUSH PUMP - D | 1 |
| * | R909152493 | GREEN O-RING | 1 |
| * | R902569653 | SEAL KIT | |

***MEANS NOT SHOWN**

# H100-01351 - IMPLEMENT PUMP - 145CC

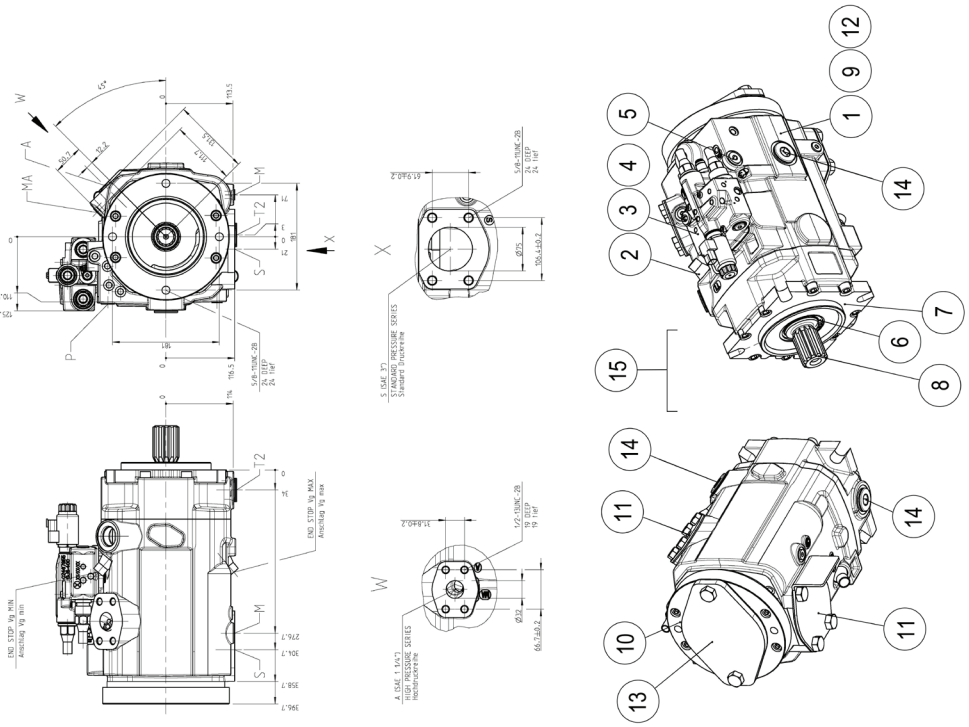

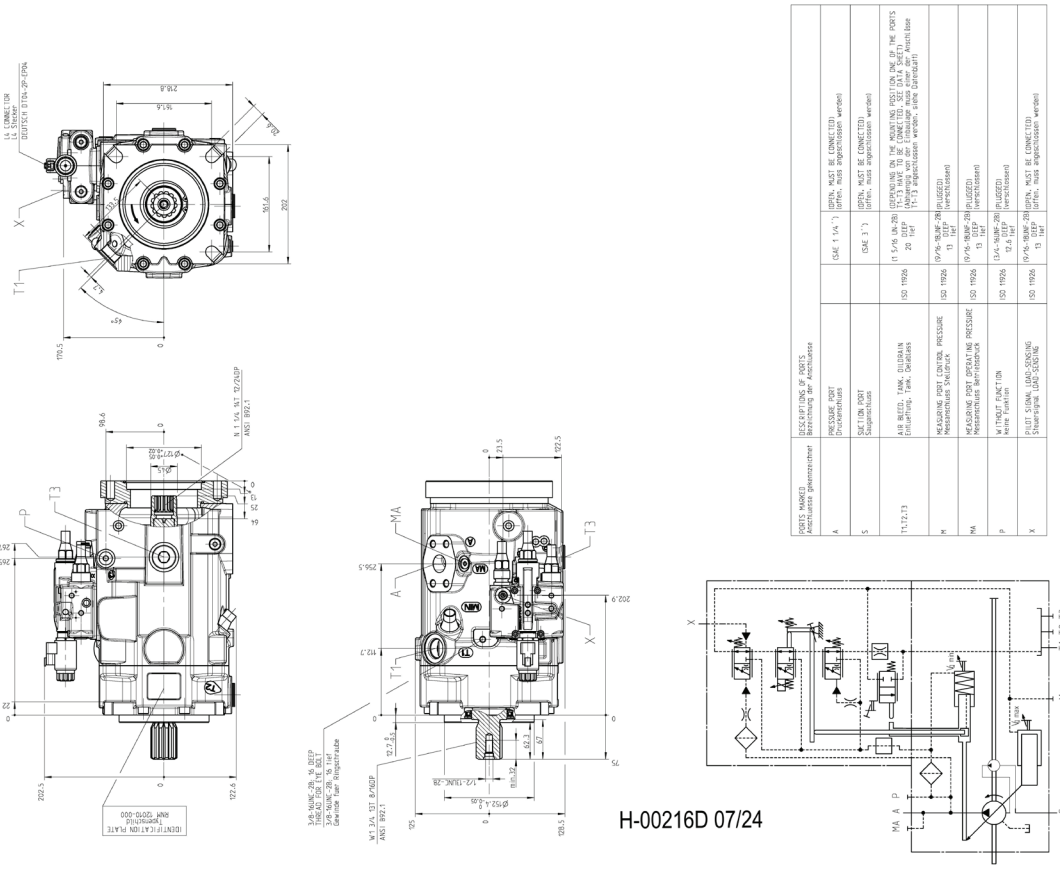

| PORTS MARKED<br>Anschlüsse gekennzeichnet | DESCRIPTION OF PORTS<br>Bezeichnung der Anschlüsse | | | |
|---|---|---|---|---|
| A | PRESSURE PORT<br>Druckanschluss | (SAE 1 1/4 ") | (OPEN, MUST BE CONNECTED)<br>(offen, muss angeschlossen werden) | |
| S | SUCTION PORT<br>Sauganschluss | (SAE 3 ") | (OPEN, MUST BE CONNECTED)<br>(offen, muss angeschlossen werden) | |
| T1,T2,T3 | AIR BLEED, TANK, DRAIN<br>Entlüftung, Tank, Drainage | (1 5/16 UN-2B)<br>20 DEEP<br>20 ref | (DEPENDING ON THE MOUNTING POSITION ONE OF THE PORTS T1, T2 OR T3 HAVE TO BE CONNECTED TO TANK)<br>(Anhängig von der Einbaulage muss einer der Anschlüsse T1-T3 angeschlossen werden, siehe Zeichnung) | |
| M | MEASURING PORT CONTROL PRESSURE<br>Messanschluss Steuerdruck | ISO 11926 | (9/16-18UNF-2B) PLUGGED)<br>13 DEEP<br>13 ref<br>(verschlossen) | |
| MA | MEASURING PORT OPERATING PRESSURE<br>Messanschluss Betriebsdruck | ISO 11926 | (9/16-18UNF-2B) PLUGGED)<br>13 DEEP<br>13 ref<br>(verschlossen) | |
| P | MATCHBOT FUNCTION<br>keine Funktion | ISO 11926 | (3/4-16UNF-2B) PLUGGED)<br>12,6 DEEP<br>14 ref<br>(verschlossen) | |
| X | PILOT SIGNAL LOAD-SENSING<br>Steuerdruck Load-Sensing | ISO 11926 | (9/16-18UNF-2B) (OPEN, MUST BE CONNECTED)<br>13 DEEP<br>13 ref<br>(offen, muss angeschlossen werden) | |



H-00216D 07/24

# H100-01351 - IMPLEMENT PUMP - 145CC

| Item | Part # | Description | Qty. |
|---|---|---|---|
| 1 | R902579633 | HOUSING | 1 |
| 2 | R902578803 | CONTROL | 1 |
| 3 | R902543515 | CONTROL VALVE | 1 |
| 4 | R902559826 | RETURN GUIDE | 1 |
| 5 | R902511576 | FILTER ELEMENT | 1 |
| 6 | 58286 | SEAL, SHAFT - REXTOTH 145CC | 1 |
| 7 | R902579676 | BEARING FLANGE | 1 |
| 8 | 65144 | DRIVE SHAFT | 1 |
| 9 | R902563624 | ROTARY GROUP | 1 |
| 10 | R902553159 | BELL HOUSING | 1 |
| 11 | R902581237 | FLANGE COVER | 1 |
| 12 | R902531102 | WHEEL | 1 |
| 13 | R902602980 | FLANGE COVER | 1 |
| 14 | R902601857 | SCREW PLUG | 3 |
| 15 | R902569652 | SEAL KIT | 1 |

# H100-01352 - IMPLEMENT PUMP - 145CC

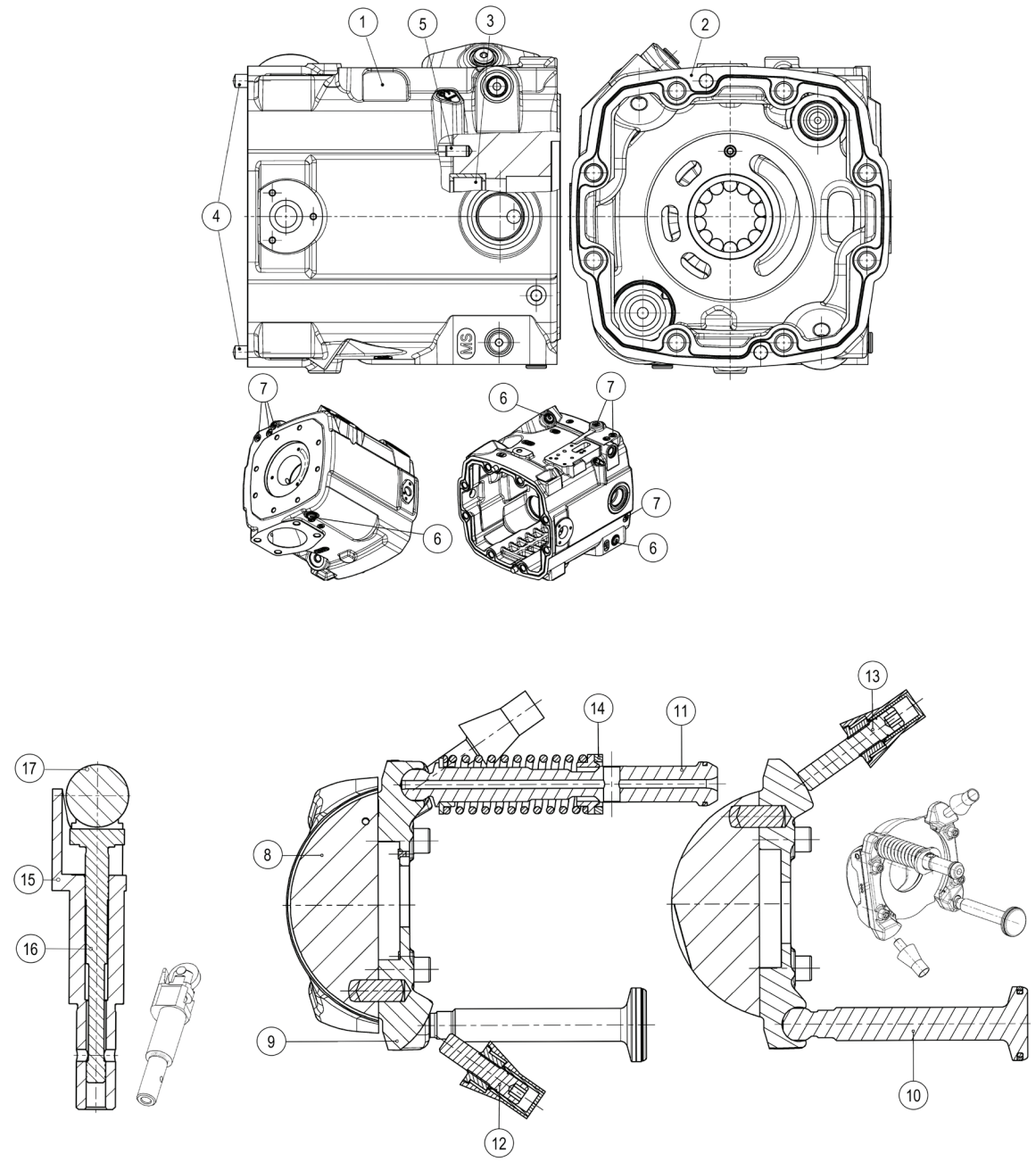


H-00221D 04/24

# H100-01352 - IMPLEMENT PUMP - 145CC

| Item | Part # | Description | Qty. |
|---|---|---|---|
| 1 | R902563818 | HOUSING | 1 |
| 2 | R902483936 | FLAT GASKET | 1 |
| 3 | R902581718 | CYL. ROLLER BEARING | 1 |
| 4 | 910185906 | STRAIGHT PIN | 2 |
| 5 | R913000824 | STRAIGHT PIN | 1 |
| 6 | R909157039 | SCREW PLUG | 3 |
| 7 | R909831319 | DOUBLE BREAK-OFF PLUG | 5 |
| 8 | R902574119 | SWASH PLATE | 1 |
| 9 | R902577533 | SEGMENT | 1 |
| 10 | R902576786 | POSITIONING PISTON | 1 |
| 11 | R902576785 | OPPOSED PISTON | 1 |
| 12 | R902579265 | SETSCREW | 1 |
| 13 | R902579266 | SETSCREW | 1 |
| 14 | R902484554 | CENTERING TAB | 1 |
| 15 | R902554925 | ADJUSTING BUSH | 1 |
| 16 | R902469966 | MEASURING PISTON | 1 |
| 17 | R902464359 | IDLE ROLLER | 1 |

# H100-01353 - IMPLEMENT PUMP - 145CC

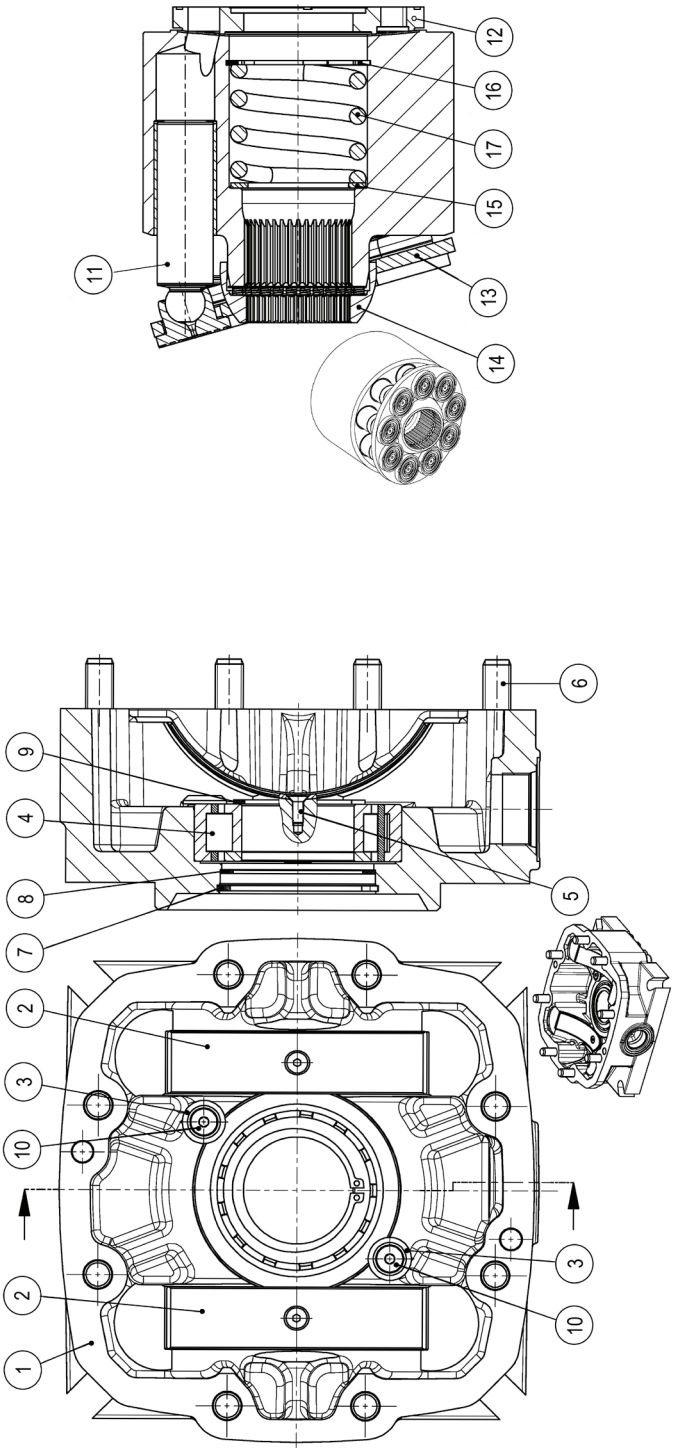


H-00222D 07/24

# H100-01353 - IMPLEMENT PUMP - 145CC

| Item | Part # | Description | Qty. |
|---|---|---|---|
| 1 | R902559950 | BEARING FLANGE | 1 |
| 2 | R902557158 | BEARING SHELL | 2 |
| 3 | R913052738 | PLAIN WASHER | 2 |
| 4 | R902572600 | CYL. ROLLER BEARING | 1 |
| 5 | R902571999 | COUNTERSUNK-HEAD SCREW | 2 |
| 6 | R902578917 | SOCKET HEAD CAP SCREW | 8 |
| 7 | R910116025 | RETAINING RING | 1 |
| 8 | R902400750 | SHIM RING | 1 |
| 9 | R910105848 | RETAINING RING | 1 |
| 10 | R902572000 | COUNTERSUNK-HEAD SCREW | 2 |
| 11 | R902548828 | PISTON PAD | 9 |
| 12 | R902568645 | CYLINDER SET | 1 |
| 13 | R902516020 | RETAINING PLATE | 1 |
| 14 | R902561892 | RETAINING BALL | 1 |
| 15 | R902482942 | WASHER | 1 |
| 16 | R913008468 | RETAINING RING | 1 |
| 17 | R902482941 | COMPRESSION SPRING | 1 |
| | **BELL HOUSING** | | |
| * | R902549512 | FLANGE | 1 |
| * | R902511031 | SPLINED COUPLING | 1 |
| * | R902650303 | O-RING | 1 |
| * | R909086635 | O-RING | 1 |
| * | R910109622 | SOCKET HEAD CAP SCREW | 4 |
| | **WHEEL** | | |
| * | R902492387 | WHEEL | 1 |
| * | R909083360 | RETAINING RING | 2 |

***MEANS NOT SHOWN**

# H100-01360 - IMPLEMENT PUMP - 175CC

**NOTE: APPLY GREASE TO O-RINGS**

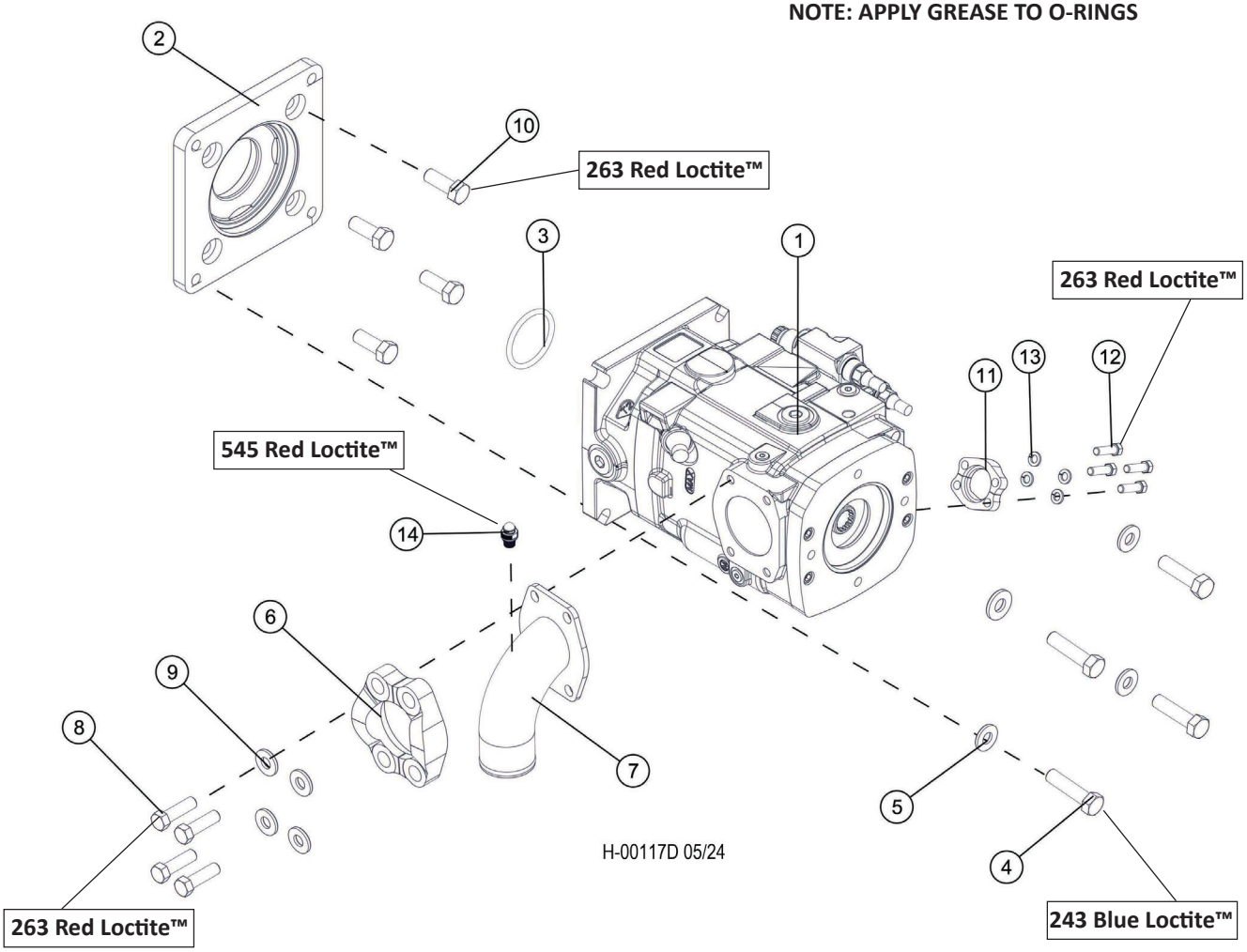


| Item | Part # | Description | Qty. |
|---|---|---|---|
| 1 | 57865 | PUMP, IMPLEMENT - REX 175CC/40 | 1 |
| 2 | 57898 | PAD, PUMP DRIVE BOX - REXROTH 175CC IMP | 1 |
| 3 | 15442-2 | O-RING, PUMP DRIVE PILOT - DRIVE | 1 |
| 4 | 15549 | BOLT - .75” X 2.0 **243 BLUE LOCTITE™** | 4 |
| 5 | 15550 | WASHER, SAE FLAT - .75” | 4 |
| 6 | 58139 | FLANGE, 13001H-5656K 175CC PUMP 57865 | 1 |
| 7 | 57880 | TUBE, SUCTION SERIES 40 175cc PUMP | 1 |
| 8 | 58378 | BOLT - 5/8-11 X 1 3/4” HEX HEAD **263 RED LOCTITE™** | 4 |
| 9 | 10771 | WASHER, SAE FLAT - .625” | 4 |
| 10 | 15502 | BOLT - .625” X 1.5” **263 RED LOCTITE™** | 4 |
| 11 | 15114 | KIT, SPLIT FLANGE - 1.25” (CODE 62) | 1 |
| 12 | 10736 | BOLT - .5” X 2” **263 RED LOCTITE™** | 4 |
| 13 | 10710 | WASHER, LOCK - .5” | 4 |
| 14 | 57820 | TAP, GAUGE PORT # 6 SAE - Oring Boss **545 RED LOCTITE™** | 1 |

# H100-01361 - IMPLEMENT PUMP - 175CC

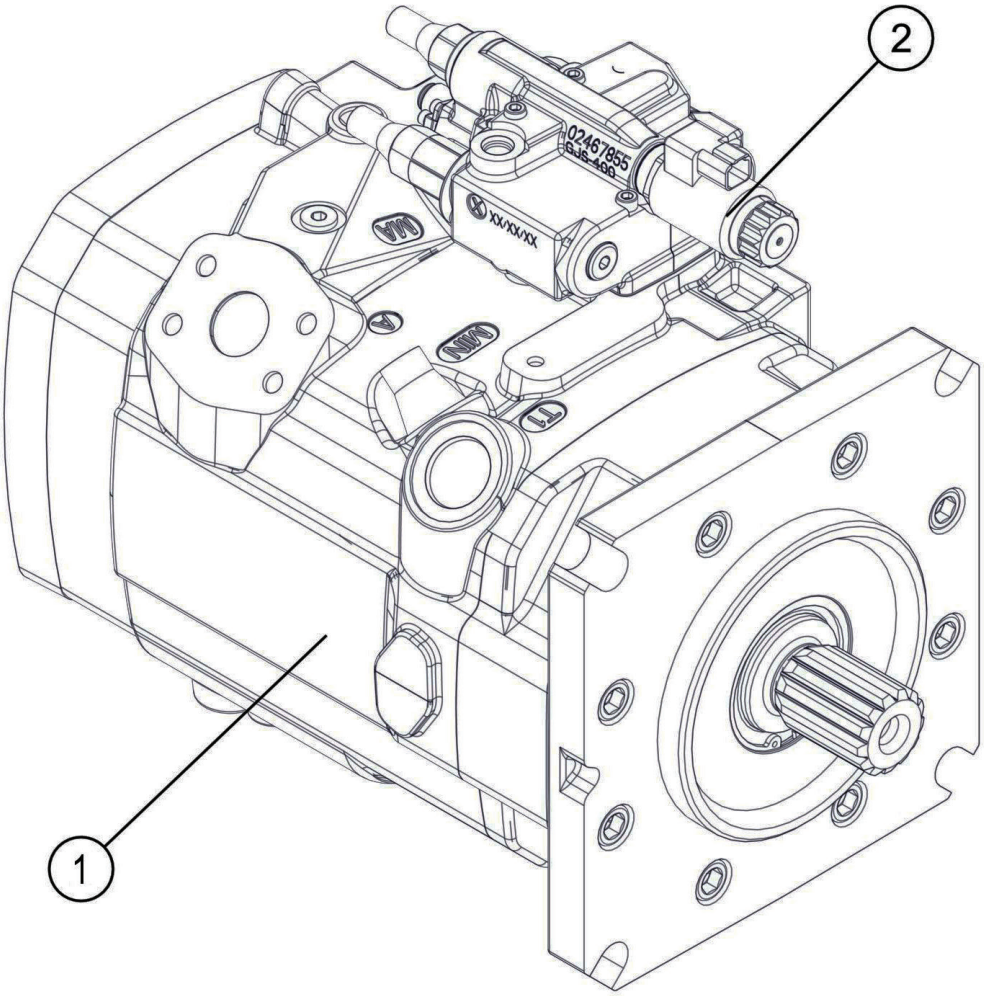


H-00140D 07/24

| Item | Part # | Description | Qty. |
|---|---|---|---|
| 1 | 57865 | PUMP, IMPLEMENT - REX 175CC/40 W/HP CONT | 1 |
| 2 | 53730 | SOLENOID COIL | 1 |
| * | 58256 | O-RING TO SEAL AUX. PUMP - GREEN HIGH TEMP | 1 |
| * | R902546266 | THRU-DRIVE 175cc to 125cc WHEEL PUMP | 1 |
| * | R902569652 | SEAL KIT | 1 |

*MEANS NOT SHOWN

# H100-01363 - IMPLEMENT PUMP - 175CC

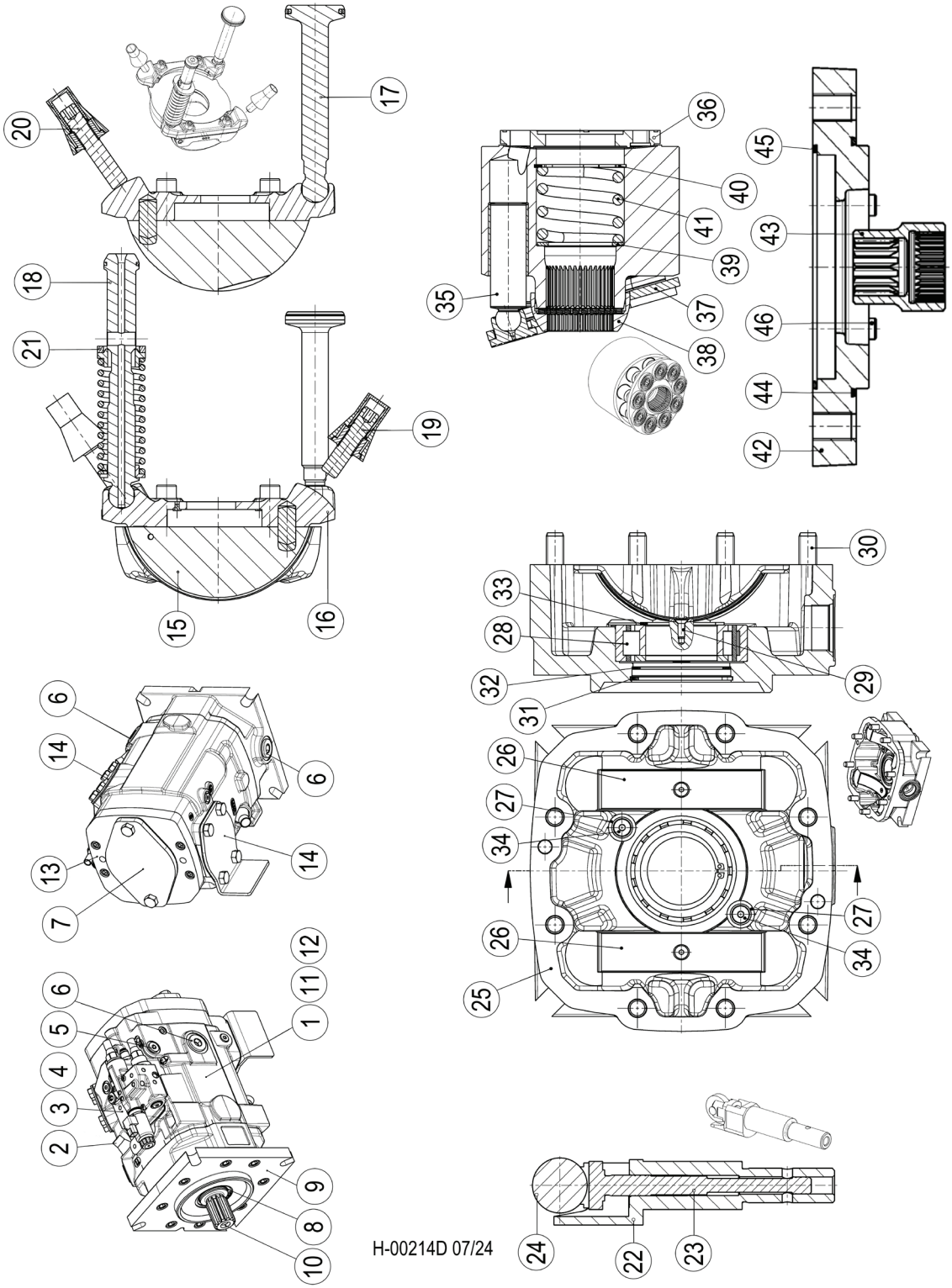

# H100-01363 - IMPLEMENT PUMP - 175CC

| Item | Part # | Description | Qty. |
|---|---|---|---|
| 1 | R902579633 | HOUSING | 1 |
| 2 | R902578803 | CONTROL | 1 |
| 3 | R902543515 | CONTROL VALVE | 1 |
| 4 | R902559826 | RETURN GUIDE | 1 |
| 5 | R902511576 | FILTER ELEMENT | 1 |
| 6 | R902601857 | SCREW PLUG | 3 |
| 7 | R902602980 | FLANGE COVER | 1 |
| 8 | 58286 | SHAFT SEALING RING | 1 |
| 9 | R902579676 | BEARING FLANGE | 1 |
| 10 | 65144 | DRIVE SHAFT | 1 |
| 11 | R902563624 | ROTARY GROUP | 1 |
| 12 | R902531102 | WHEEL | 1 |
| 13 | R902553159 | BELL HOUSING | 1 |
| 14 | R902581237 | FLANGE COVER | 1 |
| 15 | R902574131 | SWASH PLATE | 1 |
| 16 | R902579289 | SEGMENT | 1 |
| 17 | R902576790 | POSITIONING PISTON | 1 |
| 18 | R902576789 | OPPOSED PISTON | 1 |
| 19 | R902579263 | SETSCREW | 1 |
| 20 | R902579264 | SETSCREW | 1 |
| 21 | R902470682 | CENTERING TAB | 1 |
| 22 | R902554925 | ADJUSTING BUSH | 1 |
| 23 | R902469966 | MEASURING PISTON | 1 |
| 24 | R902464359 | IDLE ROLLER | 1 |
| 25 | R902564515 | BEARING FLANGE | 1 |
| 26 | R902557733 | BEARING SHELL | 2 |
| 27 | R913050406 | PLAIN WASHER | 2 |
| 28 | R902572600 | CYL. ROLLER BEARING | 1 |
| 29 | R902571999 | COUNTERSUNK-HEAD SCREW | 2 |
| 30 | R902578918 | SOCKET HEAD CAP SCREW | 8 |
| 31 | R910116025 | RETAINING RING | 1 |
| 32 | R902400750 | SHIM RING | 1 |
| 33 | R910105848 | RETAINING RING | 1 |
| 34 | R902572525 | COUNTERSUNK-HEAD SCREW | 2 |
| 35 | R902558457 | PISTON PAD | 9 |
| 36 | R902568649 | CYLINDER SET | 1 |
| 37 | R902515986 | RETAINING PLATE | 1 |
| 38 | R902561895 | RETAINING BALL | 1 |
| 39 | R902478656 | WASHER | 1 |
| 40 | R913060949 | RETAINING RING | 1 |
| 41 | R902470362 | COMPRESSION SPRING | 1 |
| 42 | R902549515 | FLANGE | 1 |
| 43 | R902496004 | SPLINED COUPLING | 1 |
| 44 | R909831132 | O-RING | 1 |
| 45 | 58256 | O-RING | 1 |
| 46 | R910109754 | SOCKET HEAD CAP SCREW | 4 |
| * | R902569652 | SEAL KIT | 1 |

# H100-01370 - IMPLEMENT PUMP SUCTION

**NOTE: APPLY GREASE TO O-RINGS**

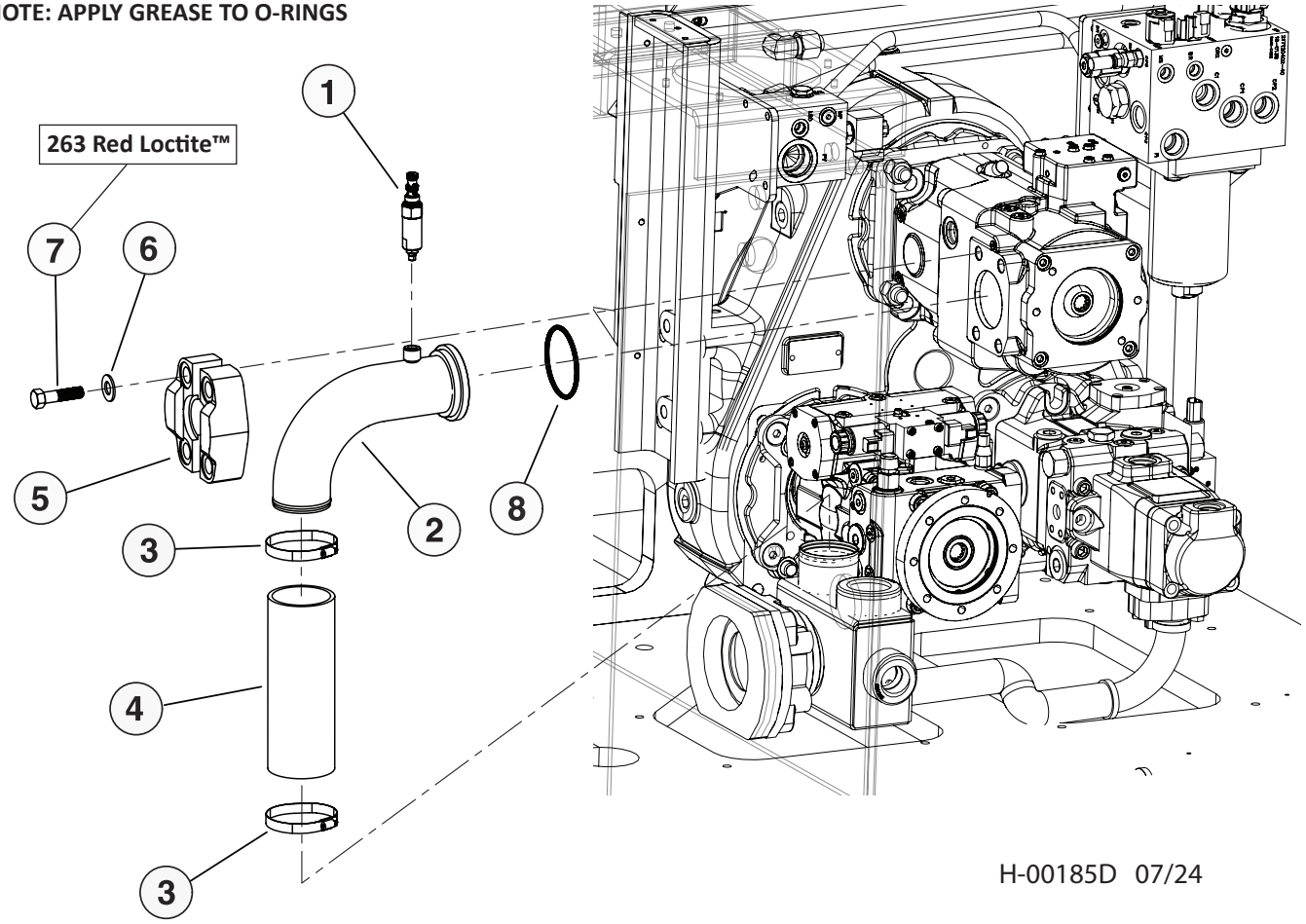


H-00185D 07/24

| Item | Part # | Description | Qty. |
|---|---|---|---|
| 1 | 55615 | FITTING, ADAPTOR - BLEED - SUCTION TUBE | 1 |
| 2 | 46265 | TUBE, SUCTION - IMP PUMP | 1 |
| 3 | 15613 | CLAMP, STRAP BAND - 3.5” | 2 |
| 4 | 65834 - (65868 - KIT) | HOSE, SUCTION, 7216-300213.5 00-00-00 | 1 |
| 5 | 22639 | KIT, SPLIT FLANGE - 3” (CODE 61)(METRIC) | 1 |
| 6 | 10721 | WASHER, LOCK - .625” | 4 |
| 7 | 15526 | BOLT - .625” X 2” **263 RED LOCTITE™** | 4 |
| 8 | 18695 | O-RING - 3” SF (CODE 61/62) | 1 |

# H200-00100 - IMPLEMENT PUMP - 175CC HD

**NOTE: APPLY GREASE TO O-RINGS**

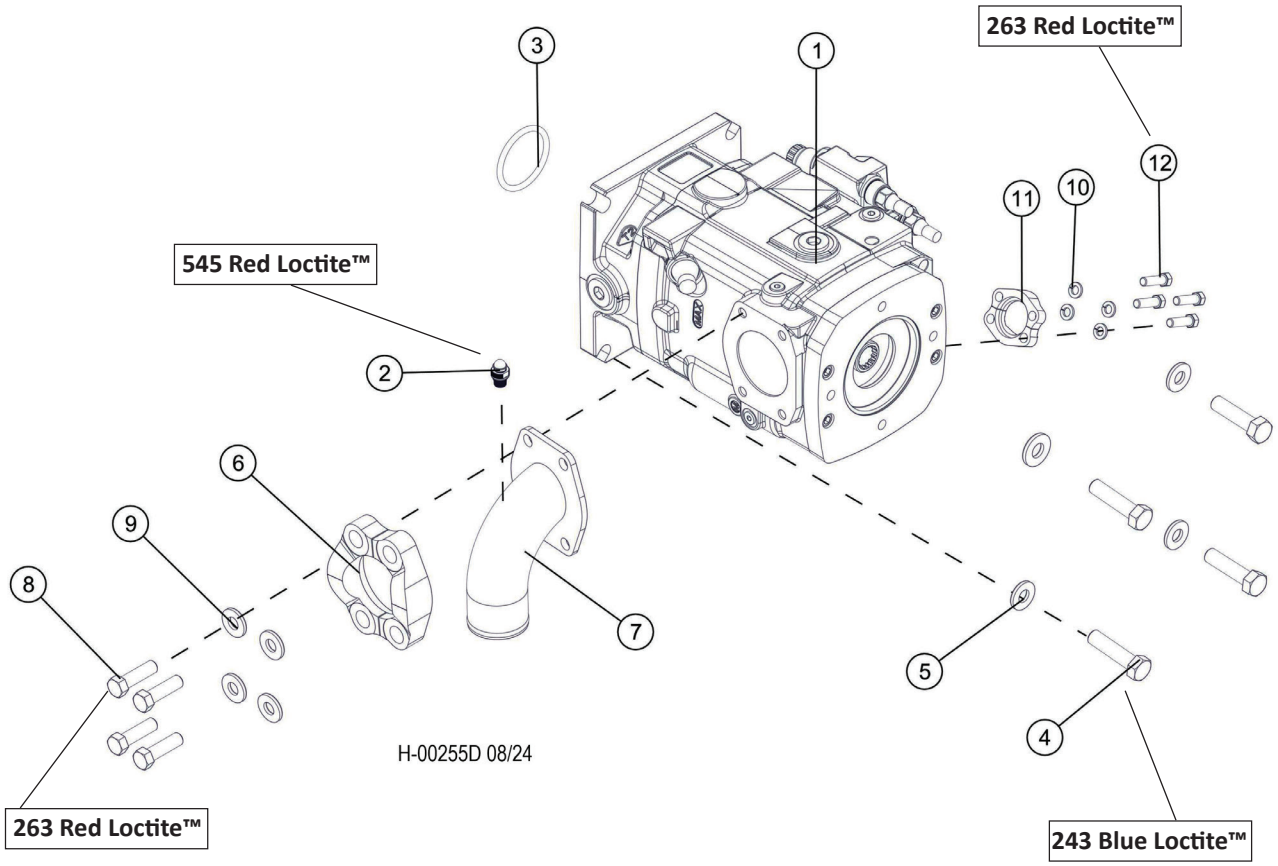


| Item | Part # | Description | Qty. |
|---|---|---|---|
| 1 | 57865 | PUMP, IMPLEMENT - REX 175CC/40 | 1 |
| 2 | 57820 | TAP, GAUGE PORT # 6 SAE - Oring Boss **545 RED LOCTITE™** | 1 |
| 3 | 15442-2 | O-RING, PUMP DRIVE PILOT - DRIVE | 1 |
| 4 | 15549 | BOLT - .75" X 2.0 **243 BLUE LOCTITE™** | 4 |
| 5 | 15550 | WASHER, SAE FLAT - .75" | 4 |
| 6 | 58139 | FLANGE, 13001H-5656K 175CC PUMP 57865 | 1 |
| 7 | 57880 | TUBE, SUCTION SERIES 40 175cc PUMP | 1 |
| 8 | 58378 | BOLT - 5/8-11 X 1 3/4" HEX HEAD **263 RED LOCTITE™** | 4 |
| 9 | 10771 | WASHER, SAE FLAT - .625" | 4 |
| 10 | 10710 | WASHER, LOCK - .5" | 4 |
| 11 | 15114 | KIT, SPLIT FLANGE - 1.25" (CODE 62) | 1 |
| 12 | 10736 | BOLT - .5" X 2" **263 RED LOCTITE™** | 4 |

# H100-01380 - IMPLEMENT PUMP COVER - NO AUX PUMP

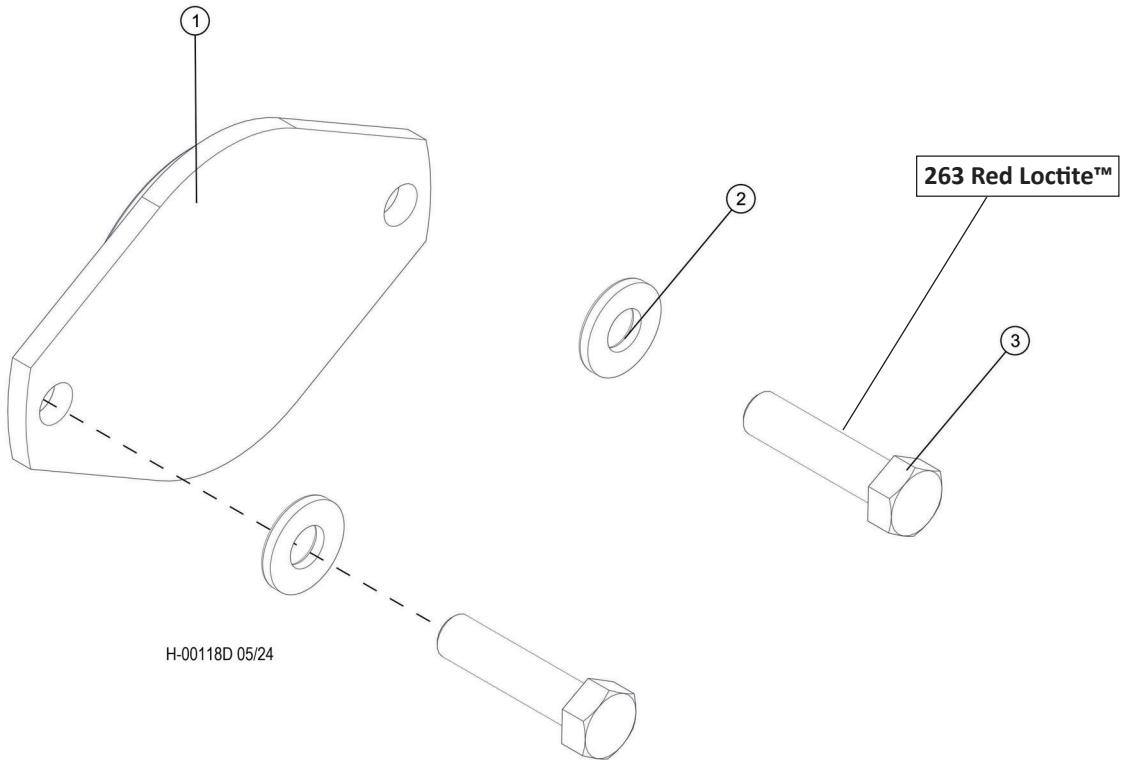


| Item | Part # | Description | Qty. |
|---|---|---|---|
| 1 | 55696 | COVER, BLANKING - IMP. PUMP | 1 |
| 2 | 10771 | WASHER, SAE FLAT - .625” | 2 |
| 3 | 15502 | BOLT - .625” X 1.5” **263 RED LOCTITE™** | 2 |

# H100-01390 - AUXILARY PUMP - 60CC

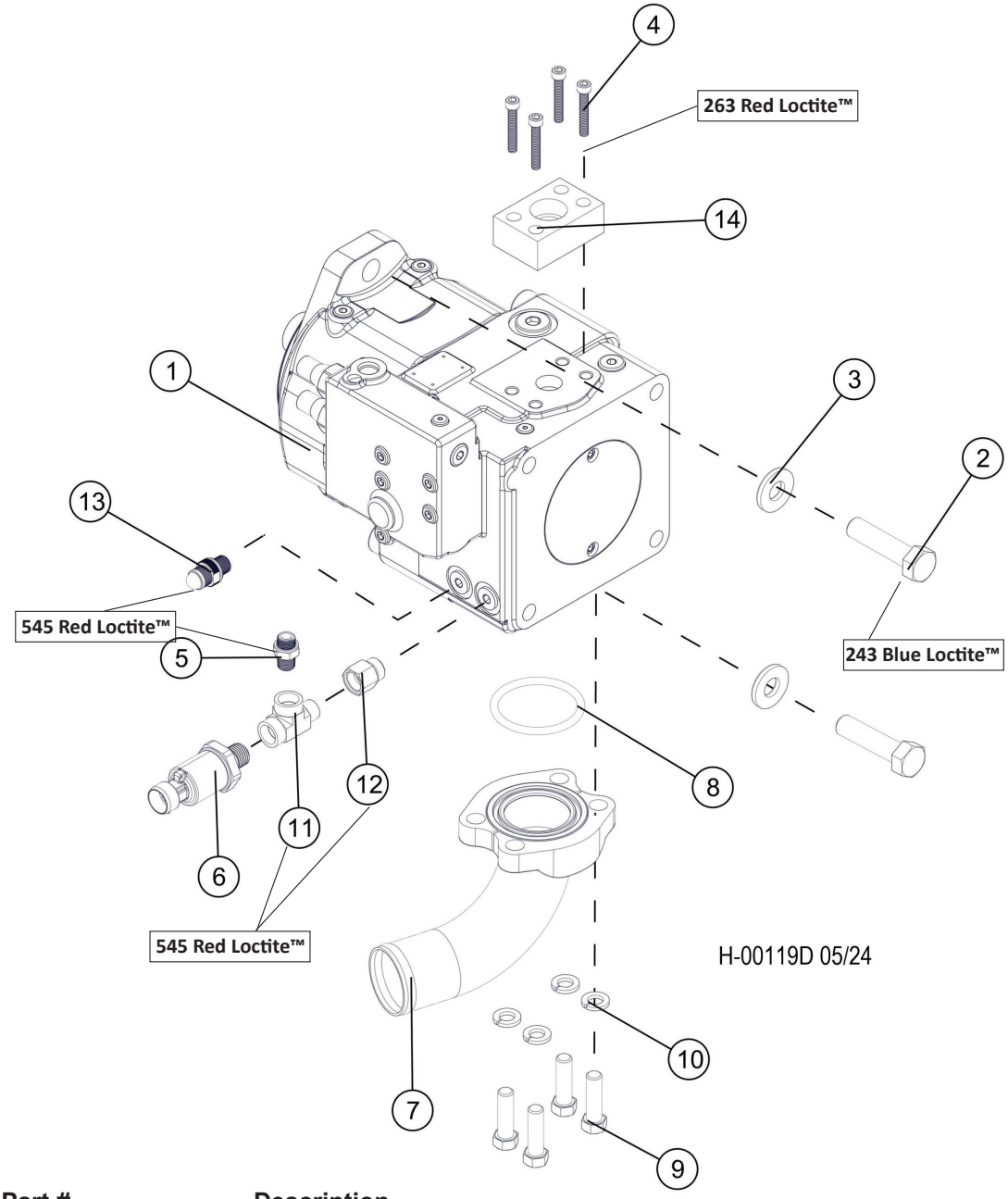


| Item | Part # | Description | Qty. |
|---|---|---|---|
| 1 | 54523 | PUMP, DISC SAW - HIGH PRESSURE (60CC) | 1 |
| 2 | 58378 | BOLT - 5/8-11 X 1 3/4" HEX HEAD **243 BLUE LOCTITE™** | 2 |
| 3 | 58390 | WASHER, FLAT - 5/8 ID x 1.0 OD (10 GA) | 2 |
| 4 | 58399 | BOLT - 3/8-16x1.5, SHC **263 RED LOCTITE™** | 4 |
| 5 | 55214 | CONNECTOR, STR - 848-TTO-04X04 (W/.031) **545 RED LOCTITE™** | 1 |
| 6 | 24532 | TRANSDUCER, DISC SAW Pressure | 1 |
| 7 | 55713 | FLANGE, ELBOW - 1988-32-32 | 1 |
| 8 | 58991 | O-RING, HP DISC SAW SUCTION | 1 |
| 9 | 10739 | BOLT - .5" X 1.5" | 4 |
| 10 | 10710 | WASHER, LOCK - .5" | 4 |
| 11 | 52186 | TEE, RUN - MALE (4 A0G5J5-S) **545 RED LOCTITE™** | 1 |
| 12 | 16294 | BUSHING, REDUCER - 6410-6-4 **545 RED LOCTITE™** | 1 |
| 13 | 57820 | TAP, GAUGE PORT # 6 SAE - Oring Boss **545 RED LOCTITE™** | 1 |
| 14 | 19808 | CONNECTOR, FLANGE PAD -FP62-12-12ORB-MK | 1 |

# H100-01391 - 60CC AUXILARY PUMP COMPONENTS

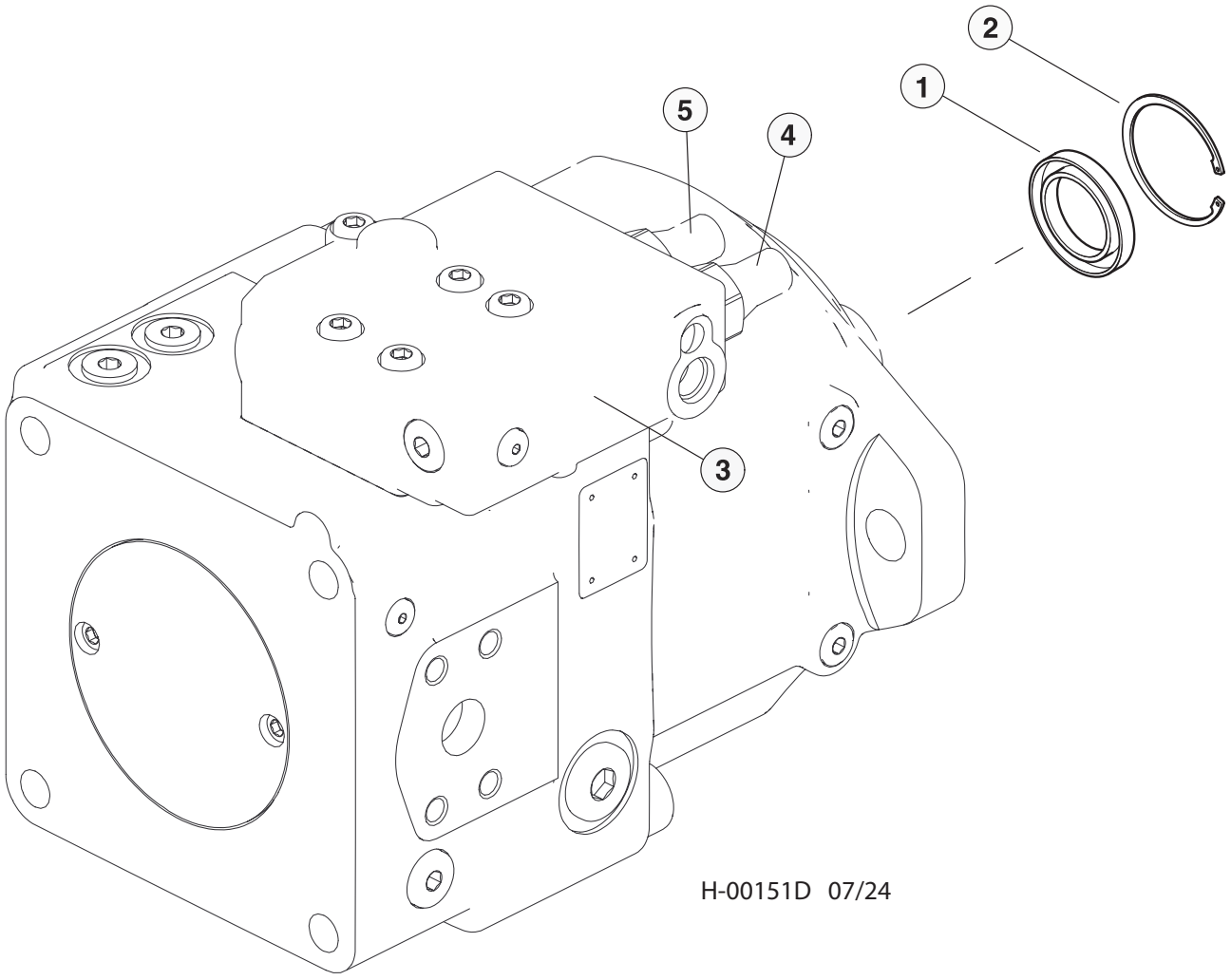


| Item | Part # | Description | Qty. |
|---|---|---|---|
| | 54523 | PUMP, DISC SAW - HIGH PRESSURE (60CC) | 1 |
| 1 | 57451 | SEAL, SHAFT - DISC SAW (HIGH PRESSURE) | 1 |
| 2 | 20685 | RING, SNAP - SHAFT SEAL (AA6VM160 MOTOR) | 1 |
| 3 | 699680 | CONTROLLER | 1 |
| 4 | 699550 | HIGH PRESSURE | 1 |
| 5 | 699550 | STANDBY | 1 |
| * | 58256 | ORING - THRU-DRIVE (GREEN- HIGH TEMP) | 1 |
| * | 24532 | PRESSURE SWITCH | 1 |

***MEANS NOT SHOWN**

# H100-01392 - 60CC AUXILARY PUMP COMPONENTS

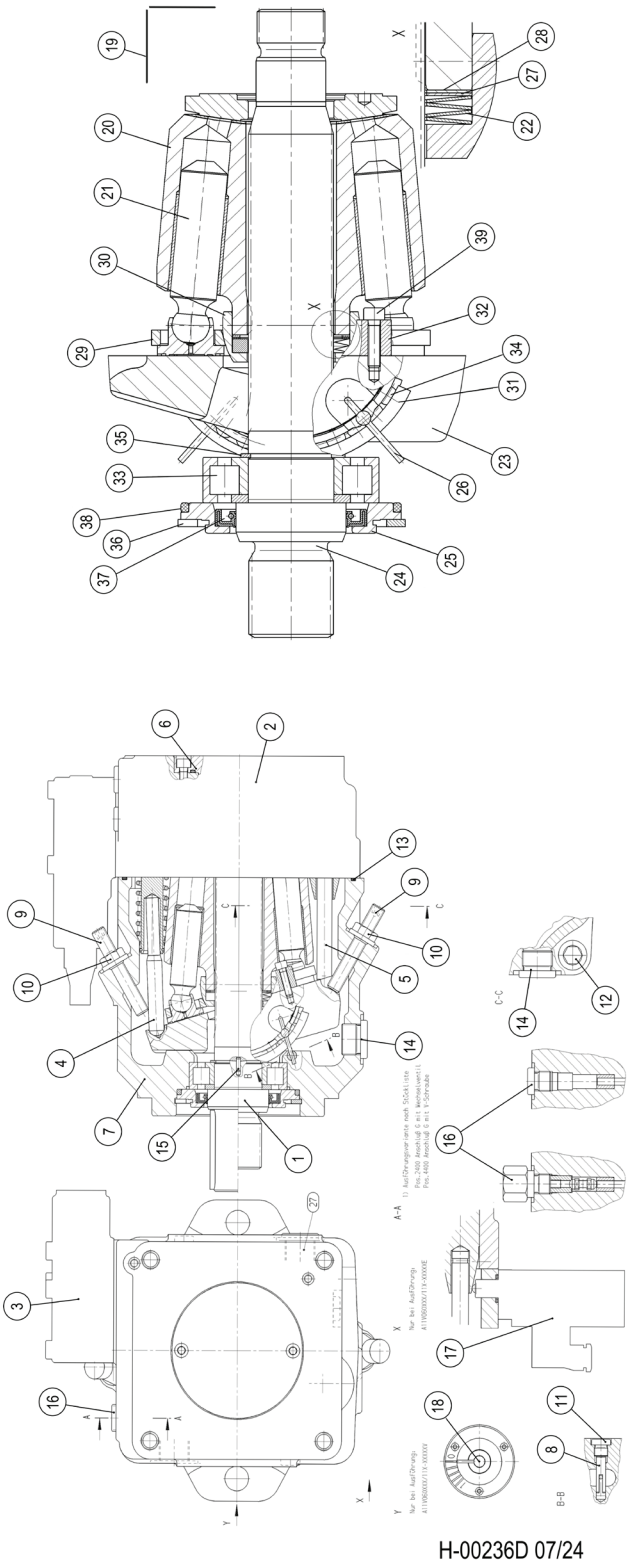


H-00236D 07/24

# H100-01392 - 60CC AUXILARY PUMP COMPONENTS

| Item | Part # | Description | Qty. |
|---|---|---|---|
| 1 | R902044500 | ROTARY GROUP | 1 |
| 2 | R909613038 | CONNECTION PLATE, LL | 1 |
| 3 | R909601060 | REGULATOR | 1 |
| 4 | R909446454 | CONTROL | 1 |
| 5 | R909441158 | CONTROL | 1 |
| 6 | R909441156 | COVER | 1 |
| 7 | R902118161 | HOUSING | 1 |
| 8 | R902132714 | PIVOT PIN | 4 |
| 9 | R909449078 | SETSCREW | 2 |
| 10 | R909152426 | SEALING NUT | 2 |
| 11 | R909153364 | SCREW PLUG | 4 |
| 12 | R909153680 | SOCKET HEAD CAP SCREW | 4 |
| 13 | R909830217 | O-RING | 1 |
| 14 | R909153339 | SCREW PLUG | 2 |
| 15 | R913016373 | SLOTTED SPRING PIN | 2 |
| 16 | R909153371 | SCREW PLUG | 1 |
| 17 | - | - | - |
| 18 | - | - | - |
| 19 | R902002457 | SEAL KIT | 1 |
| 20 | R902044493 | CYLINDER | 1 |
| 21 | R909440190 | PISTON PAD | 9 |
| 22 | R909074126 | CUP-SPRING STACK | 1 |
| 23 | R909440397 | CRADLE | 1 |
| 24 | R909449724 | DRIVE SHAFT | 1 |
| 25 | R909440442 | LOCKING RING | 1 |
| 26 | R909076233 | WIRE | 4 |
| 27 | R909078316 | SHIM RING | 1 |
| * | R909078317 | SHIM RING | 1 |
| * | R909411553 | SHIM RING | 1 |
| * | R909411554 | SHIM RING | 1 |
| 28 | R909078317 | SHIM RING | 1 |
| 29 | R902205417 | RETAINING PLATE | 1 |
| 30 | R902041870 | RETAINING BALL | 1 |
| 31 | R902066586 | BEARING SHELL PAIR | 1 |
| 32 | R909432414 | RETAINING SEGMENT | 2 |
| 33 | R909153801 | CYL. ROLLER BEARING | 1 |
| 34 | R909831918 | CAGE PAIR | 1 |
| 35 | R909083360 | RETAINING RING | 1 |
| 36 | R909083416 | RETAINING RING | 1 |
| 37 | R909831179 | ROTARY SHAFT LIP-TYPE SEAL | 1 |
| 38 | R909083822 | O-RING | 1 |
| 39 | R909831328 | SOCKET HEAD CAP SCREW | 4 |

# H100-01393 - 60CC AUXILARY PUMP COMPONENTS

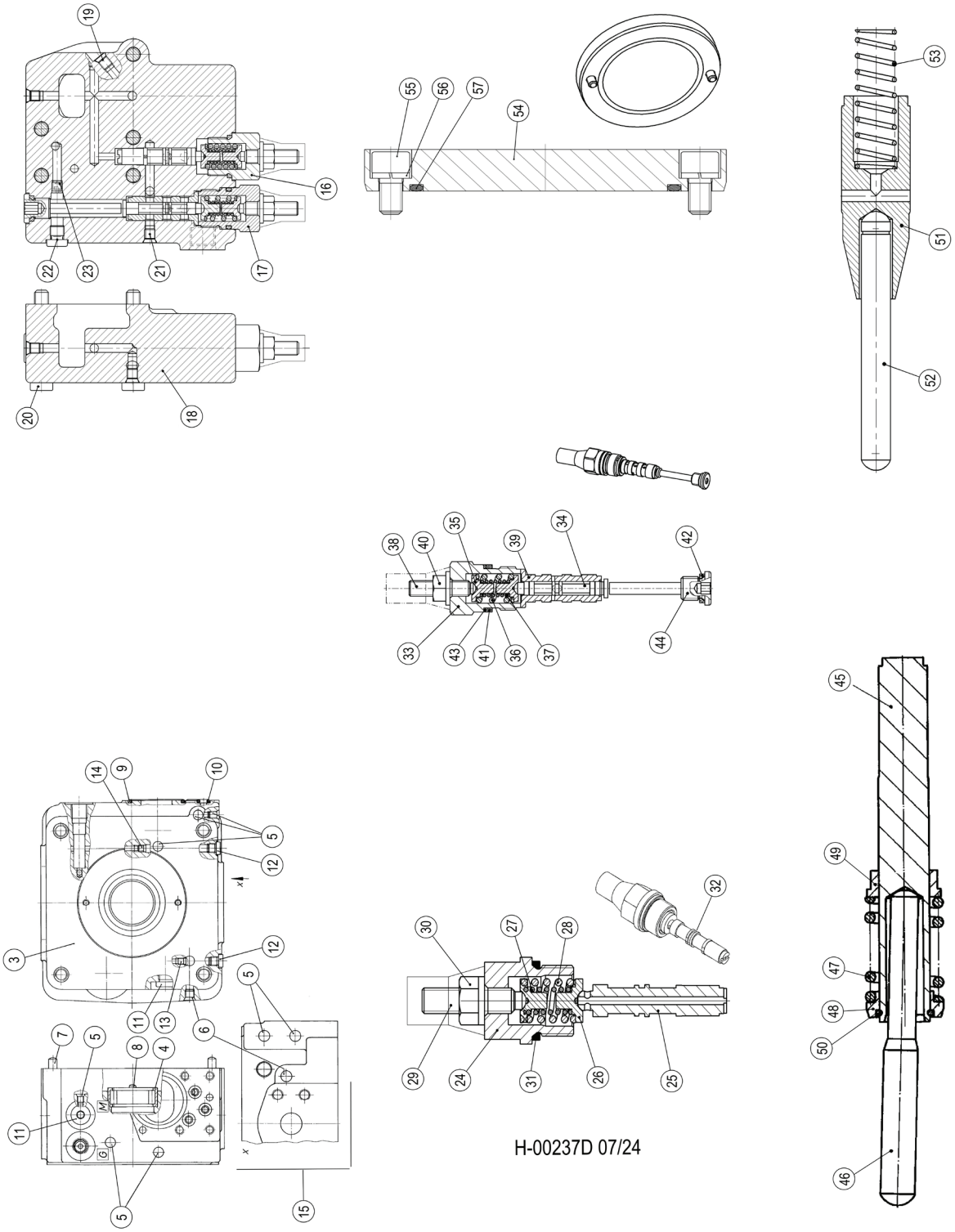


H-00237D 07/24

# H100-01393 - 60CC AUXILARY PUMP COMPONENTS

| Item | Part # | Description | Qty. |
|---|---|---|---|
| 1 | R902044491 | CYLINDER | 1 |
| 2 | R902010095 | CONTROL PLATE, LEFT-HAND ROTATION | 1 |
| 3 | R909651962 | CONNECTION PLATE, LL | 1 |
| 4 | R909156249 | CYL. ROLLER BEARING | 1 |
| 5 | R909831318 | DOUBLE BREAK-OFF PLUG | 4 |
| 6 | R909831319 | DOUBLE BREAK-OFF PLUG | 1 |
| 7 | R909084213 | STRAIGHT PIN | 2 |
| 8 | R909087755 | STRAIGHT PIN | 1 |
| 9 | R909086336 | O-RING | 1 |
| 10 | R902602890 | R-RING | 3 |
| 11 | R909153371 | SCREW PLUG | 2 |
| 12 | R909154024 | SCREW PLUG | 2 |
| 13 | R909156494 | NOZZLE | 1 |
| 14 | R909156493 | NOZZLE | 1 |
| 15 | R902002464 | SEAL KIT | 1 |
| 16 | R909609420 | CONTROL ELEMENT | 1 |
| 17 | R909608948 | CONTROL ELEMENT | 1 |
| 18 | R909651695 | CONTROL HOUSING | 1 |
| 19 | R909445306 | DOUBLE BREAK-OFF PLUG | 1 |
| 20 | R909083043 | SOCKET HEAD CAP SCREW | 5 |
| 21 | R909831318 | DOUBLE BREAK-OFF PLUG | 7 |
| 22 | R909154024 | SCREW PLUG | 1 |
| 23 | R909156490 | NOZZLE | 1 |
| 24 | R909440779 | SCREW PLUG | 1 |
| 25 | R902004621 | CONTROL PISTON | 1 |

# H100-01394 - 60CC AUXILARY PUMP COMPONENTS

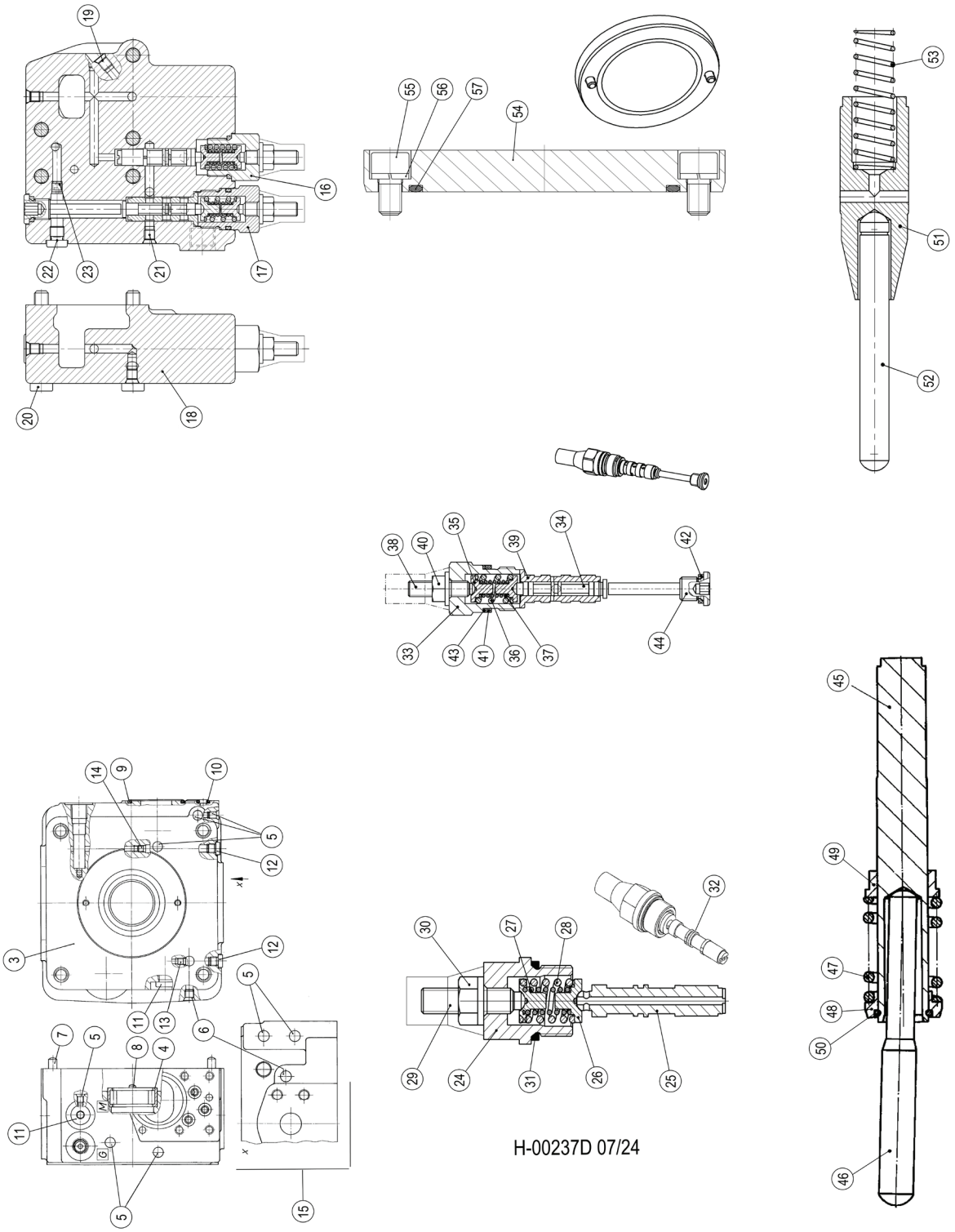


H-00237D 07/24

# H100-01394 - 60CC AUXILARY PUMP COMPONENTS

| Item | Part # | Description | Qty. |
|---|---|---|---|
| 26 | R909444160 | SPRING BOLT | 2 |
| 27 | R909436395 | COMPRESSION SPRING | 1 |
| 28 | R909436795 | COMPRESSION SPRING | 1 |
| 29 | R909444953 | SETSCREW | 1 |
| 30 | R909152707 | SEALING NUT | 1 |
| 31 | R909083758 | O-RING | 1 |
| 32 | R902221229 | SEAL KIT | 1 |
| 33 | R902262155 | SCREW PLUG | 1 |
| 34 | R909449719 | CONTROL PISTON | 1 |
| 35 | R909436839 | SPRING BOLT | 2 |
| 36 | R909436394 | COMPRESSION SPRING | 1 |
| 37 | R909436395 | COMPRESSION SPRING | 1 |
| 38 | R909444953 | SETSCREW | 1 |
| 39 | R902004934 | CONTROL SLEEVE | 1 |
| 40 | R909152707 | SEALING NUT | 1 |
| 41 | R909083758 | O-RING | 1 |
| 42 | R90908374 | O-RING | 1 |
| 43 | R900228795 | BACKUP RING | 1 |
| 44 | R902029165 | SCREW PLUG | 1 |
| 45 | R909445195 | POSITIONING PISTON | 1 |
| 46 | R909445749 | ADJUSTING ROD | 1 |
| 47 | R909440770 | COMPRESSION SPRING | 1 |
| 48 | R909440739 | SPRING DISK | 1 |
| 49 | R902025360 | BUSHING | 1 |
| 50 | R909830683 | SNAP RING | 1 |
| 51 | R909651665 | RESET PISTON | 1 |
| 52 | R902192192 | RESET ROD | 1 |
| * | R909651662 | RESET ROD | 1 |
| * | R909651663 | RESET ROD | 1 |
| * | R909651664 | RESET ROD | 1 |
| 53 | R909440771 | COMPRESSION SPRING | 1 |

# H100-01400 - AUXILARY PUMP - 71CC

**NOTE: APPLY GREASE TO O-RINGS**

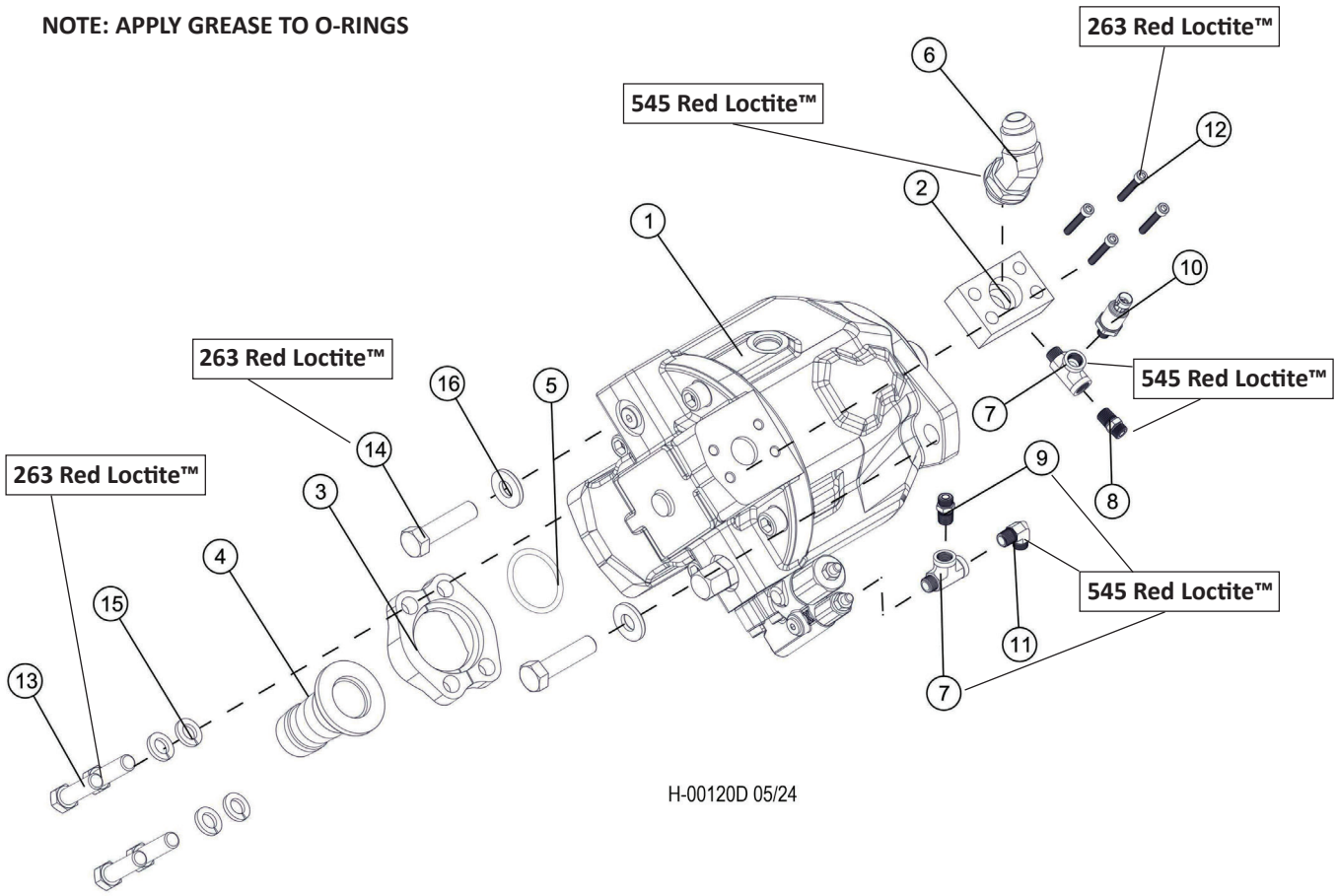


| Item | Part # | Description | Qty. |
|---|---|---|---|
| 1 | 19509 | PUMP, AUX.-BRUSH CUTTER (W/MAX VOL) | 1 |
| 2 | 22758 | CONNECTOR, FLANGE PAD - W46K-16-16 (SAE) | 1 |
| 3 | 21226 | KIT, SPLIT FLANGE - 2.0” (CODE 61) | 1 |
| 4 | 52148 | MANIFOLD, FLUSHING - WHEEL MOTORS (SEQUE | 1 |
| 5 | 58991 | O-RING, HP DISC SAW SUCTION | 1 |
| 6 | 16460 | ELBOW, 45 - FF2068T-1616S **545 RED LOCTITE™** | 1 |
| 7 | 52186 | TEE, RUN - MALE (4 A0G5J5-S) **545 RED LOCTITE™** | 2 |
| 8 | 55214 | CONNECTOR, STR - 848-TTO-04X04 (W/.031) **545 RED LOCTITE™** | 1 |
| 9 | 16541 | CONNECTOR, STR - FF1852T-0404S **545 RED LOCTITE™** | 1 |
| 10 | 24532 | TRANSDUCER, DISC SAW Pressure **545 RED LOCTITE™** | 1 |
| 11 | 16540 | ELBOW, 90 - FF1868T-0404S **545 RED LOCTITE™** | 1 |
| 12 | 58399 | BOLT - 3/8-16x1.5, SHC **263 RED LOCTITE™** | 4 |
| 13 | 10739 | BOLT - .5” X 1.5” **263 RED LOCTITE™** | 4 |
| 14 | 58378 | BOLT - 5/8-11 X 1 3/4” HEX HEAD **263 RED LOCTITE™** | 2 |
| 15 | 10710 | WASHER, LOCK - .5” | 4 |
| 16 | 58390 | WASHER, FLAT - 5/8 ID x 1.0 OD (10 GA) | 2 |

# H100-01401 - 71CC AUXILARY PUMP COMPONENTS

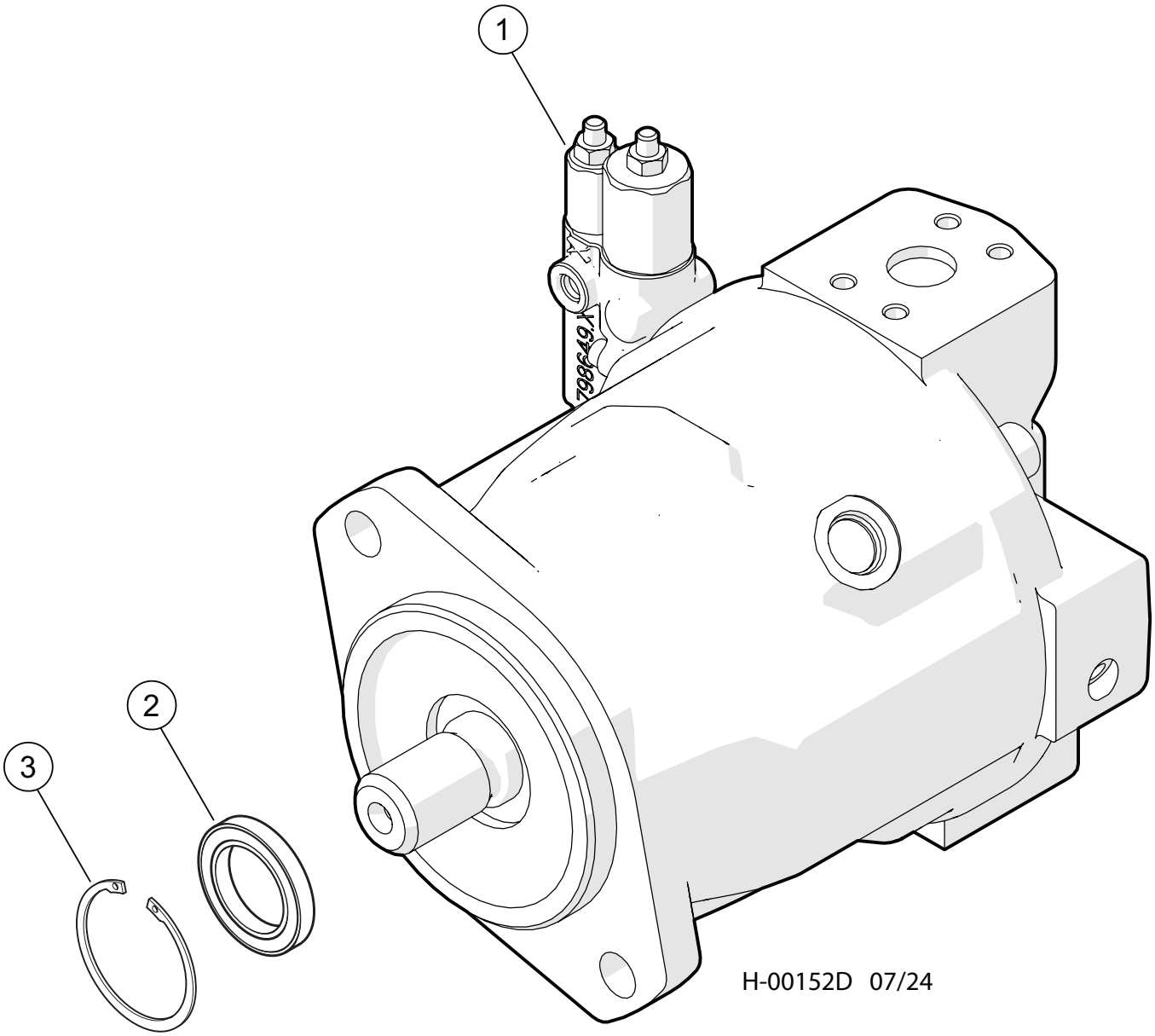


| Item | Part # | Description | Qty. |
|---|---|---|---|
| | 19509 | PUMP, AUX.-BRUSH CUTTER (W/MAX VOL) 71cc | 1 |
| 1 | 19462 | UNLOADING BLOCK | 1 |
| 2 | 20685 | RETAINING RING | 1 |
| 3 | R910764701 | SHAFT SEAL RING | 1 |
| * | R902088365 | COUPLING | 1 |
| * | 54032 | THRU DRIVE - W/TRACK DRIVE PUMP | 1 |
| | 5140-635-007 | SEAL KIT | 1 |

***MEANS NOT SHOWN**

# H100-01402 - 71CC AUXILARY PUMP COMPONENTS

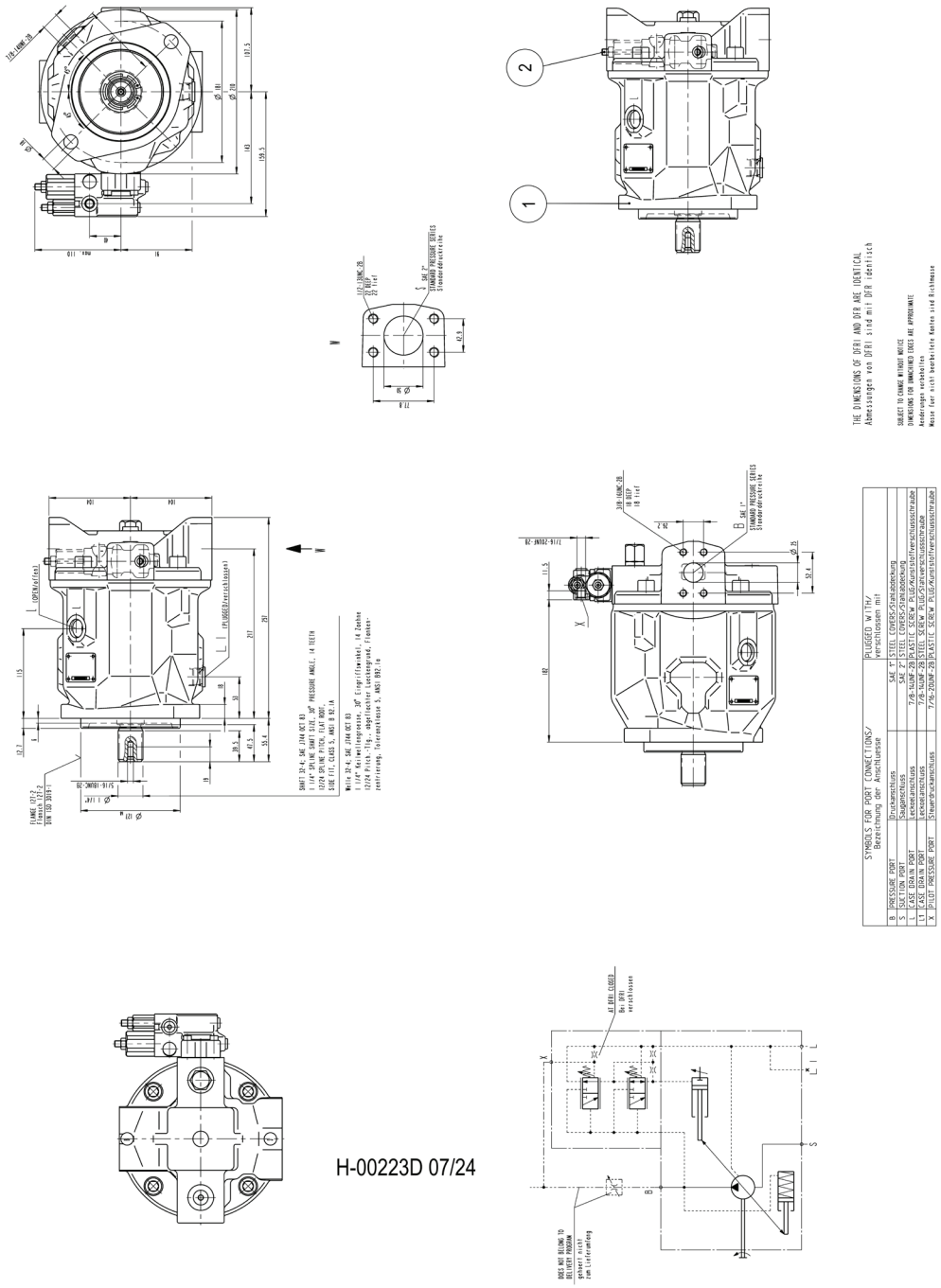

H-00223D 07/24

| Item | Part # | Description | Qty. |
|---|---|---|---|
| 1 | R902429405 | BASE UNIT | 1 |
| 2 | R902470580 | CONTROL VALVE | 1 |

# H100-01403 - 71CC AUXILARY PUMP COMPONENTS

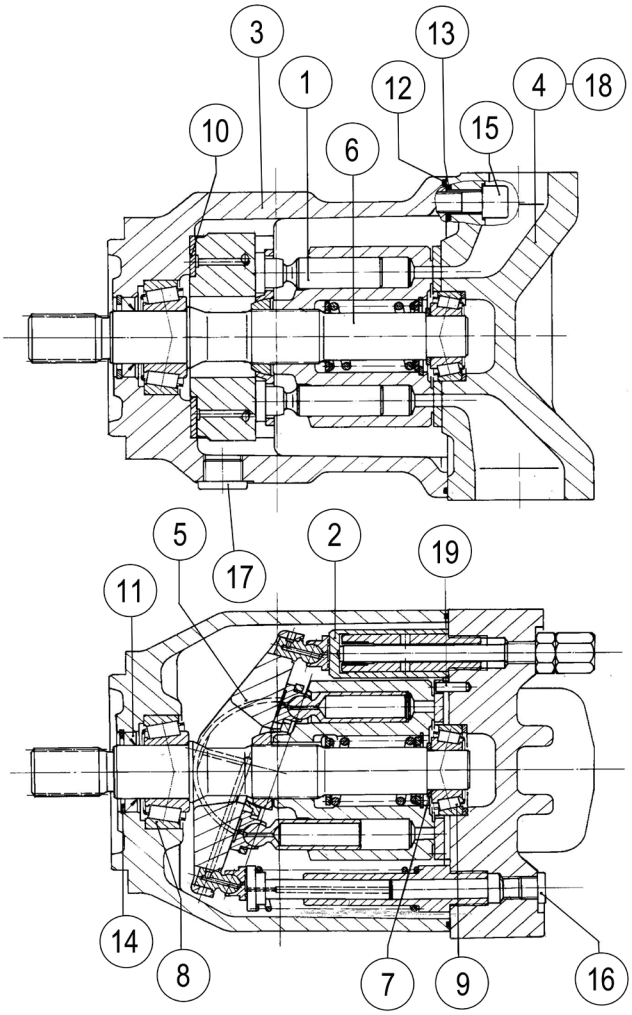


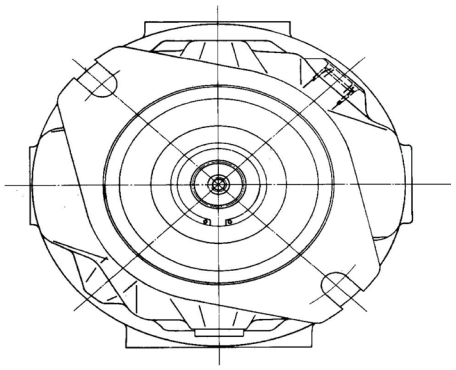

H-00224D 07/24

| Item | Part # | Description | Qty. |
|---|---|---|---|
| 1 | R910960499 | ROTARY GROUP | 1 |
| 2 | R902538141 | ADJUSTING PIECE | 1 |
| 3 | R910915775 | PUMP HOUSING | 1 |
| 4 | R902426033 | CONNECTION PLATE | 1 |
| 5 | R910961020 | SWASH PLATE | 1 |
| 6 | R910998844 | DRIVE SHAFT | 1 |
| 7 | R910939005 | ADJUSTMENT SHIM | 1 |
| 8 | R910720224 | TAPERED-ROLLER BEARING | 1 |
| 9 | R910720232 | TAPERED-ROLLER BEARING | 1 |
| 10 | R910902777 | BEARING SHELL | 2 |
| 11 | R910764701 | SHAFT SEALING RING | 1 |
| 12 | R910720194 | O-RING | 1 |
| 13 | R913052118 | R-RING | 4 |
| 14 | R910941918 | RETAINING RING | 1 |
| 15 | R910110272 | SOCKET HEAD CAP SCREW | 4 |
| 16 | R909151979 | SCREW PLUG | 1 |
| 17 | R909153339 | SCREW PLUG | 1 |
| 18 | R902584425 | DOUBLE BREAK-OFF PLUG | 1 |
| 19 | R902533908 | STRAIGHT PIN | 1 |

# H100-01404 - 71CC AUXILARY PUMP COMPONENTS

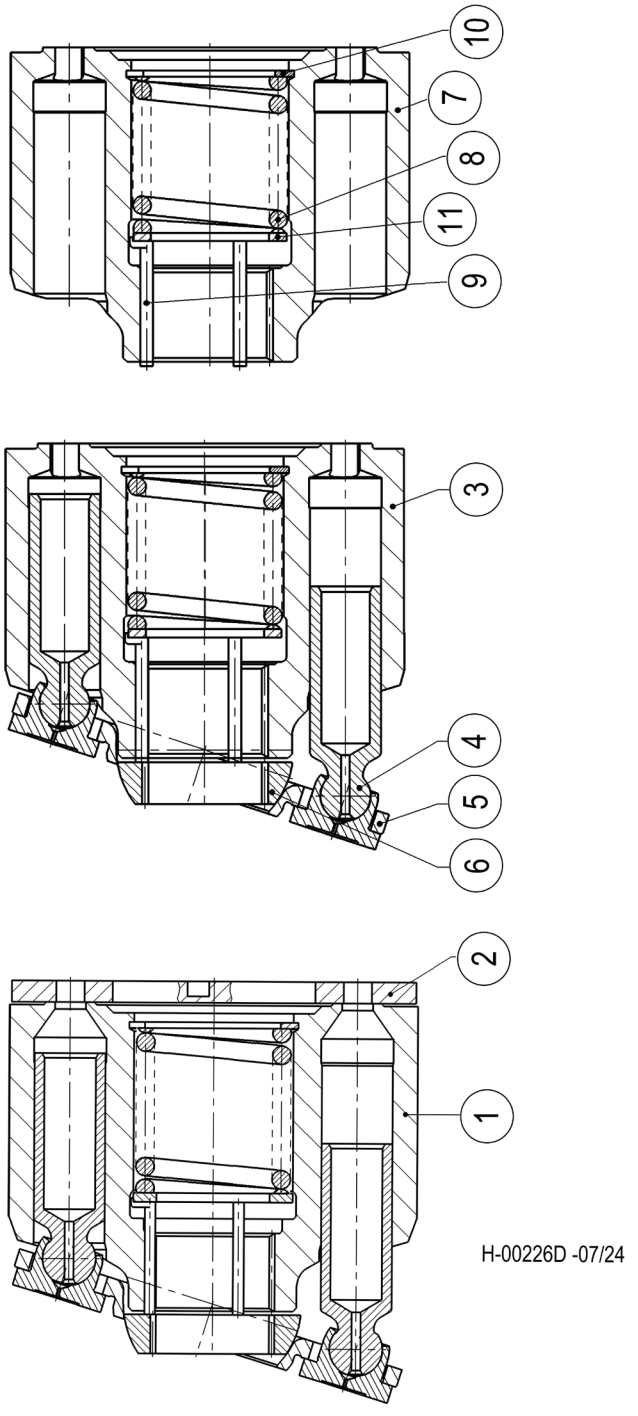

# H100-01404 - 71CC AUXILARY PUMP COMPONENTS

| Item | Part # | Description | Qty. |
|---|---|---|---|
| 1 | R910993465 | ROTARY GROUP | 1 |
| 2 | R902445480 | DISTRIBUTOR PLATE | 1 |
| 3 | R902512987 | CYLINDER ASSEMBLY KIT | 1 |
| 4 | R902431406 | PISTON PAD | 9 |
| 5 | R902437512 | RETAINING PLATE | 1 |
| 6 | R902443449 | RETAINING BALL | 1 |
| 7 | R910999302 | CYLINDER | 1 |
| 8 | R910720178 | COMPRESSION SPRING | 1 |
| 9 | R902400741 | PRESSURE PIN | 3 |
| 10 | R910919038 | V-RING | 1 |
| 11 | R910720186 | SUPPORTING DISC | 1 |

# H100-01405 - 71CC AUXILARY PUMP COMPONENTS

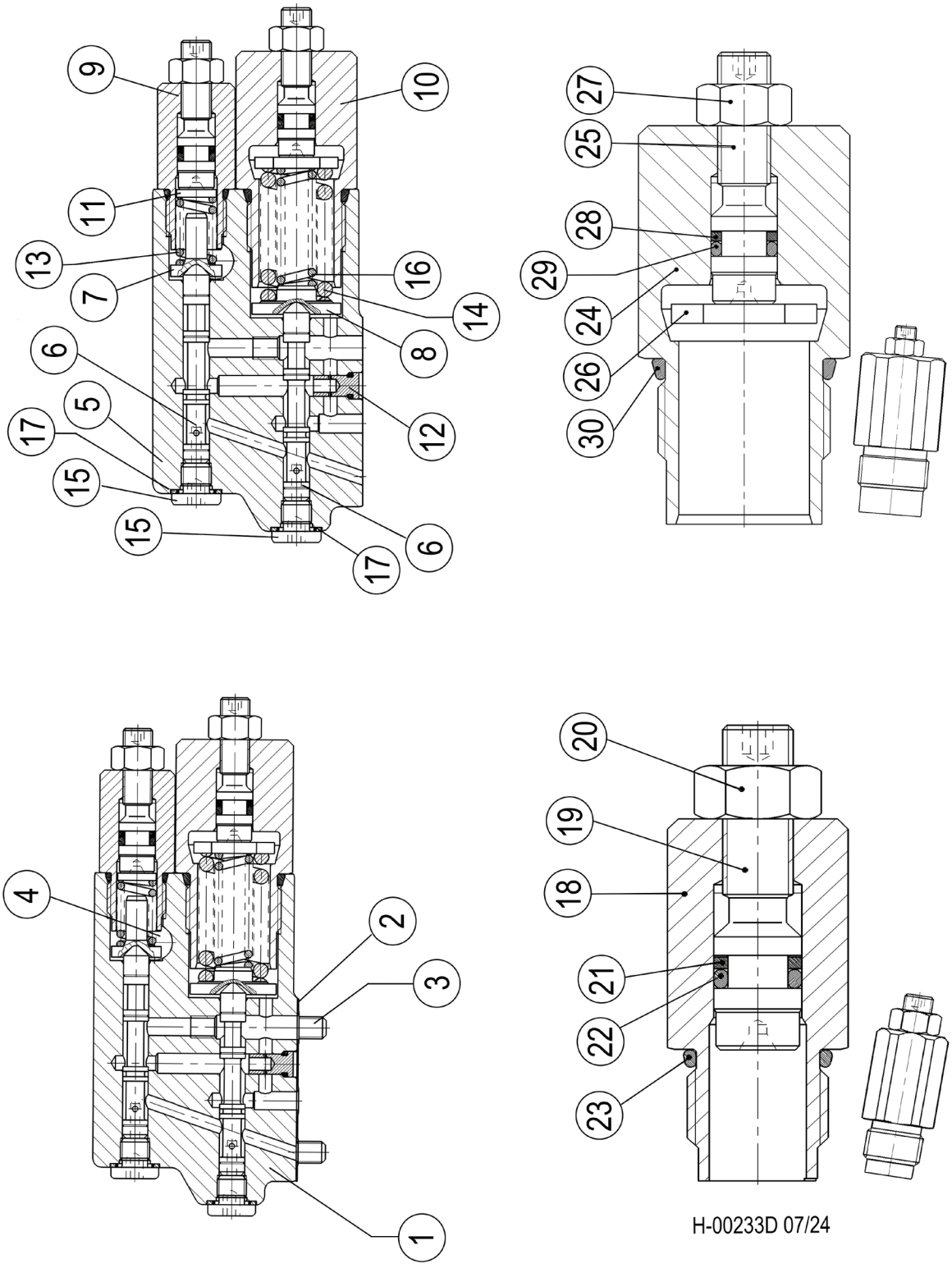


H-00233D 07/24

# H100-01405 - 71CC AUXILARY PUMP COMPONENTS

| Item | Part # | Description | Qty. |
|---|---|---|---|
| 1 | R902470582 | CONTROL VALVE | 1 |
| 2 | R902573525 | SEAL | 1 |
| 3 | R910900443 | SOCKET HEAD CAP SCREW | 4 |
| 4 | R910764647 | SCREW PLUG | 1 |
| 5 | R902434572 | VALVE HOUSING | 1 |
| 6 | R910900311 | VALVE SPOOL | 2 |
| 7 | R910920595 | SPRING DISK | 1 |
| 8 | R902449500 | SPRING DISK | 1 |
| 9 | R902451578 | SERVO UNIT | 1 |
| 10 | R902451580 | SERVO UNIT | 1 |
| 11 | R910900362 | WASHER | 1 |
| 12 | R902451582 | ORIFICE | 1 |
| 13 | R910920596 | COMPRESSION SPRING | 1 |
| 14 | R910707031 | COMPRESSION SPRING | 1 |
| 15 | R910933812 | SCREW PLUG | 2 |
| 16 | R910911509 | COMPRESSION SPRING | 1 |
| 17 | R910642827 | BONDED SEAL RING | 2 |
| 18 | R902448797 | SCREW PLUG | 1 |
| 19 | R902445453 | STUD BOLT | 1 |
| 20 | R910934194 | HEXAGON NUT | 1 |
| 21 | R910946269 | BACKUP RING | 1 |
| 22 | R910080519 | O-RING | 1 |
| 23 | R910919314 | O-RING | 1 |
| 24 | R902474069 | SCREW PLUG | 1 |
| 25 | R902445453 | STUD BOLT | 1 |
| 26 | R902417465 | WASHER | 1 |
| 27 | R910934194 | HEXAGON NUT | 1 |
| 28 | R910946269 | BACKUP RING | 1 |
| 29 | R910080519 | O-RING | 1 |
| 30 | R910919322 | O-RING | 1 |

# H100-01410 - MANIFOLD SINGLE PUMP FLOW

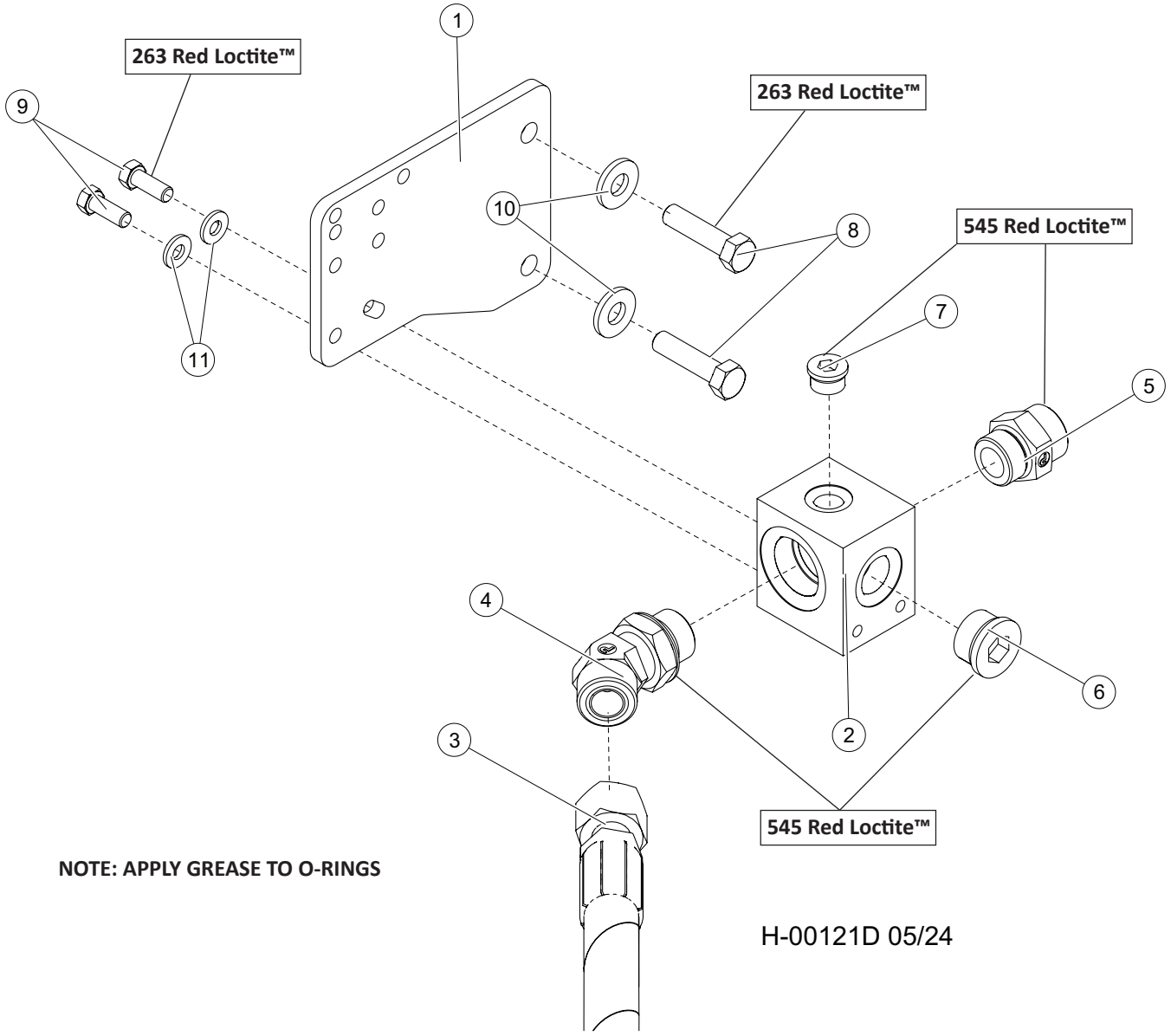


**NOTE: APPLY GREASE TO O-RINGS**

H-00121D 05/24

| Item | Part # | Description | Qty. |
|---|---|---|---|
| 1 | 60444 | MOUNT, MANIFOLD | 1 |
| 2 | 51450 | MANIFOLD, RETURN CHECK | 1 |
| 3 | 58027 | HOSE, HYD, IMP PRESS 40/D-SERIES | 1 |
| 4 | 17056 | ELBOW, 45 - FF2068T-2020S **545 RED LOCTITE™** | 1 |
| 5 | 17344 | CONNECTOR, STR - FF1852T-2020S **545 RED LOCTITE™** | 1 |
| 6 | 15584 | PLUG - 6408-HHP-12 **545 RED LOCTITE™** | 1 |
| 7 | 18949 | PLUG - 6408-HHP-8 **545 RED LOCTITE™** | 1 |
| 8 | 50100 | BOLT - .5” X 1.25” **263 RED LOCTITE™** | 2 |
| 9 | 11707 | BOLT - .375” X 1” **263 RED LOCTITE™** | 2 |
| 10 | 15534 | WASHER, SAE FLAT - .5” | 2 |
| 11 | 15528 | WASHER, SAE FLAT - .375” OR 3/8” | 2 |

# H100-01420 - PUMP, TRACK DRIVE - LH (VTG90)

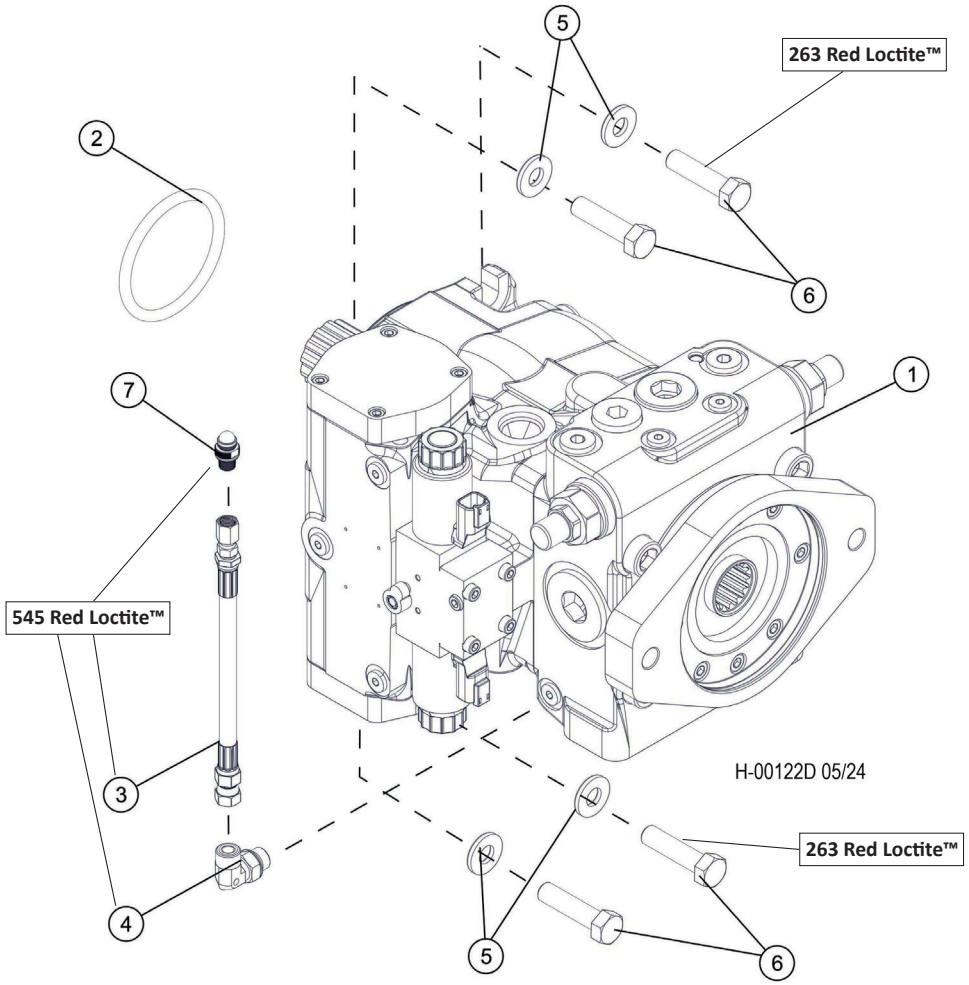


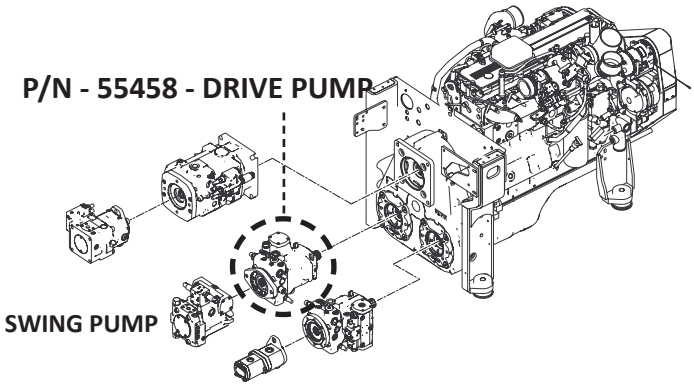


| Item | Part # | Description | Qty. |
|---|---|---|---|
| 1 | 55458 | PUMP, TRACK DRIVE - LH C SERIES (VTG90) | 1 |
| 2 | 53718 | ORING, TRACK DRIVE PUMP PILOT | 1 |
| 3 | 58063 | HOSE, GAUGE PORT EXTENSION **545 RED LOCTITE™** | 1 |
| 4 | 16540 | ELBOW, 90 - FF1868T-0404S **545 RED LOCTITE™** | 1 |
| 5 | 15534 | WASHER, SAE FLAT - .5” | 4 |
| 6 | 50100 | BOLT - .5” X 1.25” **263 RED LOCTITE™** | 4 |
| 7 | 57819 | TAP, GAUGE PORT - #4 SAE ORING BOSS- ST **545 RED LOCTITE™** | 1 |

# H100-01421 - PUMP, TRACK DRIVE - LH (VTG90)

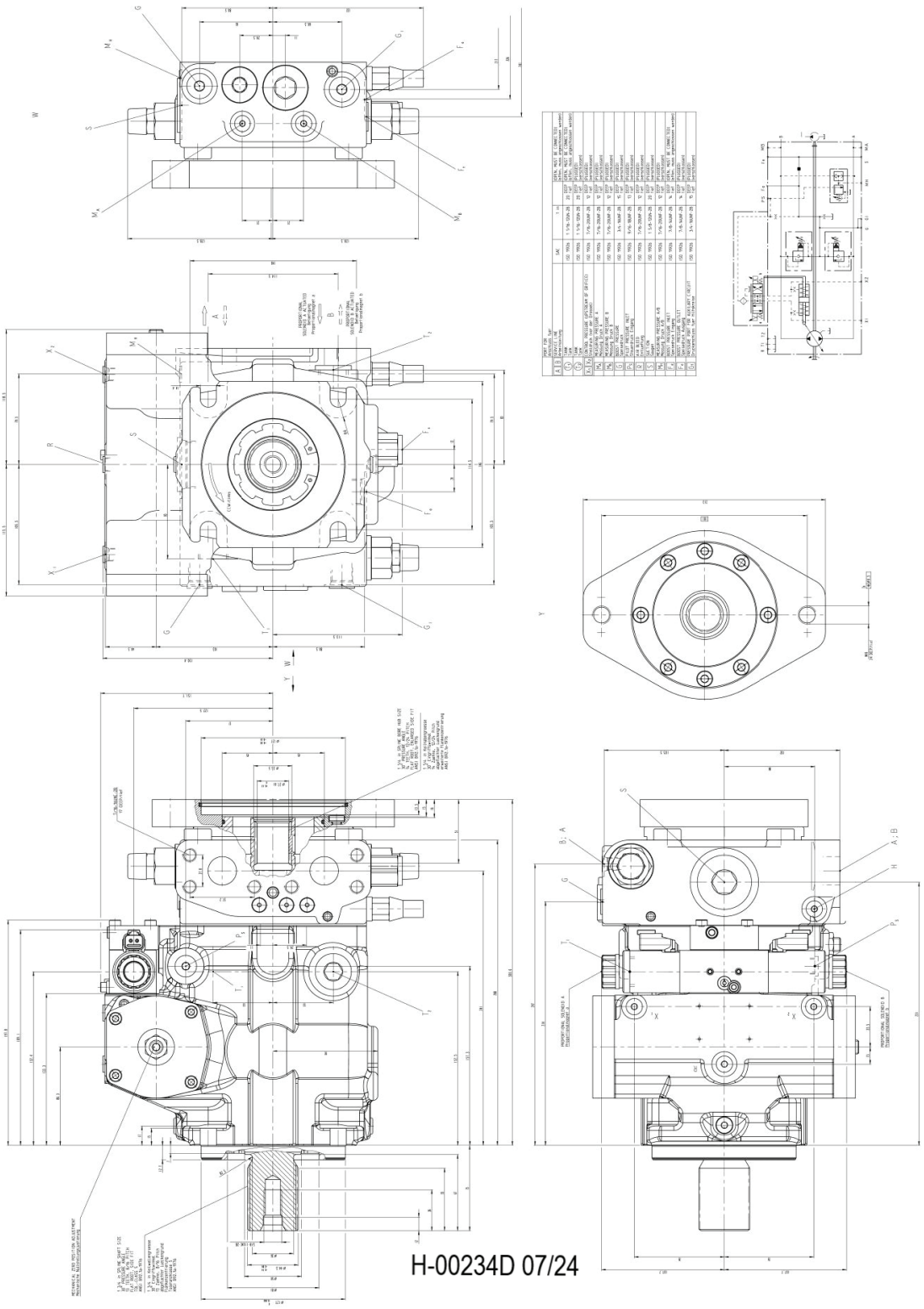

# H100-01421 - PUMP, TRACK DRIVE - LH (VTG90)

| Item | Part # | Description | Qty. |
|---|---|---|---|
| 1 | R902199506 | ROTARY GROUP | 1 |
| 2 | R902009059 | CONTROL | 1 |
| 3 | R902117112 | CONNECTION PLATE | 1 |
| 4 | R902244700 | BELL HOUSING | 1 |
| 5 | 53729 | VALVE, STROKE CONTROL - AA4VG90 24V | 1 |
| 6 | R902008951 | HOUSING | 1 |
| 7 | R902114380 | PIVOT PIN | 2 |
| 8 | R909405732 | POITIONING PIN | 1 |
| 9 | R909154480 | SCREW PLUG | 1 |
| 10 | R909153371 | SCREW PLUG | 1 |
| 11 | R909154478 | SCREW PLUG | 4 |
| 12 | R909083228 | SCREW PLUG | 1 |
| 13 | R909086731 | O-RING | 1 |
| 14 | R909083490 | SETSCREW | 2 |
| 15 | R909831318 | DOUBLE BREAK-OFF PLUG | 1 |
| 16 | R909156495 | NOZZLE | 2 |
| 17 | R913016373 | SLOTTED SPRING PIN | 2 |
| 18 | R909153364 | SCREW PLUG | 2 |
| 19 | R909153339 | SCREW PLUG | 1 |
| 20 | R909153418 | SCREW PLUG | 1 |
| 21 | R909153330 | O-RING | 1 |
| 22 | R909153338 | SCREW PLUG | 2 |
| 23 | R909156495 | NOZZLE | 1 |
| 24 | R902012117 | THREADED PART | 1 |

# H100-01423 - PUMP, TRACK DRIVE - LH (VTG90)

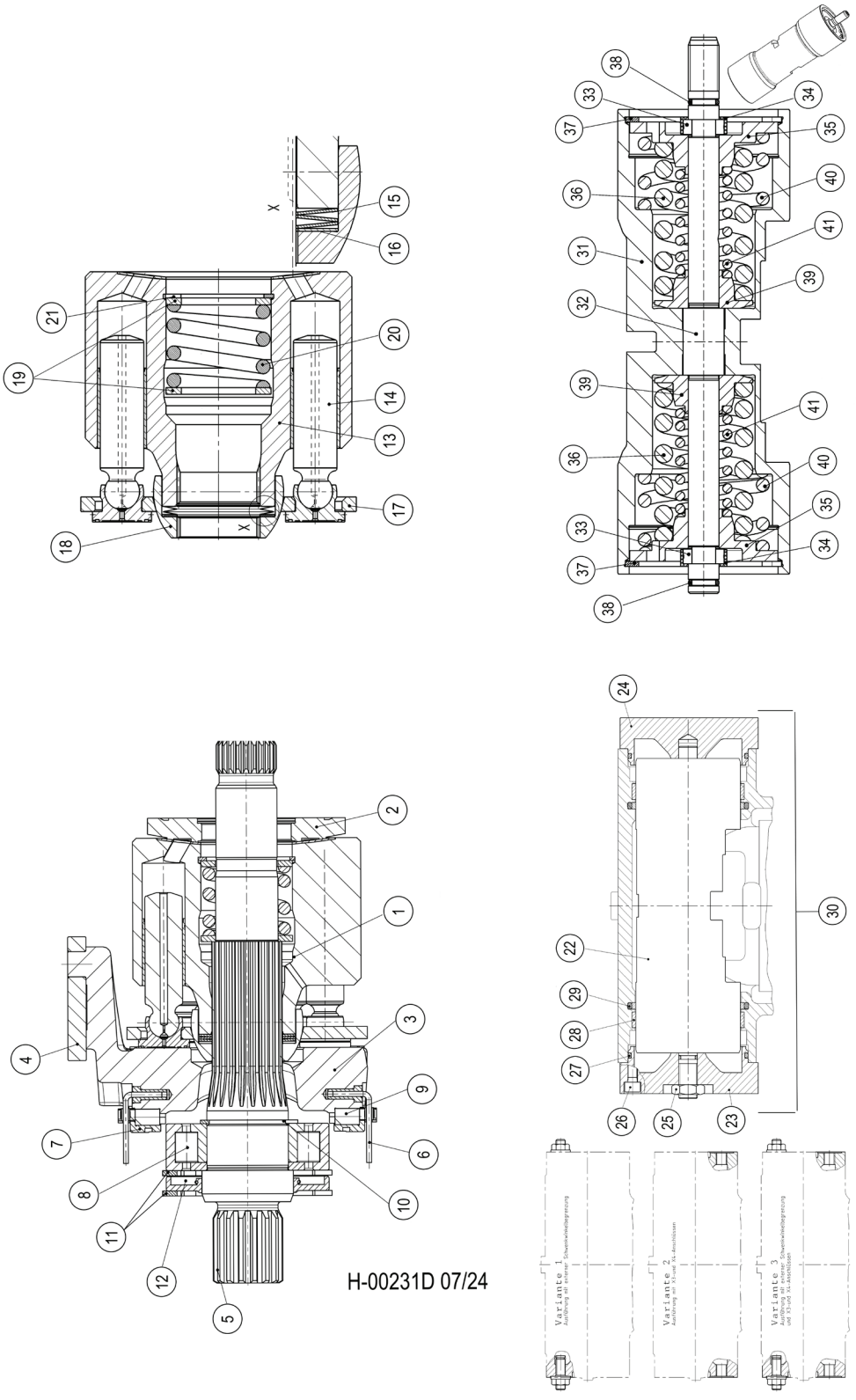

# H100-01423 - PUMP, TRACK DRIVE - LH (VTG90)

| Item | Part # | Description | Qty. |
|---|---|---|---|
| 1 | R902079223 | ROTARY GROUP | 1 |
| 2 | R902195224 | CONTROL PLATE, LEFT-HAND ROTATION | 1 |
| 3 | R902283514 | CRADLE | 1 |
| 4 | R909449810 | SLIDER | 1 |
| 5 | R909921550 | DRIVE SHAFT | 1 |
| 6 | R902188337 | WIRE | 2 |
| 7 | R913054564 | BEARING SHELL PAIR | 1 |
| 8 | R909153104 | CYL. ROLLER BEARING | 1 |
| 9 | R909830165 | CAGE PAIR | 1 |
| 10 | R909083362 | RETAINING RING | 1 |
| 11 | 53726 | RING, SNAP - SHAFT SEAL (AA4VG90) | 2 |
| 12 | 53727 | SEAL, SHAFT - TRACK DRIVE PUMP (AA4VG90) | 1 |
| 13 | R902252004 | CYLINDER | 1 |
| 14 | R909414515 | PISTON PAD | 9 |
| 15 | R902192958 | CUP-SPRING STACK | 1 |
| 16 | R909432983 | SHIM RING | 1 |
| * | R909432984 | SHIM RING | 1 |
| * | R909432985 | SHIM RING | 1 |
| * | R909432986 | SHIM RING | 1 |
| 17 | R902205455 | RETAINING PLATE | 1 |
| 18 | R902136991 | RETAINING BALL | 1 |
| 19 | R909449885 | WASHER | 2 |
| 20 | R909435649 | COMPRESSION SPRING | 1 |
| 21 | R909084556 | RETAINING RING | 1 |
| 22 | R902020313 | POSITIONING PISTON | 1 |
| 23 | R902004827 | COVER | 1 |
| 24 | R902004873 | COVER | 1 |
| 25 | R909154918 | HEXAGON NUT | 1 |

# H100-01424 - PUMP, TRACK DRIVE - LH (VTG90)

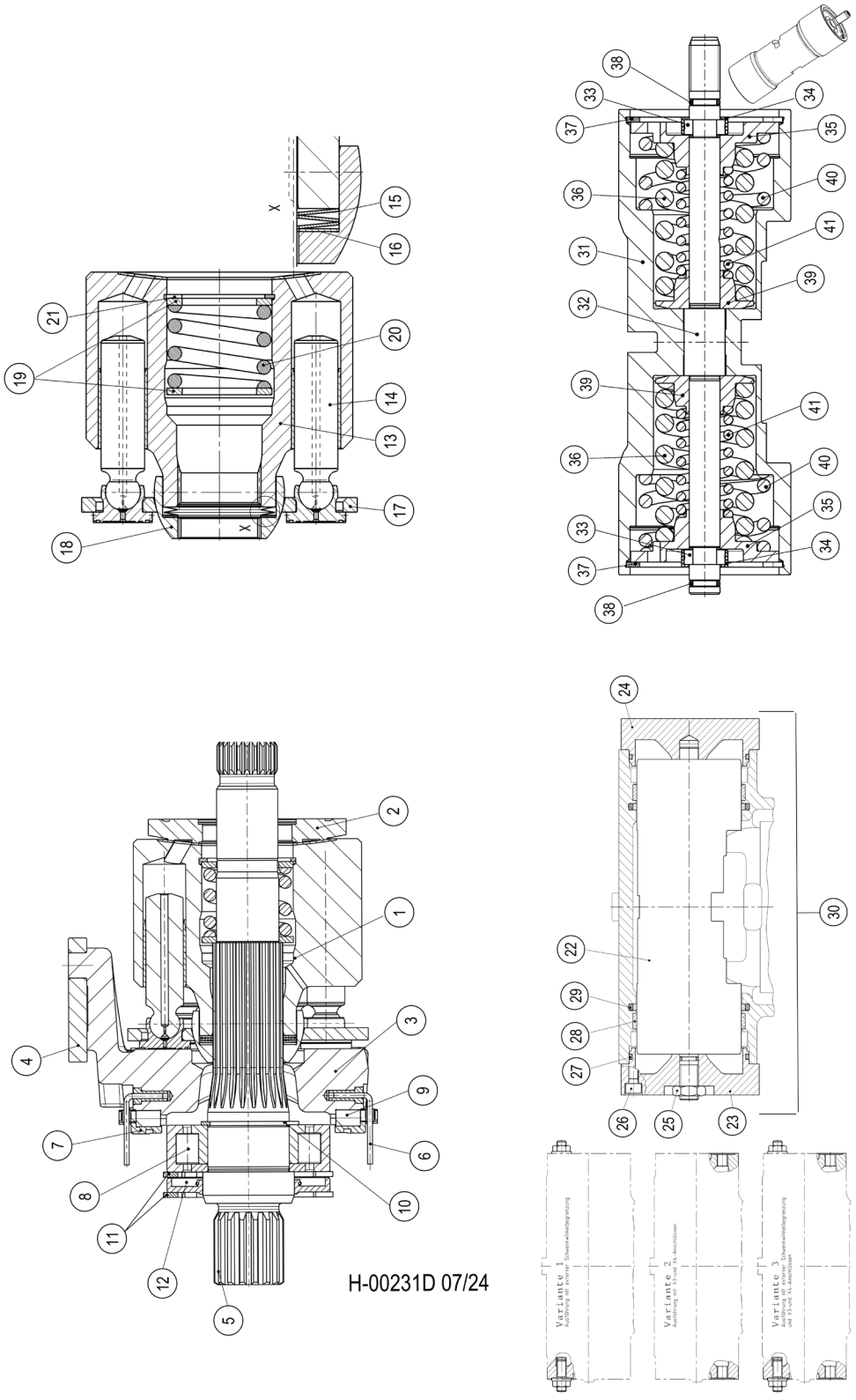

# H100-01424 - PUMP, TRACK DRIVE - LH (VTG90)

| Item | Part # | Description | Qty. |
|---|---|---|---|
| 26 | R909084744 | SOCKET HEAD CAP SCREW | 8 |
| 27 | R909084482 | O-RING | 2 |
| 28 | R902600837 | ROD GUIDANCE RING | 2 |
| 29 | R902600196 | ROD SEAL | 2 |
| 30 | R902002372 | SEAL KIT | 1 |
| 31 | R902192998 | POSITIONING PISTON | 1 |
| 32 | R902278029 | ROD | 1 |
| 33 | R902013493 | RING | 2 |
| * | R902015508 | RING | 2 |
| * | R902015509 | RING | 2 |
| * | R902015510 | RING | 2 |
| * | R902015511 | RING | 2 |
| * | R902015512 | RING | 2 |
| * | R902015513 | RING | 2 |
| * | R902015514 | RING | 2 |
| 34 | R902600489 | LOCATING RING | 2 |
| 35 | R902020101 | SPRING DISK | 2 |
| 36 | R909432979 | COMPRESSION SPRING | 2 |
| 37 | R902280445 | RETAINING RING | 2 |
| 38 | R909085709 | O-RING | 1 |
| 39 | R909449248 | SPRING DISK | 2 |
| 40 | **SEE DESCRIPTION** | CALL | 1 |
| 41 | **SEE DESCRIPTION** | CALL | 1 |

# H100-01425 - PUMP, TRACK DRIVE - LH (VTG90)

**NOTE: APPLY GREASE TO O-RINGS**

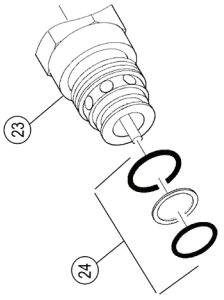


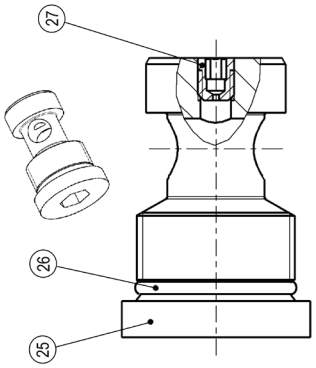


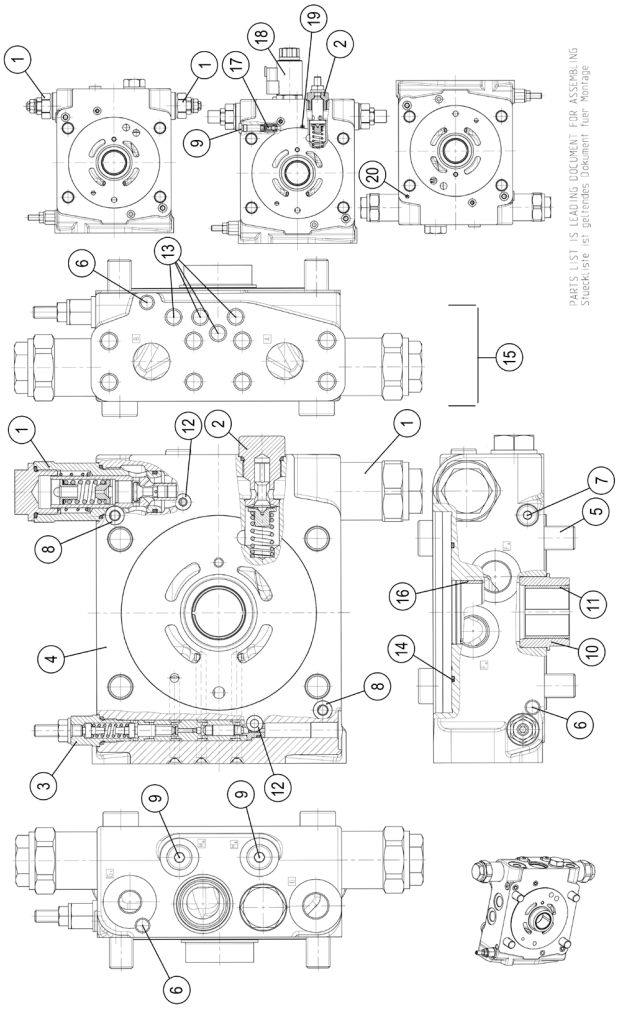


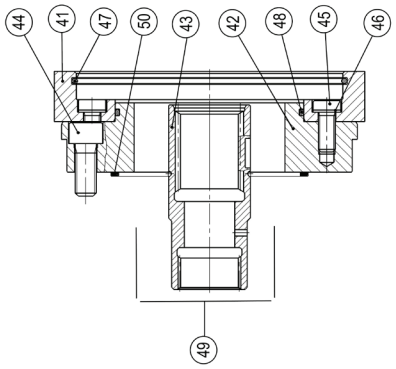


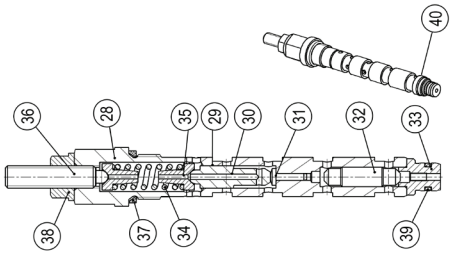


H-00232D 07/24

# H100-01425 - PUMP, TRACK DRIVE - LH (VTG90)

| Item | Part # | Description | Qty. |
|---|---|---|---|
| 1 | R902603814 | DELIVERY-VALVE ASSEMBLY | 2 |
| 2 | R902117188 | LOCKING SET | 1 |
| 3 | 53725 | CARTRIDGE, POR - AA4VTG90 | 1 |
| 4 | R902213222 | CONNECTION PLATE | 1 |
| 5 | R909083141 | SOCKET HEAD CAP SCREW | 4 |
| 6 | R909831318 | DOUBLE BREAK-OFF PLUG | 2 |
| 7 | R909153364 | SCREW PLUG | 1 |
| 8 | R909085709 | O-RING | 2 |
| 9 | R909154478 | SCREW PLUG | 2 |
| 10 | R909440537 | BUSHING | 1 |
| 11 | R902283572 | BUSHING | 1 |
| 12 | R909086498 | O-RING | 2 |
| 13 | R909831319 | DOUBLE BREAK-OFF PLUG | 2 |
| 14 | R909086679 | O-RING | 1 |
| 15 | R902002400 | SEAL KIT | 1 |
| 16 | **SEE DESCRIPTION** | **CALL** | - |
| 17 | **SEE DESCRIPTION** | **CALL** | - |
| 18 | **SEE DESCRIPTION** | **CALL** | - |
| 19 | **SEE DESCRIPTION** | **CALL** | - |
| 20 | **SEE DESCRIPTION** | **CALL** | - |
| 21 | 53724 | CARTRIDGE, RELIEF - MAIN AA4VTG90 | 1 |
| 22 | R961003396 | SEAL KIT | 1 |
| 23 | CALL | - | - |
| 24 | R902002411 | SEAL KIT | 1 |
| 25 | R909650430 | SCREW PLUG | 1 |
| 26 | R909083761 | O-RING | 1 |
| 27 | R909156494 | NOZZLE | 1 |
| 28 | R909432161 | SCREW PLUG | 1 |
| 29 | R909425951 | VALVE BUSHING | 1 |
| 30 | R909432162 | CONTROL PISTON | 1 |
| 31 | R909432163 | PISTON | 1 |
| 32 | R909432164 | VALVE SPOOL | 1 |
| 33 | R909436284 | VALVE SEAT | 1 |
| 34 | R902168277 | COMPRESSION SPRING | 1 |
| 35 | R902049851 | SPRING DISK | 2 |
| 36 | R909432167 | ADJUSTING SCREW | 1 |
| 37 | R909083752 | O-RING | 1 |
| 38 | R909152707 | SEALING NUT | 1 |
| 39 | R909086380 | O-RING | 1 |
| 40 | R902221226 | SEAL KIT | 1 |
| 41 | R902108263 | INTERMEDIATE FLANGE | 1 |
| 42 | R902077596 | PUMP COVER | 1 |
| 43 | 58356 | COUPLER, THRU DRIVE PUMP | 1 |
| 44 | R909083060 | SOCKET HEAD CAP SCREW | 4 |
| 45 | R909083190 | SOCKET HEAD CAP SCREW | 8 |
| 46 | R909152493 | SEAL RING | 8 |
| 47 | 19491 | O-RING | 1 |
| 48 | R909085360 | O-RING | 1 |

# H100-01426 - PUMP, TRACK DRIVE - LH (VTG90)

**NOTE: APPLY GREASE TO O-RINGS**

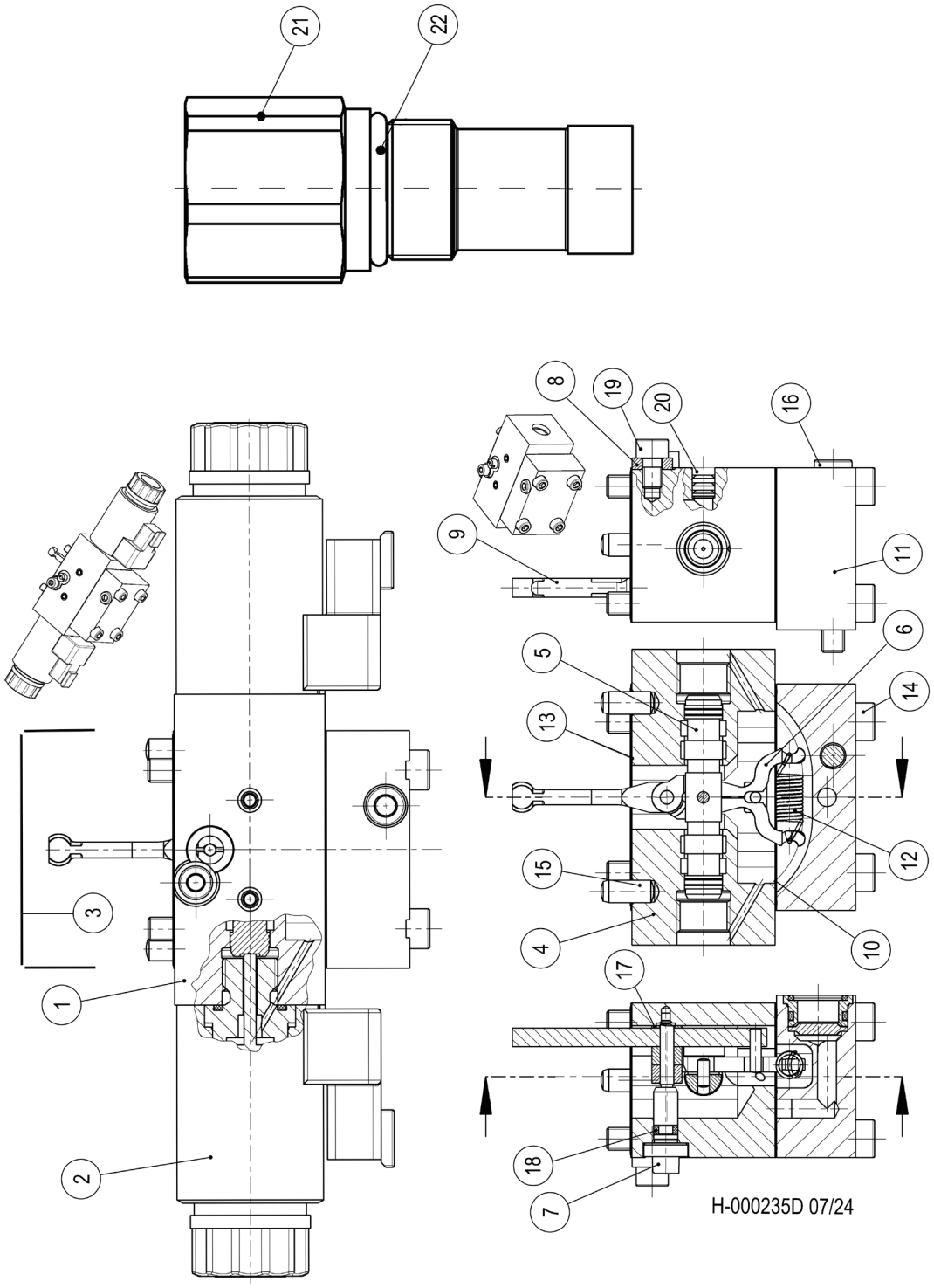

# H100-01426 - PUMP, TRACK DRIVE - LH (VTG90)

| Item | Part # | Description | Qty. |
|---|---|---|---|
| 1 | R902106746 | BASIC UNIT | 1 |
| 2 | 53730 | COIL, SOLENOID W/STEM - TRACK/WHEEL PUMP | 2 |
| 3 | R902002395 | SEAL KIT | 1 |
| 4 | R902254823 | HOUSING ASSEMBLY GROUP | 1 |
| 5 | R902107090 | CONTROL PISTON | 1 |
| 6 | R902162699 | LEVER PAIR | 1 |
| 7 | R902236102 | ECCENTRIC PIN | 1 |
| 8 | R902044854 | WASHER | 1 |
| 9 | R902113672 | FEEDBACK LEVER | 1 |
| 10 | R902603830 | SEAL | 1 |
| 11 | R902107492 | COVER | 1 |
| 12 | R902068150 | EXTENSION SPRING | 1 |
| 13 | R902603829 | SEAL | 1 |
| 14 | R909085831 | SOCKET HEAD CAP SCREW | 4 |
| 15 | R913009677 | STRAIGHT PIN | 2 |
| 16 | R909083027 | SOCKET HEAD CAP SCREW | 1 |
| 17 | R902051252 | WASHER | 1 |
| * | R902051253 | WASHER | 1 |
| * | R902051254 | WASHER | 1 |
| * | R902051255 | WASHER | 1 |
| * | R902051256 | WASHER | 1 |
| * | R902064222 | WASHER | 1 |
| 18 | R909086301 | O-RING | 1 |
| 19 | R902601243 | SOCKET HEAD CAP SCREW | |
| 20 | SEE DESCRIPTION | CALL | - |

# H100-01430 - PUMP, TRACK DRIVE - RH (VTG90)

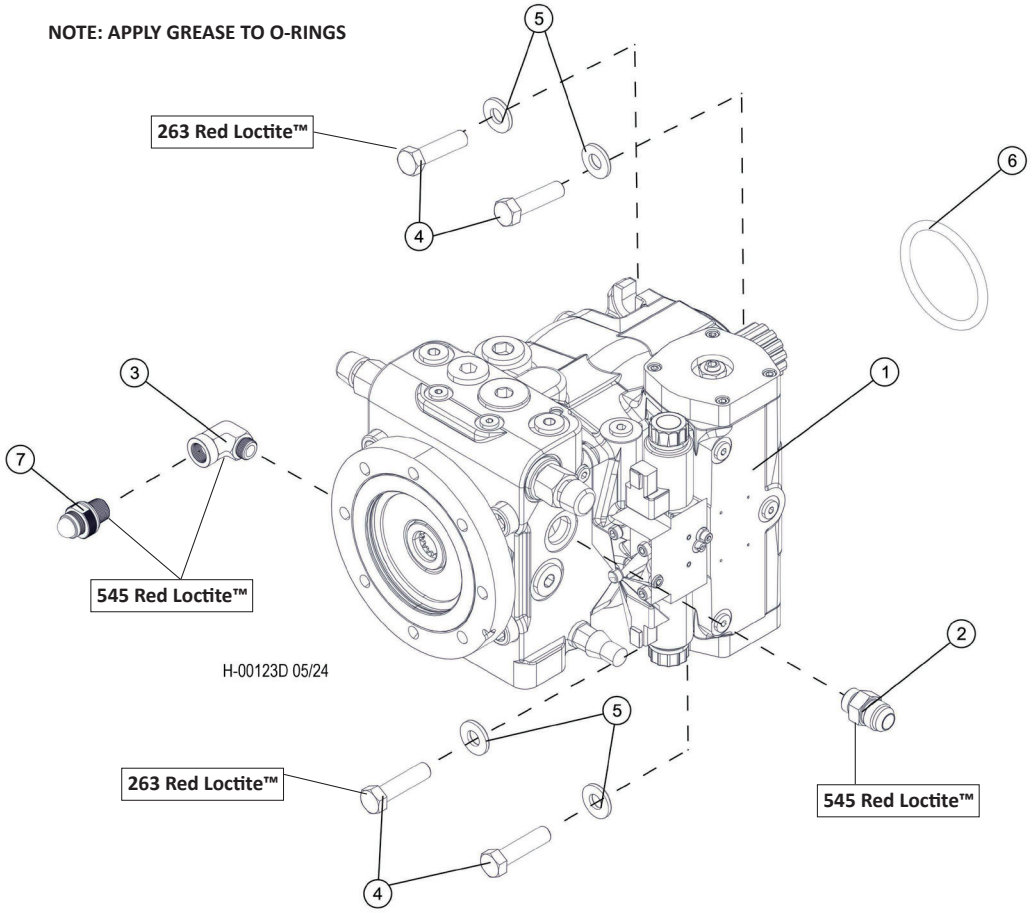


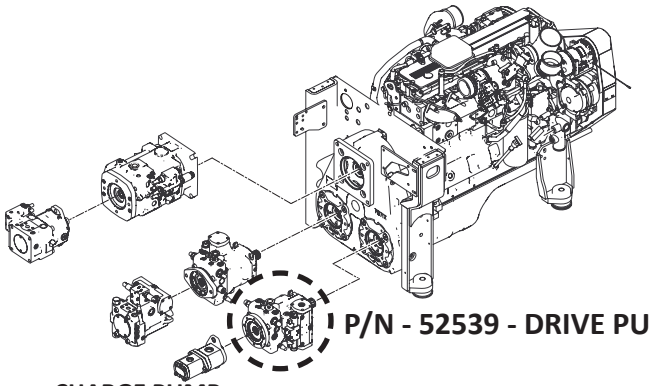


| Item | Part # | Description | Qty. |
|---|---|---|---|
| 1 | 52539 | PUMP, TRACK DRIVE (RH) VTG90 | 1 |
| 2 | 15494 | CONNECTOR, STR - 6400-12-10 **545 RED LOCTITE™** | 1 |
| 3 | 57641 | FITTING, EBLOW - FEMALE 4-AOEG5-S **545 RED LOCTITE™** | 1 |
| 4 | 50100 | BOLT - .5” X 1.25” **263 RED LOCTITE™** | 4 |
| 5 | 15534 | WASHER, SAE FLAT - .5” | 4 |
| 6 | 53718 | ORING, TRACK DRIVE PUMP PILOT | 1 |
| 7 | 57819 | TAP, GAUGE PORT - #4 SAE ORING BOSS- ST **545 RED LOCTITE™** | 1 |

# H100-01431 - PUMP, TRACK DRIVE - RH (VTG90)

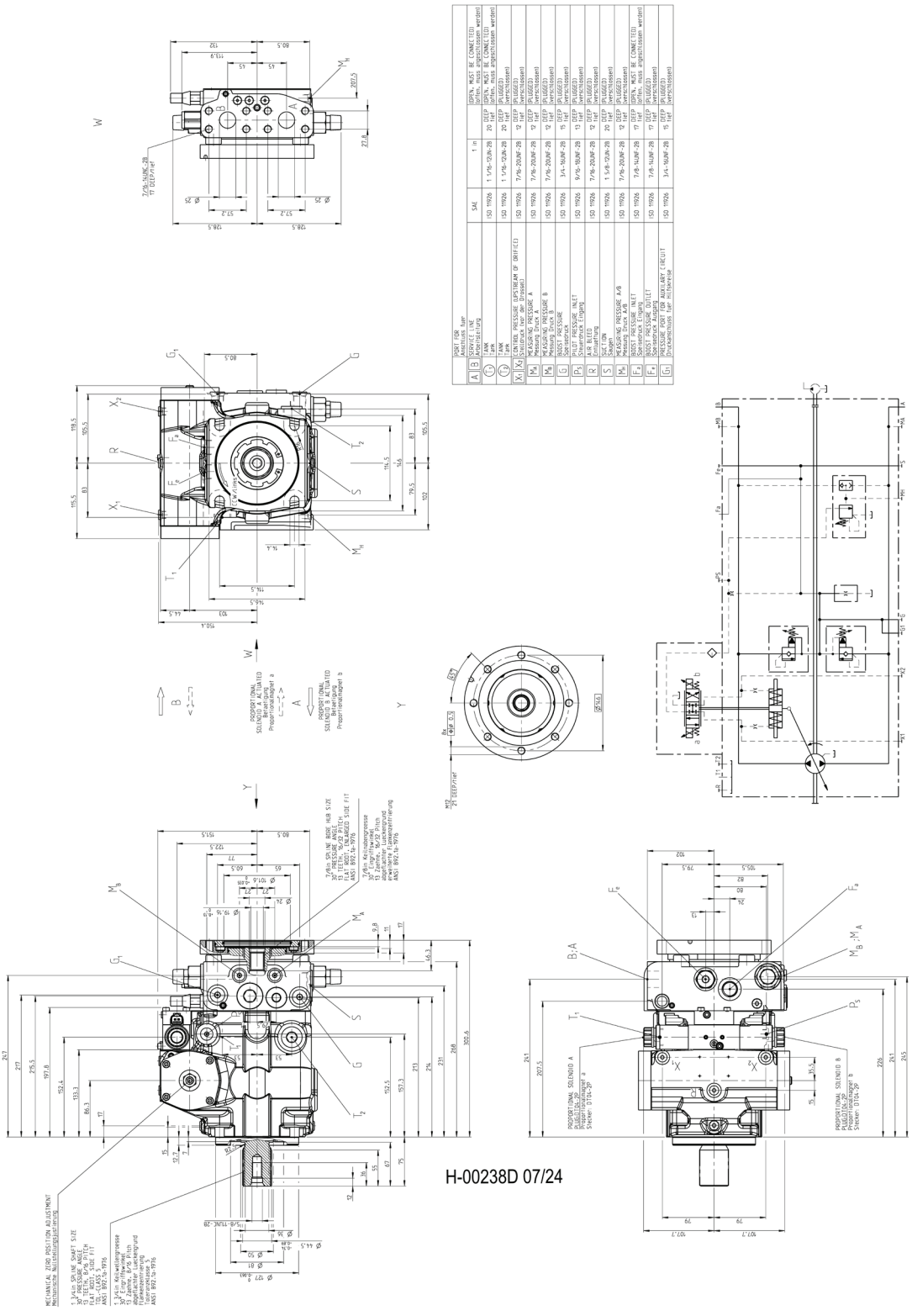

H-00238D 07/24

# H100-01431 - PUMP, TRACK DRIVE - RH (VTG90)

| Item | Part # | Description | Qty. |
|---|---|---|---|
| 1 | R902199506 | ROTARY GROUP | 1 |
| 2 | R902009059 | CONTROL | 1 |
| 3 | R902131396 | CONNECTION PLATE | 1 |
| 4 | R902036109 | BELL HOUSING | 1 |
| 5 | 53729 | VALVE, STROKE CONTROL - AA4VG90 24V | 1 |
| 6 | R902131389 | HOUSING | 1 |
| 7 | R902114380 | PIVOT PIN | 2 |
| 8 | R909405732 | POITIONING PIN | 1 |
| 9 | R909154480 | SCREW PLUG | 1 |
| 10 | R909153371 | SCREW PLUG | 1 |
| 11 | R909154478 | SCREW PLUG | 4 |
| 12 | R909083228 | SCREW PLUG | 1 |
| 13 | R909086731 | O-RING | 1 |
| 14 | R909083490 | SETSCREW | 2 |
| 15 | R909831318 | DOUBLE BREAK-OFF PLUG | 1 |
| 16 | R909156495 | NOZZLE | 2 |
| 17 | R913016373 | SLOTTED SPRING PIN | 2 |
| 18 | R909153364 | SCREW PLUG | 2 |
| 19 | R909153339 | SCREW PLUG | 1 |
| 20 | R909153418 | SCREW PLUG | 1 |
| 21 | R909153330 | O-RING | 1 |
| 22 | R909153338 | SCREW PLUG | 2 |
| 23 | R909156495 | NOZZLE | 1 |
| 24 | R902012117 | THREADED PART | 1 |

# H100-01432 - PUMP, TRACK DRIVE - RH (VTG90)

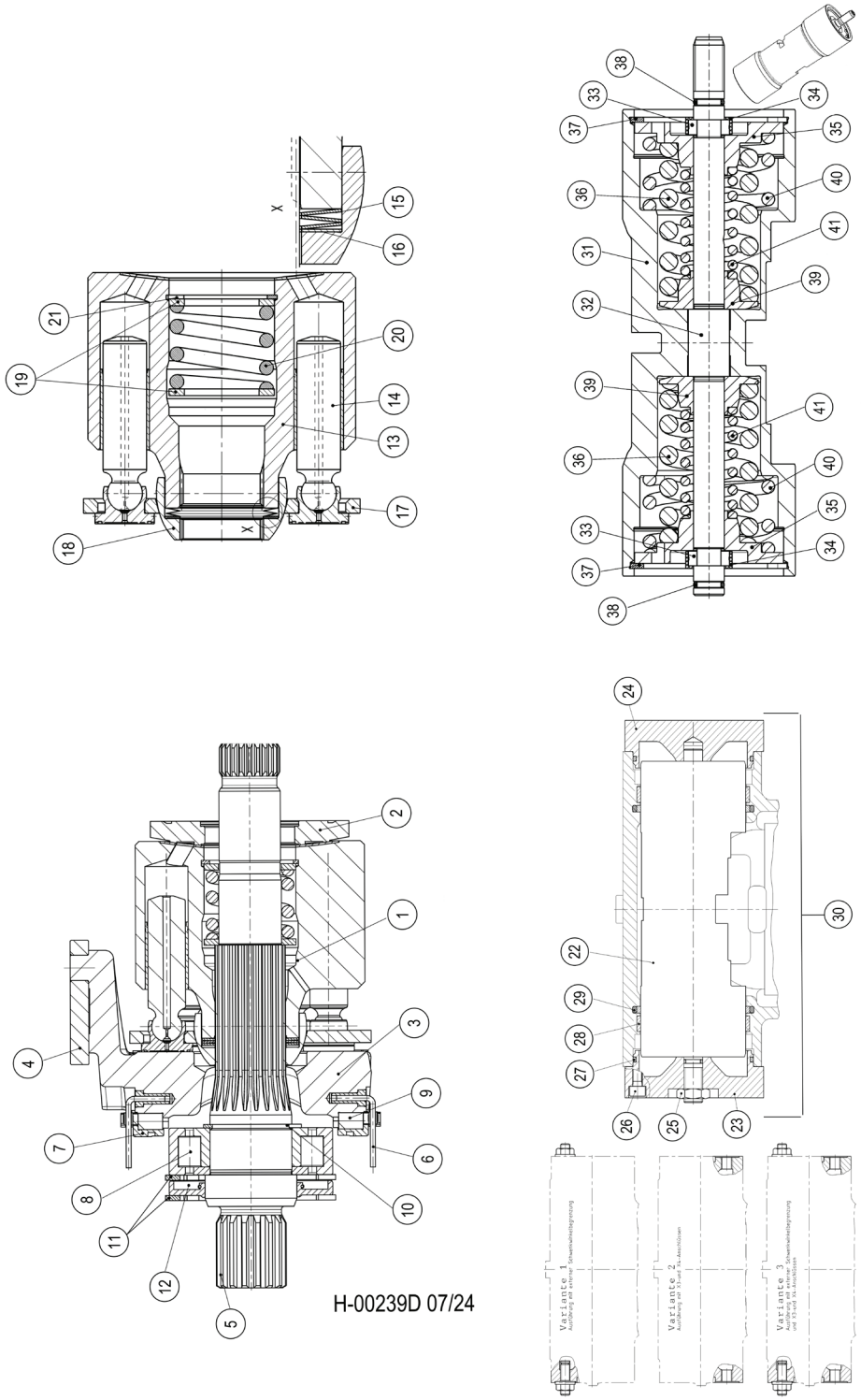

# H100-01432 - PUMP, TRACK DRIVE - RH (VTG90)

| Item | Part # | Description | Qty. |
|---|---|---|---|
| 1 | R902079223 | ROTARY GROUP | 1 |
| 2 | R902195224 | CONTROL PLATE, LEFT-HAND ROTATION | 1 |
| 3 | R902283514 | CRADLE | 1 |
| 4 | R909449810 | SLIDER | 1 |
| 5 | R909921550 | DRIVE SHAFT | 1 |
| 6 | R902188337 | WIRE | 2 |
| 7 | R913054564 | BEARING SHELL PAIR | 1 |
| 8 | R909153104 | CYL. ROLLER BEARING | 1 |
| 9 | R909830165 | CAGE PAIR | 1 |
| 10 | R909083362 | RETAINING RING | 1 |
| 11 | 53726 | RING, SNAP - SHAFT SEAL (AA4VG90) | 2 |
| 12 | 53727 | SEAL, SHAFT - TRACK DRIVE PUMP (AA4VG90) | 1 |
| 13 | R902252004 | CYLINDER | 1 |
| 14 | R909414515 | PISTON PAD | 9 |
| 15 | R902192958 | CUP-SPRING STACK | 1 |
| 16 | R909432983 | SHIM RING | 1 |
| * | R909432984 | SHIM RING | 1 |
| * | R909432985 | SHIM RING | 1 |
| * | R909432986 | SHIM RING | 1 |
| 17 | R902205455 | RETAINING PLATE | 1 |
| 18 | R902136991 | RETAINING BALL | 1 |
| 19 | R909449885 | WASHER | 2 |
| 20 | R909435649 | COMPRESSION SPRING | 1 |

# H100-01433 - PUMP, TRACK DRIVE - RH (VTG90)

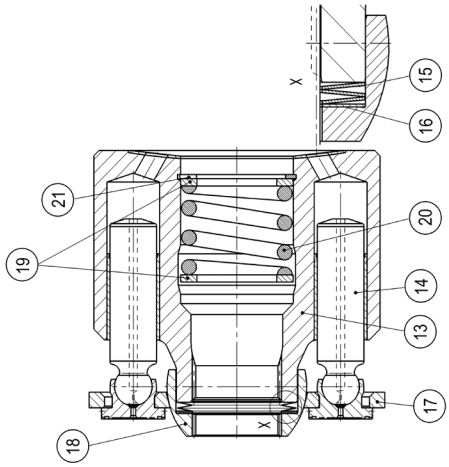


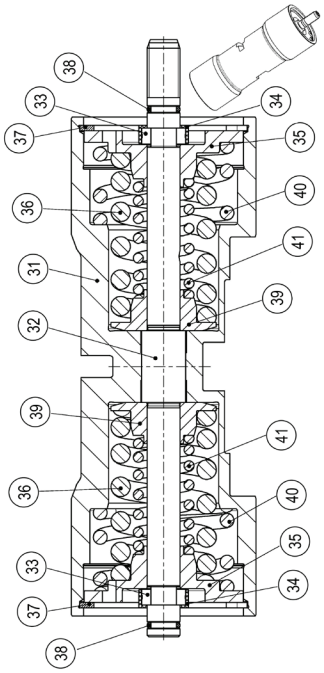


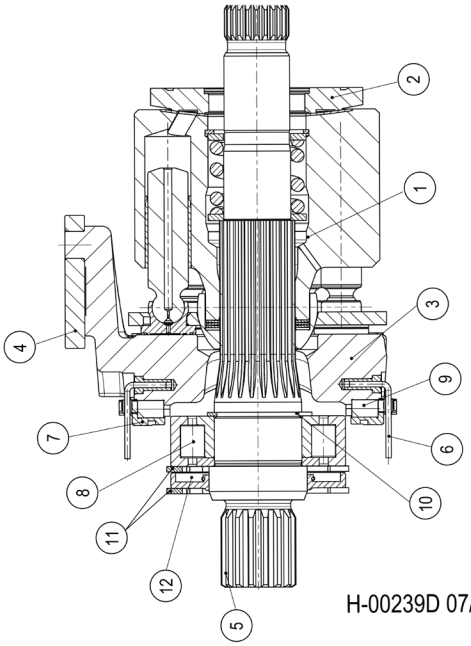


H-00239D 07/24

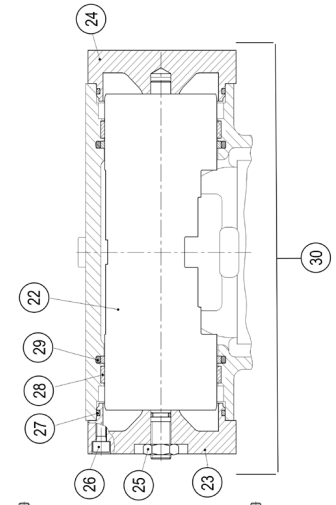


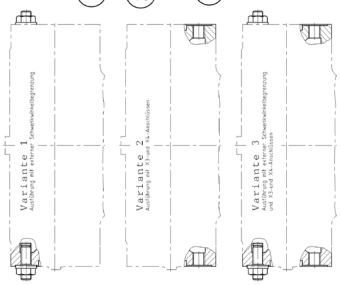

# H100-01433 - PUMP, TRACK DRIVE - RH (VTG90)

| Item | Part # | Description | Qty. |
|---|---|---|---|
| 21 | R909084556 | RETAINING RING | 1 |
| 22 | R902020313 | POSITIONING PISTON | 1 |
| 23 | R902004827 | COVER | 1 |
| 24 | R902004873 | COVER | 1 |
| 25 | R909154918 | HEXAGON NUT | 1 |
| 26 | R909084744 | SOCKET HEAD CAP SCREW | 8 |
| 27 | R909084482 | O-RING | 2 |
| 28 | R902600837 | ROD GUIDANCE RING | 2 |
| 29 | R902600196 | ROD SEAL | 2 |
| 30 | R902002372 | SEAL KIT | 1 |
| 31 | R902192998 | POSITIONING PISTON | 1 |
| 32 | R902278029 | ROD | 1 |
| 33 | R902013493 | RING | 2 |
| * | R902015508 | RING | 2 |
| * | R902015509 | RING | 2 |
| * | R902015510 | RING | 2 |
| * | R902015511 | RING | 2 |
| * | R902015512 | RING | 2 |
| * | R902015513 | RING | 2 |
| * | R902015514 | RING | 2 |
| 34 | R902600489 | LOCATING RING | 2 |
| 35 | R902020101 | SPRING DISK | 2 |
| 36 | R909432979 | COMPRESSION SPRING | 2 |
| 37 | R902280445 | RETAINING RING | 2 |
| 38 | R909085709 | O-RING | 1 |
| 39 | R909449248 | SPRING DISK | 2 |
| 40 | **SEE DESCRIPTION** | - | 1 |
| 41 | **SEE DESCRIPTION** | - | 1 |

# H100-01434 - PUMP, TRACK DRIVE - RH (VTG90)

**NOTE: APPLY GREASE TO O-RINGS**

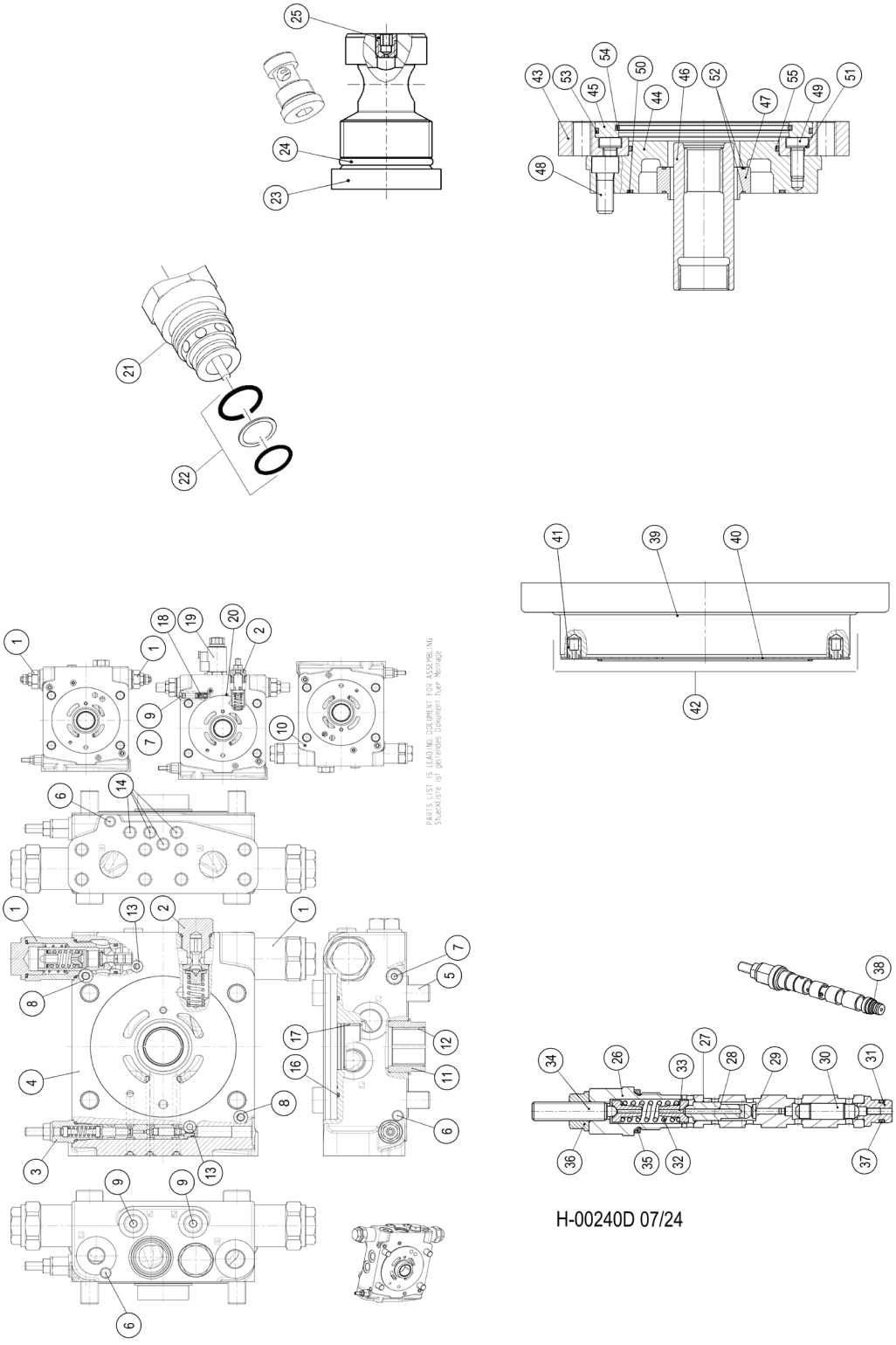

# H100-01434 - PUMP, TRACK DRIVE - RH (VTG90)

| Item | Part # | Description | Qty. |
|---|---|---|---|
| 1 | R902603814 | DELIVERY-VALVE ASSEMBLY | 2 |
| 2 | R902117188 | LOCKING SET | 1 |
| 3 | 53725 | CARTRIDGE, POR - AA4VTG90 | 1 |
| 4 | R902131398 | CONNECTION PLATE | 1 |
| 5 | R909083141 | SOCKET HEAD CAP SCREW | 4 |
| 6 | R909831318 | DOUBLE BREAK-OFF PLUG | 2 |
| 7 | R909153364 | SCREW PLUG | 1 |
| 8 | R909085709 | O-RING | 2 |
| 9 | R909154478 | SCREW PLUG | 2 |
| 10 | R902603506 | SLOTTED SPRING PIN | 1 |
| 11 | R909440537 | BUSHING | 1 |
| 12 | R902283572 | BUSHING | 1 |
| 13 | R909086498 | O-RING | 2 |
| 14 | R909831319 | DOUBLE BREAK-OFF PLUG | 2 |
| 15 | R909086679 | O-RING | 1 |
| 16 | R902002400 | SEAL KIT | 1 |
| 17 | **SEE DESCRIPTION** | CALL | - |
| 18 | **SEE DESCRIPTION** | CALL | - |
| 19 | **SEE DESCRIPTION** | CALL | - |
| 20 | **SEE DESCRIPTION** | CALL | - |
| 21 | 53724 | CARTRIDGE, RELIEF - MAIN AA4VTG90 | 1 |
| 22 | R961003396 | SEAL KIT | 1 |
| 23 | R909650430 | SCREW PLUG | 1 |
| 24 | R909083761 | O-RING | 1 |
| 25 | R909156494 | NOZZLE | 1 |

# H100-01435 - PUMP, TRACK DRIVE - RH (VTG90)

**NOTE: APPLY GREASE TO O-RINGS**

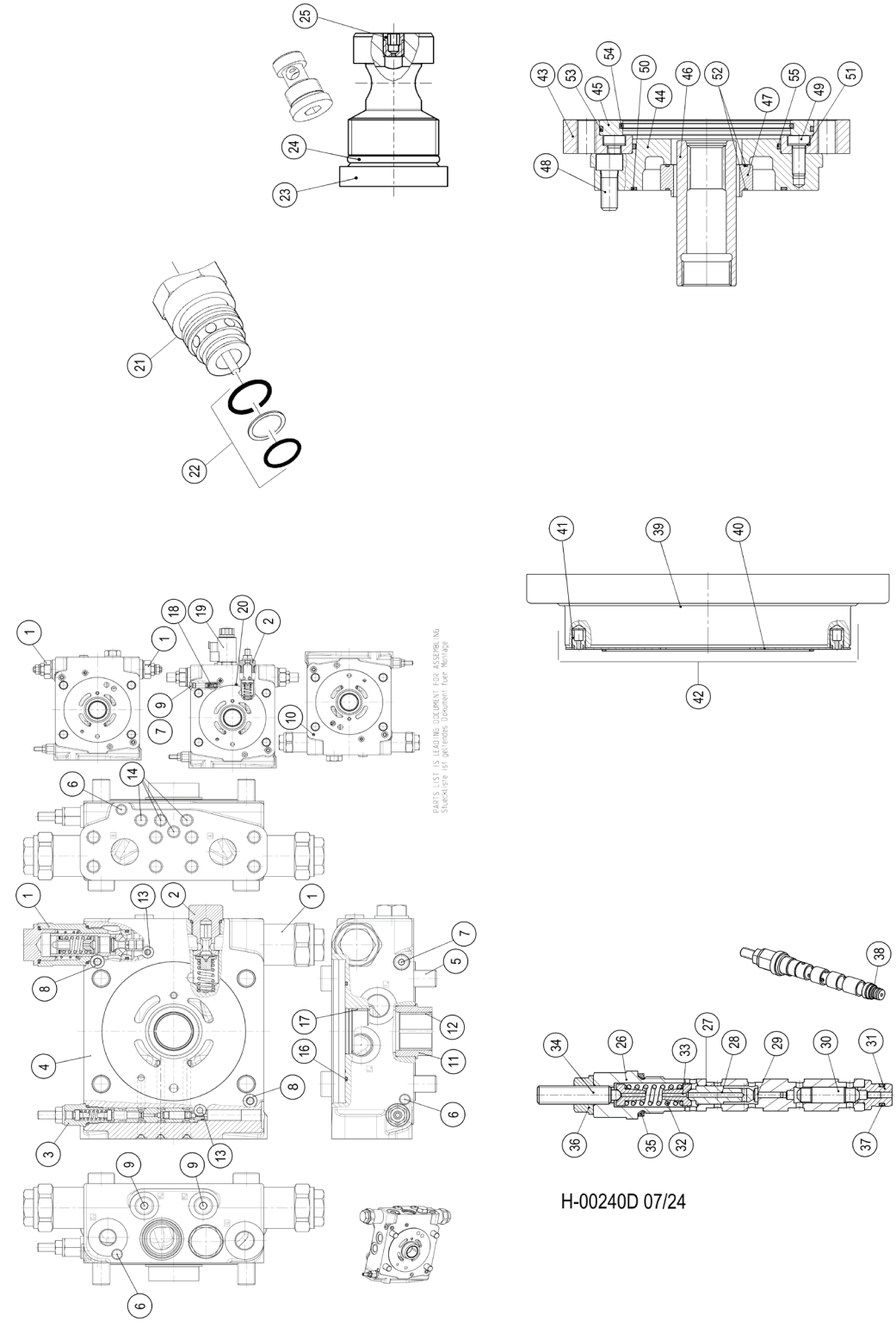


H-00240D 07/24

# H100-01435 - PUMP, TRACK DRIVE - RH (VTG90)

| Item | Part # | Description | Qty. |
|---|---|---|---|
| 26 | R909432161 | SCREW PLUG | 1 |
| 27 | R909425951 | VALVE BUSHING | 1 |
| 28 | R909432162 | CONTROL PISTON | 1 |
| 29 | R909432163 | PISTON | 1 |
| 30 | R909432164 | VALVE SPOOL | 1 |
| 31 | R909436284 | VALVE SEAT | 1 |
| 32 | R902168277 | COMPRESSION SPRING | 1 |
| 33 | R902049851 | SPRING DISK | 2 |
| 34 | R909432167 | ADJUSTING SCREW | 1 |
| 35 | R909083752 | O-RING | 1 |
| 36 | R909152707 | SEALING NUT | 1 |
| 37 | R909086380 | O-RING | 1 |
| 38 | R902221226 | SEAL KIT | 1 |
| 39 | R902079044 | BELL HOUSING | 1 |
| 40 | R902278082 | WEAR PLATE | 1 |
| 41 | R913007069 | HOLDING PLUG | 2 |
| 42 | R902002412 | SEAL KIT | 1 |
| 43 | R909444589 | FLANGE | 1 |
| 44 | R902077958 | HOUSING | 1 |
| 45 | R909431554 | LOCATING RING | 1 |
| 46 | R902084926 | THROUGH DRIVE COUPLING | 1 |
| 47 | R909430651 | SEAL RING | 1 |
| 48 | R909083060 | SOCKET HEAD CAP SCREW | 4 |
| 49 | R909083189 | SOCKET HEAD CAP SCREW | 6 |
| 50 | R909086679 | O-RING | 1 |
| 51 | R909152493 | SEAL RING | 6 |
| 52 | R909084484 | O-RING | 2 |
| 53 | R909085363 | O-RING | 1 |
| 54 | 20373 | O-RING, CHARGE PUMP PILOT (AA4VG125) | 1 |
| 55 | R909085360 | O-RING | 1 |

# H100-01436 - PUMP, TRACK DRIVE - RH (VTG90)

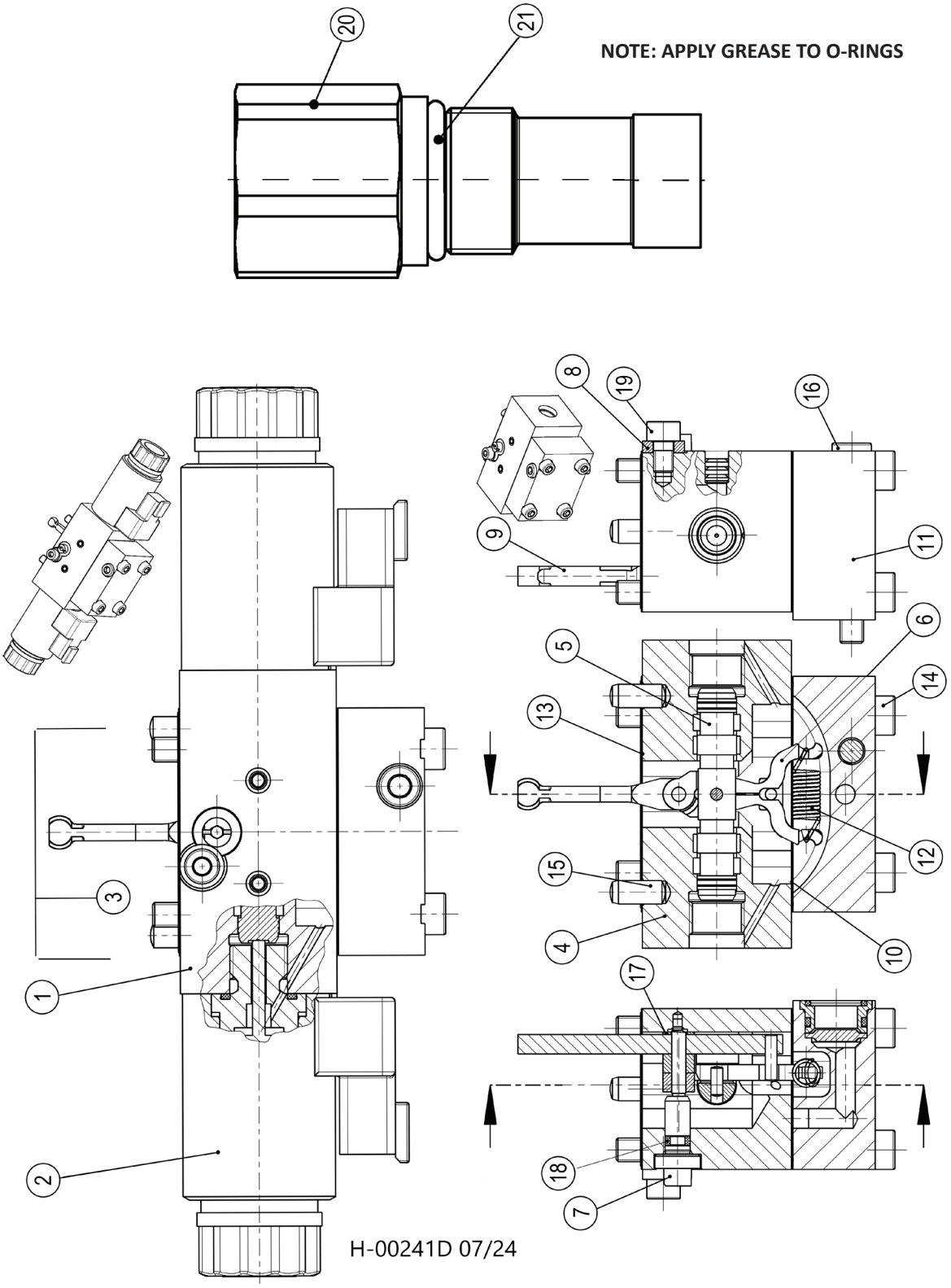

# H100-01436 - PUMP, TRACK DRIVE - RH (VTG90)

| Item | Part # | Description | Qty. |
|---|---|---|---|
| 1 | R902106746 | BASIC UNIT | 1 |
| 2 | 53730 | COIL, SOLENOID W/STEM - TRACK/WHEEL PUMP | 1 |
| 3 | R902002395 | SEAL KIT | 1 |
| 4 | R902254823 | HOUSING ASSEMBLY GROUP | 1 |
| 5 | R902107090 | CONTROL PISTON | 1 |
| 6 | R902162699 | LEVER PAIR | 1 |
| 7 | R902236102 | ECCENTRIC PIN | 1 |
| 8 | R902044854 | WASHER | 1 |
| 9 | R902113672 | FEEDBACK LEVER | 1 |
| 10 | R902603830 | SEAL | 1 |
| 11 | R902107492 | COVER | 1 |
| 12 | R902068150 | EXTENSION SPRING | 1 |
| 13 | R902603829 | SEAL | 1 |
| 14 | R909085831 | SOCKET HEAD CAP SCREW | 4 |
| 15 | R913009677 | STRAIGHT PIN | 2 |
| 16 | R909083027 | SOCKET HEAD CAP SCREW | 1 |
| 17 | R902051252 | WASHER | 1 |
| * | R902051253 | WASHER | 1 |
| * | R902051254 | WASHER | 1 |
| * | R902051255 | WASHER | 1 |
| * | R902051256 | WASHER | 1 |
| * | R902064222 | WASHER | 1 |
| 18 | R909086301 | O-RING | 1 |
| 19 | R902601243 | O-RING | 1 |
| 20 | R902012092 | LOCKING PIECE | 1 |
| 21 | R909083758 | O-RING | 1 |

# H100-01440 - PUMP, TRACK DRIVE COMPONENTS (VTG90)

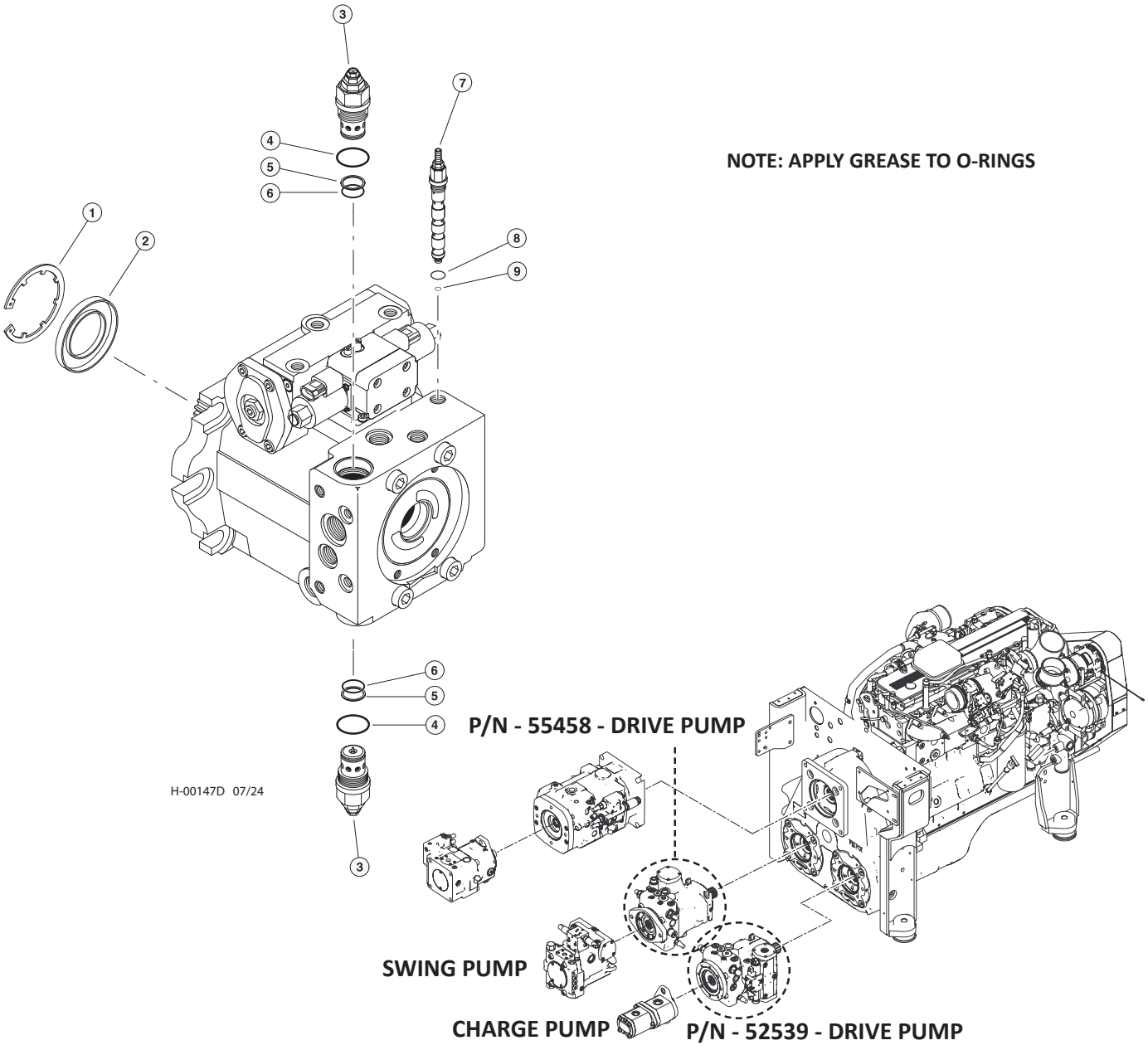


| Item | Part # | Description | Qty. |
|---|---|---|---|
| | 55458 | PUMP, TRACK DRIVE - (LH) VTG90 | 1 |
| | 52539 | PUMP, TRACK DRIVE - (RH) VTG90 | 1 |
| 1 | 53726 | RING, SEAL RETAINING | 1 |
| 2 | 53727 | SEAL, SHAFT | 1 |
| 3 | 53724 | CARTRIDGE, HIGH PRESSURE RELIEF VALVE | 2 |
| 4 | **SEE DESCRIPTION** | O-RING, HPRV CARTRIDGE (BODY) (**CALL)** | 2 |
| 5 | **SEE DESCRIPTION** | RING, BACK-UP - HPRV CARTRIDGE (CHAMBER) (**CALL)** | 5 |
| 6 | **SEE DESCRIPTION** | O-RING, HPRV CARTRIDGE (CHAMBER) (**CALL)** | 2 |
| 7 | 53725 | CARTRIDGE, POR RELIEF VALVE | 1 |
| 8 | **SEE DESCRIPTION** | O-RING, POR RELIEF VALVE CARTRIDGE (BODY) (**CALL)** | 1 |
| 9 | **SEE DESCRIPTION** | O-RING, POR RELIEF VALVE CARTRIDGE (CHAMBER) (**CALL)** | 1 |
| | 53640 | KIT, SEAL REPAIR -TRACK DRIVE PUMP-VTG90 | 1 |

# H100-01441 - PUMP, TRACK DRIVE COMPONENTS (VTG90)

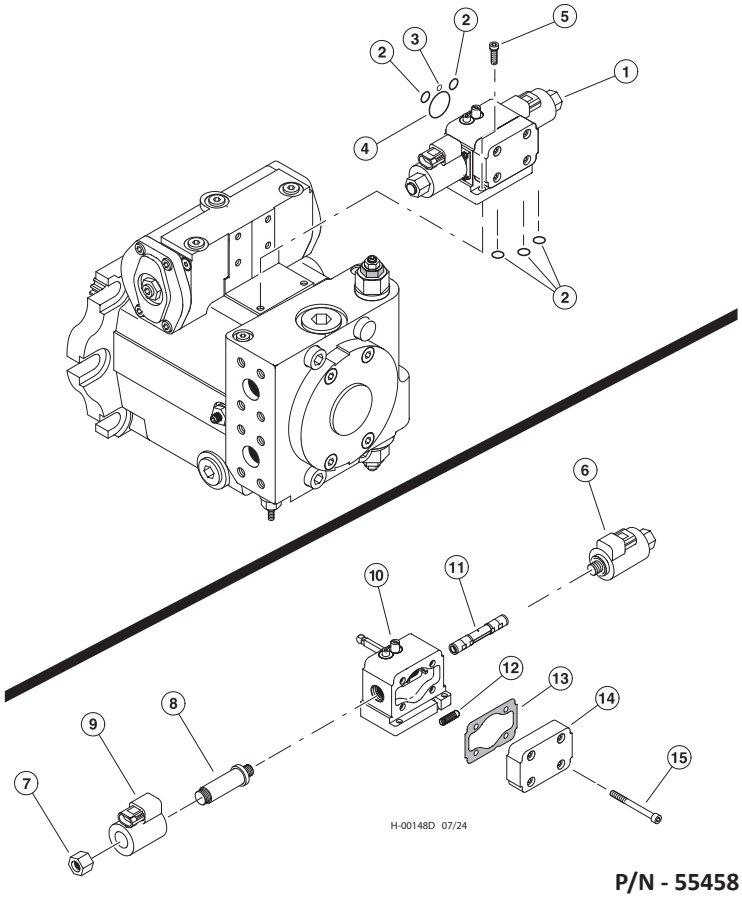


**NOTE: APPLY GREASE TO O-RINGS**

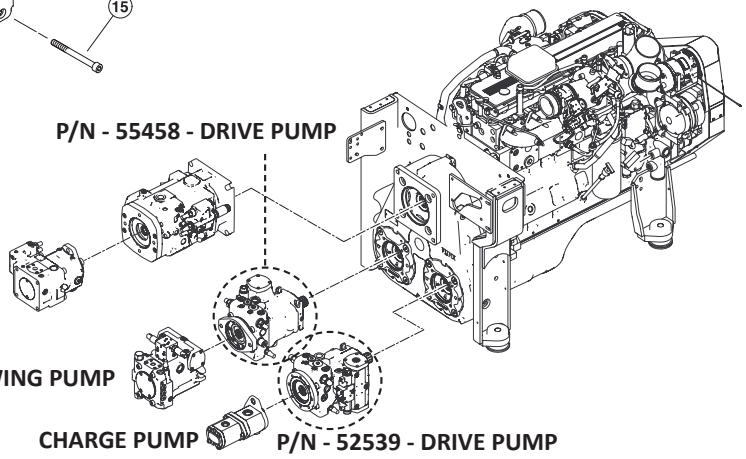


| Item | Part # | Description | Qty. |
|---|---|---|---|
| | 55458 | PUMP, TRACK DRIVE - (LH) VTG90 | 1 |
| | 52539 | PUMP, TRACK DRIVE - (RH) VTG90 | 1 |
| 1 | 53729 | VALVE, STROKE CONTROL | 1 |
| 2 | **SEE DESCRIPTION** | O-RING, STROKE CONTROL **(CALL)** | 5 |
| 3 | **SEE DESCRIPTION** | O-RING, STROKE CONTROL **(CALL)** | 1 |
| 4 | **SEE DESCRIPTION** | O-RING, STROKE CONTROL **(CALL)** | 1 |
| 5 | 53730 | BOLT, ALLEN HEAD - 6MM X 20MM | 2 |
| 6 | **SEE DESCRIPTION** | SOLENOID, CONTROL ASSEMBLY - AA4VG90 **(CALL)** | 2 |
| 7 | **SEE DESCRIPTION** | NUT, COIL STEM **(CALL)** | 2 |
| 8 | **SEE DESCRIPTION** | COIL STEM **(CALL)** | 2 |
| 9 | **SEE DESCRIPTION** | COIL, SOLENOID - 24V **(CALL)** | 2 |
| 10 | **SEE DESCRIPTION** | CONTROL MODULE - AA4VG90 24V (R902106746) **(CALL)** | 1 |
| 11 | **SEE DESCRIPTION** | CONTROL PISTON (R902107090) **(CALL)** | 1 |
| 12 | **SEE DESCRIPTION** | SPRING, STROKE CENTERING (R902068150) **(CALL)** | 1 |
| 13 | **SEE DESCRIPTION** | GASKET, (R902066611) **(CALL)** | 1 |
| 14 | **SEE DESCRIPTION** | COVER, (R902107492) v | 1 |
| 15 | **SEE DESCRIPTION** | BOLT, ALLEN HEAD - 6MM (R909085831) **(CALL)** | 4 |
| | 53640 | KIT, SEAL REPAIR -TRACK DRIVE PUMP-VTG90 | 1 |

# H100-01442 - PUMP, TRACK DRIVE COMPONENTS (VTG90)

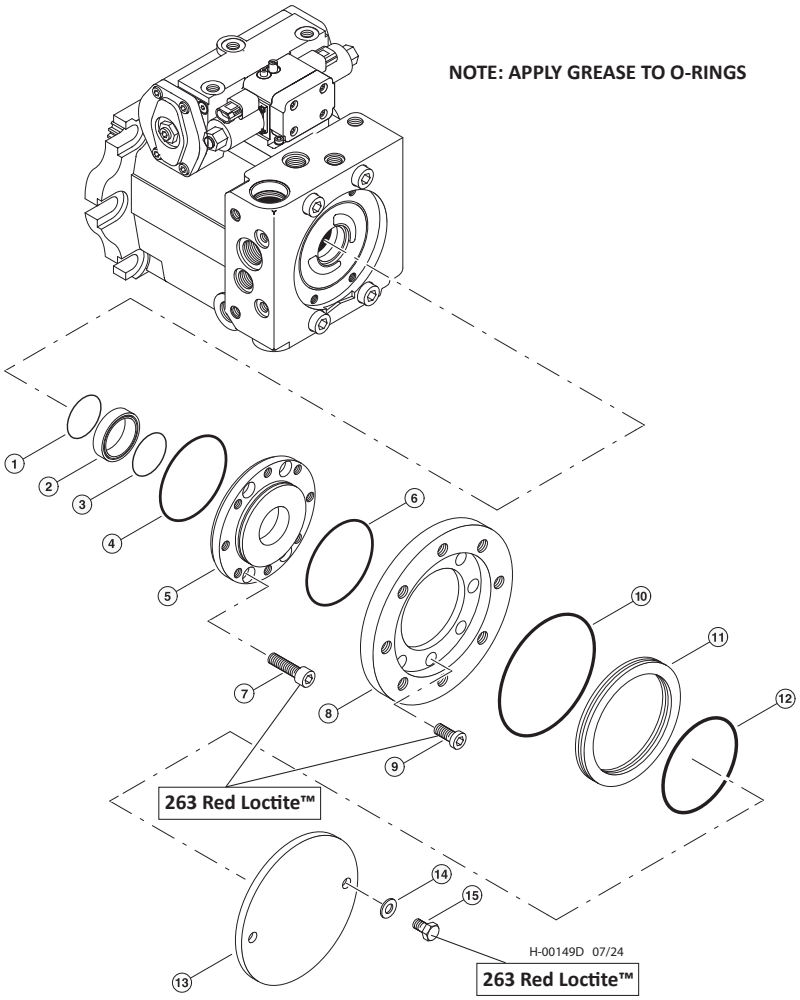


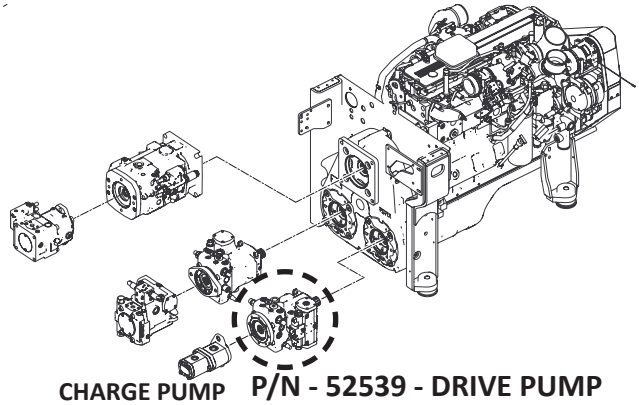

CHARGE PUMP **P/N - 52539 - DRIVE PUMP**

| Item | Part # | Description | Qty. |
|---|---|---|---|
| | 52539 | PUMP, TRACK DRIVE - (RH) VTG90 | 1 |
| 1 | **SEE DESCRIPTION** | O-RING **(CALL)** | 1 |
| 2 | **SEE DESCRIPTION** | SEAL RING **(CALL)** | 1 |
| 3 | **SEE DESCRIPTION** | O-RING **(CALL)** | 1 |
| 4 | 21624 | O-RING, CHARGE PUMP PILOT (AA4VG90) | 1 |
| 5 | **SEE DESCRIPTION** | COVER, PUMP AA4VG90 **(CALL)** | 1 |
| 6 | 57807 | ORING, THRU-DRIVE 52539 POS 1 | 1 |
| 7 | **SEE DESCRIPTION** | BOLT **263 RED LOCTITE™ (CALL)** | 4 |
| 8 | **SEE DESCRIPTION** | FLANGE, INTERMEDIATE **(CALL)** | 1 |
| 9 | **SEE DESCRIPTION** | BOLT **263 RED LOCTITE™ (CALL)** | 6 |
| 10 | 57808 | ORING, THRU-DRIVE 52539 POS 2 | 1 |
| 11 | **SEE DESCRIPTION** | RING, CENTERING **(CALL)** | 1 |
| 12 | 57809 | ORING, THRU-DRIVE 52539 POS 3 | 1 |
| 13 | 18414 | COVER, THRU DRIVE - REXROTH | 1 |
| 14 | 18040 | WASHER, FLAT - .5” | 2 |
| 15 | 10733 | BOLT - .5” X 1” **263 RED LOCTITE™** | 2 |
| * | 53640 | KIT, SEAL REPAIR -TRACK DRIVE PUMP - VTG90R909830978 | 1 |

# H100-01443 - PUMP, TRACK DRIVE COMPONENTS (VTG90)

**NOTE: APPLY GREASE TO O-RINGS**

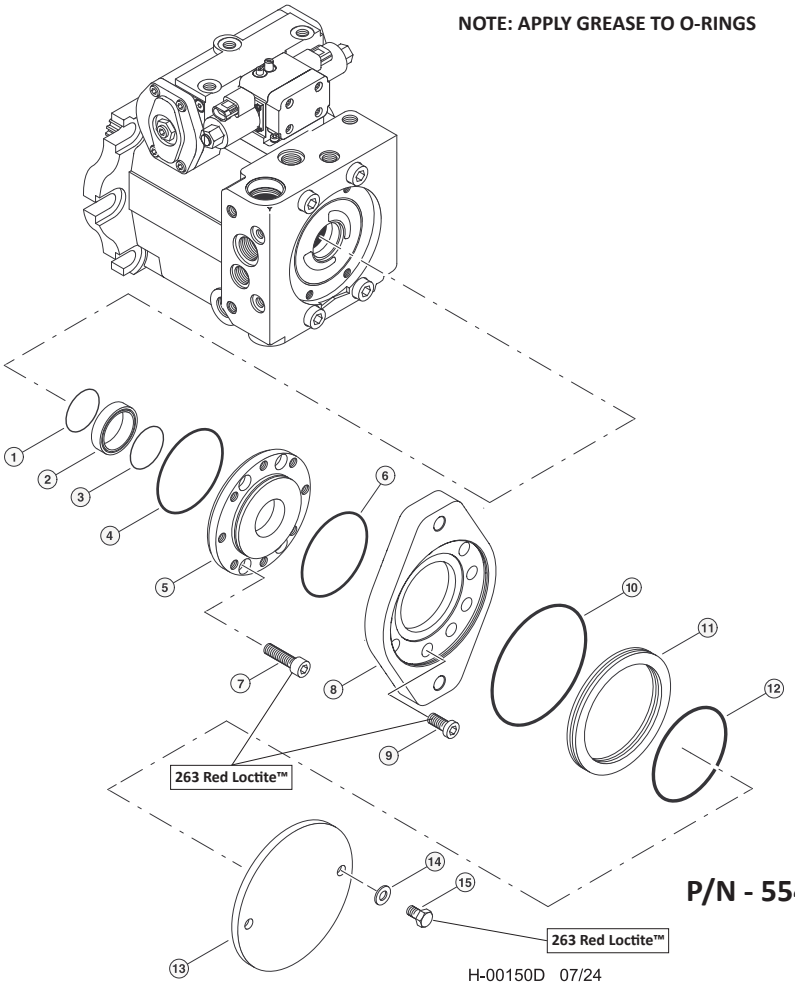


**P/N - 55458 - DRIVE PUMP**

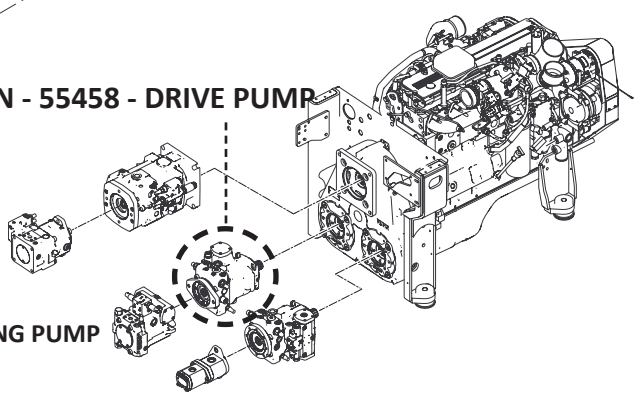

**SWING PUMP**

| Item | Part # | Description | Qty. |
|---|---|---|---|
| | 55458 | PUMP, TRACK DRIVE - (LH) VTG90 | 1 |
| 1 | **SEE DESCRIPTION** | O-RING **(CALL)** | 1 |
| 2 | **SEE DESCRIPTION** | SEAL RING **(CALL)** | 1 |
| 3 | **SEE DESCRIPTION** | O-RING **(CALL)** | 1 |
| 4 | 21624 | O-RING, CHARGE PUMP PILOT (AA4VG90) | 1 |
| 5 | **SEE DESCRIPTION** | COVER, PUMP AA4VG90 **(CALL)** | 1 |
| 6 | 57807 | ORING, THRU-DRIVE 52539 POS 1 | 1 |
| 7 | **SEE DESCRIPTION** | BOLT **263 RED LOCTITE™ (CALL)** | 4 |
| 8 | **SEE DESCRIPTION** | FLANGE, INTERMEDIATE | 1 |
| 9 | **SEE DESCRIPTION** | BOLT **263 RED LOCTITE™ (CALL)** | 6 |
| 10 | 57808 | ORING, THRU-DRIVE 52539 POS 2 | 1 |
| 11 | **SEE DESCRIPTION** | RING, CENTERING **(CALL)** | 1 |
| 12 | 57809 | ORING, THRU-DRIVE 52539 POS 3 | 1 |
| 13 | 18414 | COVER, THRU DRIVE - REXROTH | 1 |
| 14 | 18040 | WASHER, FLAT - .5” | 2 |
| 15 | 10733 | BOLT - .5” X 1” **263 RED LOCTITE™** | 2 |
| * | 53640 | KIT, SEAL REPAIR -TRACK DRIVE PUMP - VTG90R909830978 | 1 |

# H100-01450 - SWING PUMP

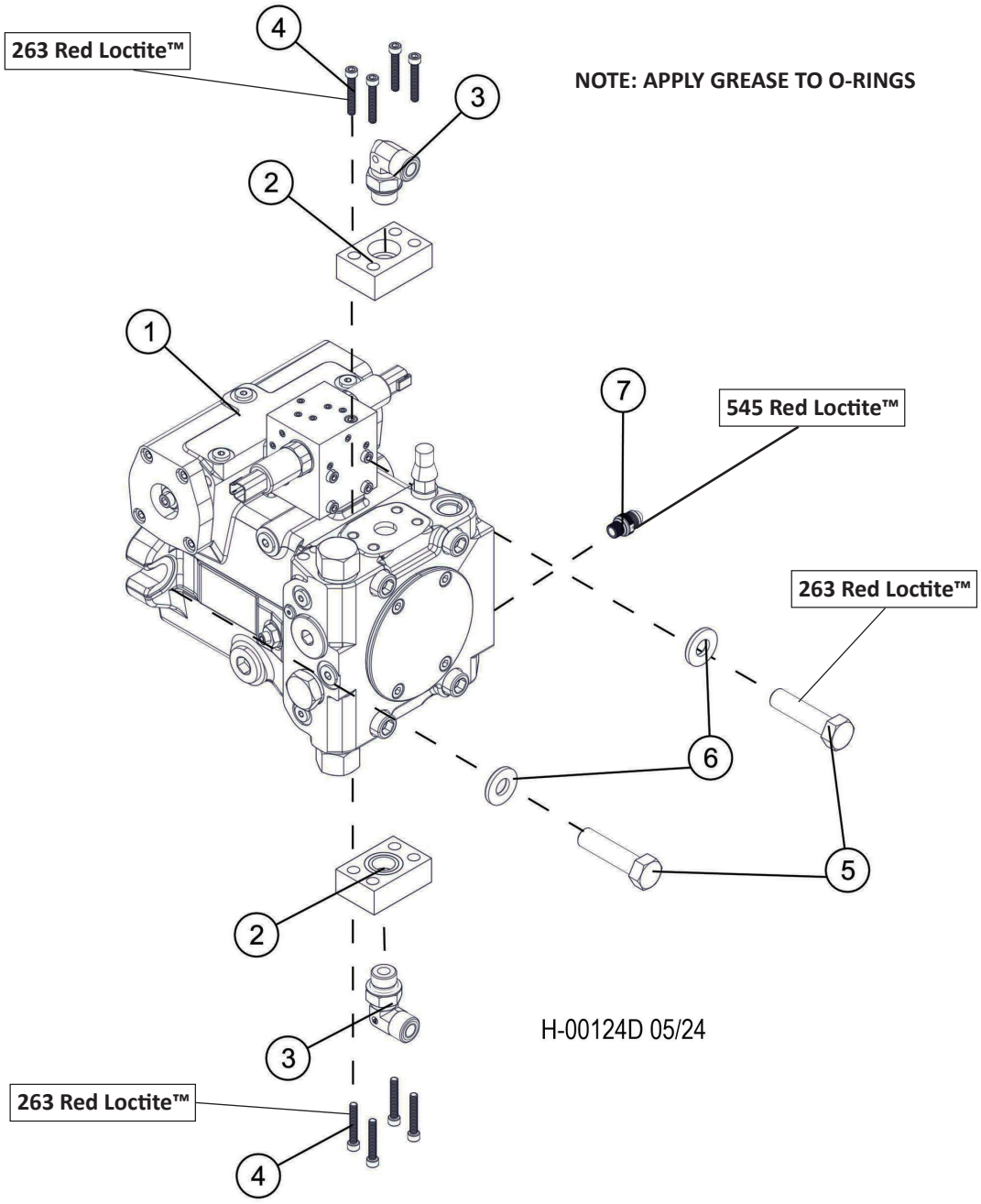


| Item | Part # | Description | Qty. |
|---|---|---|---|
| 1 | 54560 | PUMP, SWING (735/755/830) | 1 |
| 2 | 19808 | CONNECTOR, FLANGE PAD -FP62-12-12ORB-MK | 2 |
| 3 | 17688 | ELBOW, 90 - FF1868T-1212S | 2 |
| 4 | 58399 | BOLT - 3/8-16x1.5, SHC **263 RED LOCTITE™** | 8 |
| 5 | 18928 | BOLT - 16MM-2.0P X 45MM **263 RED LOCTITE™** | 2 |
| 6 | 65468 | WASHER, FLAT - 16MM | 2 |
| 7 | 57819 | TAP, GAUGE PORT - #4 SAE ORING BOSS- ST **545 RED LOCTITE™** | 1 |

# H100-01451 - SWING PUMP COMPONENTS

**NOTE: APPLY GREASE TO O-RINGS**

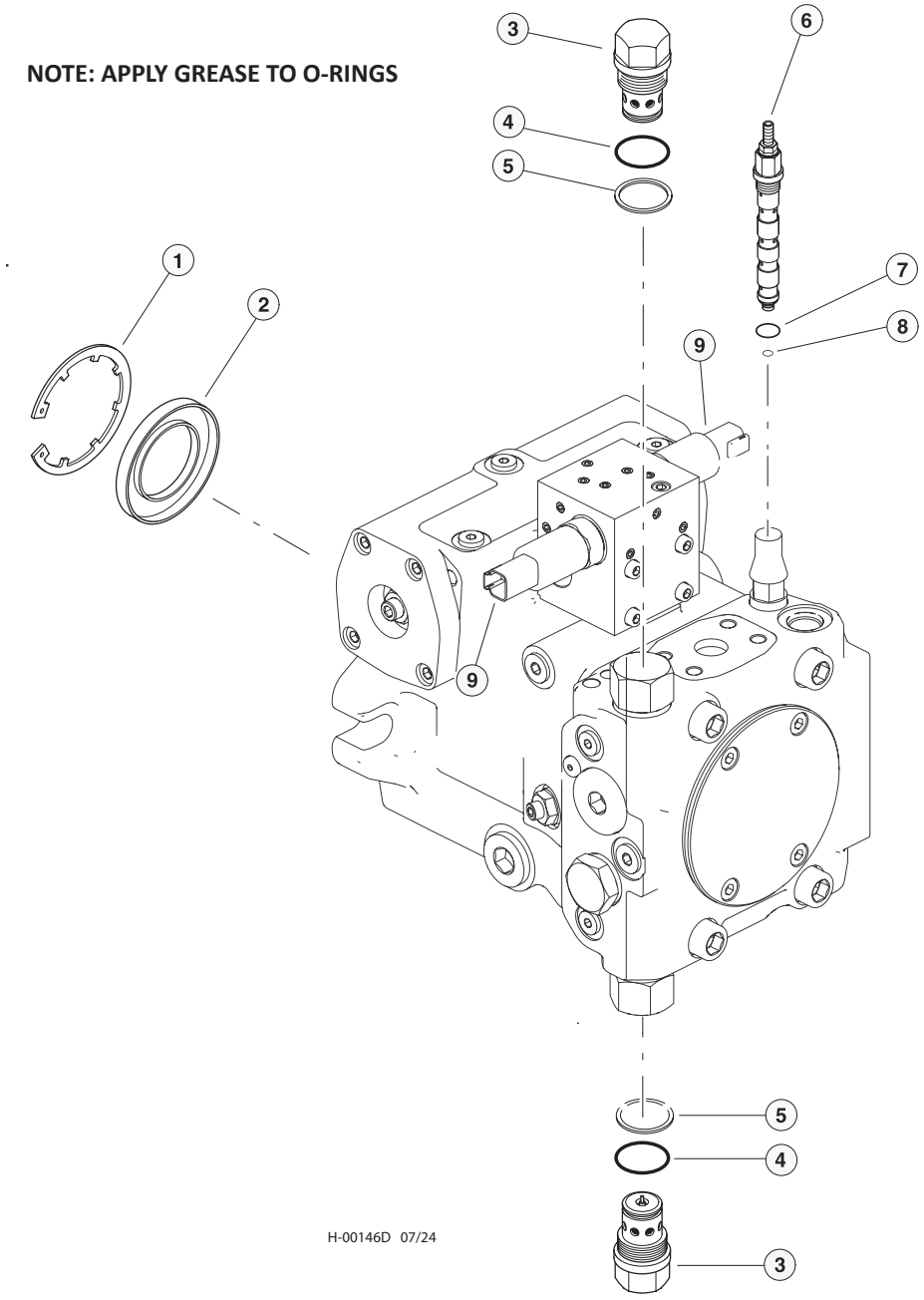


| Item | Part # | Description | Qty. |
|---|---|---|---|
| | 54560 | PUMP, SWING (735/755/830) | 1 |
| 1 | **SEE DESCRIPTION** | RETAINING RING **(CALL)** | 1 |
| 2 | 57704 | SHAFT SEAL RING | 1 |
| 3 | **SEE DESCRIPTION** | PRESSURE RELIEF VALVE **(CALL)** | 2 |
| 4 | **SEE DESCRIPTION** | BACK-UP RING **(CALL)** | 2 |
| 5 | **SEE DESCRIPTION** | BACK-UP RING **(CALL)** | 2 |
| 6 | **SEE DESCRIPTION** | PRESSURE OVERRIDE VALVE | 1 |
| 7 | **SEE DESCRIPTION** | O-RING **(CALL)** | 1 |

# H100-01452 - SWING PUMP COMPONENTS

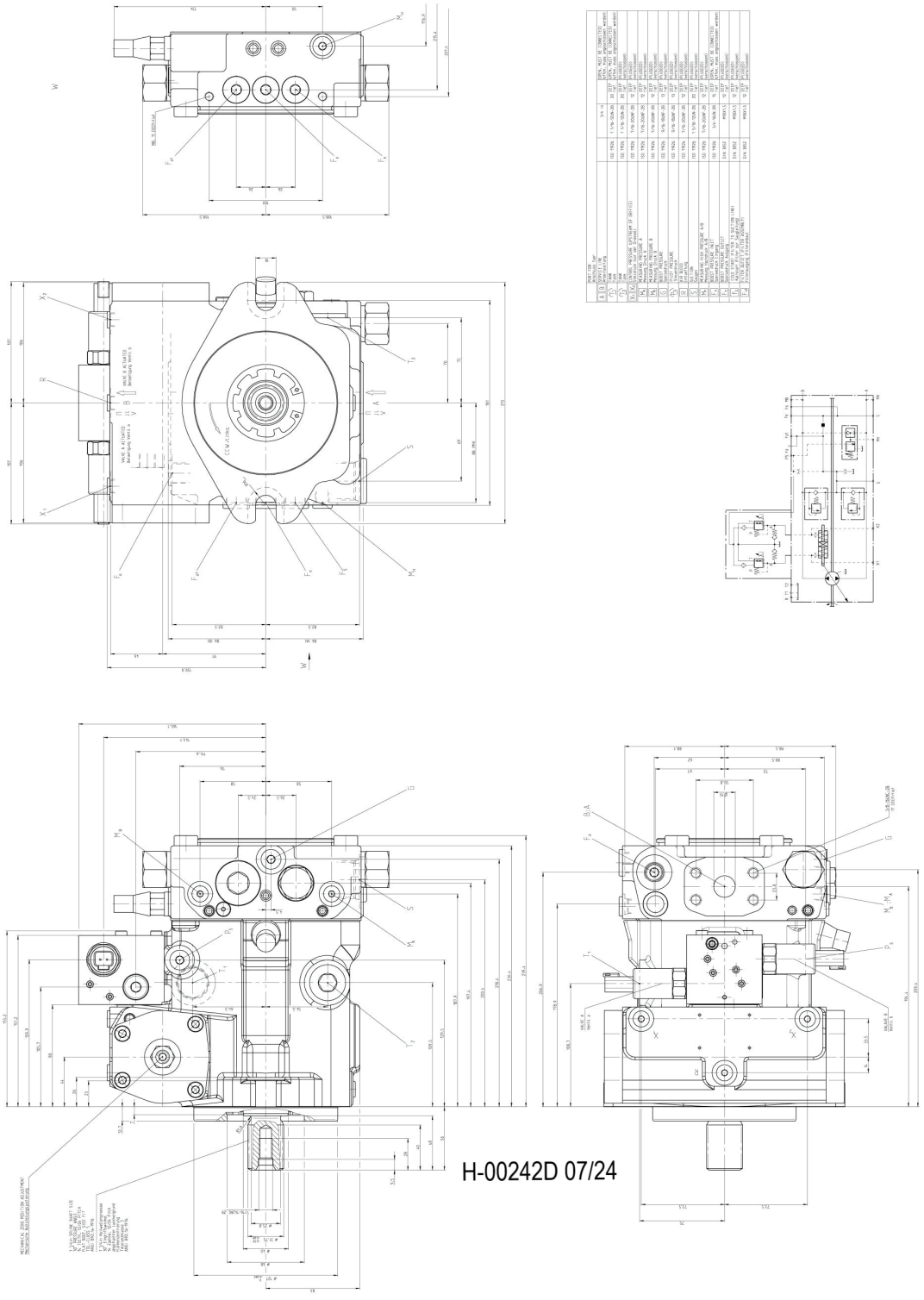

H-00242D 07/24

# H100-01452 - SWING PUMP COMPONENTS

| Item | Part # | Description | Qty. |
|---|---|---|---|
| 1 | R909607708 | ROTARY GROUP | 1 |
| 2 | R902008624 | CONTROL | 1 |
| 3 | R902219636 | CONNECTION PLATE | 1 |
| 4 | R902064015 | PUMP COVER | 1 |
| 5 | R902115257 | CONTROL MODULE | 1 |
| 6 | R902029575 | HOUSING | 1 |
| 7 | R902132713 | PIVOT PIN | 1 |
| 8 | R909154480 | SCREW PLUG | 1 |
| 9 | R909153371 | SCREW PLUG | 2 |
| 10 | R909154478 | SCREW PLUG | 4 |
| 11 | R909153815 | SCREW PLUG | 3 |
| 12 | R909083228 | SCREW PLUG | 1 |
| 13 | R909086731 | O-RING | 1 |
| 14 | R909153572 | SCREW PLUG | 1 |
| 15 | R909831318 | DOUBLE BREAK-OFF PLUG | 2 |
| 16 | R909156495 | NOZZLE | 2 |
| 17 | R913016373 | SLOTTED SPRING PIN | 2 |
| 18 | R909153364 | SCREW PLUG | 1 |
| 19 | R909087912 | SCREW PLUG | 1 |
| 20 | R909153378 | SCREW PLUG | 1 |
| 21 | R909435856 | ECCENTRIC SCREW | 1 |
| 22 | R909153271 | SEALING NUT | 1 |
| 23 | R909156497 | NOZZLE | 1 |

# H100-01453 - SWING PUMP COMPONENTS

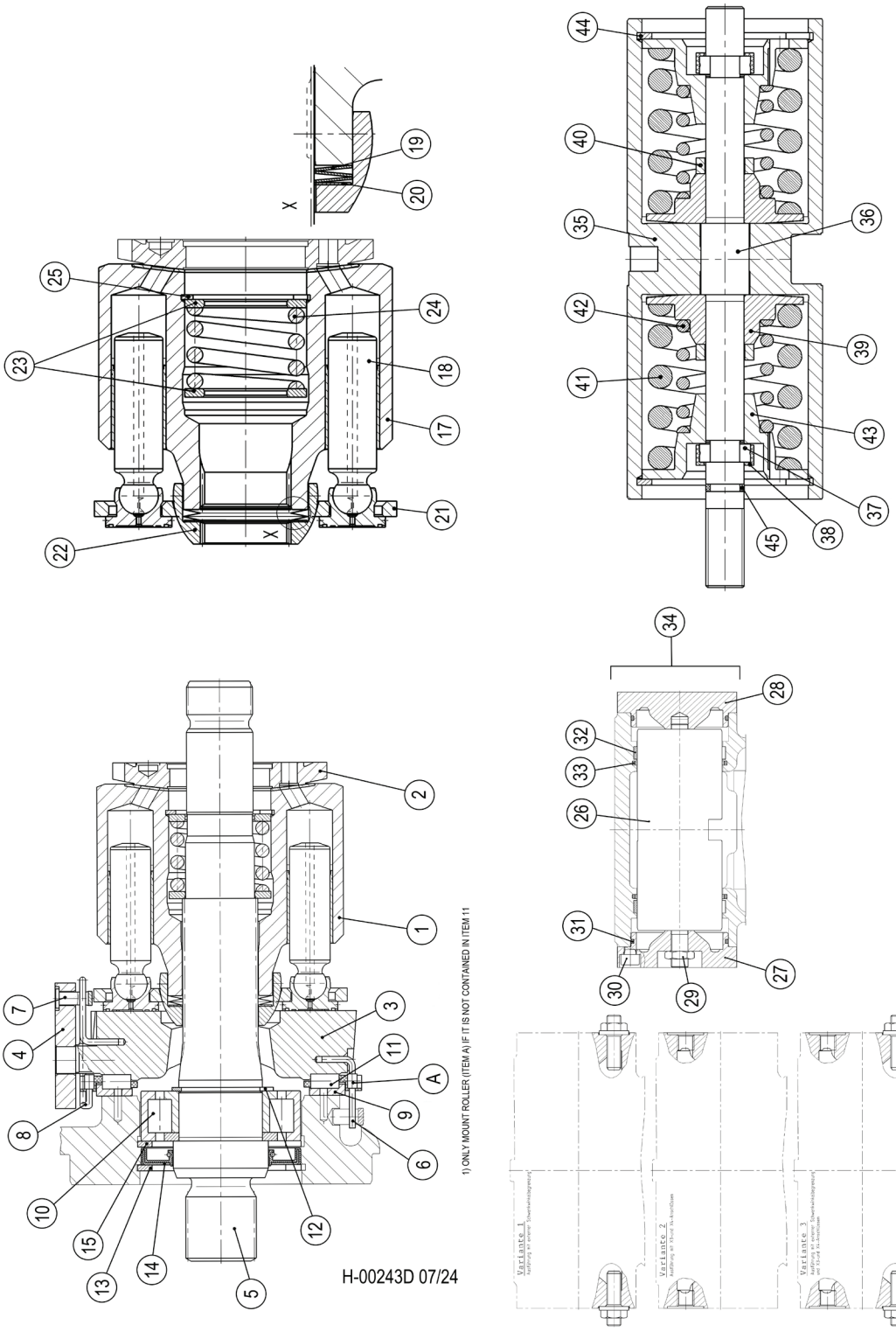

# H100-01453 - SWING PUMP COMPONENTS

| Item | Part # | Description | Qty. |
|---|---|---|---|
| 1 | R902079268 | ROTARY GROUP | 1 |
| 2 | R902273785 | CONTROL PLATE, LEFT-HAND ROTATION | 1 |
| 3 | R909449544 | CRADLE | 1 |
| 4 | R909449607 | SLIDER | 1 |
| 5 | R909449686 | DRIVE SHAFT | 1 |
| 6 | R909408786 | WIRE | 1 |
| 7 | R909443447 | PIVOT PIN | 1 |
| 8 | R909449590 | WIRE | 1 |
| 9 | R913051689 | BEARING SHELL PAIR | 1 |
| 10 | R909156259 | CYL. ROLLER BEARING | 1 |
| 11 | R902603727 | CAGE PAIR | 1 |
| 12 | R909083360 | RETAINING RING | 1 |
| 13 | R902600000 | RETAINING RING | 1 |
| 14 | 57704 | SEAL, SHAFT - SWING PUMP - 54560 | 1 |
| 15 | R909831280 | RETAINING RING | 1 |
| 16 | R902002388 | SEAL KIT | 1 |
| 17 | R902262308 | CYLINDER | 1 |
| 18 | R902279922 | PISTON PAD | 9 |
| 19 | R902192956 | CUP-SPRING STACK | 1 |
| 20 | R909432991 | SHIM RING | 1 |
| * | R909432992 | SHIM RING | 1 |
| * | R909432993 | SHIM RING | 1 |
| * | R909432994 | SHIM RING | 1 |
| 21 | R902205451 | RETAINING PLATE | 1 |
| 22 | R909445275 | RETAINING BALL | 1 |
| 23 | R909449683 | WASHER | 2 |
| 24 | R909436102 | COMPRESSION SPRING | 1 |
| 25 | R909831182 | RETAINING RING | 1 |

# H100-01454 - SWING PUMP COMPONENTS

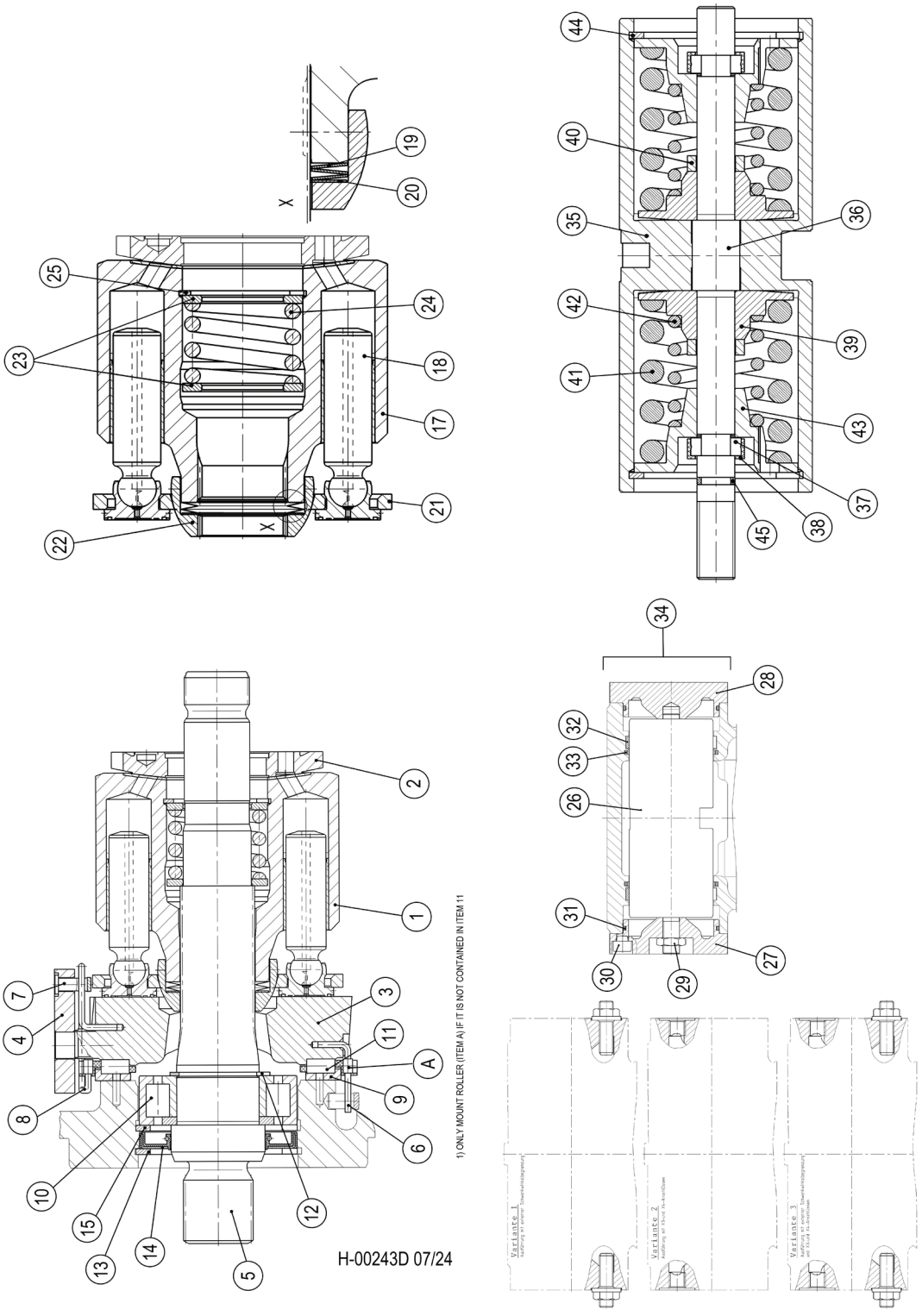

# H100-01454 - SWING PUMP COMPONENTS

| Item | Part # | Description | Qty. |
|---|---|---|---|
| 26 | R902020483 | POSITIONING PISTON | 1 |
| 27 | R902007563 | COVER | 1 |
| 28 | R902007564 | COVER | 1 |
| 29 | R909154918 | HEXAGON NUT | 1 |
| 30 | R909083034 | SOCKET HEAD CAP SCREW | 8 |
| 31 | R909083785 | O-RING | 2 |
| 32 | R902600750 | ROD GUIDANCE RING | 2 |
| 33 | R902600194 | ROD SEAL | 2 |
| 34 | R902002371 | SEAL KIT | 1 |
| 35 | R902222640 | POSITIONING PISTON | 1 |
| 36 | R909449238 | ROD | 1 |
| 37 | R902015511 | RING | 2 |
| * | R902015514 | RING | 2 |
| * | R902015513 | RING | 2 |
| * | R902015512 | RING | 2 |
| * | R902015510 | RING | 2 |
| * | R902015509 | RING | 2 |
| * | R902015508 | RING | 2 |
| * | R902013493 | RING | 2 |
| 38 | R902600489 | LOCATING RING | 2 |
| 39 | R909449245 | SPRING DISK | 2 |
| 40 | R909445783 | SPACER RING | 2 |

# H100-01455 - SWING PUMP COMPONENTS

**NOTE: APPLY GREASE TO O-RINGS**

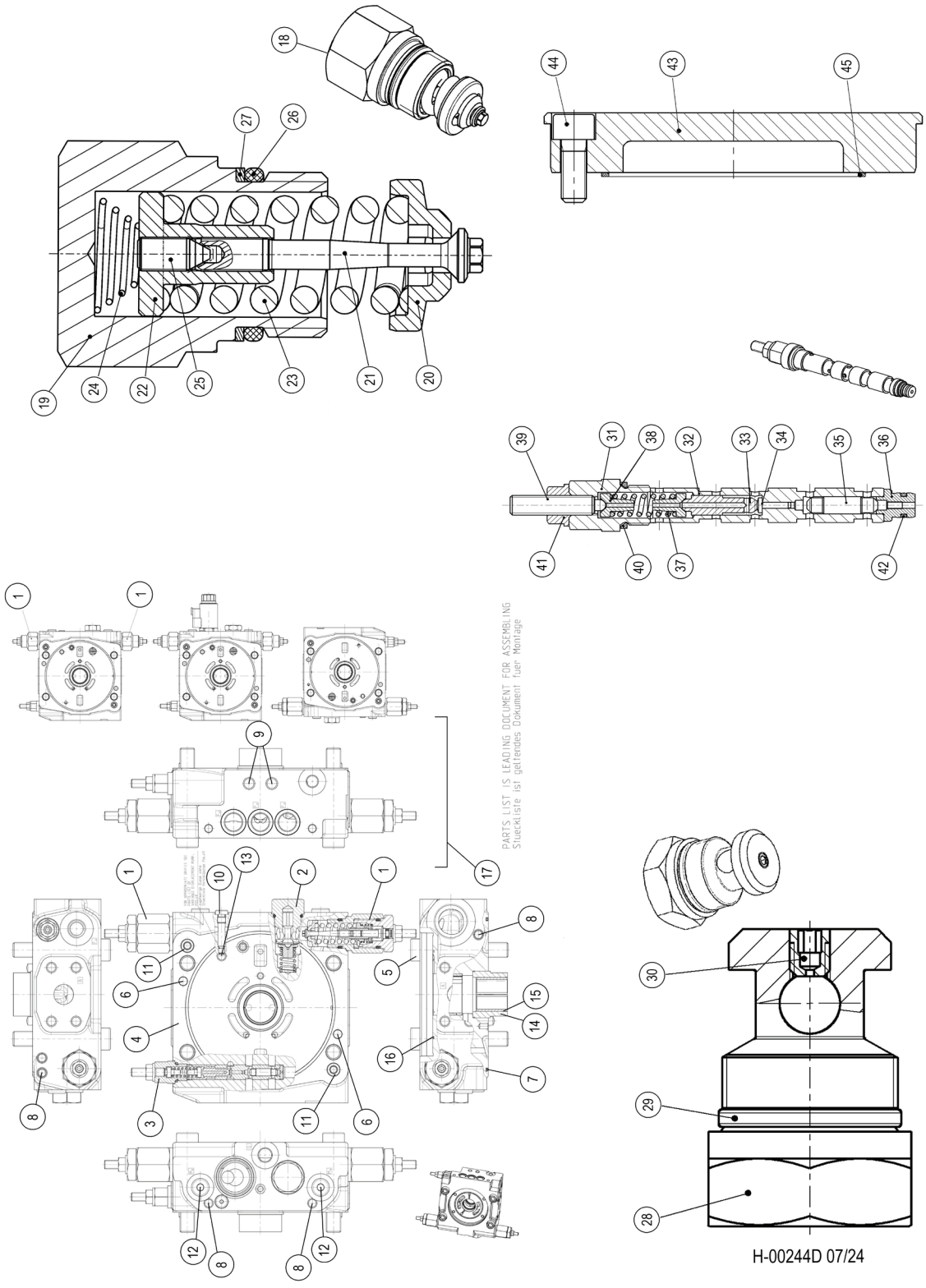

# H100-01455 - SWING PUMP COMPONENTS

| Item | Part # | Description | Qty. |
|---|---|---|---|
| 1 | R902016386 | PRESSURE RELIEF VALVE | 2 |
| 2 | R902152084 | LOCKING SET | 1 |
| 3 | R909446763 | PRESSURE CUT-OFF VALVE | 1 |
| 4 | R902153458 | CONNECTION PLATE | 1 |
| 5 | R909153817 | SOCKET HEAD CAP SCREW | 4 |
| 6 | R909084173 | STRAIGHT PIN | 2 |
| 7 | R909830424 | O-RING | 1 |
| 8 | R909831318 | DOUBLE BREAK-OFF PLUG | 3 |
| 9 | R909831319 | DOUBLE BREAK-OFF PLUG | 1 |
| 10 | R909154024 | SCREW PLUG | 1 |
| 11 | R909085709 | O-RING | 2 |
| 12 | R909154478 | SCREW PLUG | 2 |
| 13 | R909415314 | DOUBLE BREAK-OFF PLUG | 1 |
| 14 | R909439249 | BUSHING | 1 |
| 15 | R902283569 | BUSHING | 1 |
| 16 | R913037188 | KANTSEAL | 1 |
| 17 | R902002398 | SEAL KIT | 1 |
| 18 | R902281039 | PRESSURE RELIEF VALVE | 1 |
| 19 | R902281222 | SCREW PLUG | 1 |
| 20 | R902010478 | VALVE PLATE | 1 |
| 21 | R902010477 | VALVE STEM | 1 |
| 22 | R902016288 | EXPANSION PIECE | 1 |
| 23 | R909921948 | COMPRESSION SPRING | 1 |
| 24 | R902215544 | COMPRESSION SPRING | 1 |
| 25 | R902016289 | SETSCREW | 1 |
| 26 | R909083761 | O-RING | 1 |
| 27 | R909831768 | BACKUP RING | 1 |
| 28 | R902011417 | SCREW PLUG | 1 |
| 29 | R909083761 | O-RING | 1 |
| 30 | R909156494 | NOZZLE | 1 |
| 31 | R909449886 | SCREW PLUG | 1 |
| 32 | R909431452 | VALVE BUSHING | 1 |
| 33 | R909432162 | CONTROL PISTON | 1 |
| 34 | R909432163 | PISTON | 1 |
| 35 | R909432164 | VALVE SPOOL | 1 |
| 36 | R909436284 | VALVE SEAT | 1 |
| 37 | R902168277 | COMPRESSION SPRING | 1 |
| 38 | R902049851 | SPRING DISK | 2 |
| 39 | R909432167 | ADJUSTING SCREW | 1 |
| 40 | R909083752 | O-RING | 1 |
| 41 | R909152707 | SEALING NUT | 1 |
| 42 | R909086380 | O-RING | 1 |
| 43 | R902063317 | PUMP COVER | 1 |
| 44 | R909083036 | SOCKET HEAD CAP SCREW | 4 |
| 45 | R902002410 | SEAL KIT | 1 |

# H100-01456 - SWING PUMP COMPONENTS

**NOTE: APPLY GREASE TO O-RINGS**

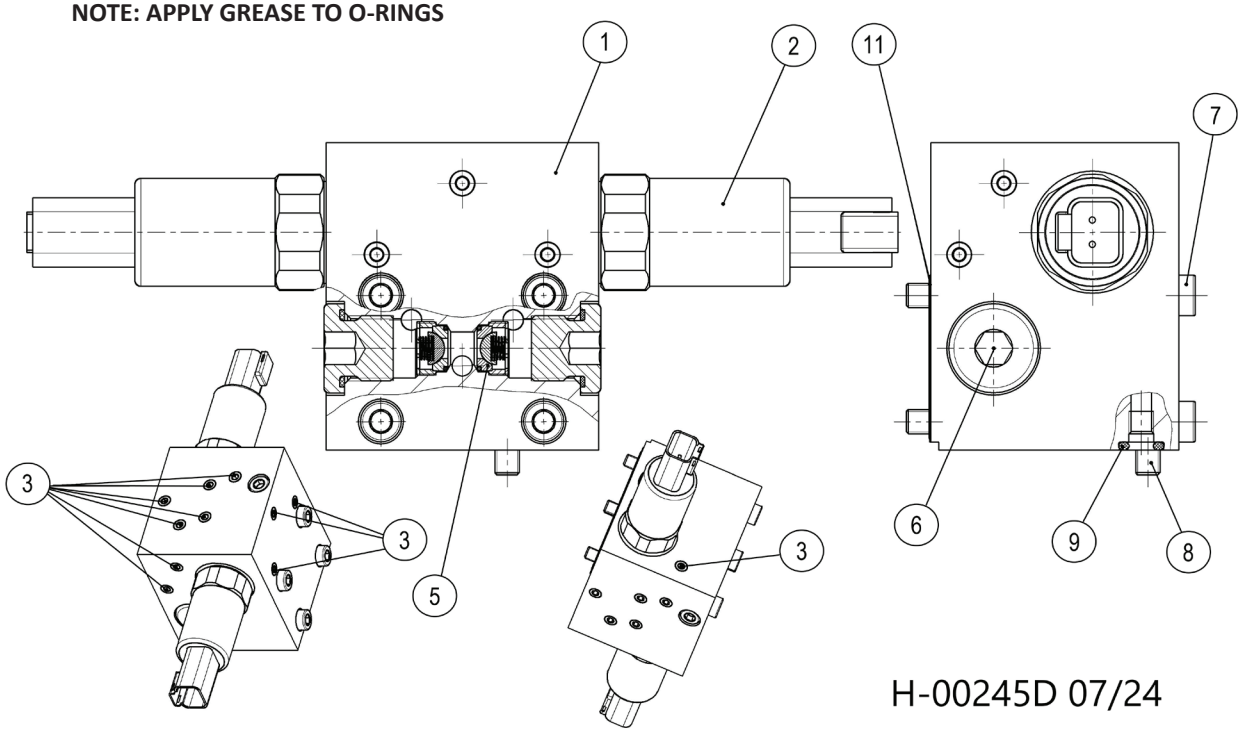


| Item | Part # | Description | Qty. |
|---|---|---|---|
| 1 | R902115246 | HOUSING | 1 |
| 2 | 57591 | VALVE, SWING PUMP (R901121566) | 2 |
| 3 | R902600705 | PLUG | 11 |
| 4 | R902603829 | SEAL | 1 |
| 5 | R909831957 | CHECK VALVE | 2 |
| 6 | R909153816 | SCREW PLUG | 2 |
| 7 | R909085831 | SOCKET HEAD CAP SCREW | 4 |
| 8 | R909086491 | SOCKET HEAD CAP SCREW | 1 |
| 9 | R909157512 | O-RING | 1 |

# H100-01460 - SWING LOCK-CASE DRAIN MANIFOLD

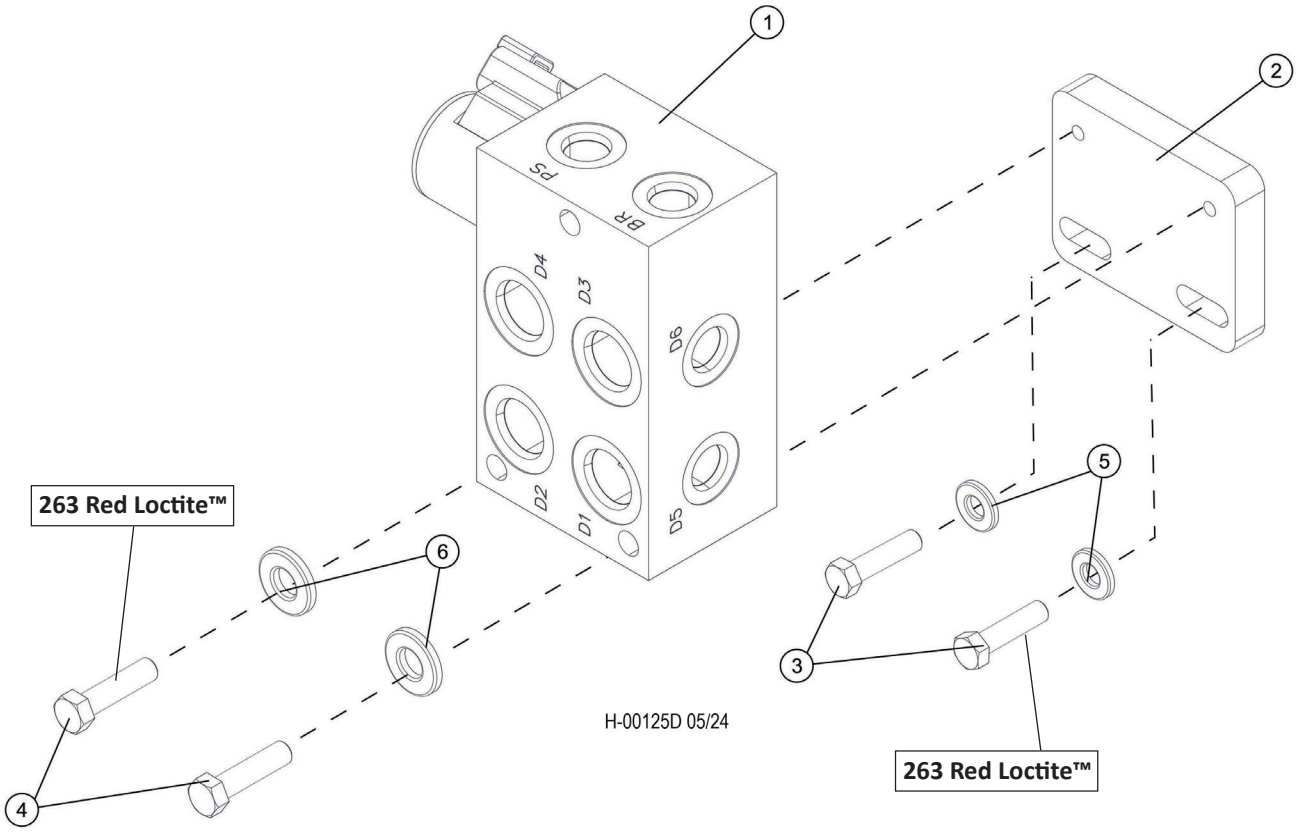


| Item | Part # | Description | Qty. |
|---|---|---|---|
| 1 | 55259 | MANIFOLD, CASE DRAIN/SWING LOCK | 1 |
| 2 | 46417 | BAR, MANIFOLD SPACER | 1 |
| 3 | 15589 | BOLT - .3125” X 1” **263 RED LOCTITE™** | 2 |
| 4 | 15508 | BOLT - .25” X 2.5” **263 RED LOCTITE™** | 2 |
| 5 | 10801 | WASHER, FLAT - .3125” | 2 |
| 6 | 10800 | WASHER, FLAT - .25” | 2 |
| | | ***MANIFOLD COMPONENTS*** | |
| * | 58734 | CARTRIDGE AND COIL | 1 |
| * | 53737 | COIL ONLY | 1 |

# H100-01461 - SWING LOCK-CASE DRAIN MANIFOLD COMPONENTS

**NOTE: APPLY GREASE TO O-RINGS**

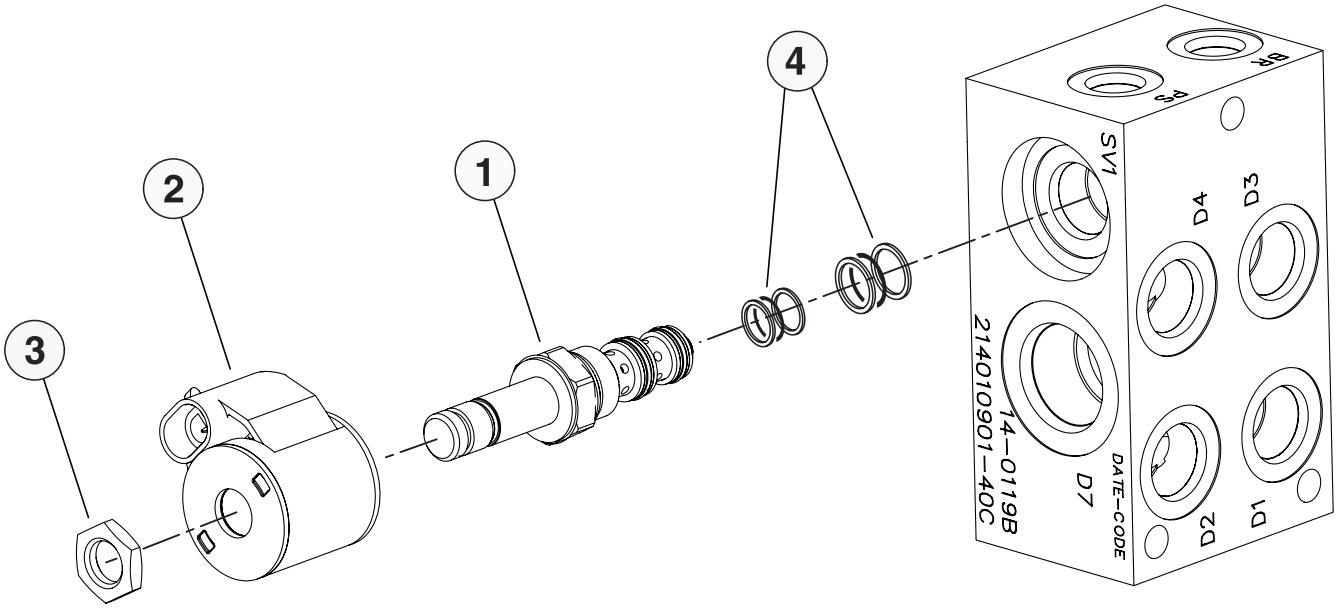


H-00145D 07/24

| Item | Part # | Description | Qty. |
|---|---|---|---|
| | 55259 | MANIFOLD, CASE DRAIN/SWING LOCK | 1 |
| 1 | 55986 | VALVE, SOLENOID - PARKING BRAKE | 1 |
| 2 | 4304024 | COIL | 1 |
| 3 | 7004400 | NUT | 1 |
| 4 | 52228 | KIT, SEAL | 1 |
| | | | 1 |

# H100-01470 - CHARGE PUMP

**NOTE: APPLY GREASE TO O-RINGS**

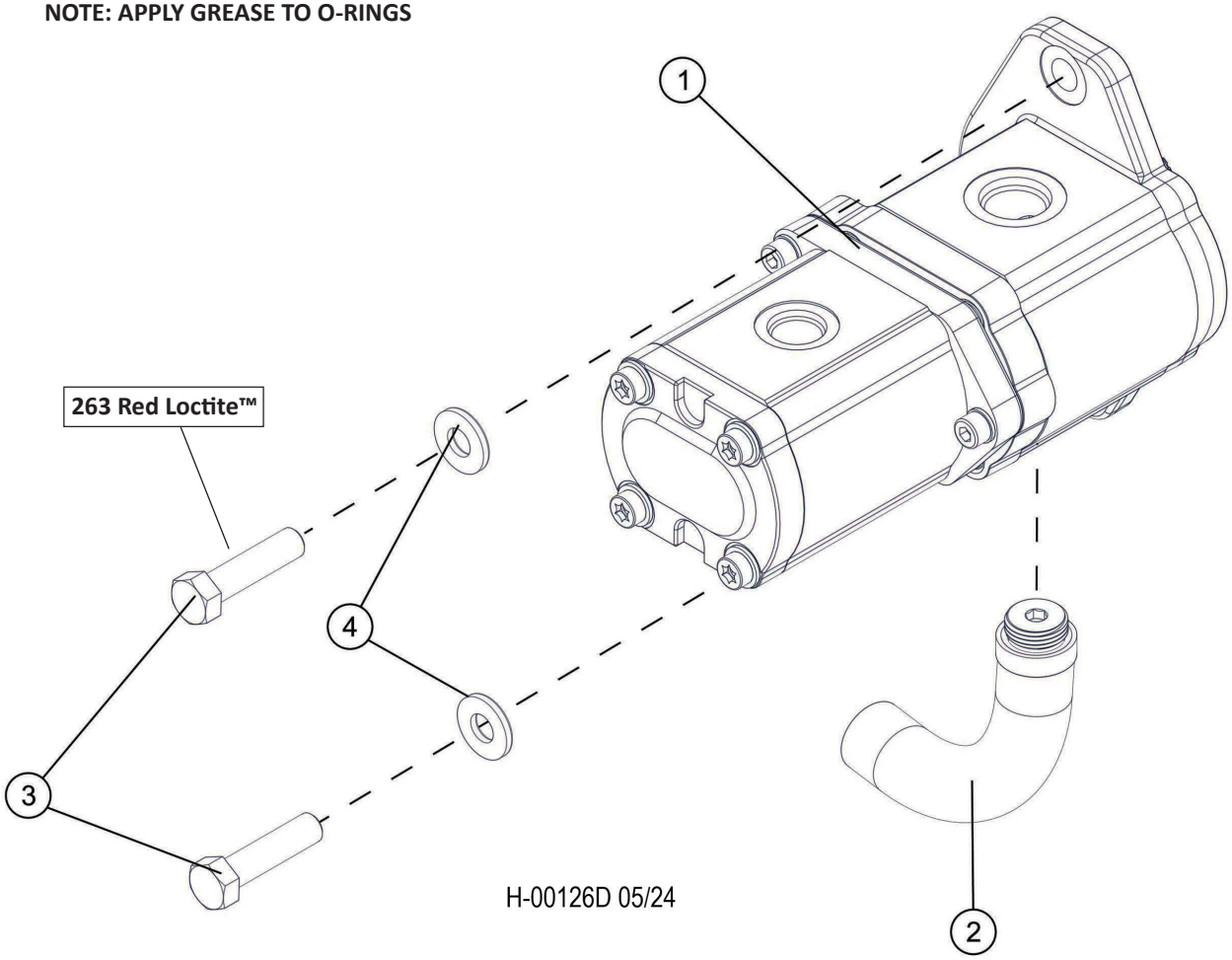


| Item | Part # | Description | Qty. |
|---|---|---|---|
| 1 | 57609 | PUMP, CHARGE - DUAL FLOW | 1 |
| 2 | 57663 | FITTING, ELBOW - HOSE END 90° | 1 |
| 3 | 18415 | BOLT - 12MM-1.75P X 30MM **263 RED LOCTITE™** | 2 |
| 4 | 18735 | WASHER, FLAT - 12MM | 2 |
| | | ***PUMP COMPONENTS*** | |
| * | 1510283023 | SHAFT SEAL | 1 |
| * | 1517010194 | SEAL KIT | 1 |
| * | 55323 | SEAL KIT | 1 |

# H100-01471 - CHARGE PUMP COMPONENTS

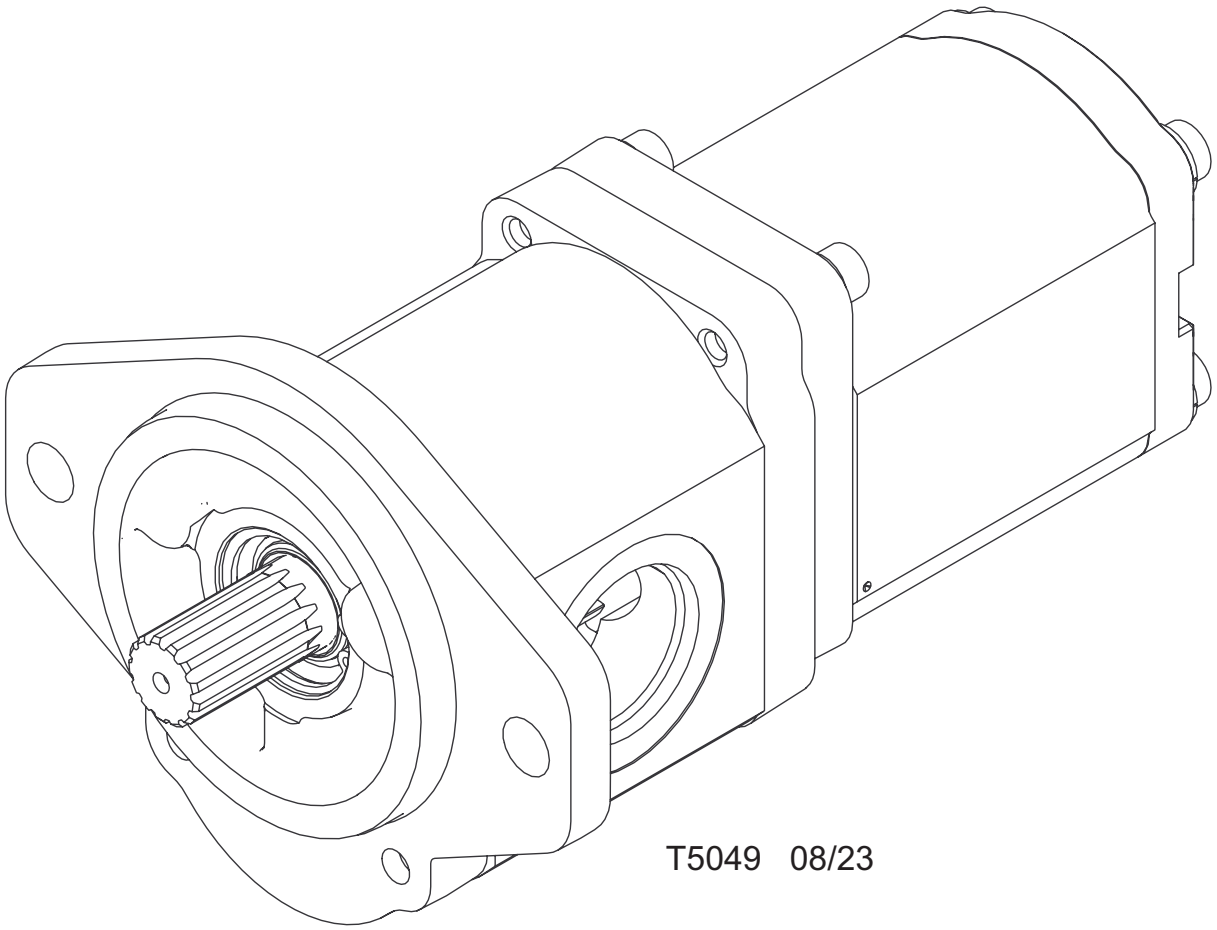


| Item | Part # | Description | Qty. |
|---|---|---|---|
| * | 57609 | PUMP, CHARGE - DUAL FLOW | 1 |
| * | 58177 | SHAFT SEAL - 25.4-38.1-6.35 NBR | 1 |
| * | 55323 | SEAL KIT | 1 |
| * | 21624 | O-RING, CHARGE PUMP PILOT (AA4VG90) | 1 |
| * | 2063677AD | COUPLING, CHARGE PUMP | 1 |

***MEANS NOT SHOWN**

# H100-01473 - CHARGE PUMP SUCTION

**NOTE: APPLY GREASE TO O-RINGS**

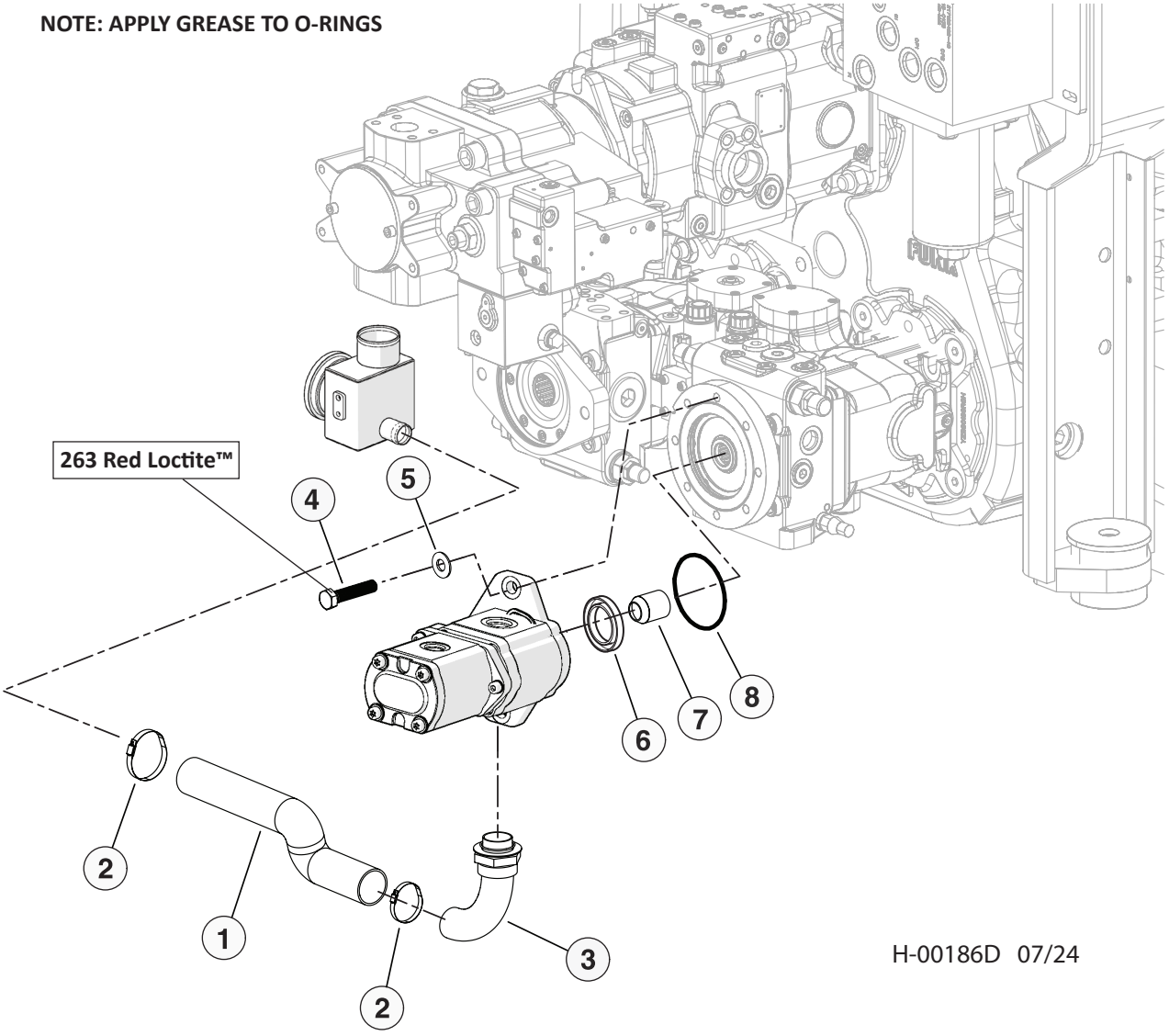


| Item | Part # | Description | Qty. |
|---|---|---|---|
| 1 | 65833 - (65952 - KIT) | HOSE, SUCTION, 7216-15021724-0-0 | 1 |
| 2 | 55614 | CLAMP, CONSTANT TORQUE - 1.75” | 1 |
| 3 | 57663 | FITTING, ELBOW - HOSE END 90° | 1 |
| 4 | 18735 | WASHER, FLAT - 12MM **263 RED LOCTITE™** | 2 |
| 5 | 18415 | BOLT - 12MM-1.75P X 30MM | 2 |
| 6 | 58177 | SEAL, SHAFT - 57609 CHARGE PUMP | 1 |
| 7 | 2063677AD | COUPLING, CHARGE PUMP | 1 |
| 8 | 21624 | O-RING, CHARGE PUMP PILOT (AA4VG90) | 1 |

# H100-01480 - CHARGE OIL MANIFOLD

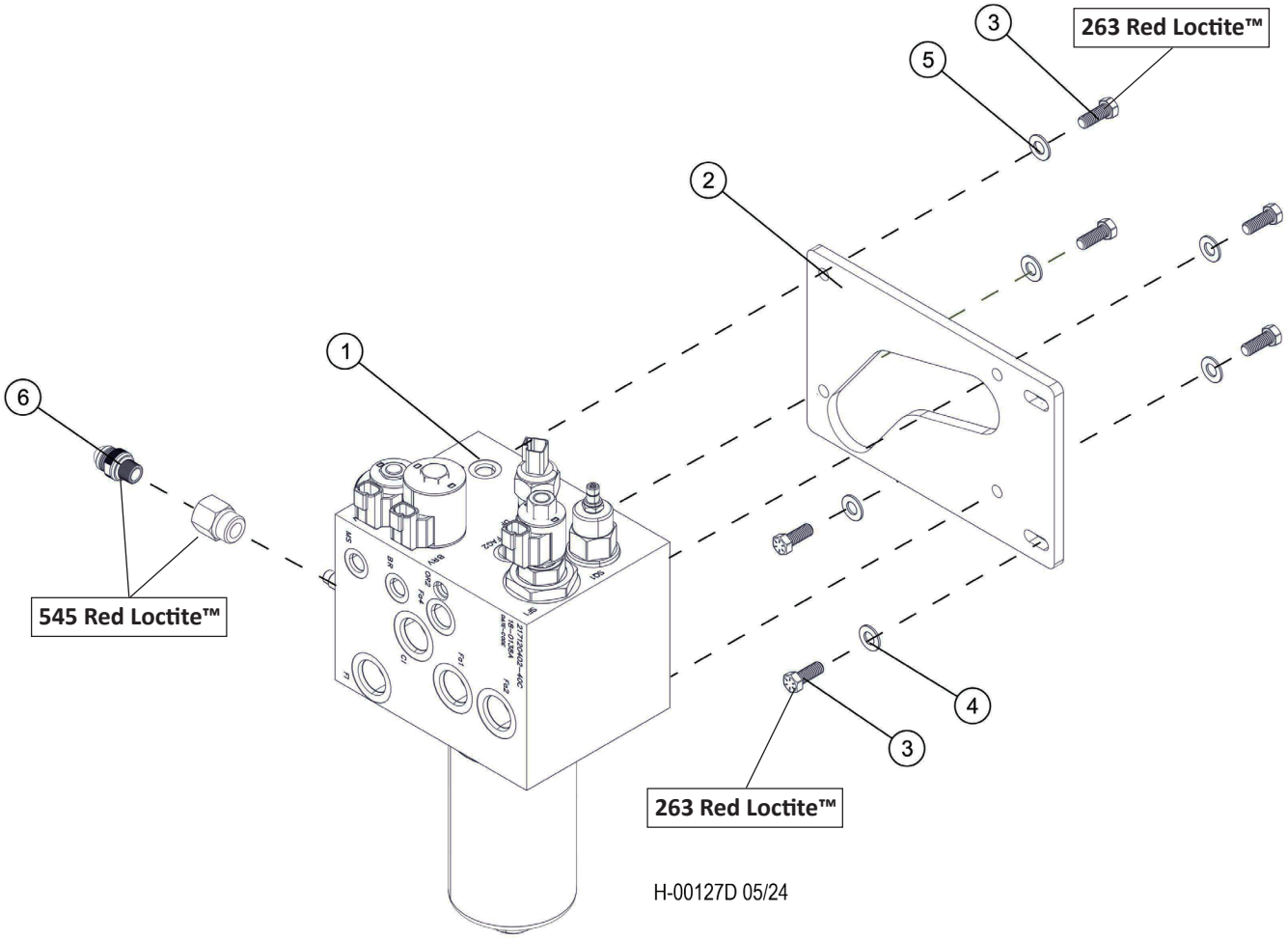


| Item | Part # | Description | Qty. |
|---|---|---|---|
| 1 | 57881 | MANIFOLD, CHARGE / COOLER - D SERIES | 1 |
| 2 | 60391 | PLATE, CHARGE BLOCK MOUNT - D | 1 |
| 3 | 11707 | BOLT - .375” X 1” **263 RED LOCTITE™** | 6 |
| 4 | 10801 | WASHER, FLAT - .375” | 2 |
| 5 | 15528 | WASHER, SAE FLAT - .375” | 4 |
| 6 | 57820 | TAP, GAUGE PORT # 6 SAE - Oring Boss **545 RED LOCTITE™** | 1 |

# H100-01482 - CHARGE OIL MANIFOLD COMPONENTS

**NOTE: APPLY GREASE TO O-RINGS**

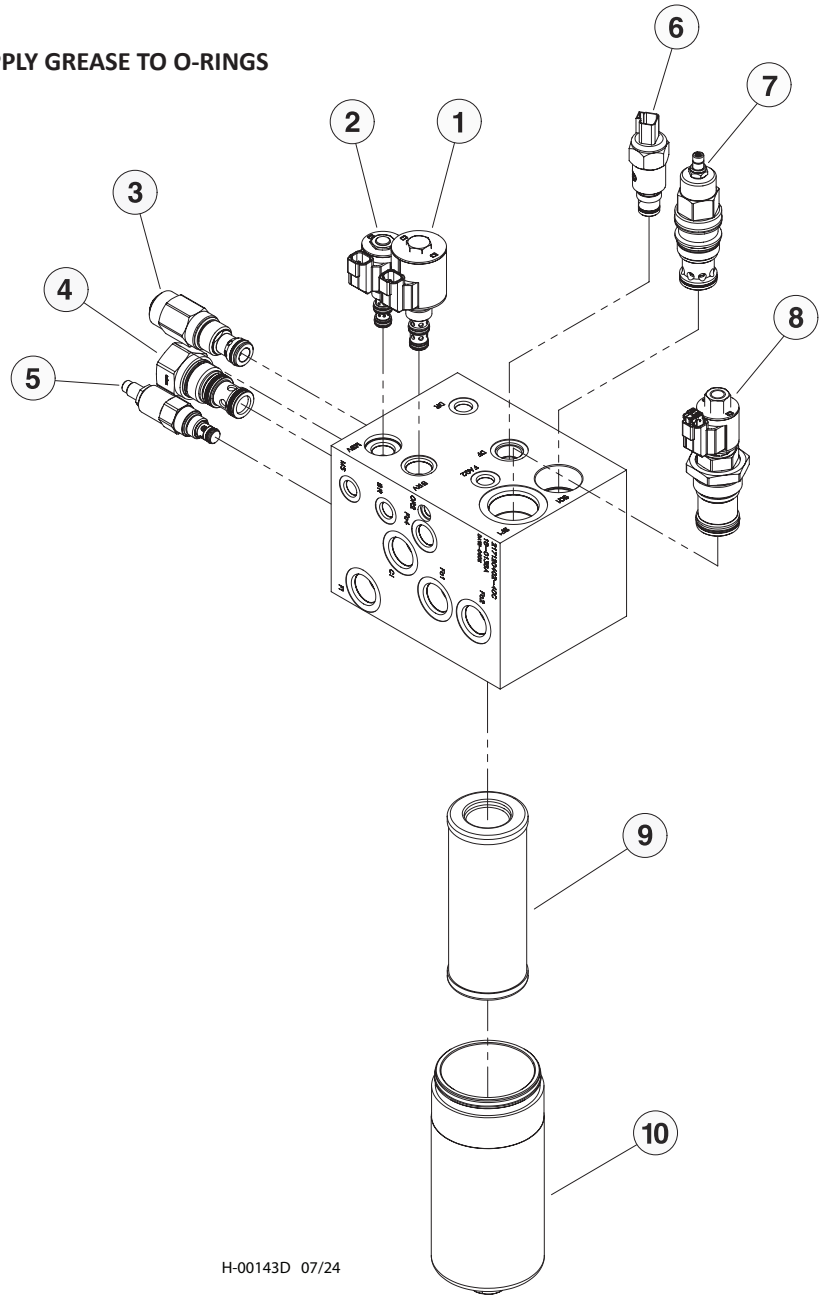


| Item | Part # | Description | Qty. |
|---|---|---|---|
| 1 | 58362 | CARTRIDGE, COIL COMBO PB | 1 |
| 2 | 58363 | CARTRIDGE, COIL COMBO MTR SFT | 1 |
| 3 | 53882 | CARTRIDGE, PRES. RELIEF | 1 |
| 4 | EP16-S35 - (57881) | CARTRIDGE | 1 |
| 5 | RV12-26H - (57881) | CARTRIDGE | 1 |
| 6 | 62004 | SWITCH, FILTER INDICATOR | 1 |
| 7 | 52223 | CARTRIDGE, FAN DRIVE | 1 |
| 8 | 53737 | COIL, PARK BRAKE | 1 |
| 9 | 19861 | ELEMENT, HYDROSTATIC FILTER | 1 |
| 10 | LF 240 BOWL - (57881) | BOWL | 1 |

# H100-01490 - MANIFOLD, OIL COOLER CNTRL/SAW STOP

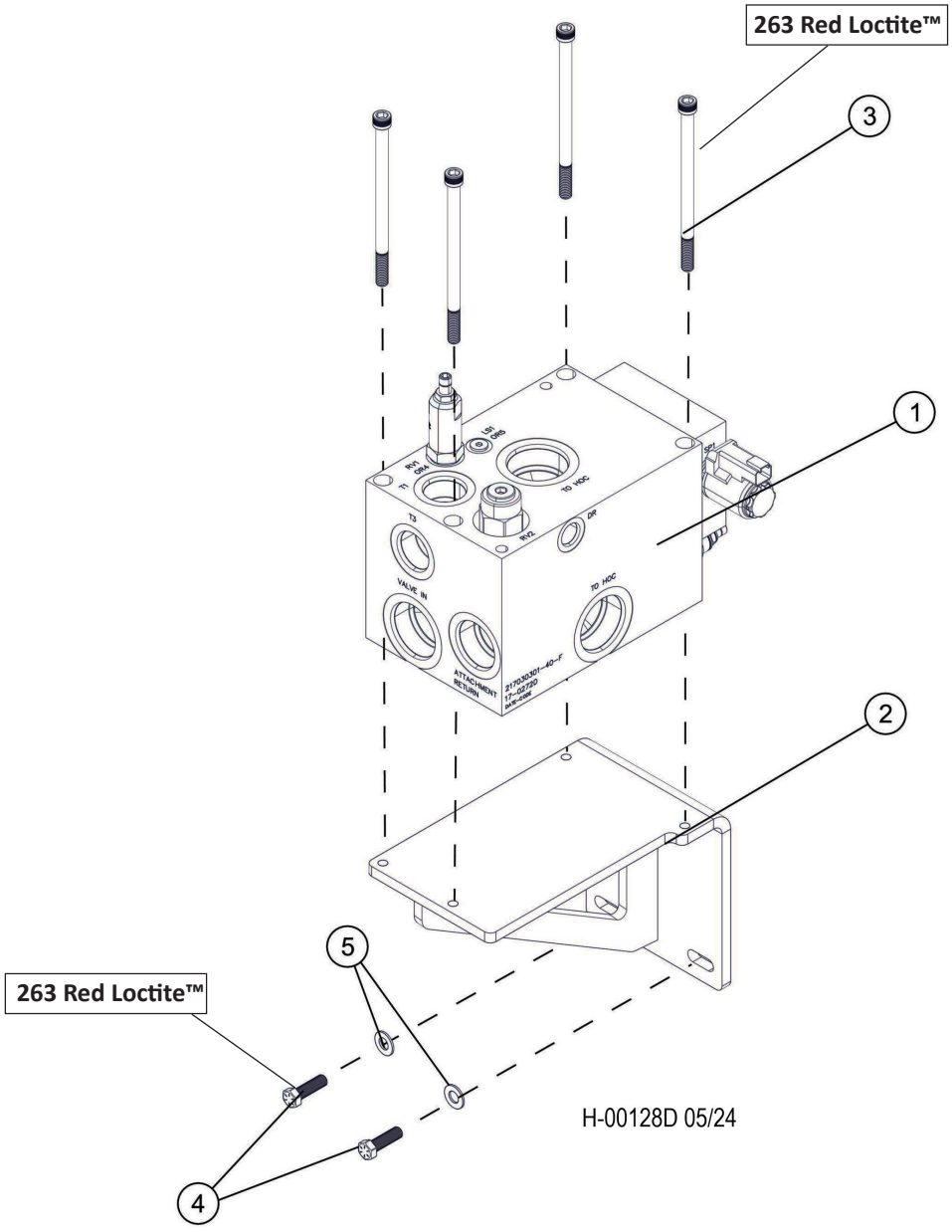


| Item | Part # | Description | Qty. |
|---|---|---|---|
| 1 | 57849 | MANIFOLD, HOC CONTROL-RETURN - D SERIES | 1 |
| 2 | 60403 | BRACKET, MANIFOLD - HOC | 1 |
| 3 | 58219 | BOLT, ALLEN 3/8-16X6 HOC MANIFOLD **263 RED LOCTITE™** | 4 |
| 4 | 10402 | BOLT, 3/8”x1 1/4” **263 RED LOCTITE™** | 2 |
| 5 | 10802 | 3/8” WASHER | 2 |

# H100-01491 - MANIFOLD, OIL COOLER CNTRL/SAW STOP COMPONENTS

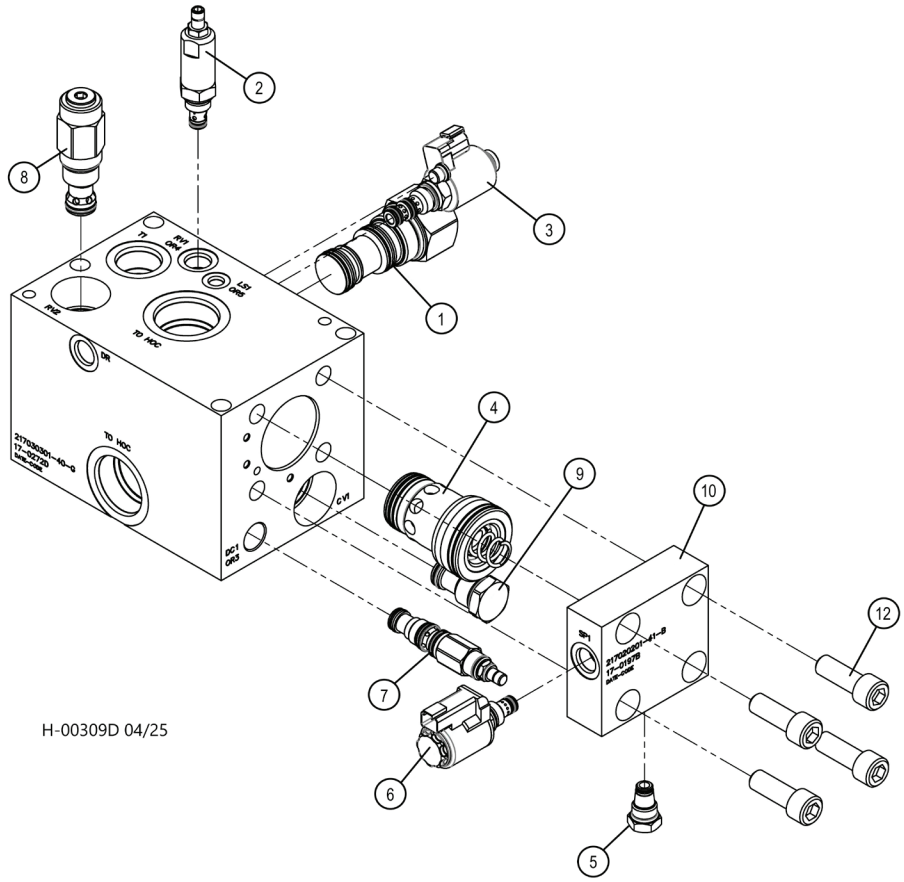


| Item | Part # | Description | Qty. |
|---|---|---|---|
| | 57849 | MANIFOLD, HOC CONTROL-RETURN | 1 |
| 1 | EV20-S34-0-N-20 | LOGIC VALVE | 1 |
| * | SK20-S3N-MN | SEAL KIT | 1 |
| 2 | DB08A-01-C-N-090V | PRESSURE RELIEF VALVE | 1 |
| 3 | OD133051A00 | DIRECTIONAL CONTROL VALVE | 1 |
| * | OD.02.36-22-3P-OC-000 | COIL | 1 |
| * | R901101723 | SEAL KIT | 1 |
| 4 | LC32DB20E-7X/ | LOGIC VALVE | 1 |
| * | R900313106 | SEAL KIT | 1 |
| 5 | SC08-20-0-N-100 | SCREEN CARTRIDGE | 1 |
| 6 | WK08W-01-C-N-0 | SOLENOID VALVE CARTRIDGE | 1 |
| * | 2022920 | SEAL KIT | 1 |
| 7 | DRBB-LEN | CARTRIDGE VALVE | 1 |
| * | 990011007 | SEAL KIT | 1 |
| 8 | RV12-26H-0-N-4 | PRESSURE RELIEF VALVE | 1 |
| * | SK12-2N-B | SEAL KIT | 1 |
| 9 | CV12-20-0-N-80 | CHECK VALVE | 1 |
| * | SK12-2N-T | SEAL KIT | 1 |

***MEANS NOT SHOWN**

# H100-01500 - RETURN MANIFOLD

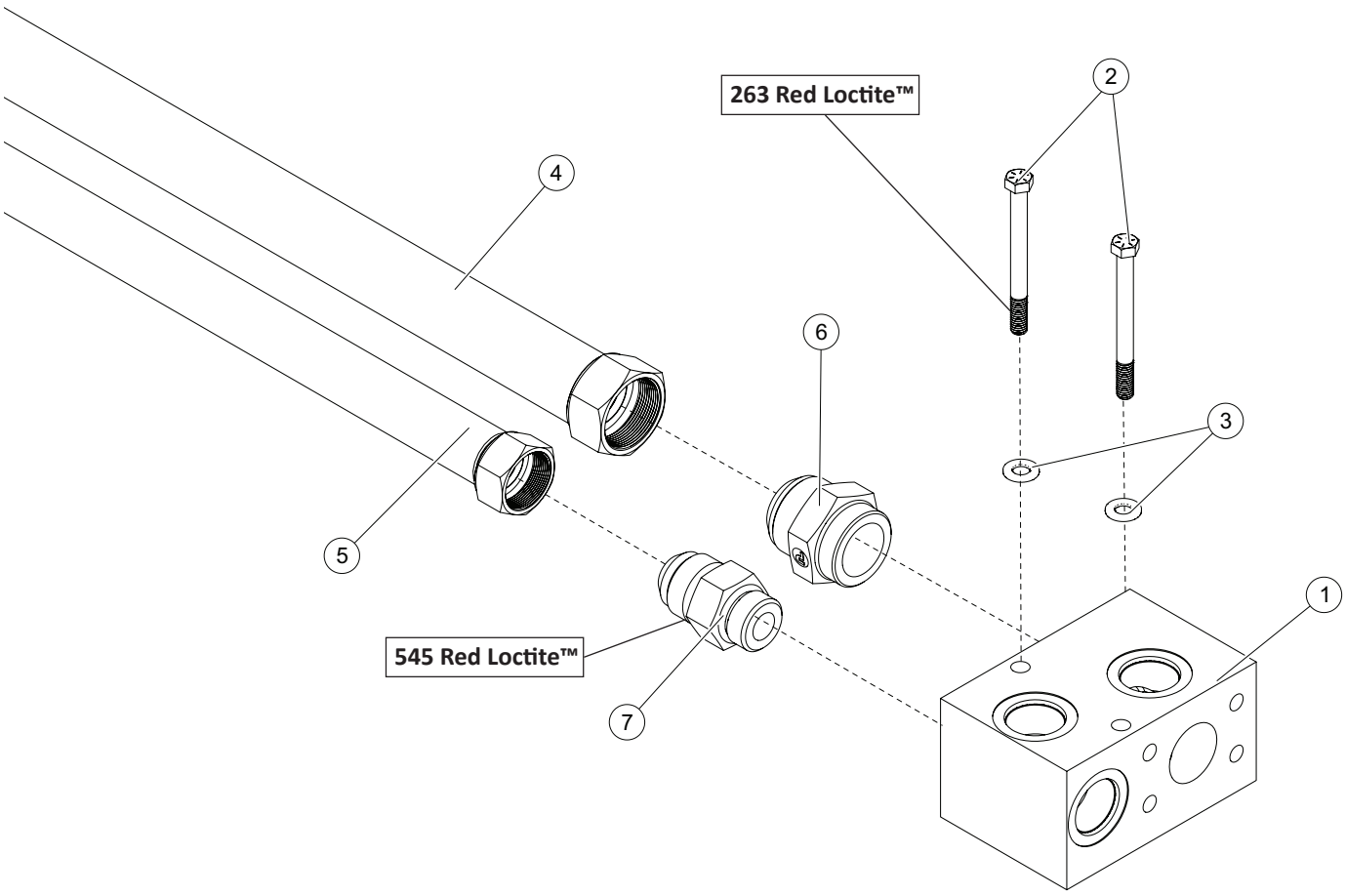


H-00129D 05/24

| Item | Part # | Description | Qty. |
|---|---|---|---|
| 1 | 63280 | MANIFOLD, RETURN | 1 |
| 2 | 15592 | BOLT - .375” X 4” **263 RED LOCTITE™** | 2 |
| 3 | 15528 | WASHER, SAE FLAT - .375” OR 3/8” | 2 |
| 4 | 55166 | TUBELINE, HYD TANK TO BH 45 DEG (SEE NOT | 1 |
| 5 | 55170 | TUBELINE, TANK TO CASE MAN. - C MOD(NOTE | 1 |
| 6 | 22319 | CONNECTOR, STR 24F5OX-S THRML B-PASS GT | 1 |
| 7 | 15497 | CONNECTOR, STR - 16 F5OX-S **545 RED LOCTITE™** | 1 |

# H100-01510 - GULLWING DOOR HYD PUMP

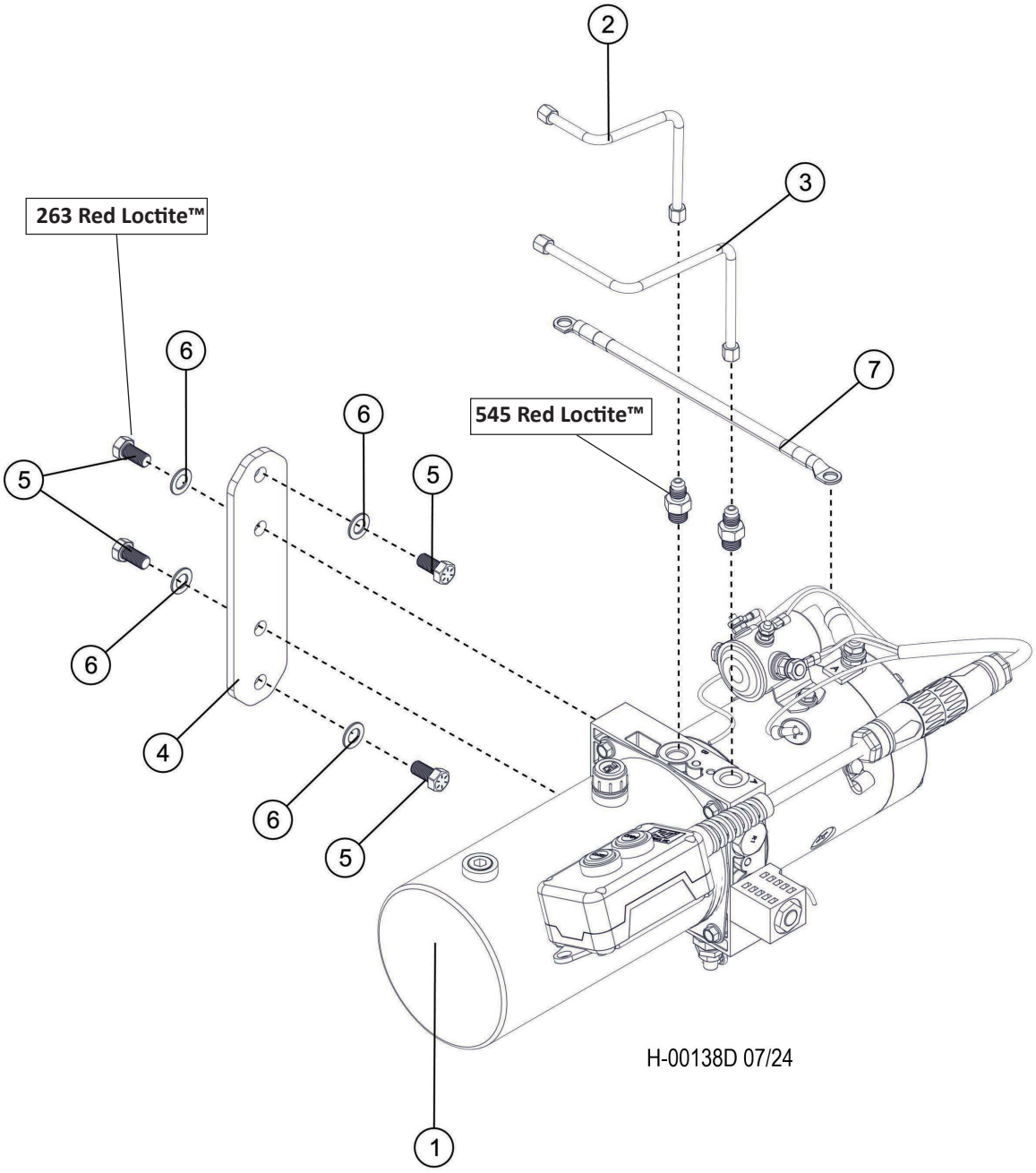


| Item | Part # | Description | Qty. |
|---|---|---|---|
| 1 | 51577 | PUMP, POWER UNIT - GULL WING W/PENDANT | 1 |
| 2 | 55593 | TUBELINE, CANOPY LIFT PUMP TO B PORT | 1 |
| 3 | 55592 | TUBELINE, CANOPY LIFT PUMP A PORT | 1 |
| 4 | 47542 | PLATE, GULLWING PUMP | 1 |
| 5 | 15542 | BOLT - .375" X .75" **263 RED LOCTITE™** | 4 |
| 6 | 15528 | WASHER, SAE FLAT - .375" | 4 |
| 7 | 55336 | CABLE, BATTERY - NEGATIVE - "C" - 24" | 1 |

# H100-01511 - GULLWING DOOR HYD PUMP COMPONENTS

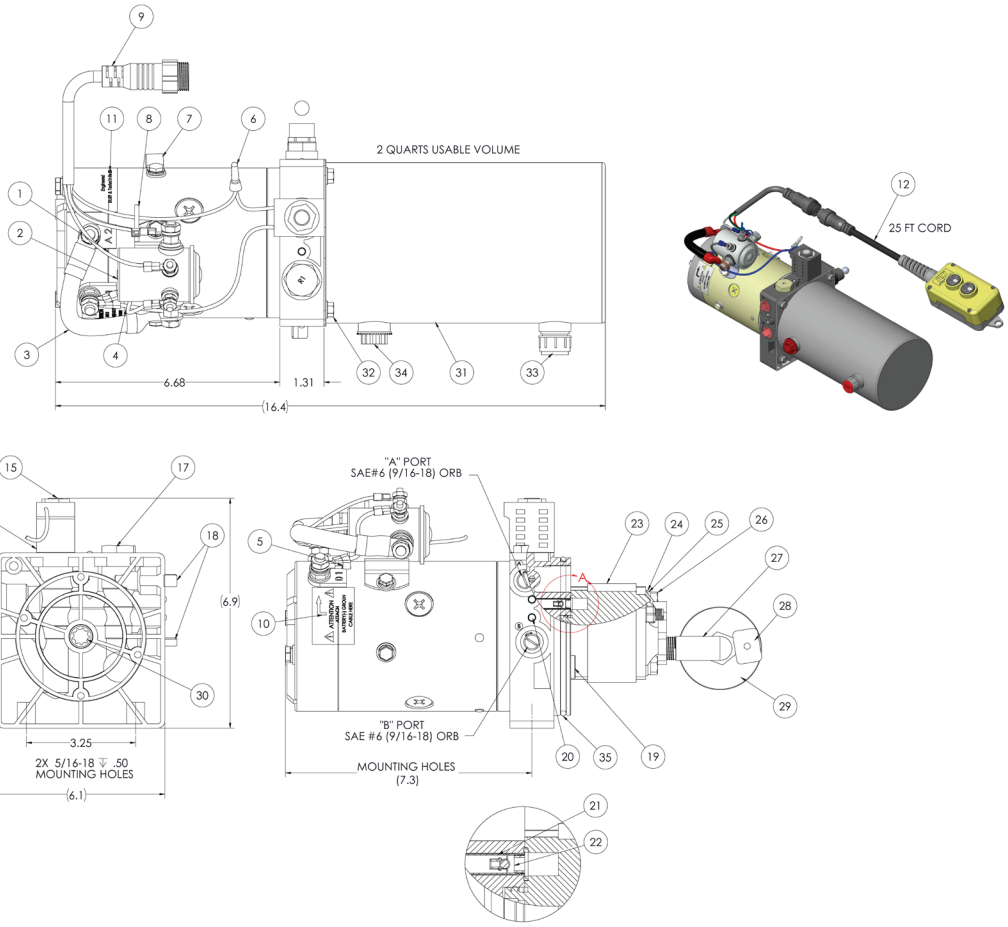


| Item | Part# | Description | Qty. |
|---|---|---|---|
| | 51577 | PUMP, POWER UNIT - GULL WING W/PENDANT | 1 |
| 1 | 2445-1 | 24V DC MOTOR 4.5”O.D. 2.0 KW GOLD, TWO TERMINAL | 1 |
| 2 | 57185 | 24V DC STEEL CASE CONTINOUS DUTY, COPPER TO COPPER START SOLENOID | 1 |
| 3 | 27-1 | TERMINAL WIRE (SOLENOID POWER TERMINAL TO MOTOR POWER TERMINAL) | 1 |
| 4 | 27-16 | GROUND WIRE (MOTOR GROUND TERMINAL TO SOLENOID GROUND TERMNIAL) | 1 |
| 5 | Q30-8 | ELECTRICAL RING TERMINAL 5/16 POST. 22-18 ga | 1 |
| 6 | Q31-2 | NYLON CRIMP CAP - FIT 16-14 | 1 |
| 7 | Q34-9 | NYLON CABLE CLAMP, CLOSE DIA 5/16’’ | 1 |
| 8 | Q37-2 | NYLON BLACK CABLE TIE 8’’ | 1 |
| 9 | 74-23 | TOWER HALF SOLID MOLD CONNECTOR ASSY WITH 8’’ CORD & 4 WIRES | 1 |
| 10 | 31-10 | LABEL, BATTERY GROUND TO MOTOR GROUND TERMINAL | 1 |
| 11 | 31-12 | LABEL, AMERICAN FLAG, ENGINEERED, BUILT & TESTED IN USA | 1 |
| 12 | 395-53 | 2 BUTTON 4 WIRE REMOTE PENDANT W/ MALE SOLID MOLD CYLINDRICAL QUICK DISCONNECT 25’ CORD. | 1 |
| 13 | 58340 | UNIVERSAL MANIFOLD CIRCUIT 108 | 1 |
| 14 | LRV-080-B | CARTRIDGE RELIEF VALVE, ADJUSTABLE SET @ 3700 PSI | 1 |
| 15 | LSV2-08-4CO | 4W2P SPOOL TYPE CARTIDGE SOLENOID VALVE | 1 |
| 16 | 58172 | 24V DC #8 SQUARE COIL W/DUAL WIRE LEADS | 1 |
| 17 | 54318 | SAE #8, 4W2P CAVITY PLUG | 1 |
| 18 | Q5-12 | TAPERED CAP PLUG, 0.47”-0.54” DIA (RED). LDPE | 2 |
| 19 | VPS-6 | SAE #6 (9/16-18) O-RING PLUG | 1 |
| 20 | SX-6A | EXPANDER SEALING PLUG, 6mm ZINC PLATED | 4 |
| 21 | Q56-0313-0093 | 5/16 x .014 x 0.93’’ BRASS TUBING | 1 |
| 22 | CVI-4 | LEE 855 SERIES CHECK VALVE, FORWARD FLOW | 1 |
| 23 | PL-0.63-11T | PRESSURE LOADED GEAR PUMP (0.038 $IN^3/R$) | 1 |
| 24 | Q13-031 | 5/16’’ STEEL FLAT WASHER | 2 |
| 25 | Q14-031 | 5/16’’ STEEL SPLIT LOCK WASHER | 2 |
| 26 | Q16-031-0300 | 5/16-24 x 3.00” HEX HEAD CAP SCREW, GRADE 5 | 2 |
| 27 | 21-1 | 3/8’’ NPT 90 DEGREE ALUMINUM DIE-CAST INLET ELBOW | 1 |
| 28 | 23-1 | RECTANGLE CARBON MAGNET | 1 |
| 29 | 57-6 | 3/8” NPT INLET STRAINER, 120 MESH, PLEATED | 1 |
| 30 | 52-39 | MOTOR / PUMP COUPLING, SAE 9 TOOTH TO 11 TOOTH, 1.67 INCH | 1 |
| 31 | 8080-2 | 2 QUART STEEL DEEP DRAWN RESERVOIR | 1 |
| 32 | Q19-025-0038 | 1/4-20 x 0.375’’ HEX FLANGE HEAD CAP SCREW | 4 |
| 33 | 25-1 | 3/8 NPT 40 MICRON AIR BREATHER | 1 |
| 34 | 58625 | 3/8 NPT PLASTIC THREADED PLUG W/NEOPRENE GASKET | 1 |
| 35 | Q2-4113 | O-RING, I.D. 113mm, C/S 4mm. METRIC BUNA, RESERVOIR | 1 |

# H100-01520 - GULLWING DOOR CYLINDER

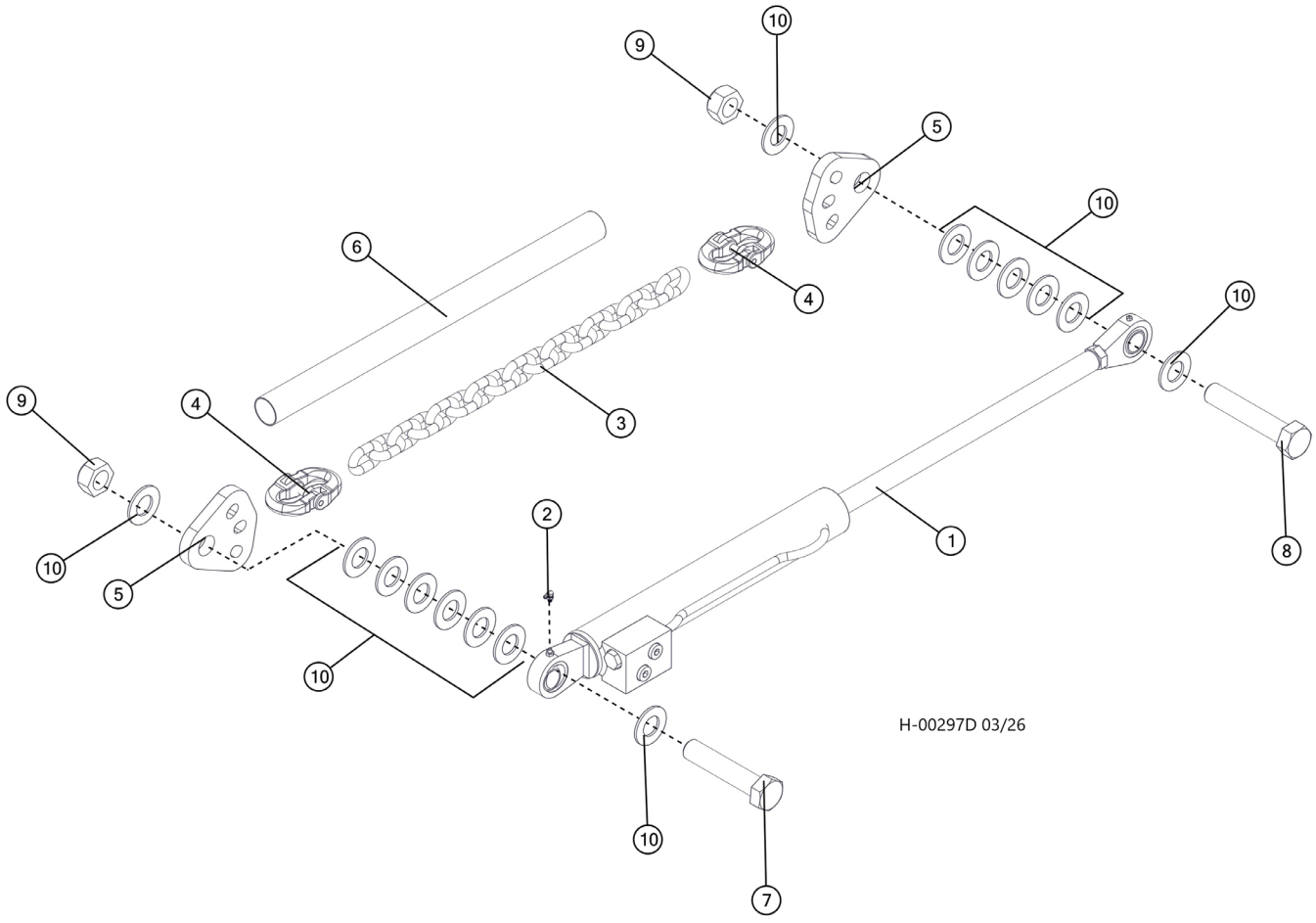


| Item | Part # | Description | Qty. |
|---|---|---|---|
| 1 | 57848.1 | CYLINDER, GULLWING LIFT | 1 |
| 2 | 15662 | FITTING, GREASE - .25-28" - 90 | 1 |
| 3 | 557150 | CHAIN, .50, G100, 17 LINK | 1 |
| 4 | 699270 | SHACKLE, PIVOT, .50", G100 | 2 |
| 5 | 699280 | LINK, HOOD CHN, ADJUST, 1.31" | 2 |
| 6 | 684201 | SLEEVE, PROTECTIVE HOSE - 2.00 X 27.00 | 1 |
| 7 | 700050 | BOLT, HHCS, 1.25-7 X 6.00, GR8, YZ | 1 |
| 8 | 65194 | BOLT, HHCS, 1.25-7 X 6.50, GR8, YZ | 1 |
| 9 | 23989 | NUT, LOCK - 1.25" | 2 |
| 10 | 22531 | WASHER, SAE FLAT - 1.25" | 15 |

# H100-01521 - GULLWING DOOR CYLINDER COMPONENTS

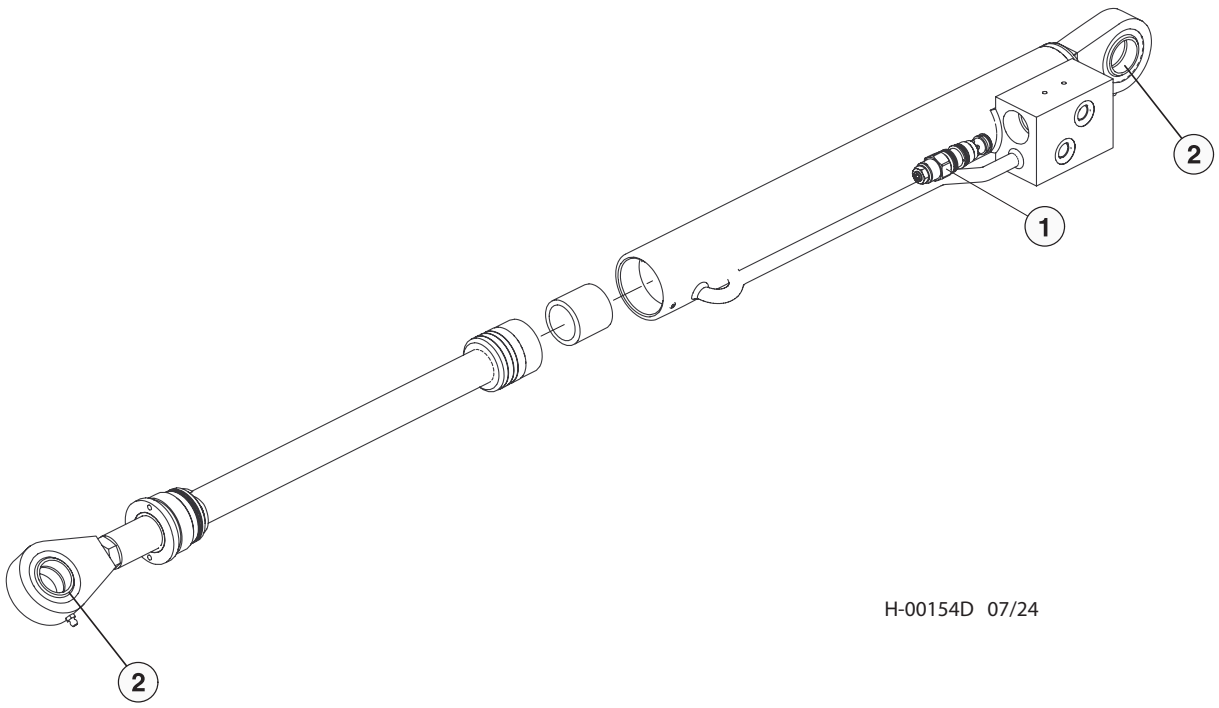


| Item | Part # | Description | Qty. |
|---|---|---|---|
| | 57848 | CYLINDER, GULLWING LIFT | 1 |
| 1 | 58009 | CARTRIDGE, COUNTER BALANCE | 1 |
| 2 | GEZ020ES | SPHERICAL BUSHING | 2 |
| | 59046 | SEAL KIT | 1 |

# MAIN/REVOLVING FRAME AND RELATED PARTS - (J)

# J100-00000 - BULKHEAD FITTING BRACKET

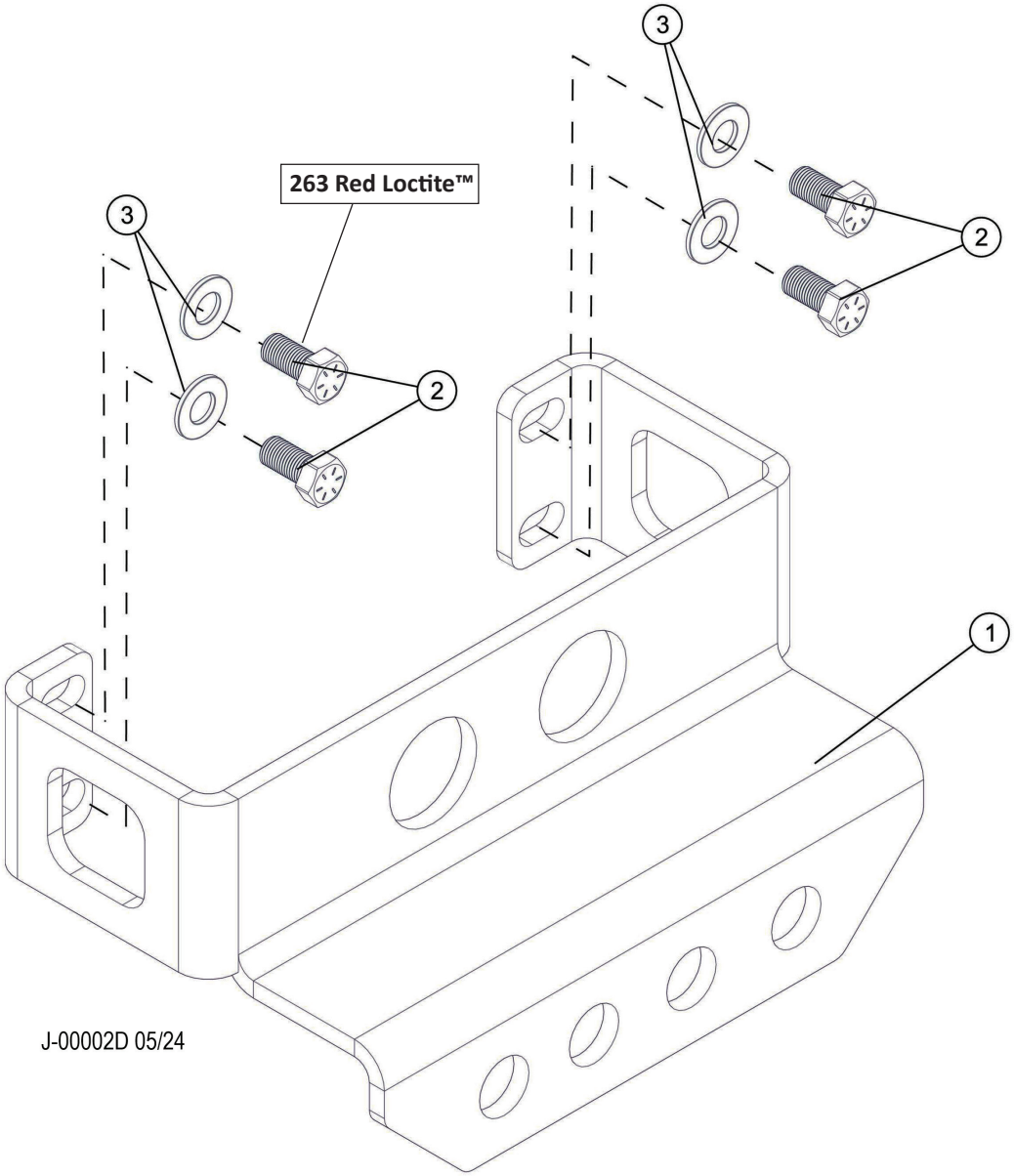


| Item | Part # | Description | Qty. |
|---|---|---|---|
| 1 | 60559 | BULKHEAD, FRONT - TM | 1 |
| 2 | 15542 | BOLT - .375” X .75” **263 RED LOCTITE™** | 4 |
| 3 | 15528 | WASHER, SAE FLAT - .375” OR 3/8” | 4 |

# J100-00005 - REVOLVING FRAME

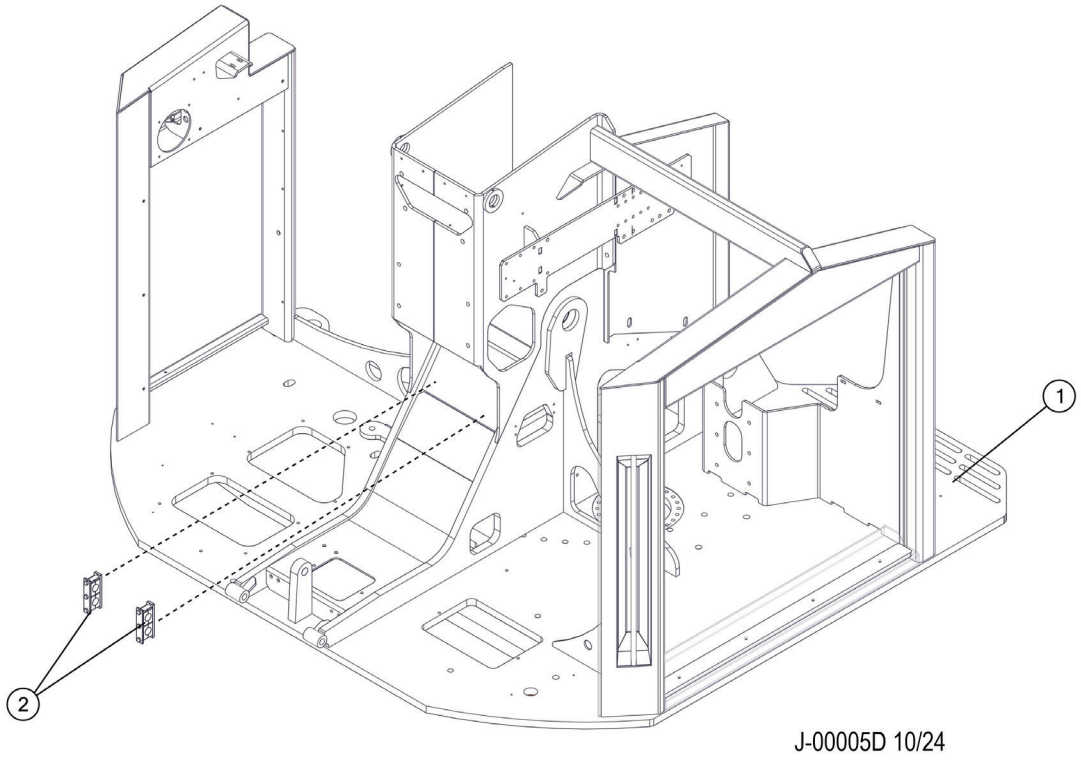


| Item | Part # | Description | Qty. |
|---|---|---|---|
| 1 | 60605 | WELDMENT, D - UPPER | 1 |
| 2 | 58050 | BRACKET, HOSE CLAMP | 2 |

# J100-00010 - REVO FRAME GREASE HOSES

**NOTE: HYDRAULIC FITTINGS GET 545 LOCTITE™**

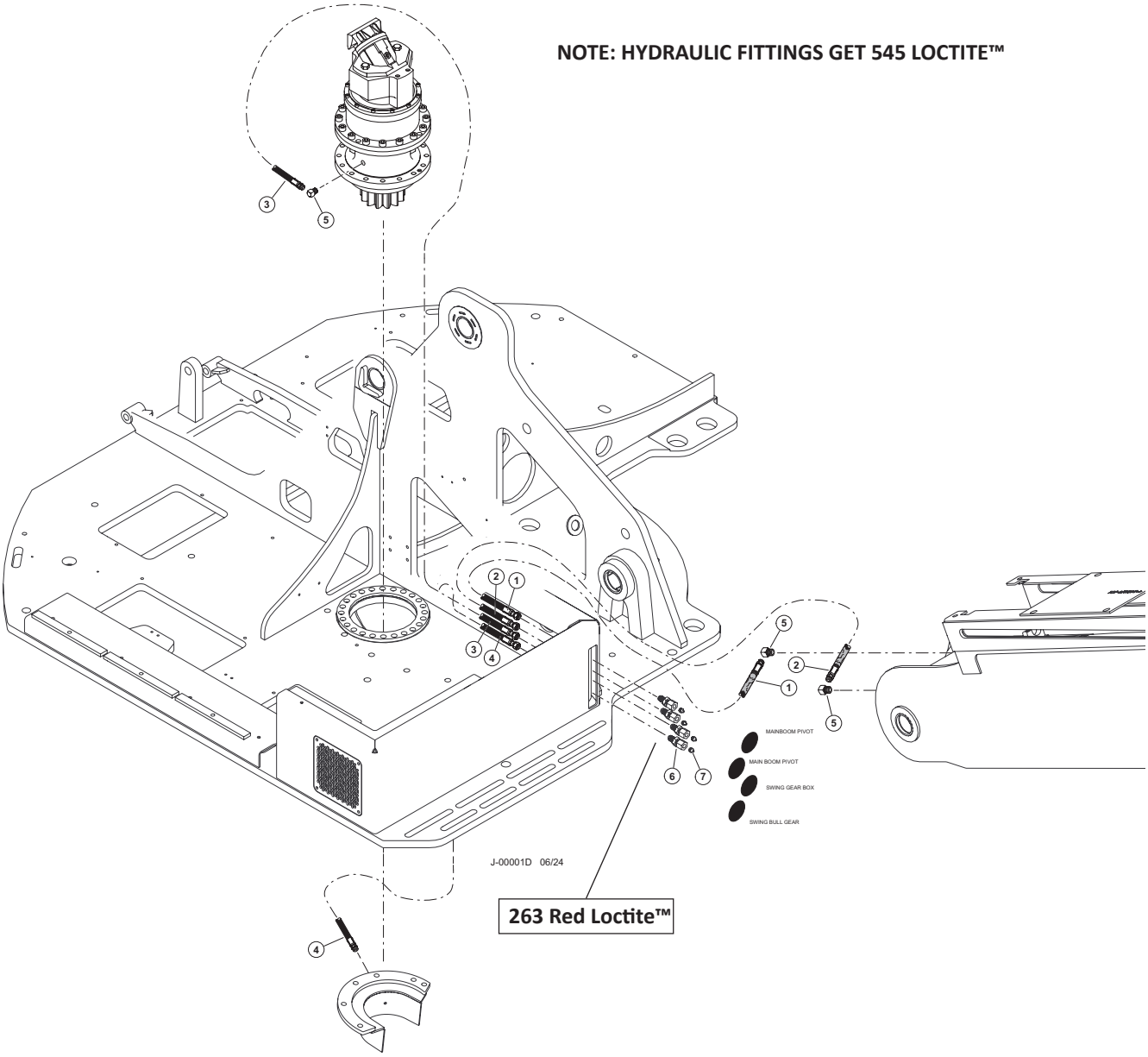


| Item | Part # | Description | Qty. |
|---|---|---|---|
| 1 | 55638 - (KIT) | HOSE ASSY - HLBD51 02- 02PS-04JS-SW - (MAIN BOOM PIN) | 1 |
| 2 | 55638 - (KIT) | HOSE ASSY - HLBD51 02- 02PS-04JS-SW - (MAIN BOOM PIN) | 1 |
| 3 | 57724 | HOSE ASSY - 2054 02-02PS-04JS SW - (SWING GEAR BOX) | 1 |
| 4 | 55638 - (KIT) | HOSE ASSY - HLBD51 02- 02PS-04JS-SW - (SWING BULL GEAR) | 1 |
| 5 | 22281 | ELBOW, 1/8-27 NPTF(M), 1/8-17 NPTF(F),90 | 3 |
| 6 | 15658 | CONNECTOR, STR BULKHEAD - 2239-2-4S **263 RED LOCTITE™** | 4 |
| 7 | 58394 | ZERK, GREASE - 1/8” 90DEG | 4 |

# J100-00011 - KIT, FRONT STEP EXT - EU

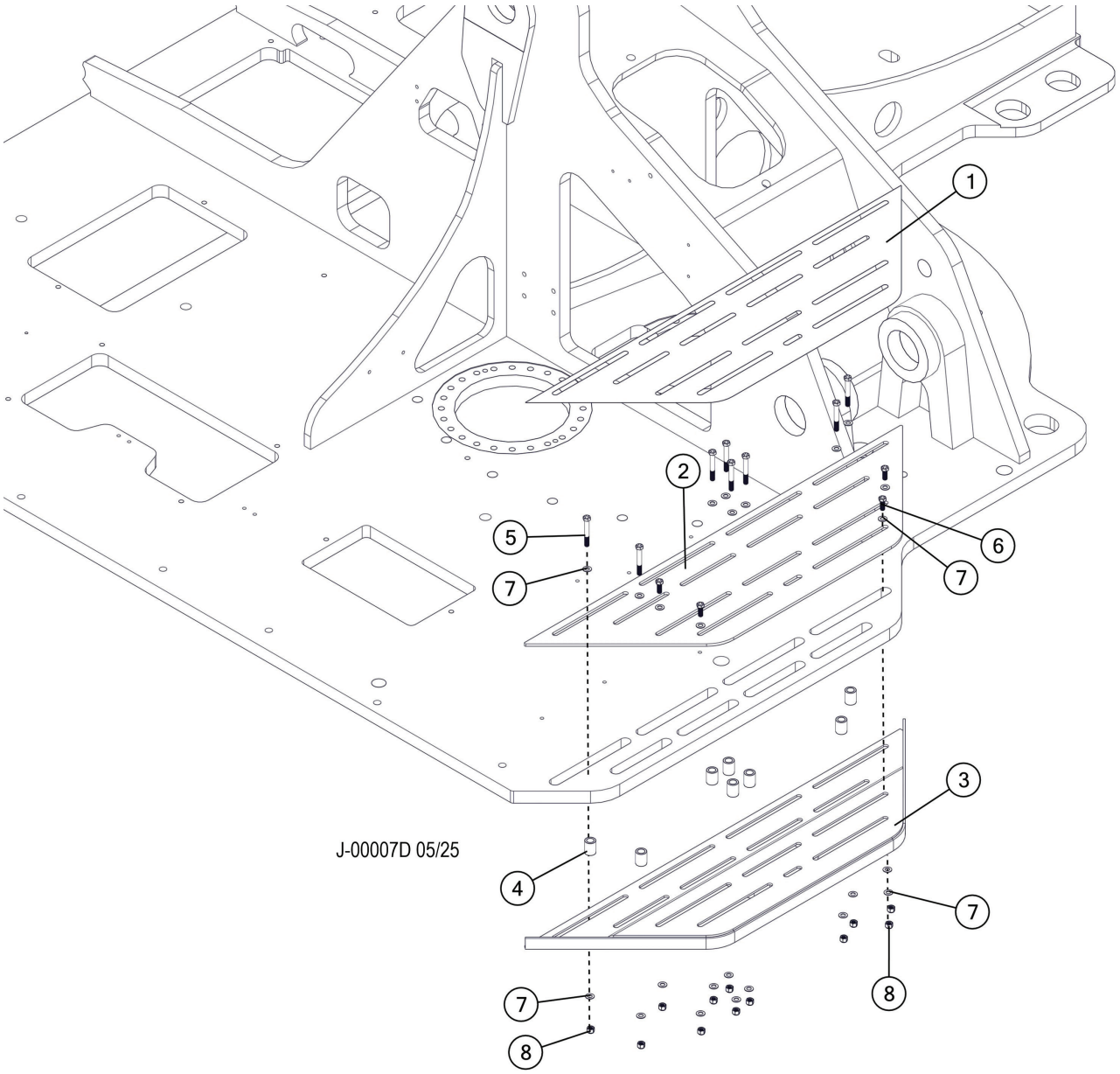


| Item | Part # | Description | Qty. |
|---|---|---|---|
| 1 | 659940 | NON-SKID TAPE, FRONT STEP EXT~EU | 1 |
| 2 | 60792 | PLATE, AUX FRONT STEP TOP | 1 |
| 3 | 60791 | WELDMENT, AUX FRONT STEP | 1 |
| 4 | 607990 | SPACER, 0.625 X 0.965 X 1.25 LG | 8 |
| 5 | 16365 | BOLT - .375" X 2.75" | 8 |
| 6 | 11707 | BOLT - .375" X 1" | 4 |
| 7 | 10802 | WASHER, FLAT - .375" | 24 |
| 8 | 10813 | NUT, LOCK - .375" | 12 |

# OPERATORS COMPARTMENT AND CONTROL SYSTEM - (K)

# K100-00000 - CABIN SEAT, SEATS INC

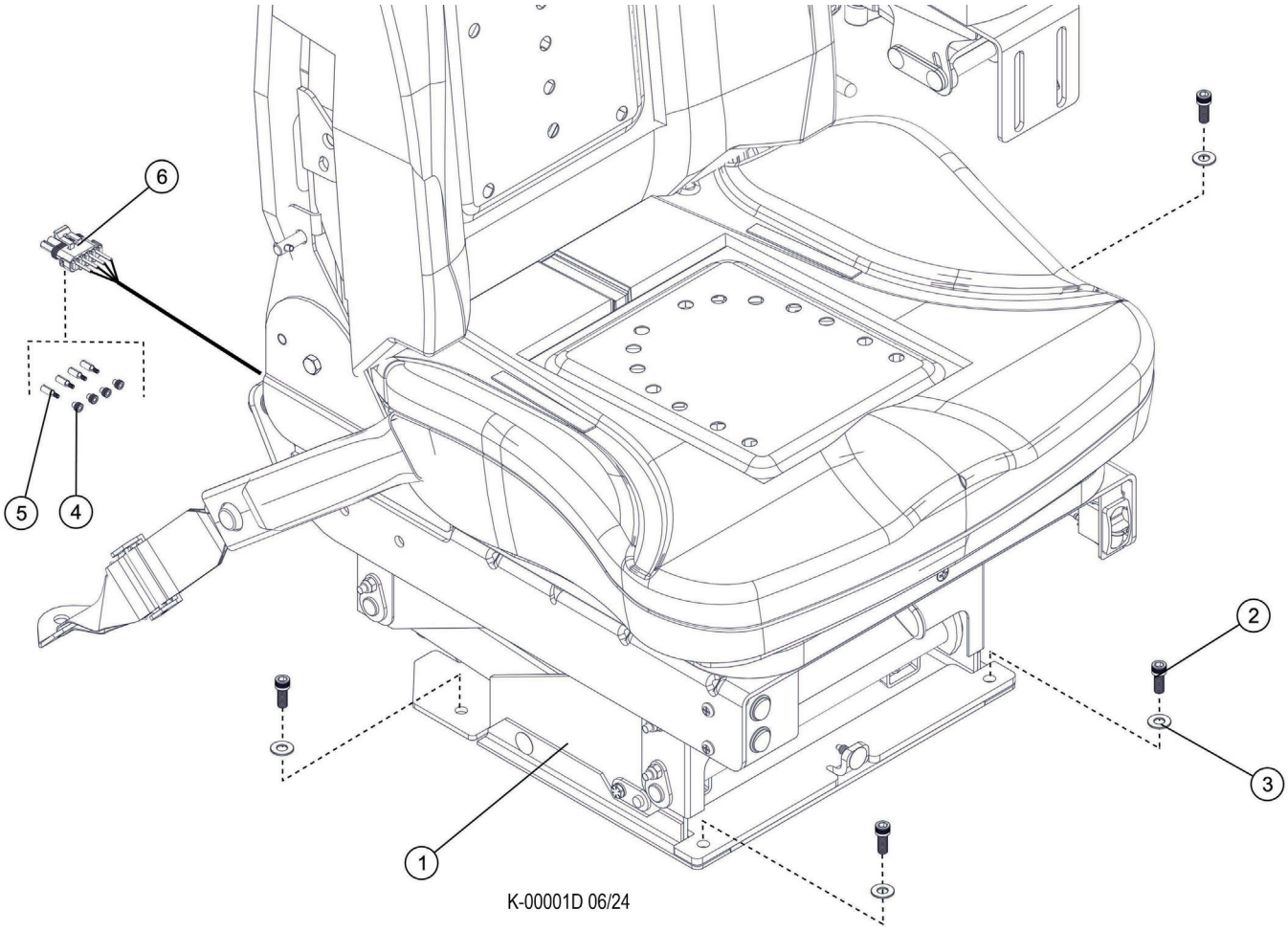


| Item | Part # | Description | Qty. |
|---|---|---|---|
| 1 | 57723 | SEAT ASSY - SEAT INC. (HEAT/VENT) | 1 |
| 2 | 58383 | BOLT - .5/16-18 X 3/4’ SOCKET HEAD | 4 |
| 3 | 15559 | WASHER, SAE FLAT - .3125” | 4 |
| 4 | 22225 | SEAL, WIRE END (WEATHER PACK) | 4 |
| 5 | 23135 | TERMINAL, FEMALE (WEATHER PACK) | 1 |
| 6 | 23131 | PLUG, FEMALE - 4 CONTACT (WEATHER PACK) | |

# K100-00001 - CABIN SEAT, SEATS INC

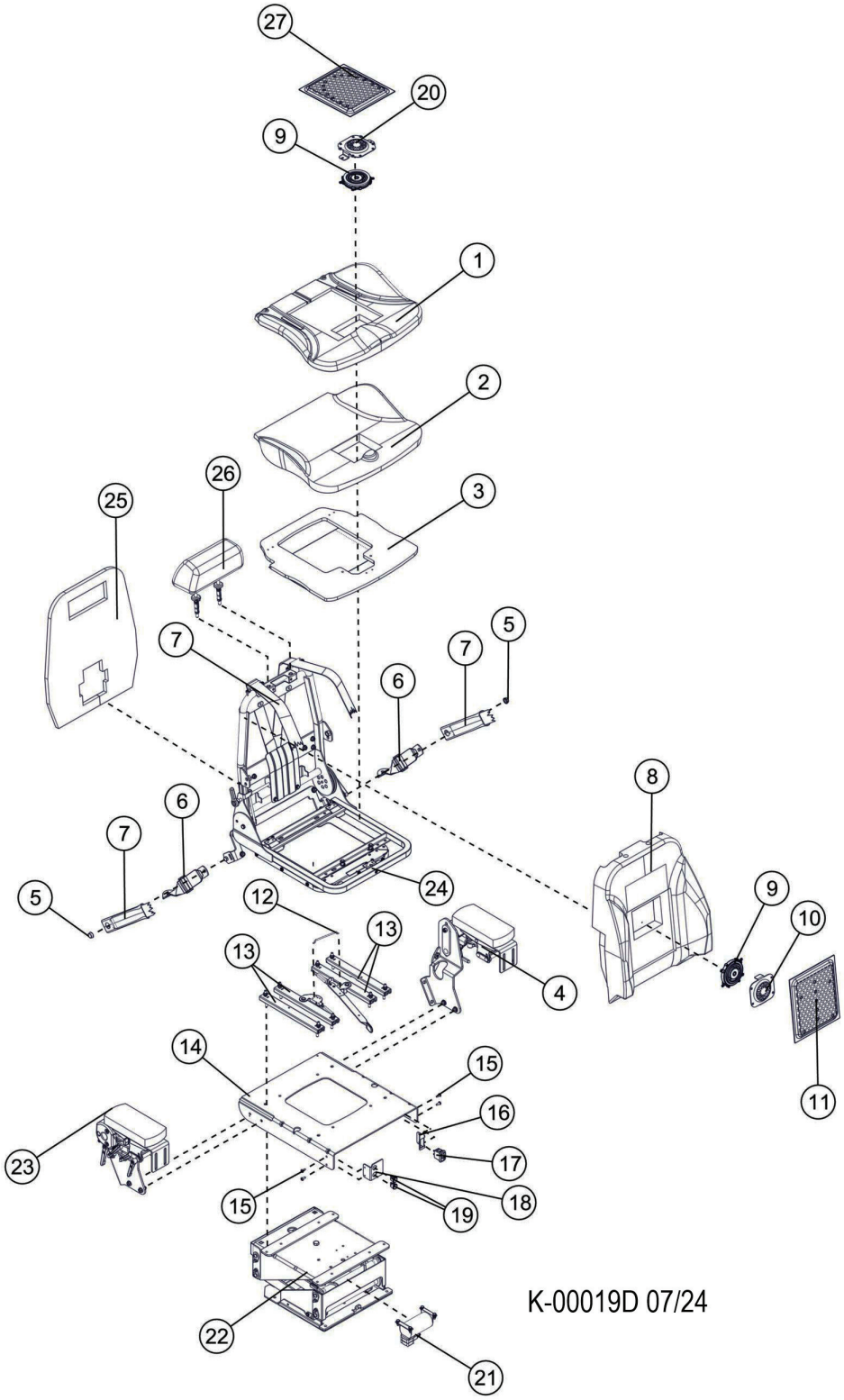

# K100-00001 - CABIN SEAT, SEATS INC

| Item | Part # | Description | Qty. |
|---|---|---|---|
| | 57723 | SEAT ASSY - SEAT INC. ( HEAT/VENT) | 1 |
| 1 | 517866-00 | CUSHION, SEAT | 1 |
| 2 | 517865-00 | BASE, SEAT | 1 |
| 3 | 517867-00 | SEAT BOTTOM | 1 |
| 4 | 188381JN348 | ARMEST, LH | 1 |
| 5 | 708696-00 | SEATBELT PLUG | 2 |
| 6 | 704876-00 | SEATBELT TETHER ASSEMBLY | 2 |
| 7 | 782938-00 | SEATBELT | 1 |
| 8 | 518065 | BACKREST | 1 |
| 9 | 703836-02 | HEATER | 2 |
| 10 | 516431-02 | SEAT BASE COVER, FAN | 1 |
| 11 | 312771283283-00 | BACKREST HEATER FILTER | 1 |
| 12 | 506856-02 | ADJUSTMENT PIN | 1 |
| 13 | 53296 | ADJUSTMENT BRACKET ASSEMBLY | 1 |
| 14 | 314422-00 | LOWER FRAME ASSEMBLY | 1 |
| 15 | 708490 | FASTENER | 4 |
| 16 | 512784 | BRACKET | 4 |
| 17 | 708884 | SEAT ADJUSTMENT SWITCH | 1 |
| 18 | 518050-00 | BRACKET | 1 |
| 19 | 782434 | SWITCH | 2 |
| 20 | 517637-00 | BACKREST COVER, FAN | 1 |
| 21 | 109879PS | COMPRESSOR PUMP | 1 |
| 22 | 314434 | SEAT FRAME BASE ADJUSTMENT ASSEMBLY ARMEST, RH | 1 |
| 23 | 188382JN348 | ARMEST, RH | 1 |
| 24 | 314433-00 | SEAT FRAME | 1 |
| 25 | 703661-01 | BACKREST PANEL | 1 |
| 26 | 55994 | HEADREST | 1 |
| 27 | 55998 | SEAT BASE HEATER FILTER | 1 |
| * | 55995 | AIR SPRING ASSEMBLY KIT | 1 |
| * | 55997 | SHOCK ASORBER HEAVY DUTY | 1 |

***MEANS NOT SHOWN**

# K100-00002 - CABIN SEAT, SEATS INC

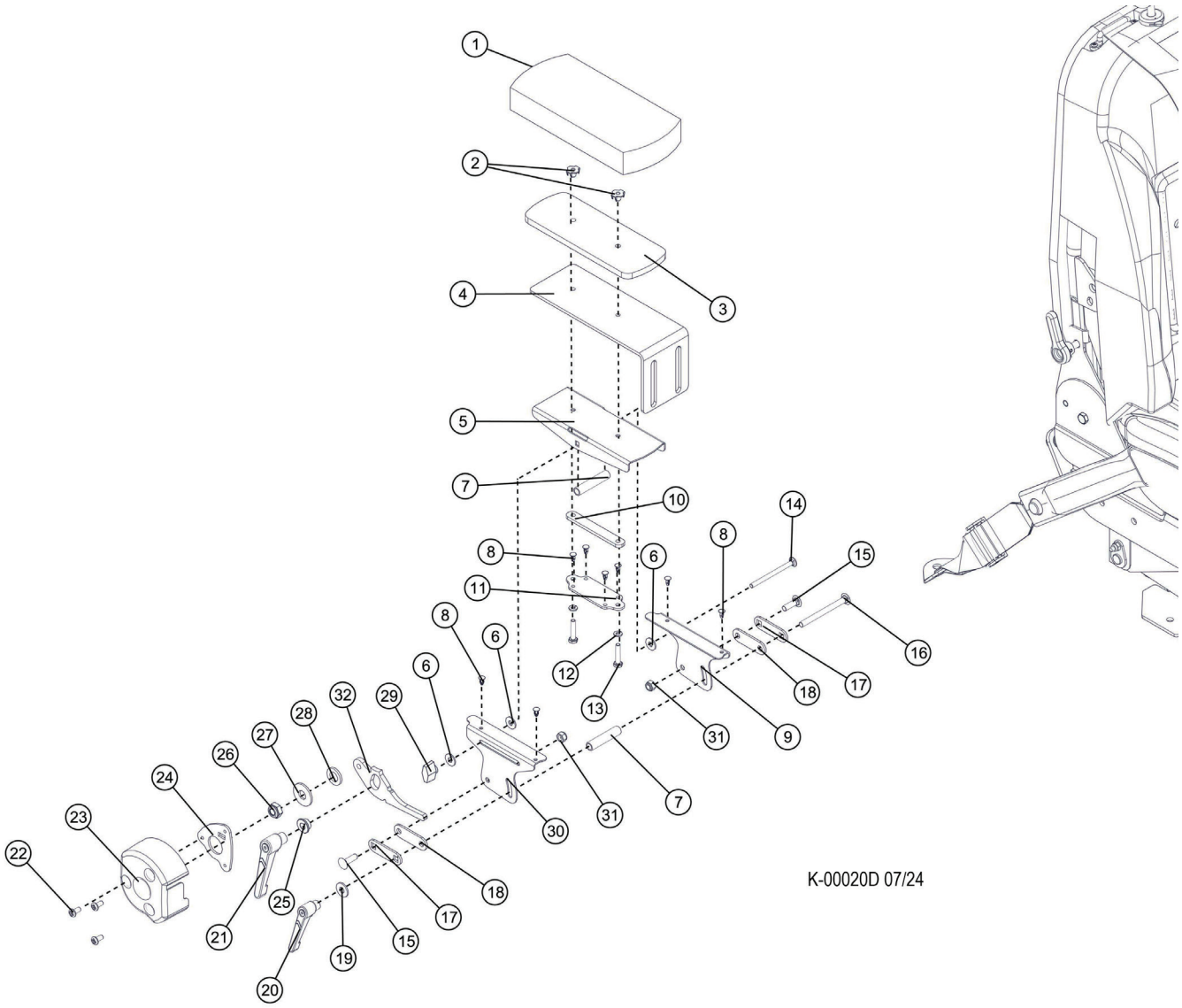

# K100-00002 - CABIN SEAT, SEATS INC

| Item | Part # | Description | Qty. |
|---|---|---|---|
| | 188382JN348 | ARM REST, SITTAB ARMFLEX - RH | 1 |
| | 188381JN348 | ARM REST, SITTAB ARMFLEX - LH | 1 |
| 1 | 703848-01 | PAD | 1 |
| 2 | 707029 | NUT | 2 |
| 3 | 516610-01 | PLATE | 1 |
| 4 | 518072-00 | COVER | 1 |
| 5 | 518071-00 | PLATE | 1 |
| 6 | 782549 | WASHER | 2 |
| 7 | 516609 | SPACER | 2 |
| 8 | 782506-00 | PLASTIC INSERT | 8 |
| 9 | 516607 | BRACKET | 1 |
| 10 | 516611-00 | PLATE | 2 |
| 11 | 516612-00 | STOP | 1 |
| 12 | 707085 | BUSHING | 1 |
| 13 | 719644 | BOLT | 1 |
| 14 | 782503 | FASTENER | 1 |
| 15 | 719744 | MOUNT FASTENER | 2 |
| 16 | 782501-00 | FASTENER | 1 |
| 17 | 516605-01 | PLATE | 2 |
| 18 | 782531 | SPACER | 2 |
| 19 | 782013 | BUSHING | 1 |
| 20 | 782504-00 | HANDLE | 1 |
| 21 | 708801 | HANDLE | 1 |
| 22 | 782552 | BOLT | 1 |
| 23 | 782509-04 | COVER | 1 |
| 24 | 314429-00 | SPACER | 1 |
| 25 | 511880PL-02 | BUSHING | 1 |
| 26 | 707116 | NUT | 1 |
| 27 | 782042 | WASHER | 1 |
| 28 | 707871 | WASHER | 1 |
| 29 | 782505 | KNOB | 1 |
| 30 | 516606 | BRACKET | 1 |
| 31 | 707314 | NUT | 2 |
| 32 | 517183-02 | ADJUSTMENT LEVER | 1 |

# K100-00003 - CABIN SEAT, SEATS INC

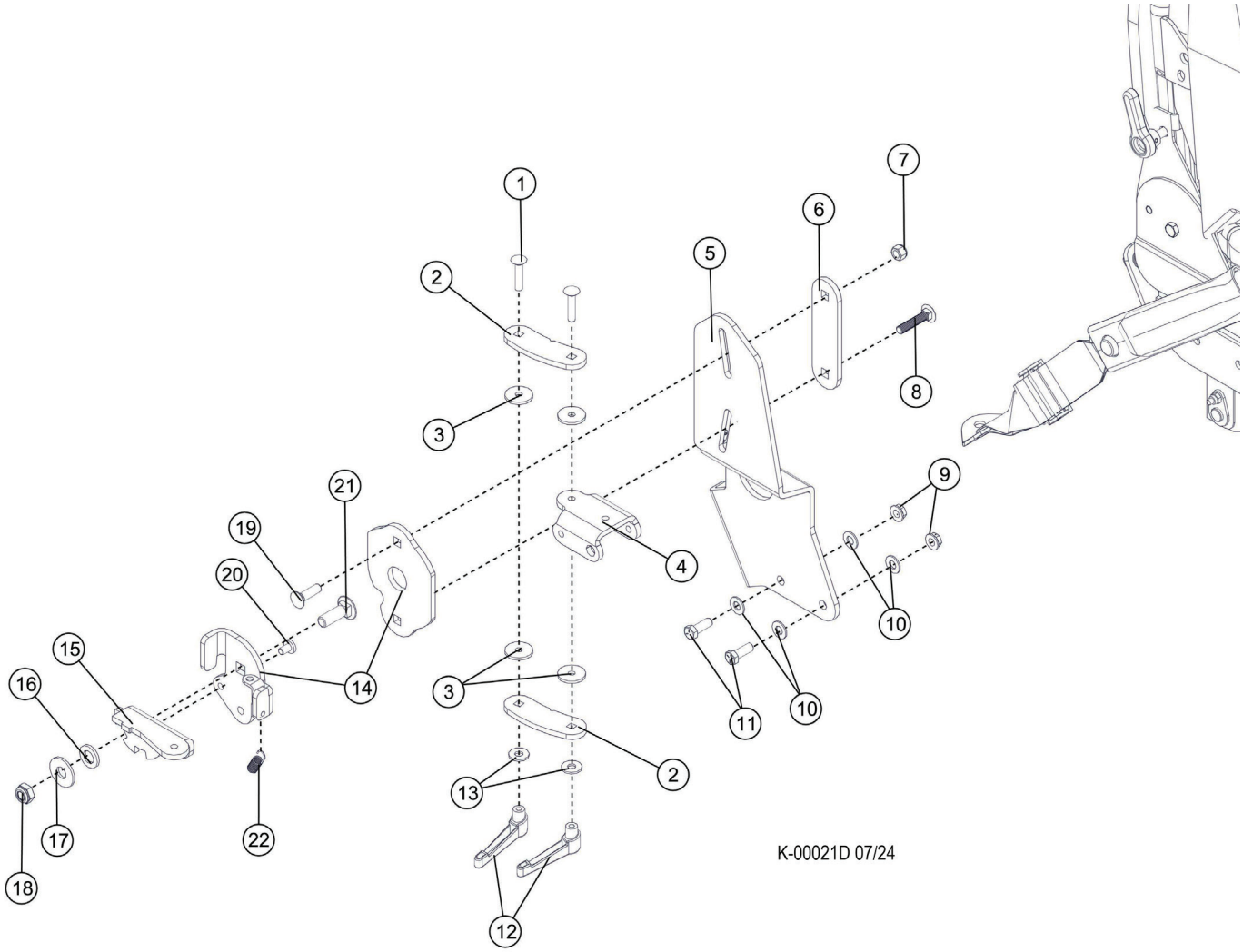

# K100-00003 - CABIN SEAT, SEATS INC

| Item | Part # | Description | Qty. |
|---|---|---|---|
| | 188382JN348 | ARM REST, SITTAB ARMFLEX - RH | 1 |
| | 188381JN348 | ARM REST, SITTAB ARMFLEX - LH | 1 |
| 1 | 719750 | FASTENER | 2 |
| 2 | 518075 | BRACKET | 2 |
| 3 | 782530-00 | BUSHING | 4 |
| 4 | 516603-03 | BRACKET | 1 |
| 5 | 518081-00 | BRACKET | 1 |
| 6 | 516599-00 | BRACKET | 2 |
| 7 | 707251-2 | NUT | 1 |
| 8 | 708856-00 | BOLT | 1 |
| 9 | 707565 | NUT | 2 |
| 10 | 782550 | WASHER | 4 |
| 11 | 707195 | BOLT | 2 |
| 12 | 782504 | HANDLE | 2 |
| 13 | 782013 | WASHER | 2 |
| 14 | 314428-00 | BRACKET | 1 |
| 15 | 314429-00 | BRACKET | 1 |
| 16 | 707871 | WASHER | 1 |
| 17 | 782042 | WASHER | 1 |
| 18 | 707116 | NUT | 1 |
| 19 | 782551 | BOLT | 1 |
| 20 | 517182 | BOLT | 1 |
| 21 | 782502-00 | BOLT | 1 |
| 22 | 708830AA | SPRING | 1 |

# K-2241300 - CABIN SEAT - BE-GE

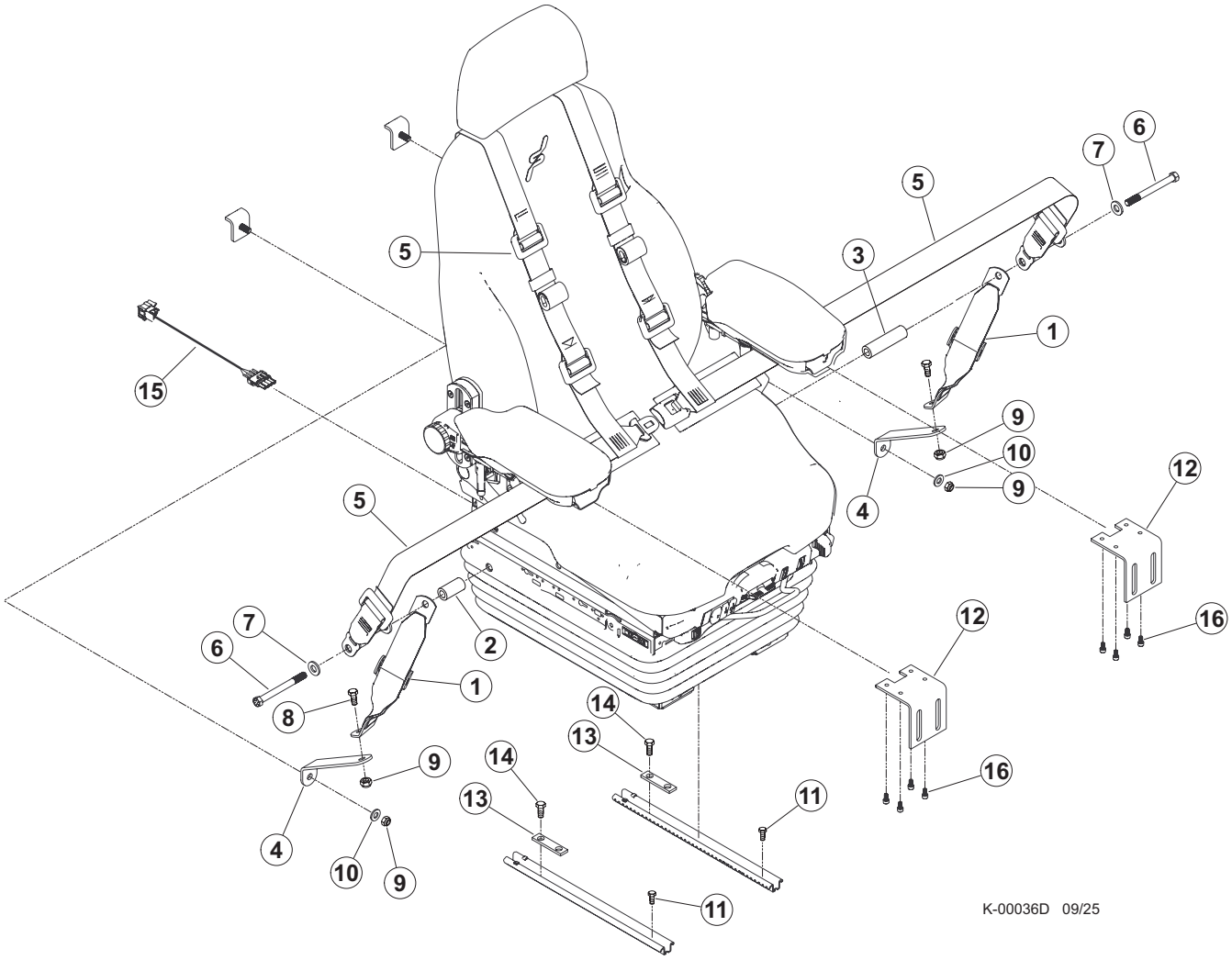


| Item | Part # | Description | Qty. |
|---|---|---|---|
| | 57840 | SEAT ASSEMBLY (BE-GE W/ HEAT/VENT/3 PT) | 1 |
| 1 | 53948 | TETHER, SEAT HOLD DOWN (PAIR) | 1 |
| 2 | - | SPACER - SHORT | 1 |
| 3 | - | SPACER - LONG | 1 |
| 4 | 60566 | EXTENSION, SEAT TETHER | 2 |
| 5 | 610623 | SEAT BELT ASSEMBLY | 1 |
| 6 | 58385 | BOLT - 7/16-20 X 4.5” HEX HEAD | 2 |
| 7 | 10803 | WASHER, FLAT - .4375” | 2 |
| 8 | 10783 | BOLT - .5” X 1” | 2 |
| 9 | 10815 | NUT, LOCK - .5” | 4 |
| 10 | 15534 | WASHER, SAE FLAT - .5” | 2 |
| 11 | 53906 | BOLT, ALLEN HEAD - .3125” X .5” | 2 |
| 12 | 46845 | BRACKET, JOYSTICK POD MOUNT - KAB | 2 |
| 13 | 690700 | WASHER. SEAT | 2 |
| 14 | 58383 | BOLT - .5/16-18 X 3/4’ SOCKET HEAD | 2 |
| 15 | 57935 | HARNESS, BE-GE SEAT ADAPTER | 1 |
| 16 | 16134 | BOLT, ALLEN HEAD - 6MM X 12MM | 8 |

# K100-00011 - CABIN SEAT - BE-GE

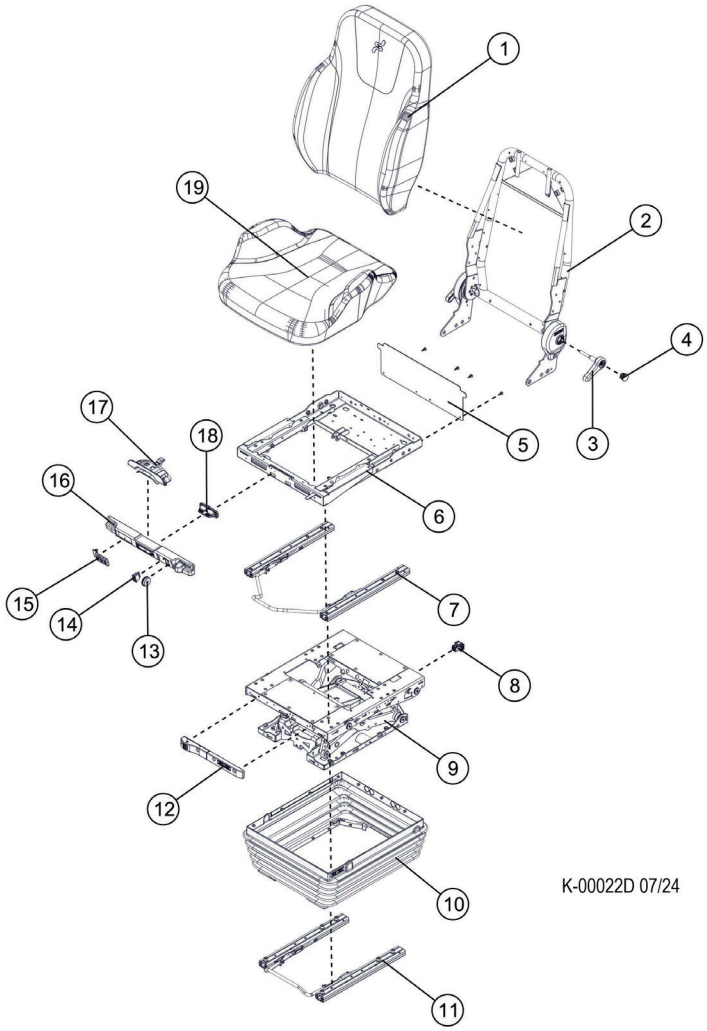


| Item | Part # | Description | Qty. |
|---|---|---|---|
| | 57840 | SEAT ASSEMBLY, SEATS INC. HEAT / AIR RIDE | 1 |
| 1 | 632104P | SEAT BACK CUSION | 1 |
| 2 | 632007P | UPPER FRAME ASSEMBLY | 1 |
| 3 | 628833 | SEAT BACK ADJUSTMENT LEVER | 2 |
| 4 | 628834 | LEVER CAP | 2 |
| 5 | 632080P | FRAME BASE BACKER (WITH 4 SCREWS) | 1 |
| - | 632079 | FRAME BASE BACKER (ONLY) | 1 |
| 6 | 632004P | LOWER FRAME ASSEMBLY | 1 |
| 7 | 632082P | SEAT LATERAL ADJUSMENT LEVER ASSM. | 1 |
| 8 | 632198P | SEAT CONTROLS CIRCUIT BREAKER | 1 |
| 9 | 632220P | FRAME BASE VERTICAL ADJUSMENT LEVER ASSM. | 1 |
| 10 | 632179P | COVER, AIR RIDE | 1 |
| 11 | 632248P | LEVER, OVERALL SEAT/LOWER ASSEMBLY LATERAL ADJUSTMENT | 1 |
| 12 | 632292P | COVER, SHOCK OBSORBER | 1 |
| 13 | 631931 | SWITCH, AIR VENT | 1 |
| 14 | 660590 | SWITCH, HEAT TEMP. CONTROL | 1 |
| 15 | 632017P | SWITCH, LUMBAR/AIR SIDE-SHOULDER CONTROLS | 1 |
| 16 | 632005P | COVER, SEAT CONTROLS UPPER | 1 |
| 17 | 631305P | SEAT BASE LATERAL ADJUSTMENT | 1 |
| 18 | 631999 | SEAT HEIGHT ADJUSTMENT | 1 |
| 19 | 632100P | SEAT BASE CUSHION | 1 |
| * | 55996 | AIR SPRING | 1 |
| * | 56019 | GAS SPRING | 1 |
| * | 56020 | COMPRESSOR, SEAT | 1 |

***MEANS NOT SHOWN**

# K100-00020 - CABIN DOORS

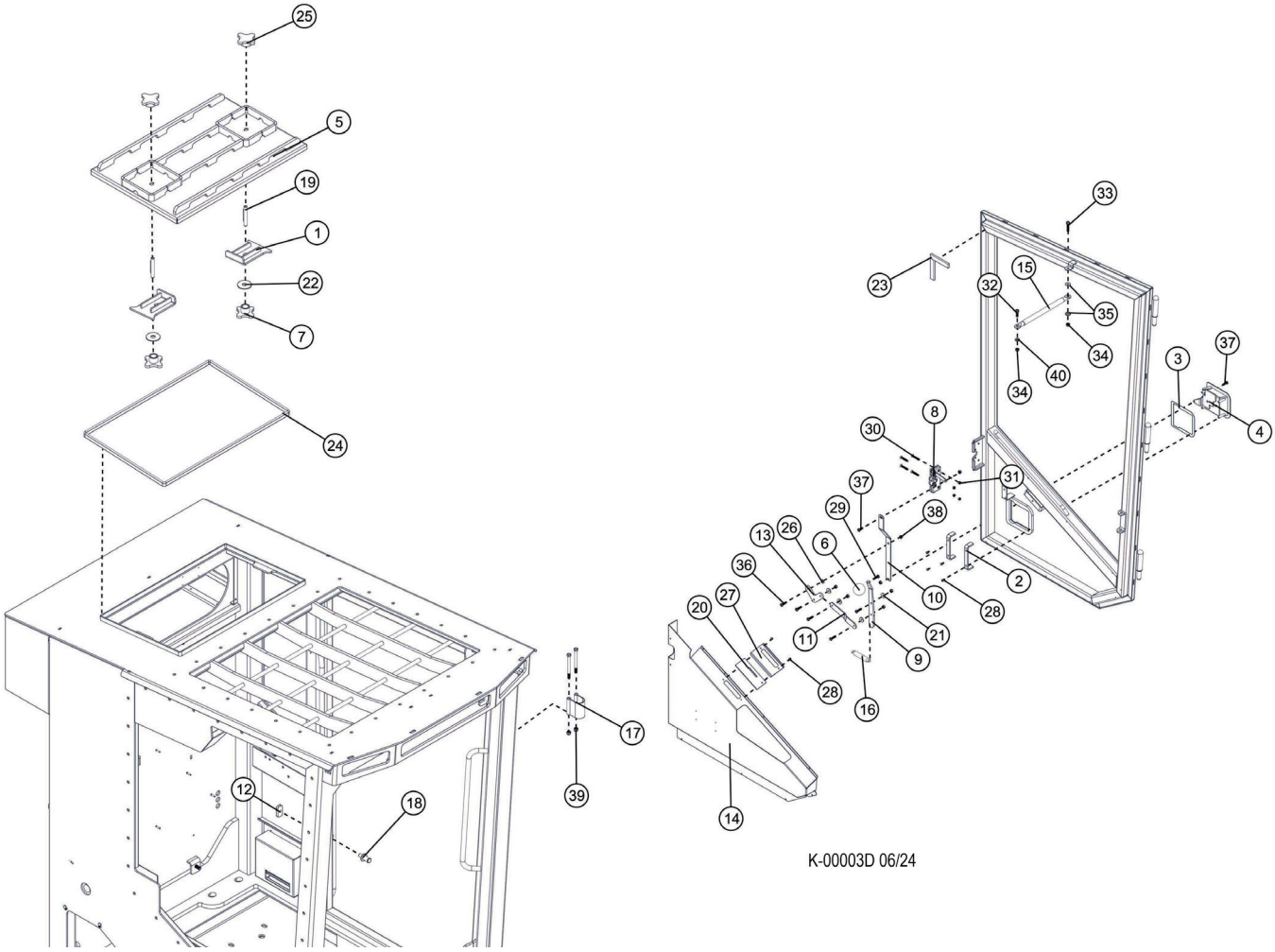

# K100-00020 - CABIN DOORS

| Item | Part # | Description | Qty. |
|---|---|---|---|
| 1 | 49509 | BRACKET, ESCAPE HATCH - D CAB | 2 |
| 2 | 47454 | BRACKET, PADDLE HANDLE | 2 |
| 3 | 57863 | GASKET, HANDLE - OUTSIDE CAB DOOR | 1 |
| 4 | 55015 | HANDLE, DOOR - OUTSIDE - RH CAB B/D SER | 1 |
| 5 | 49190 | HATCH, ESCAPE TOP CAB - D SERIES | 1 |
| 6 | 57826 | KNOB, DOOR HANDLE - ROUND BALL **S/N: UP TO 1270** | 1 |
| 6 | 703210 | KNOB, DOOR HANDLE, .375-24 THREAD, 1.375, DIA **S/N: 1270 & FORWARD** | 1 |
| 7 | 49511 | KNOB. STAR | 2 |
| 8 | 55118 | LATCH, DOOR - B/D SERIES (INNER) (RH CA | 1 |
| 9 | 49210 | LEVER, DOOR RELEASE **S/N: UP TO 1270** | 1 |
| 9 | 693380 | LEVER, DOOR RELEASE **S/N: 1270 & FORWARD** | 1 |
| 10 | 49200 | LINK, DOOR ACTUATOR - VERTICAL | 1 |
| 11 | 49209 | LINK, DOOR LATCH | 1 |
| 12 | 62127 | MOUNT, STRIKER (1050594) | 1 |
| 13 | 47456 | PIVOT LINK, DOOR LATCH | 1 |
| 14 | 49201 | SCHROUD, DOOR - FORMED | 1 |
| 15 | 55121 | SHOCK, GAS - CAB DOOR “C/D” SERIES | 1 |
| 16 | 57900 | SPRING, INNER DOOR TENSION - D-SERIES | 1 |
| 17 | 57855 | STRAP, DOOR - D-SERIES CAB | 1 |
| 18 | 49175 | STRIKER, STUD - C-SERIES CAB | 1 |
| 19 | 49516 | STUD, 2 WAY - D CAB | 2 |
| 20 | 49213 | TRIM, RUBBER INNER DOOR HANDLE - D-SERIE | 1 |
| 21 | 57827 | WASHER, PLASTIC 1/4” (CAB) | 4 |
| 22 | 57828 | WASHER, RUBBER - 3/4” (CAB) | 2 |
| 23 | 18126 | WEATHERSTRIPPING, RUBBER-DOOR SEAL | A/R |
| 24 | 24925 | CHANNEL, EDGE PROTECTOR - 3/16”BULB(STR) | 10 |
| 25 | 49514 | KNOB, STAR D CAB | 2 |
| 26 | 57832 | PLASTIC WASHER | 1 |
| 27 | 49212 | PLATE, SLOTTED - D CAB | 1 |
| 28 | 59139 | SCREW, MACHINE - #10-24 X .5” (BUTTON) | 6 |
| 29 | 23264 | BOLT - .25” X .5” **S/N: UP TO 1270** | 1 |
| 29 | 69074 | BOLT, HHCS, .38-24 X 0.75 GR5 **S/N: 1270 & FORWARD** | 1 |
| 30 | 59120 | BOLT, FLAT HEAD .25-20NC X 1.50LG GR.5 | 4 |
| 31 | 16131 | NUT, NYLOCK - #10-24 | 4 |
| 32 | 15589 | BOLT - .3125” X 1” | 1 |
| 33 | 15591 | BOLT - .3125” X 1.5” | 1 |
| 34 | 10812 | NUT, LOCK - .3125” | 2 |
| 35 | 59099 | BALL JOINT ROD END INSERT, 5/16 ID | 2 |
| 36 | 15576 | BOLT - .25” X 1” | 5 |
| 37 | 15604 | BOLT - .25” X .75” | 2 |
| 38 | 10811 | NUT, LOCK - .25” | 7 |
| 39 | 10813 | NUT, LOCK - .375” | 2 |
| 40 | 10801 | WASHER, FLAT - .3125” | 1 |

# K100-00030 - CABIN WINDOWS

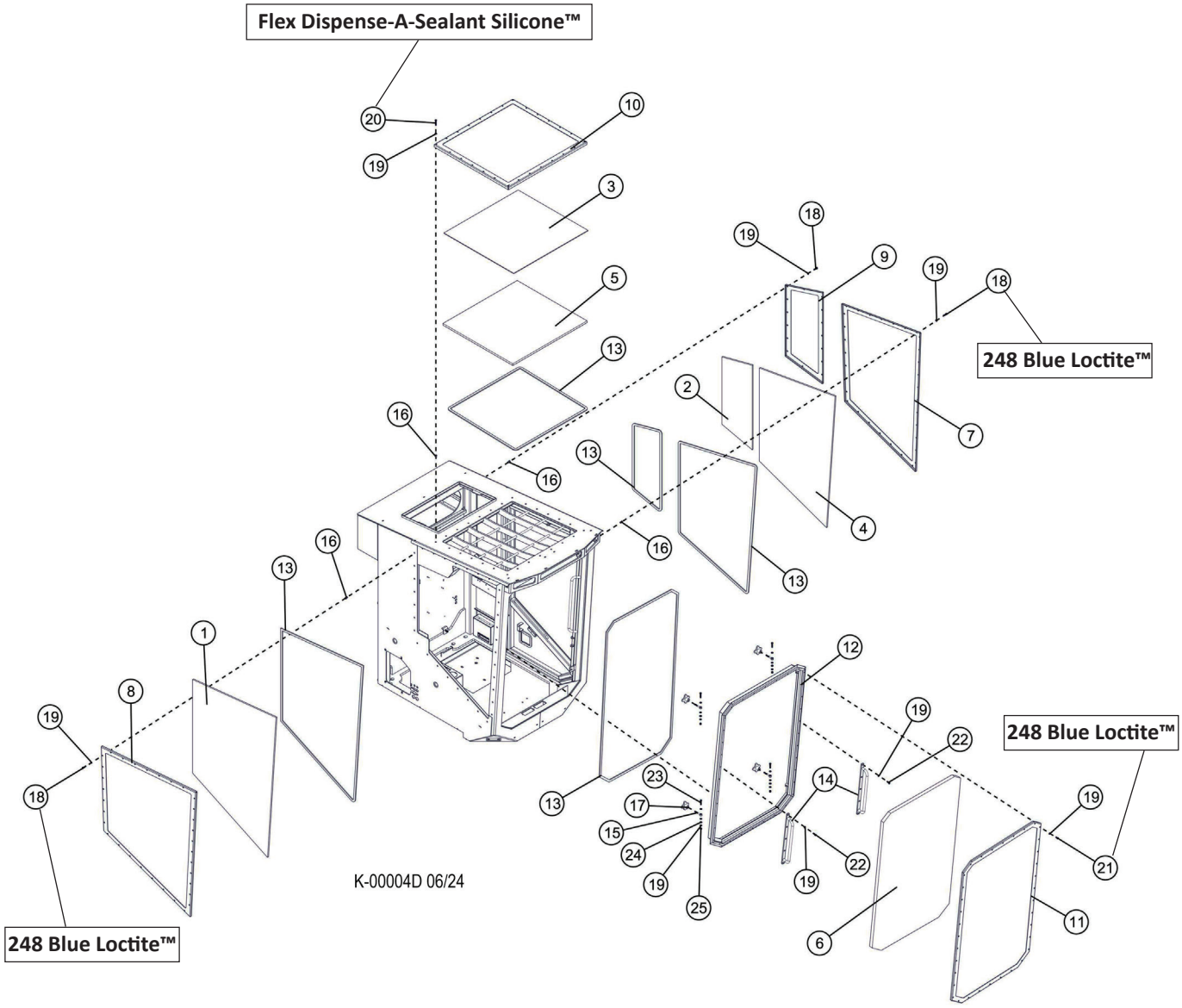

# K100-00030 - CABIN WINDOWS

| Item | Part # | Description | Qty. |
|---|---|---|---|
| 1 | 49339 | LEXON, BOOM SIDE D-SERIES | 1 |
| 2 | 49370 | LEXON, REAR CAB WINDOW .5 THK OPERA | 1 |
| 3 | 49532 | LEXAN, SKYLIGHT - 3/16” - D | 1 |
| 4 | 49215 | LEXON, DOOR - D SERIES | 1 |
| 5 | 49216 | LEXON, SKYLIGHT - 3/4” D-SERIES | 1 |
| 6 | 49347 | LEXON, FRONT WINDOW - 1.25” D-SERIES | 1 |
| 7 | 49214 | RETAINER, DOOR WINDOW FRAME | 1 |
| 8 | 49338 | RETAINER, BOOMSIDE WINDOW FRAME | 1 |
| 9 | 49371 | RETAINER, REAR WINDOW FRAME | 1 |
| 10 | 49217 | FRAME, SKYLIGHT WINDOW -D | 1 |
| 11 | 49359 | FRAME - FRONT WINDOW D-SERIES | 1 |
| 12 | 49366 | WELDMENT, HATCH FRONT WINDOW RETAINER D | 1 |
| 13 | 42378FT | WEATHERSTRIPPING, WINDOW 5/16 x 3/4 | A/R |
| 14 | 60701 | HANDLE, FRONT WINDOW - D-SERIES | 2 |
| 15 | 57489 | ROD, TIE - FRONT WINDOW FRAME | 4 |
| 16 | 49151 | INSERT, NUT 3/8”-16 2B MAXTITE - THICK | 106 |
| 17 | 49529 | KNOB, STAR - D CAB | 4 |
| 18 | 10731 | BOLT - .375” X 1.5” **248 BLUE LOCTITE™** | 80 |
| 19 | 15528 | WASHER, SAE FLAT - .375” | 154 |
| 20 | 15529 | BOLT - .375” X 2” **FLEXSEAL DISPENSE-A-SEALENT SILICONE™** | 26 |
| 21 | 15542 | BOLT - .375” X .75” **248 BLUE LOCTITE™** | 26 |
| 22 | 11707 | BOLT - .375” X 1” | 10 |
| 23 | 20084 | BOLT - .375” X 1.75” | 4 |
| 24 | 10813 | NUT, LOCK - .375 | 4 |
| 25 | 98627 | WASHER, THICK - .375 | 4 |

# K100-00040 - CABIN INSULATION

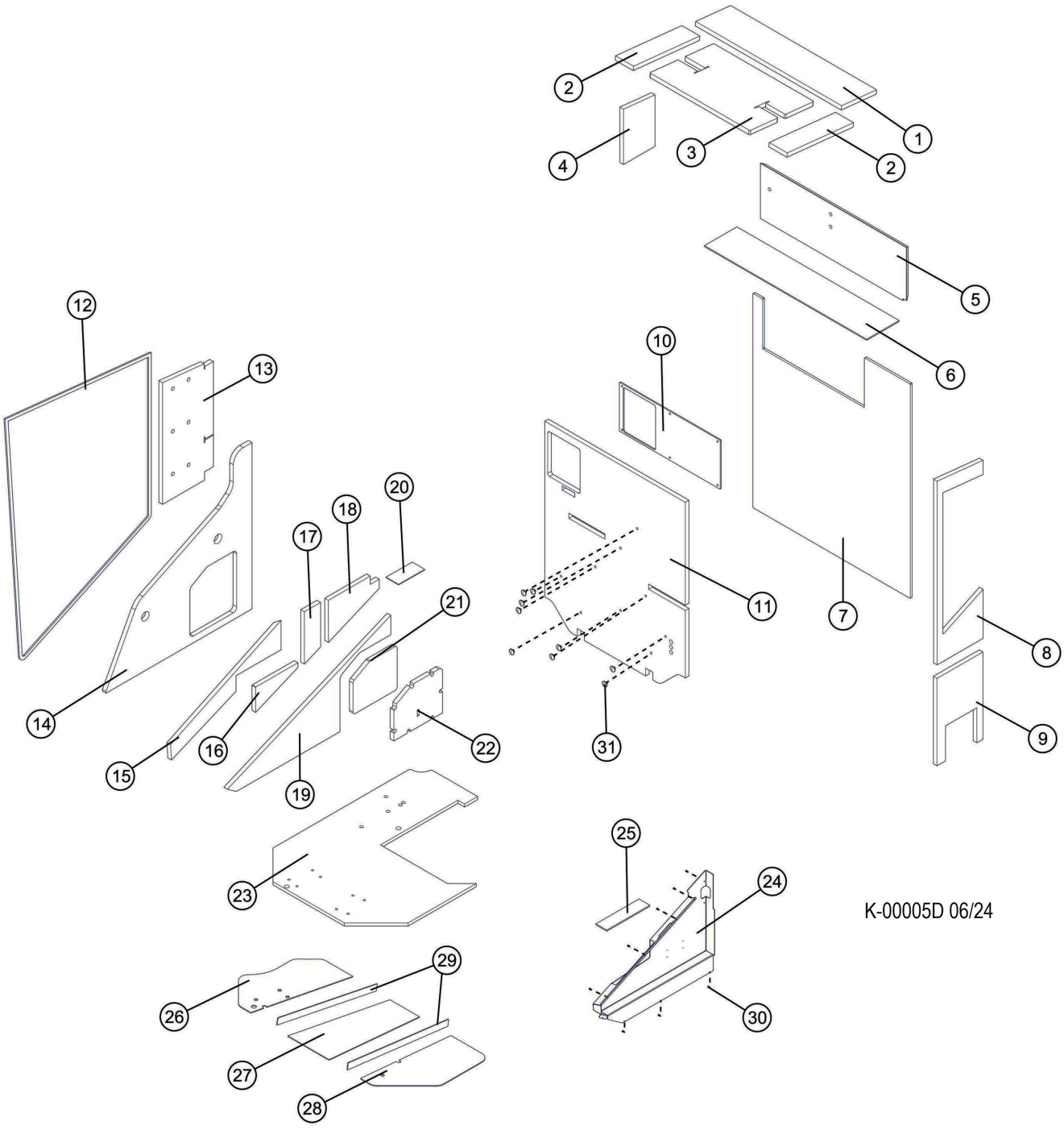

# K100-00040 - CABIN INSULATION

| Item | Part # | Description | Qty. |
|---|---|---|---|
| 1 | 49547 | FOAM, ACOUSTIC REAR COMPT CEILING - D | 1 |
| 2 | 49507 | FOAM, ACOUSTIC CEILING - D CAB | 2 |
| 3 | 49520 | FOAM, ACOUSTIC ESCAPE HATCH - D CAB | 1 |
| 4 | 49548 | FOAM, ACOUSTIC COMPT SIDE - D CAB | 1 |
| 5 | 49546 | FOAM, ACOUSTIC REAR COMPT REAR WALL - D | 1 |
| 6 | 47147 | MAT, RUBBER - C-CAB STORAGE TRAY | 1 |
| 7 | 46653 | INSULATION, CAB TO UPPER- C SERIES | 1 |
| 8 | 49506 | FOAM, ACOUSTIC OPERA WINDOW BOTTOM - D | 1 |
| 9 | 49545 | FOAM, ACOUSTIC REAR COMPT FLOOR - D CAB | 1 |
| 10 | 46684 | RUBBER, CAB TO ELECRICAL BOX - C MODEL | 1 |
| 11 | 49504 | FOAM, ACOUSTIC REAR WALL - D CAB | 1 |
| 12 | 42378 | WEATHERSTRIPPING, WINDOW 5/16x3/4x500’ | 1 |
| 13 | 49502 | FOAM, ACOUSTIC UPPER REAR RH - D CAB | 1 |
| 14 | 46651 | INSULATION, CAB TO BOOM | 1 |
| 15 | 49525 | FOAM, ACOUSTIC BOOM SIDE - D CAB | 1 |
| 16 | 49526 | FOAM, ACOUSTIC BOOM SIDE - D CAB | 1 |
| 17 | 49527 | FOAM, ACOUSTIC BOOM SIDE - D CAB | 1 |
| 18 | 49528 | FOAM, ACOUSTIC BOOM SIDE CONSOLE LOWER | 1 |
| 19 | 49522 | FOAM, ACOUSTIC BOOM SIDE LOWER - D CAB | 1 |
| 20 | 58013 | RUBBER, MAT - COIN TRAY D-SERIES CAB | 1 |
| 21 | 49522 | FOAM, ACOUSTIC BOOM SIDE LOWER - D CAB | 1 |
| 22 | 49524 | FOAM, ACOUSTIC BOOM SIDE HATCH - D CAB | 1 |
| 23 | 49550 | FLOORMAT, TRACK MACHINE “D” CAB | 1 |
| 24 | 49201 | SHROUD, DOOR - FORMED | 1 |
| 25 | 58012 | RUBBER, MAT - CAB DOOR POCKET | 1 |
| 26 | 58044 | DEADENING, SOUND CAB CAVITY | 1 |
| 27 | 58043 | DEADENING, SOUND CAB CAVITY | 1 |
| 28 | 58041 | DEADENING, SOUND CAB CAVITY | 1 |
| 29 | 58040 | DEADENING, SOUND CAB CAVITY | 2 |
| 30 | 22862 | SCREW, MACHINE - #10-24 X .5” (BUTTON) | 8 |
| 31 | 49503 | BUTTON, PUSH ON RETAINER - GRAY #10 STUD | 9 |

# K100-00050 - FLOORMAT - FB/TH

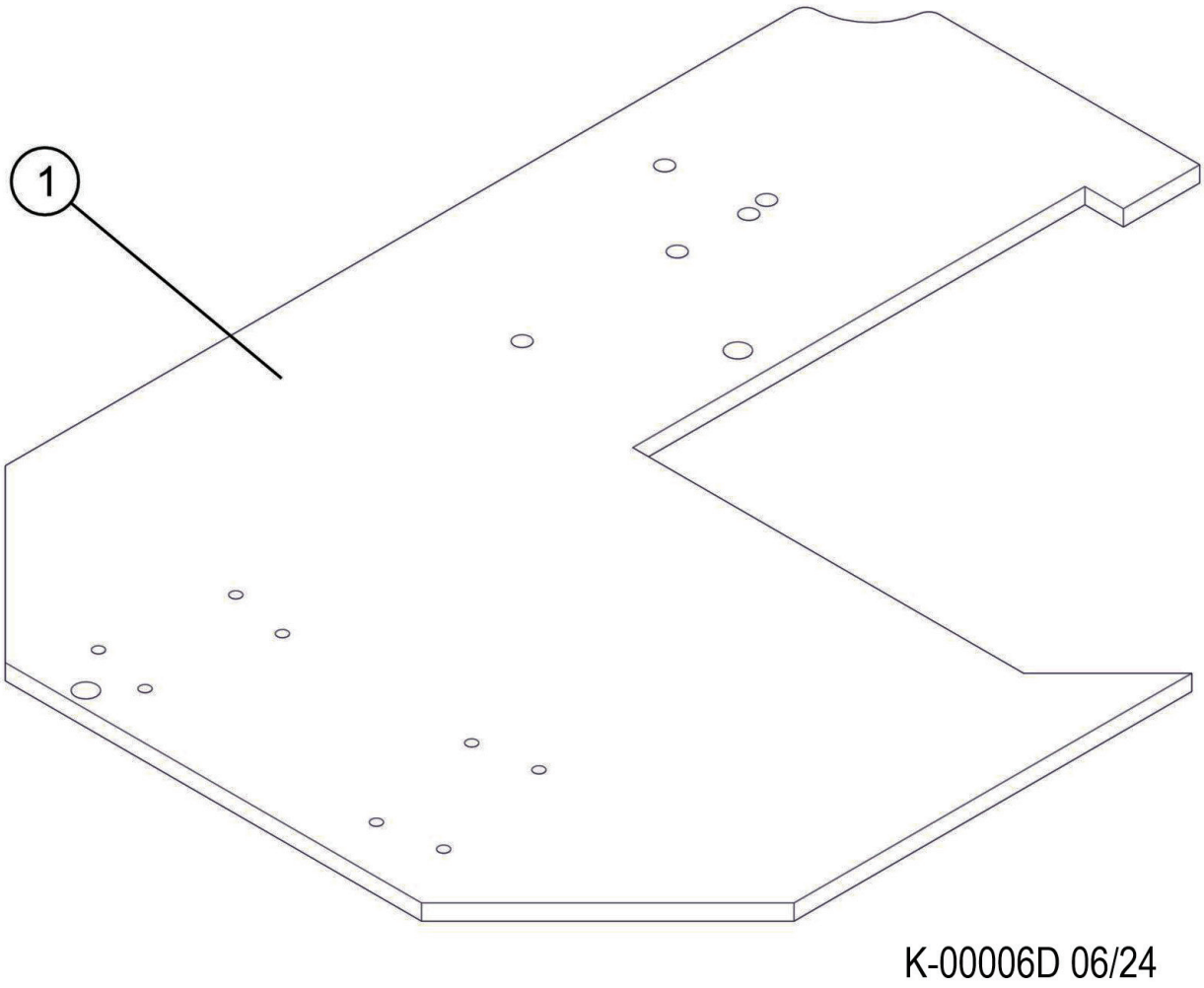


| Item | Part # | Description | Qty. |
|---|---|---|---|
| 1 | 49550 | CABFLOOR MAT, TRACK MACHINE | 1 |

# K100-00060 - CABIN TRIM

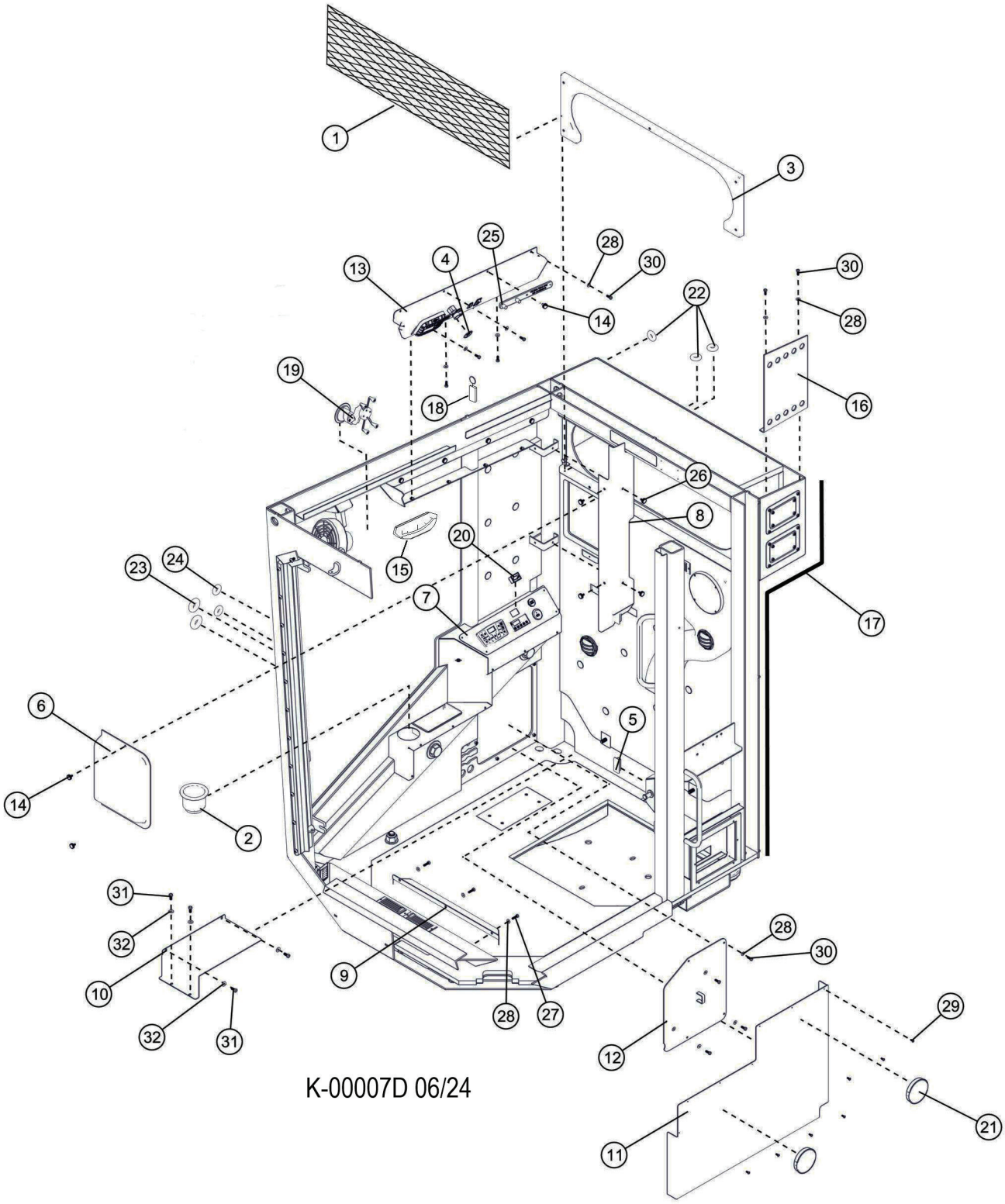


K-00007D 06/24

# K100-00060 - CABIN TRIM

| Item | Part # | Description | Qty. |
|---|---|---|---|
| 1 | 57388 | NET, CARGO STRETCH - C SERIES CAB | 1 |
| 2 | 54997 | HOLDER, CUP - 735/830-C | 1 |
| 3 | 49544 | TRIM, REAR COMPARTMENT D-SERIES CAB | 1 |
| 4 | 53243 | RING, EMERGENCY STOP | 1 |
| 5 | 49500 | PLUG RECTANGLER TUBE - PLASTIC CAB | 1 |
| 6 | 1048246 | COVER, PLASTIC FUSE PANEL - D SERIES | 1 |
| 7 | 47914 | PLATE, DASH - D SERIES | 1 |
| 8 | 49538 | CONSLE, BOOMSIDE - MIDDLE/VERT - D CAB | 1 |
| 9 | 61002 | PLATE, PEDAL WIRE - D CAB | 1 |
| 10 | 60476 | PLATE, COVER | 1 |
| 11 | 49111 | COVER, SIDE CONSOLE | 1 |
| 12 | 49497 | COVER, LOWER RB - D CAB | 1 |
| 13 | 49540 | PANEL, UPPER WELDMENT | 1 |
| 14 | 55032 | KNOB, THUMB SCREW-1/4-20 | 3 |
| 15 | 24198 | INDICATOR, SLOPE | 1 |
| 16 | 49385 | GUARD, LIGHTS - REAR TOP | 1 |
| 17 | 54050 | WEATHERSTRIPPING, RUBBER DOOR SEAL | 6 |
| 18 | 57563 | KEYCHAIN | 1 |
| 19 | 57551 | CELL PHONE MOUNT | 1 |
| 20 | 52401 | HOUR METER | 1 |
| 21 | 57816 | CAB MOUNTING PLASTIC COVER | 2 |
| 22 | 58386 | GROMMET | 3 |
| 23 | 42514 | GROMMET, .875 I.D. | 2 |
| 24 | 58387 | GROMMET | 2 |
| 25 | 52777 | WRENCH, STAR KNOB | 1 |
| 26 | 59097 | BUTTON RETAINER, TRIM PANEL | 4 |
| 27 | 23264 | BOLT - .25” X .5” | 3 |
| 28 | 10757 | WASHER, SAE FLAT - .25” | 15 |
| 29 | 22862 | SCREW, MACHINE - #10-24 X .5” (BUTTON) | 7 |
| 30 | 15604 | BOLT - .25” X .75” | 12 |
| 31 | 15605 | BOLT - .3125” X .75” | 4 |
| 32 | 15559 | WASHER, SAE FLAT - .3125” | 4 |

# K100-00065 - CABIN WELDMENT

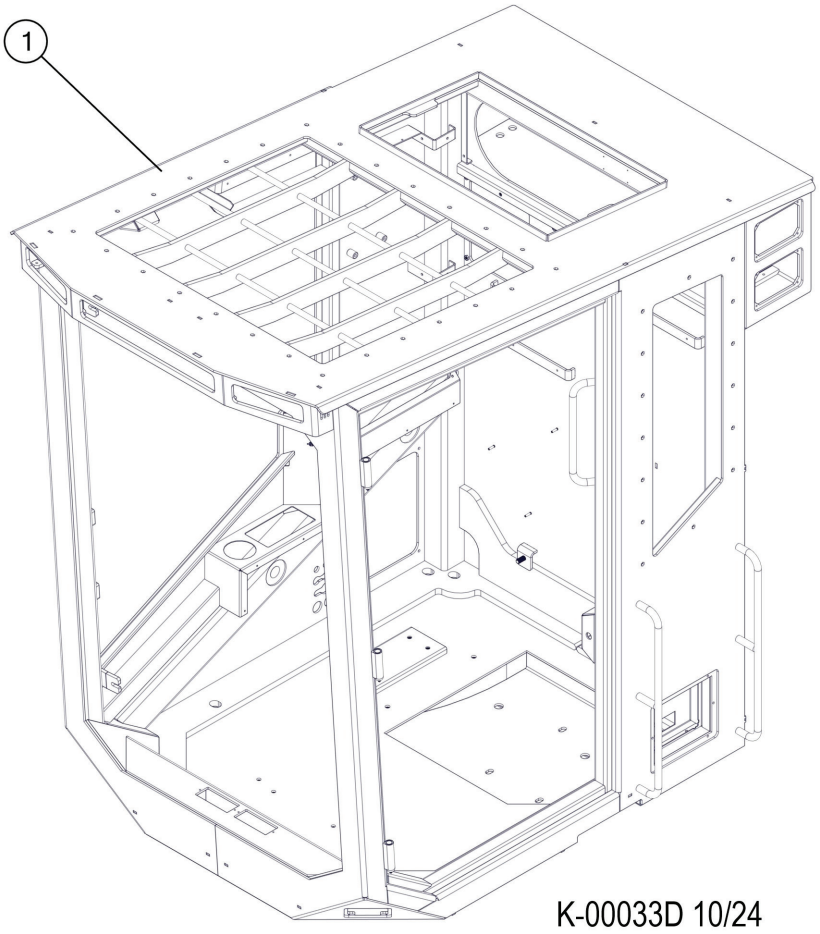


| Item | Part # | Description | Qty. |
|---|---|---|---|
| 1 | 49146 | CAB ASSEMBLY D-SERIES | 1 |

# K100-00070 - CABIN MOUNTING

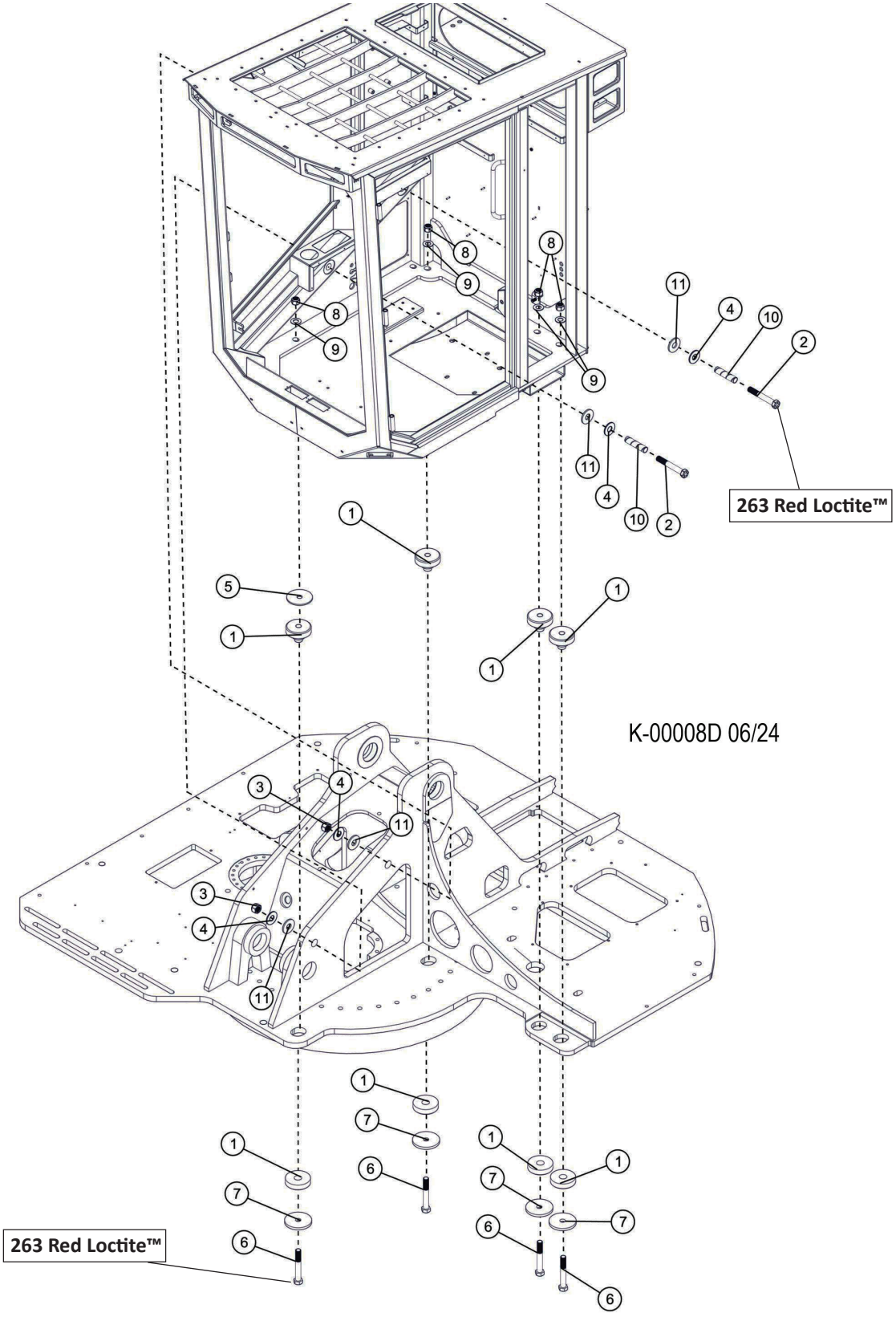

# K100-00070 - CABIN MOUNTING

| Item | Part # | Description | Qty. |
|---|---|---|---|
| 1 | 18141 | ISOLATOR, RUBBER - CAB | 4 |
| 2 | 53856 | BOLT - 1.125-12 X 7.5” (FINE THREAD) **263 RED LOCTITE™** | 2 |
| 3 | 53857 | NUT, LOCK - 1.125” (FINE THREAD) | 2 |
| 4 | 51320 | WASHER, SAE FLAT - 1.125” | 4 |
| 5 | 54773 | SHIM, CAB MOUNT - 1/4 INCH THICKNESS | 1 |
| 6 | 52240 | BOLT - 1” X 7” **263 RED LOCTITE™** | 4 |
| 7 | 19369 | WASHER, CAB MOUNTING ISOLATOR (1/2”) | 4 |
| 8 | 18253 | NUT, LOCK - 1” | 4 |
| 9 | 15579 | WASHER, SAE FLAT - 1” | 4 |
| 10 | 20843 | PROTECTOR, HOSE - SPRIAL (.78”)(BULK) | 2 |
| 11 | 17065 | WASHER, URETHANE - CAB BOLT | 4 |

# K100-00080 - CABIN ENTRY STEP

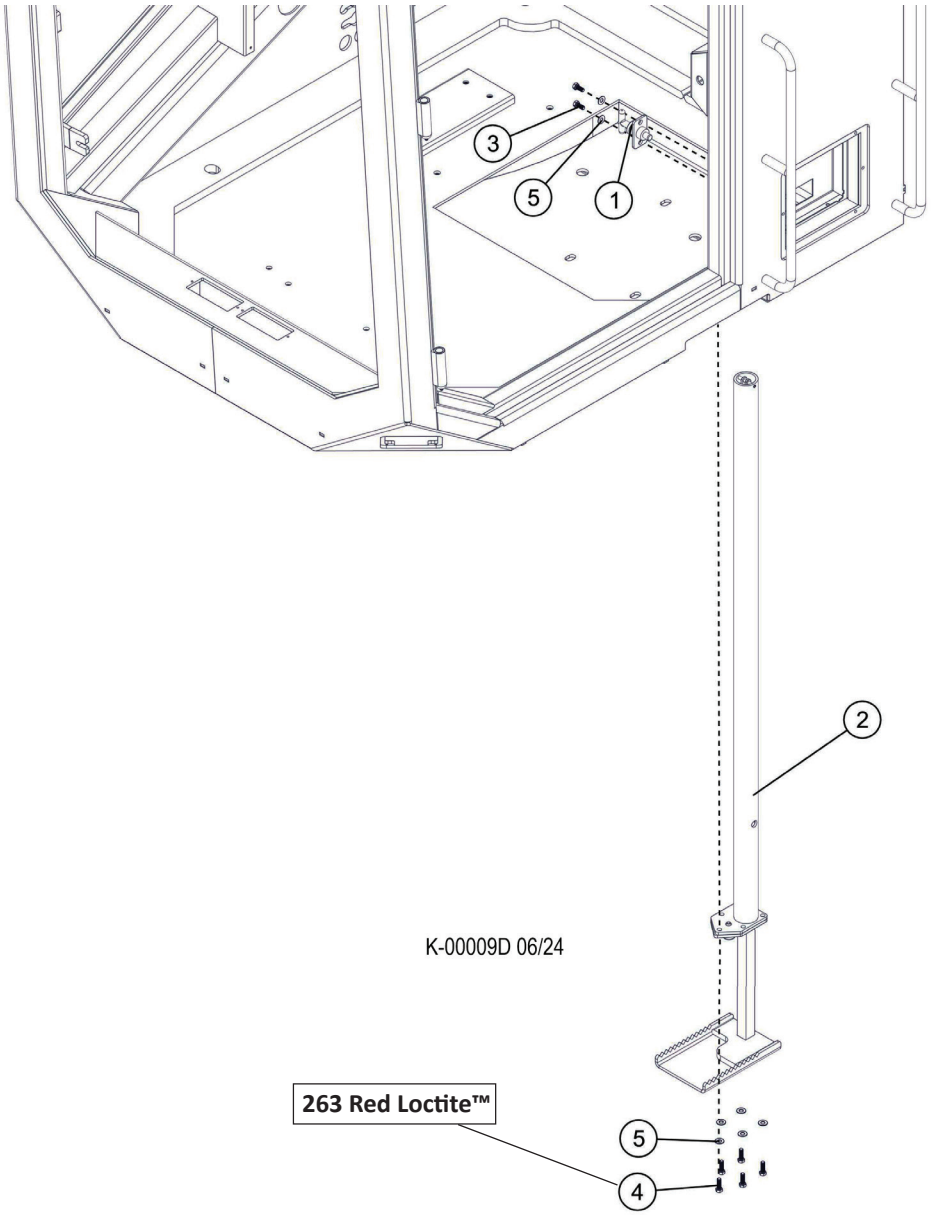


| Item | Part # | Description | Qty. |
|---|---|---|---|
| 1 | 54117 | LATCH, STEP | 1 |
| 2 | 47486-B | STEP, CAB | 1 |
| 3 | 15605 | BOLT - .3125” X .75” | 2 |
| 4 | 15589 | BOLT - .3125” X 1” **263 RED LOCTITE™** | 5 |
| 5 | 15559 | WASHER, SAE FLAT - .3125” | 7 |

# K100-00085 - CABIN NO STEP

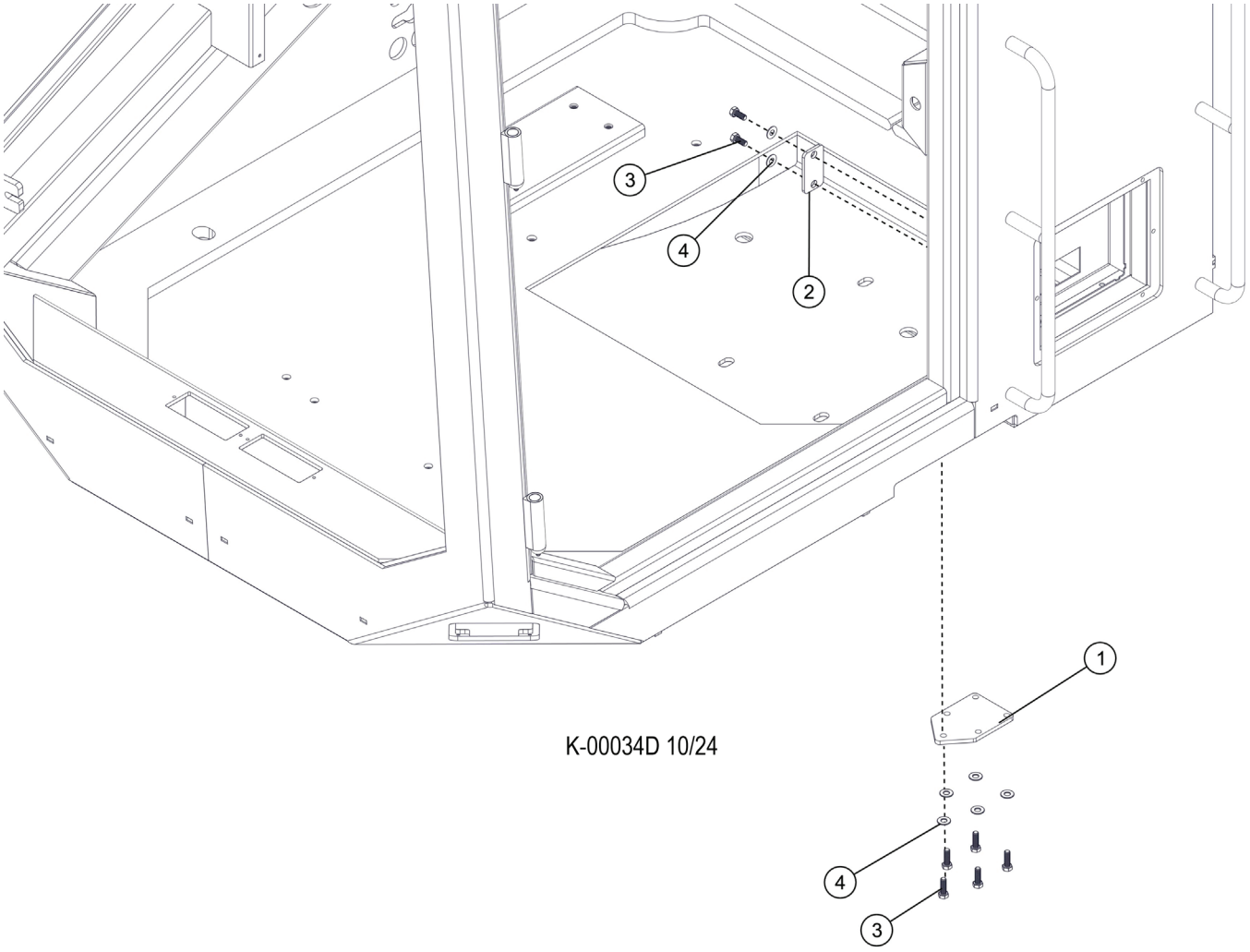


| Item | Part # | Description | Qty. |
|---|---|---|---|
| 1 | 60526 | PLATE, STEP - BLOCK OFF | 1 |
| 2 | 54117-BLANK | PLATE, LATCH BLOCK OFF | 1 |
| 3 | 15605 | BOLT - .3125” X .75” | 7 |
| 4 | 15559 | WASHER, SAE FLAT - .3125” | 7 |

# K100-00090 - JOYSTICKS - TRACK STD

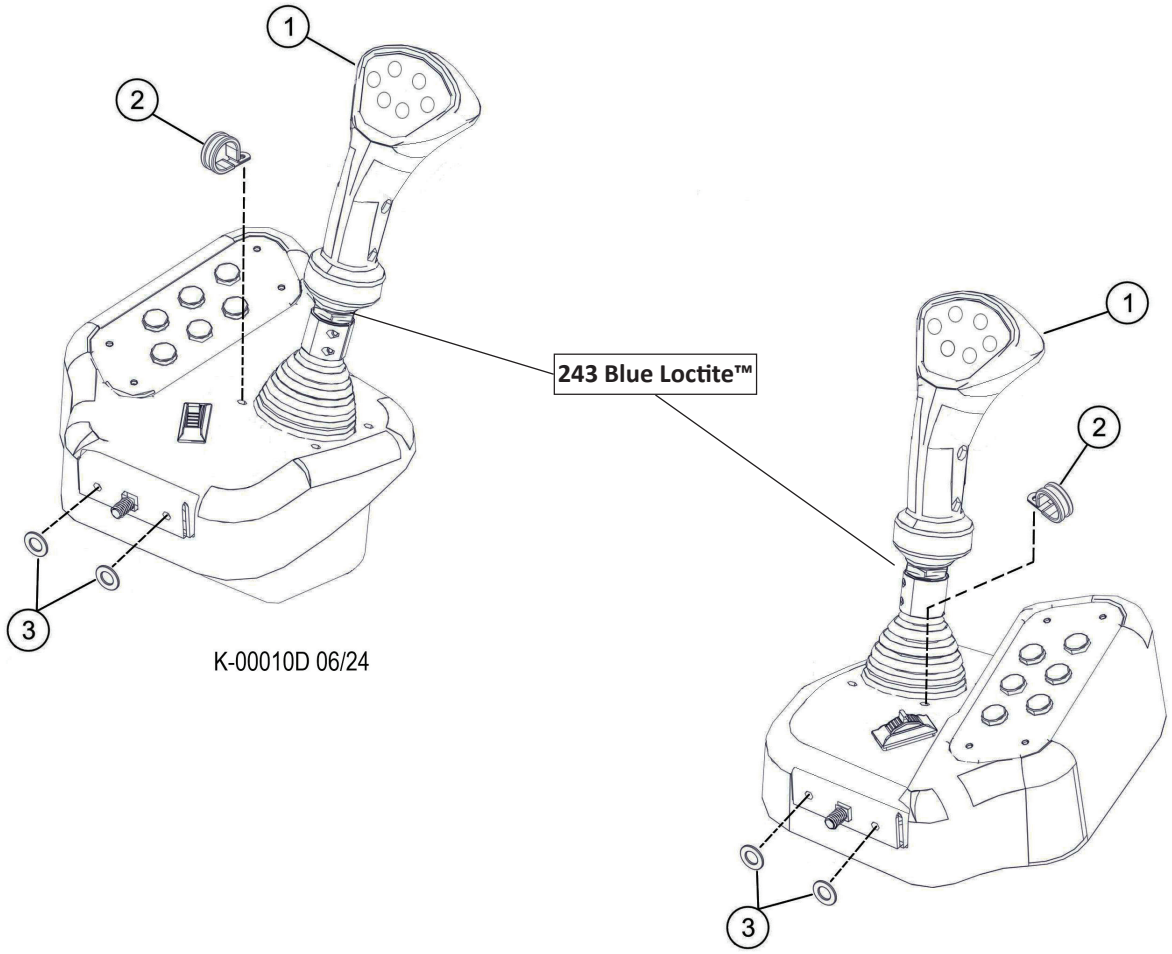


| Item | Part # | Description | Qty. |
|---|---|---|---|
| 1 | 55655 | HAND CONTROL, UPPER - SURE GRIP | 2 |
| 2 | 58227 | CLAMP, CUSHION LOOP 1/4 INCH | 2 |
| 3 | 10718 | WASHER, SAE FLAT - .875” | 4 |

# K100-00100 - JOYSTICKS - PROCESSOR

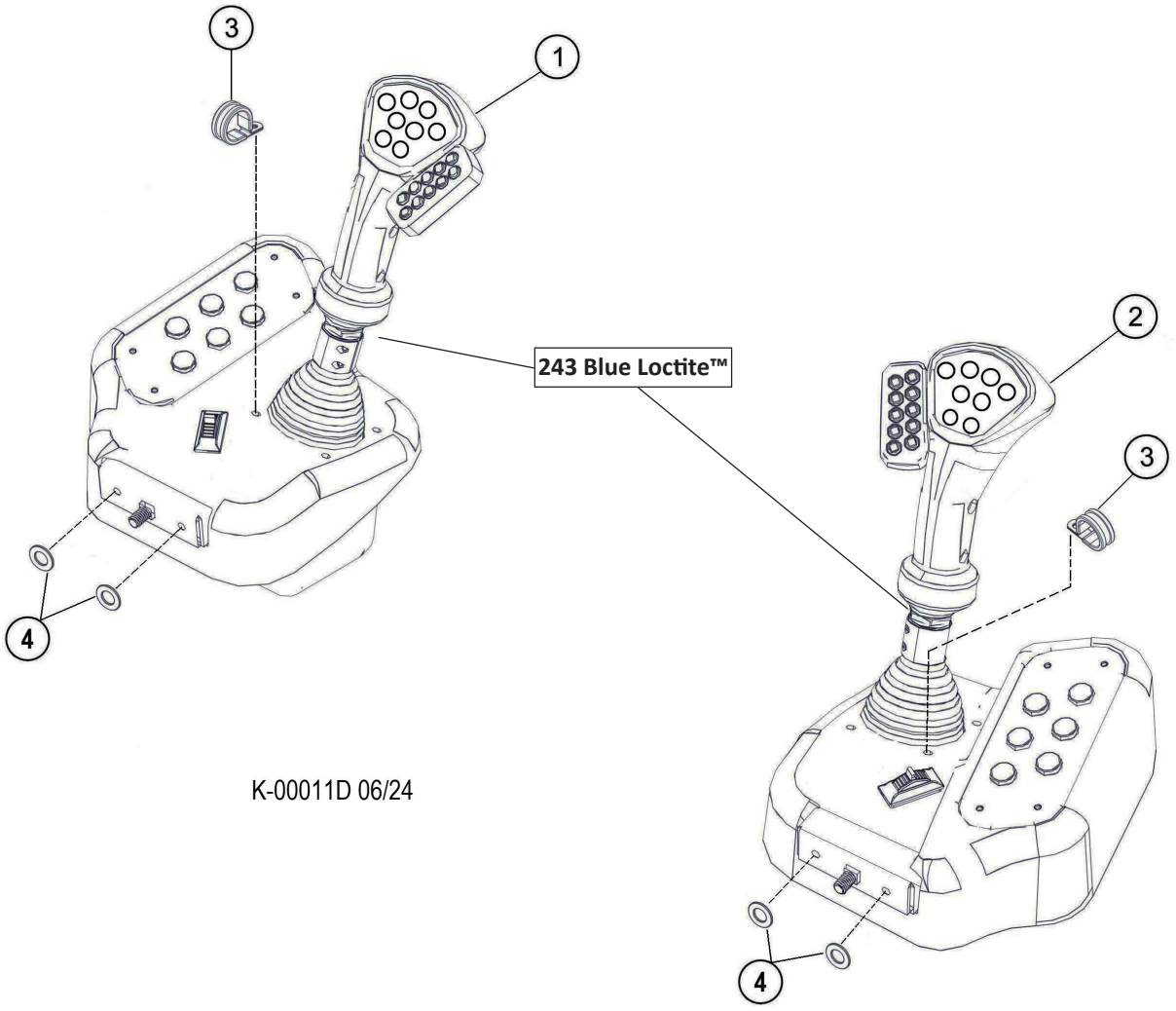


K-00011D 06/24

| Item | Part # | Description | Qty. |
|---|---|---|---|
| 1 | 51929 | HAND CONTROL, SURE GRIP - W/LH KEYPAD | 1 |
| 2 | 51566 | HAND CONTROL, SG PROCESSOR - RH w/keypa | 1 |
| 3 | 58227 | CLAMP, CUSHION LOOP 1/4 INCH | 2 |
| 4 | 10718 | WASHER, SAE FLAT - .875” | 4 |

# K100-105 - JOYSTICKS - HARNESS

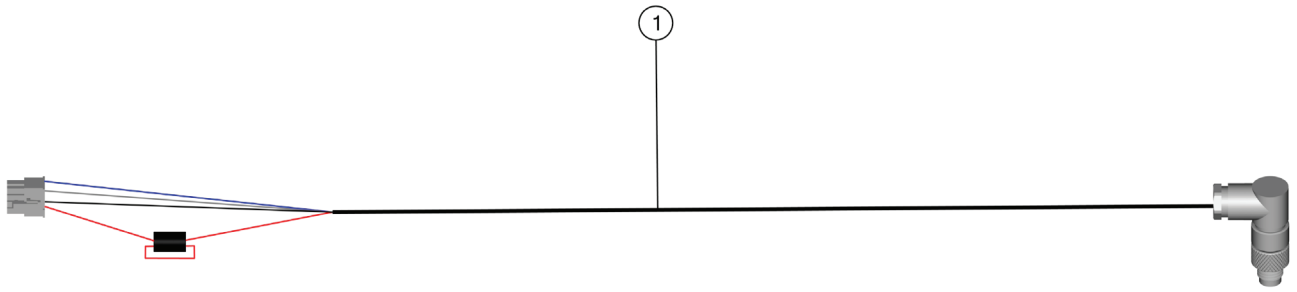


| Item | Part # | Description | Qty. |
|---|---|---|---|
| 1 | 55419 | HARNESS, INTERCONNECT JOYSTICK POD LH, **S/N: UP TO 1237** | 1 |
| 1 | 692870 | LEFT JOYSTICK POD INTERCONNECT HARNESS, **S/N: 1238 & FORWARD** | 1 |

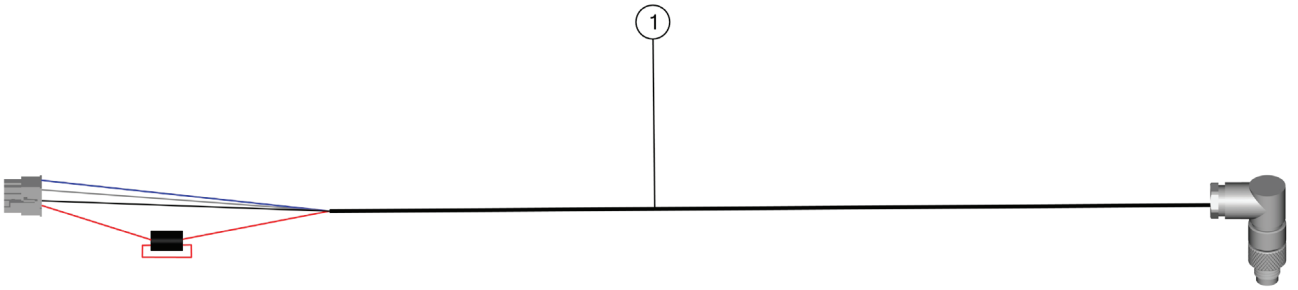


| Item | Part # | Description | Qty. |
|---|---|---|---|
| 1 | 55420 | HARNESS, INTERCONNECT JOYSTICK POD RH, **S/N: UP TO 1237** | 1 |
| 1 | 692880 | RIGHT JOYSTICK POD INTERCONNECT HARNESS, , **S/N: 1238 & FORWARD** | 1 |

# K100-00110 - CABIN ELECTRICAL COMPONENTS

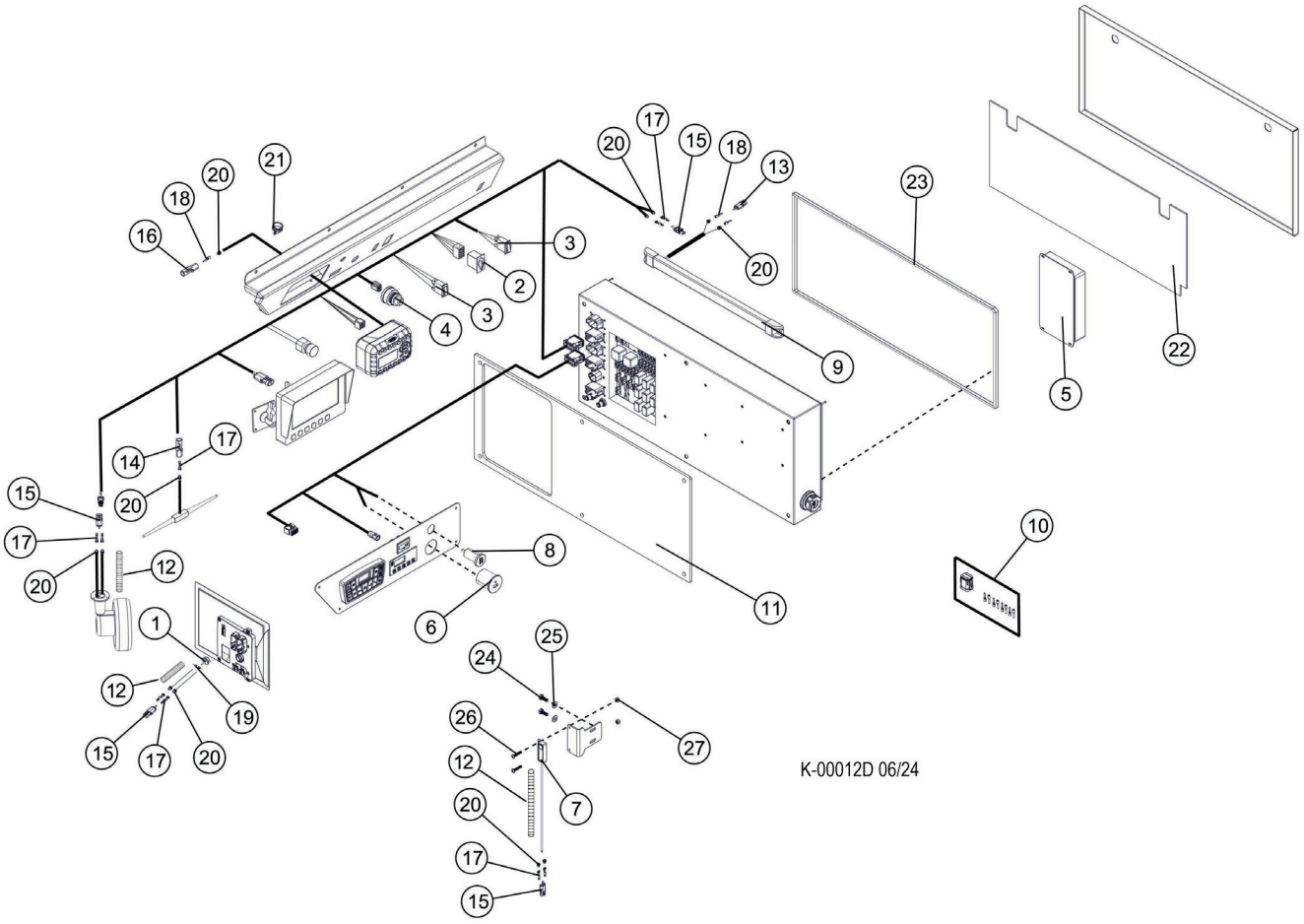

# K100-00110 - CABIN ELECTRICAL COMPONENTS

| Item | Part # | Description | Qty. |
|---|---|---|---|
| 1 | 53115 | SIREN, WARNING - B,C,D SERIES DASH | 1 |
| 2 | 51673 | SWITCH, VENT/ VACUUM - OTTO (1 PER) | 1 |
| 3 | 51664 | SWITCH, LIGHT - OTTO (1 PER) | 2 |
| 4 | 52414 | SWITCH, IGNITION (INDAK) | 1 |
| 5 | 55483 | CONVERTER, 24V TO 12V - “C AND D” SERIES | 1 |
| 6 | 55401 | ADAPTER, PANEL MOUNT USB - C SERIES | 1 |
| 7 | 55264 | SWITCH, LIMIT - GULLWING (MAGNETIC) | 1 |
| 8 | 55662 | POWER, POINT - AUX - C SERIES | 1 |
| 9 | 58983 | LIGHT, DOME - 12V REPLACES PN 23614 | 1 |
| 10 | 53260 | DEUTSCH 8 CONTACT SOCKET KIT | 1 |
| 11 | 46684 | RUBBER, CAB TO ELECRICAL BOX - C MODEL | 1 |
| 12 | 16705 | LOOM, SPLIT - .25” GREEN (BULK) | 3 |
| 13 | 23134 | 2 POSITION FEMALE SEALED CONNECTOR (WP) | 1 |
| 14 | 22224 | 1 POSITION MALE SEALED CONNECTOR (WP) | 1 |
| 15 | 22223 | 2 POSITION MALE SEALED CONNECTOR (WP) | 4 |
| 16 | 23133 | 1 POSITION FEMALE SEALED CONNECTOR (WP) | 1 |
| 17 | 22226 | TERMINAL, MALE (WEATHER PACK) | 9 |
| 18 | 23135 | TERMINAL, FEMALE (WEATHER PACK) | 3 |
| 19 | 15017 | DIODE | 1 |
| 20 | 22225 | SEAL, WIRE END (WEATHER PACK) | 12 |
| 21 | 58393 | P-CLIP, 5/8 ID, CUSHIONED | 1 |
| 22 | 58042 | DEADENING SHEET, SOUND | 1 |
| 23 | 55012 | WEATHERSTRIPPING, RUBBER-DOOR SEAL THIN | 6 |
| 24 | 15604 | BOLT - .25” X .75” | 2 |
| 25 | 10757 | WASHER, SAE FLAT - .25” | 2 |
| 26 | 59096 | SCREW, 10-24X1.0 PAN HD | 2 |
| 27 | 16131 | NUT, NYLOCK - #10-24 | 2 |
| - | 688060 | SIREN ASSY, DASH WARNING - (ITEMS - 1, 12, 15, 17, 19, 20) | 1 |

# K100-00120 - CABIN WIRE HARNESS

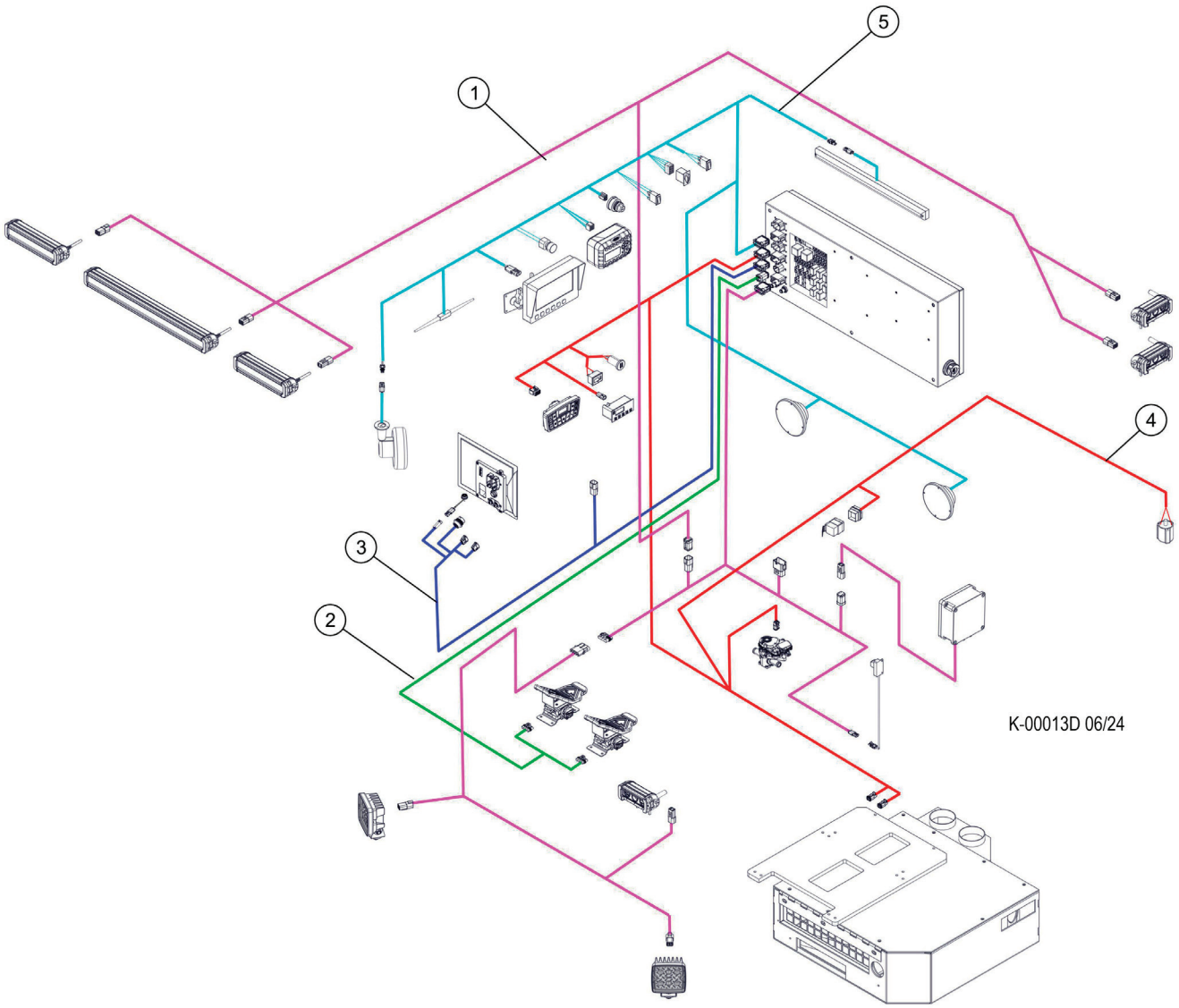


| Item | Part # | Description | Qty. |
|---|---|---|---|
| 1 | 57736 | HARNESS, CAB - Lower-Lights (D-Series) | 1 |
| 2 | 57758 | HARNESS, MD4 - Track Foot Pedals 700D | 1 |
| 3 | 55392 | HARNESS, MD4 Harness - C Series | 1 |
| 4 | 59039 | HARNESS, CAB - Heat A/C NEW Contr (D-Ser | 1 |
| 5 | 57737 | HARNESS, CAB - Upper DASH (D-Series) | 1 |

# K100-00130 - CABIN CONTROLS - TRACK

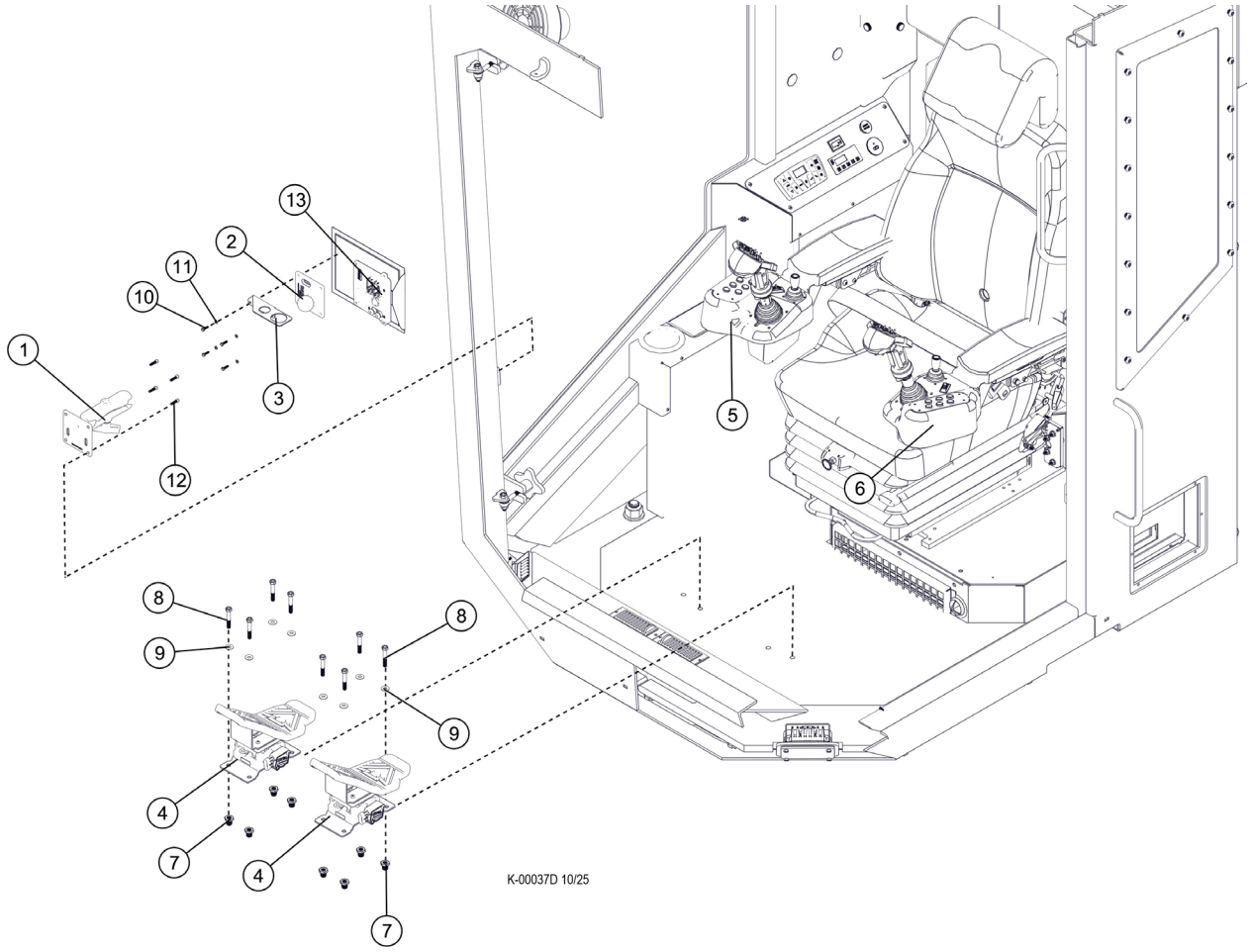


| Item | Part # | Description | Qty. |
|---|---|---|---|
| | 57866 | KIT, IQAN TRACK/WHL - D SERIES (MD4 - 10 | 1 |
| 1 | 57240 | MOUNT, RAM BALL - MD4 | 1 |
| 2 | 57531 | MOUNT, SCREEN - MD4-10 | 1 |
| 3 | 47502 | PLATE, BEEPER MOUNT: MD4-1O SCREEN | 1 |
| 4 | 57801 | PEDAL, FOOT CONTROL -D SERIES | 2 |
| 5 | 55422 | POD, JOYSTICK - RH (C&D RH TRACK) | 1 |
| 6 | 55417 | POD, JOYSTICK - LH (C&D SERIES WHEEL/TRA | 1 |
| 7 | 15574 | BUSHING, REDUCER - 5406-4-2 | 8 |
| 8 | 10823 | BOLT - .3125” X 2” | 8 |
| 9 | 15559 | WASHER, SAE FLAT - .3125” | 8 |
| 10 | 59094 | SCREW, M4-.07 X 16mm HEX HD Grade 8.8 | 4 |
| 11 | 16208 | WASHER, FLAT - #10 | 4 |
| 12 | 59095 | SCREW, 10-24X3/4 SOCKET HD | 4 |
| 13 | 57385 | MODULE, MD4 - 10" SCREEN LARGE | 1 |

# K100-00140 - CABIN HVAC

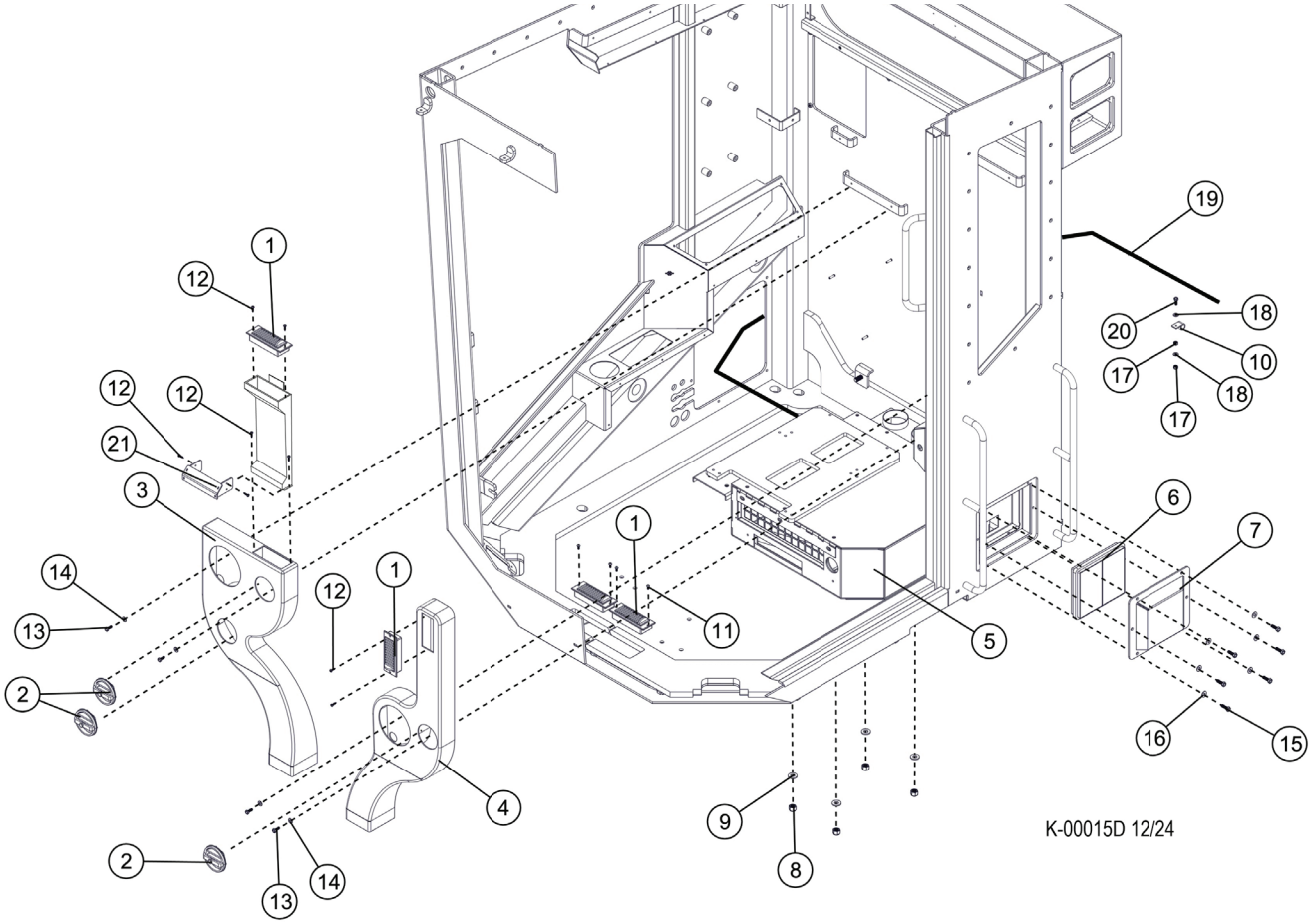


| Item | Part # | Description | Qty. |
|---|---|---|---|
| 1 | 51640 | VENT, LOUVER - CAB HEAT (TF830) | 4 |
| 2 | 57817 | VENT, LOUVER - C-SERIES CAB | 3 |
| 3 | 1048263 | DUCT, PLASTIC HEATER VENT - D SERIES (RH | 1 |
| 4 | 49494 | DUCT, PLASTIC HEATER VENT - D SERIESLH | 1 |
| 5 | 59033 | KIT, HEATER/AC - D - SERIES CAB (UPDATE | 1 |
| 6 | 54144 | FILTER, CAB - PRESSURIZED (CURRENT) | 1 |
| 7 | 61015 | COVER, AIR FILTER - D CAB | 1 |
| 8 | 15533 | 1/2” NUT, LOCK | 4 |
| 9 | 15534 | 1/2” WASHER | 4 |
| 10 | 59091 | P-CLIP, CUSHIONED, 1.0” | 1 |
| 11 | 22862 | SCREW, MACHINE - #10-24 X .5” (BUTTON) | 4 |
| 12 | 59085 | SCREW, 8X3/4 PAN HD (SELF TAP) | 10 |
| 13 | 15604 | BOLT - .25” X .75” | 4 |
| 14 | 10800 | WASHER, FLAT - .25” | 4 |
| 15 | 15589 | BOLT - .3125” X 1” | 6 |
| 16 | 15559 | WASHER, SAE FLAT - .3125” | 6 |
| 17 | 10811 | NUT, LOCK - .25” | 2 |
| 18 | 10757 | WASHER, SAE FLAT - .25” | 2 |
| 19 | 59114 | KIT, HEATER/AC HOSE | 1 |
| 20 | 15575 | BOLT - .25” X 1.5” | 1 |
| 21 | 673350 | WELDMENT, DUCT PROTECTOR | 1 |

# K100-00141 - CABIN HEATER / AIR CONDITIONING BOX COMPONENTS

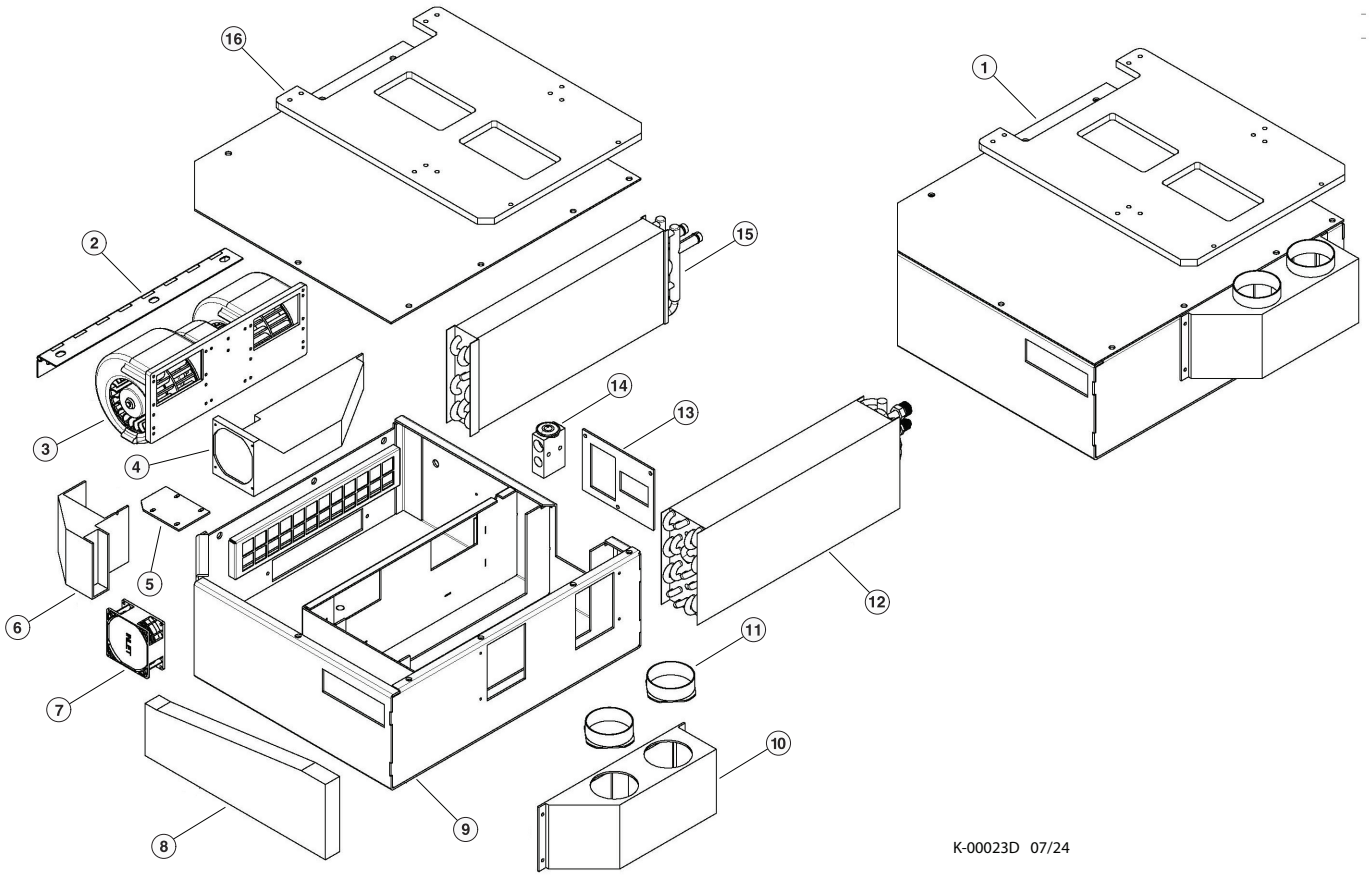


| Item | Part # | Description | Qty. |
|---|---|---|---|
| 1 | 59033 | HEARTER / AC UNIT | 1 |
| 2 | BA-916-053-28 | COVER HINGE | 1 |
| 3 | 55731 | BLOWER - 24V | 1 |
| 4 | BA6-1067 | INSIDE AIR DUCT | 1 |
| 5 | BA8-1067-3 | FAN HOUSING PLATE | 1 |
| 6 | BA8-1067-1 | DUCT, DEFROST FAN | 1 |
| 7 | BA3-5048 | FAN ASSEMBLY - 24V | 1 |
| 8 | BA8-1067-2 | TRANSFER DUCT - INSIDE | 1 |
| 9 | BA-916-053-36 | UNIT HOUSING | 1 |
| 10 | BA8-1051 | REAR OUTLET PLENUM | 1 |
| 11 | BT2-1024 | 3” HOSE ADAPTOR | 2 |
| 12 | BA6-1071-1 | EVAP. CORE | 1 |
| 13 | BA-916-053-32 | PLATE | 1 |
| 14 | R-71-8321 | EXP VALVE | 1 |
| 15 | BA6-1072-1 | HEATER COIL | 1 |
| 16 | BA-916-053-44 | UNIT COVER | 1 |

# K100-00142 - HEATER / AIR CONDITIONING CONTROLLER

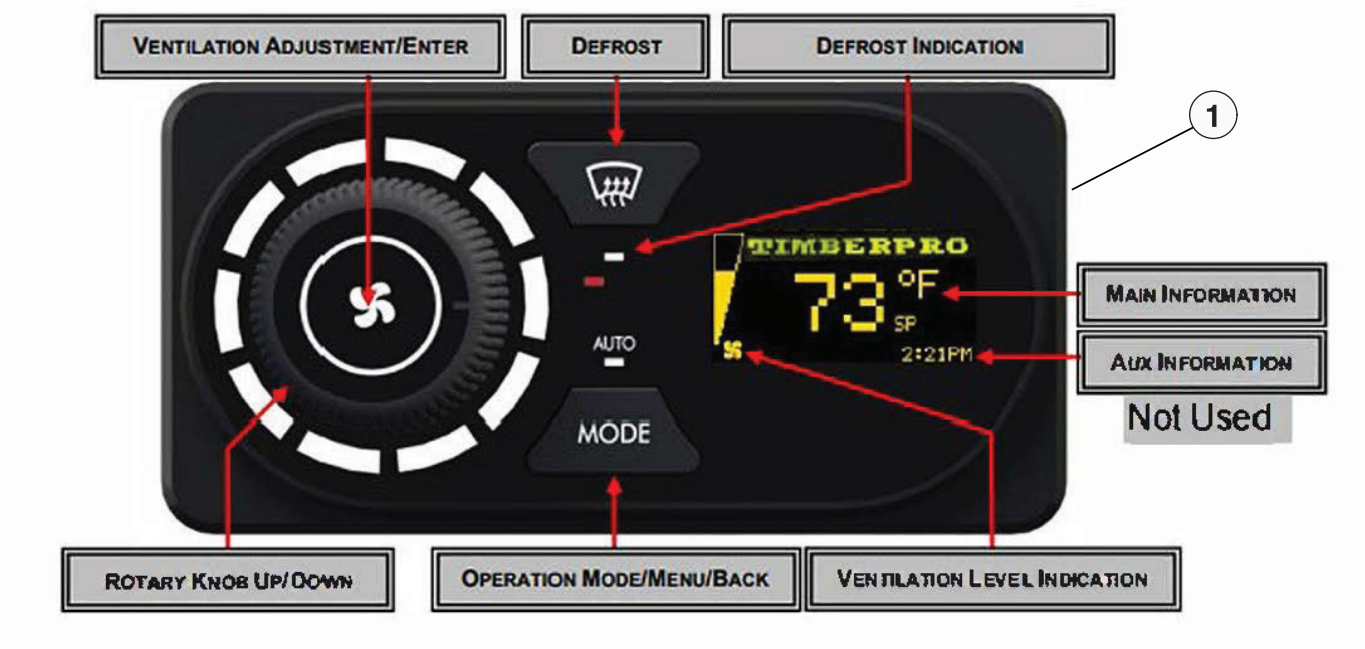


K-00024D 07/24

| Item | Part # | Description | Qty. |
|---|---|---|---|
| 1 | 55730 | CONTROLLER, NEO 2+ GLOBUS PROG | 1 |
| | | **NOTE:** CONTROLLER P/N 55730 REPLACES CONTROLLER P/N 58162. FOR OLDER MACHINES STILL USING THE 58162 CONTROLLER, ORDER P/N 55730 AND ALSO 59056 TO RETOFIT THESE MACHINES. | |

58162 - PANEL, TOUCH - HEATER/AC **(SHOWN FOR REFERENCE ONLY)**




K-00040D 12/25

## K100-00143 - HEATER / AIR CONDITIONING BINARY SWITCH

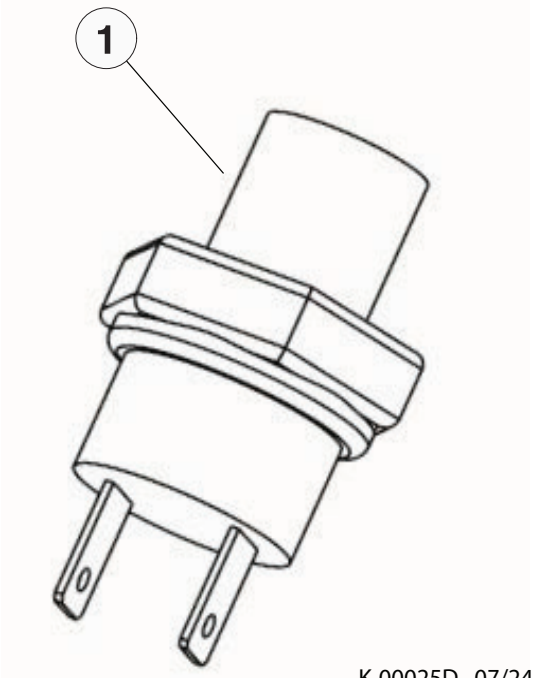


K-00025D 07/24

| Item | Part # | Description | Qty. |
|---|---|---|---|
| 1 | BT1-1423 | BINARY SWITCH | 1 |

## K100-00144 - HEATER / AIR CONDITIONING BINARY AIR TEMP SENSOR

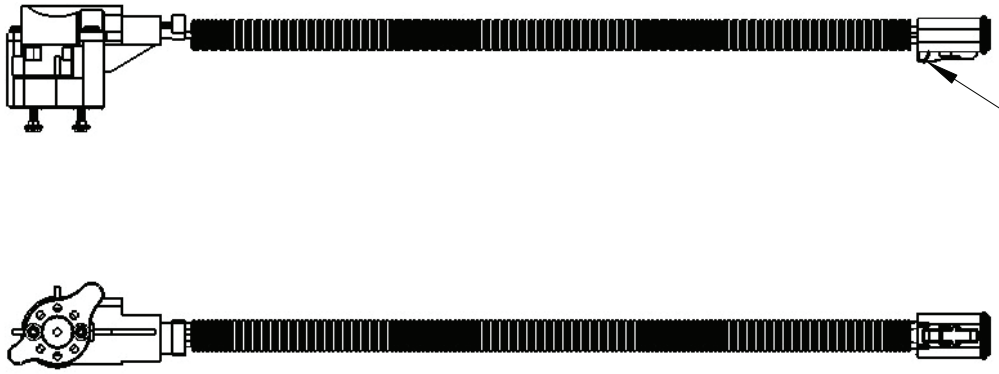


T6149 04/25

| Item | Part # | Description | Qty. |
|---|---|---|---|
| 1 | 55972 | SENSOR, TEMP W/ RESISTER/ADAPTOR | 1 |

## K100-00145 - CABIN HEATER WATER VALVE

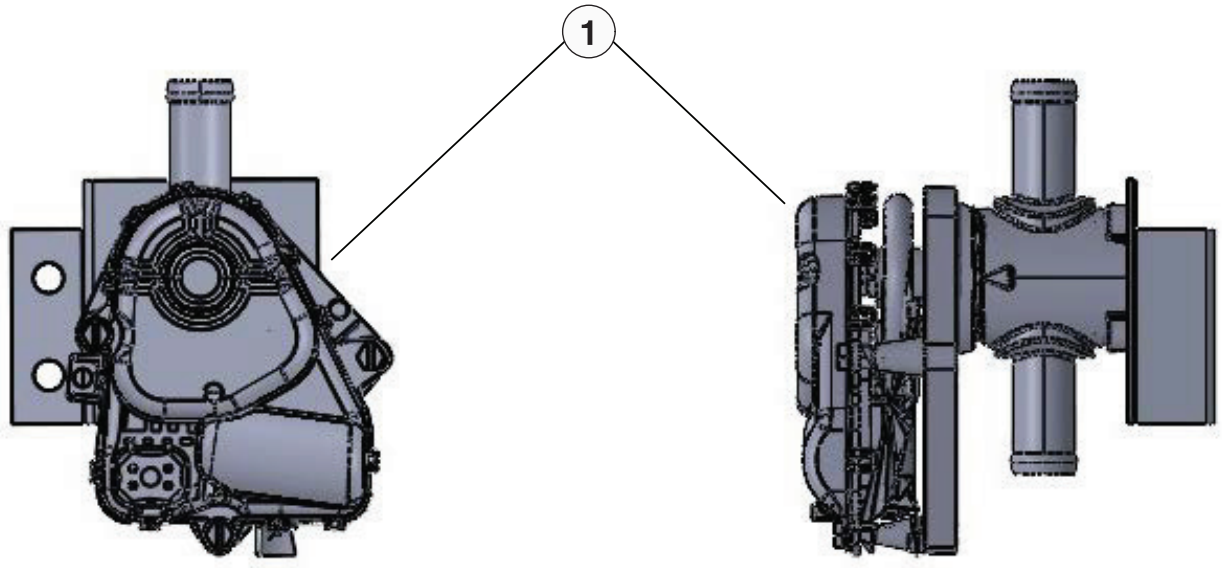


K-00027D 07/24

| Item | Part # | Description | Qty. |
|---|---|---|---|
| 1 | 58328 | VALVE, WATER - “D” SERIES CAB - BI-DIRECIONAL | 1 |

## K100-00146 - AIR CONDITIONING DRIER

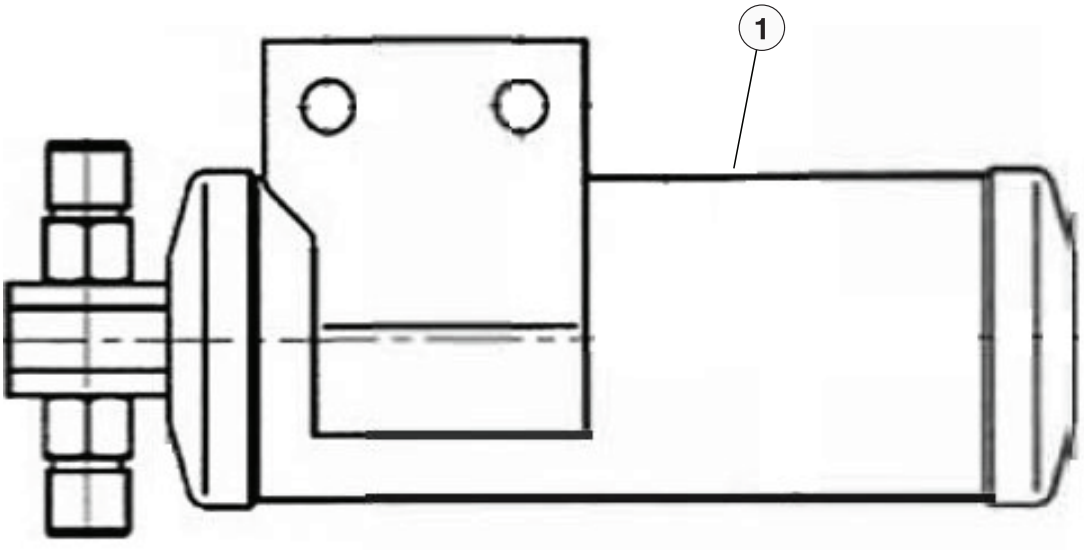


K-00029D 07/24

| Item | Part # | Description | Qty. |
|---|---|---|---|
| 1 | 50937 | DRIER, A/C - (EAGLE 24V SYSTEM) | 1 |

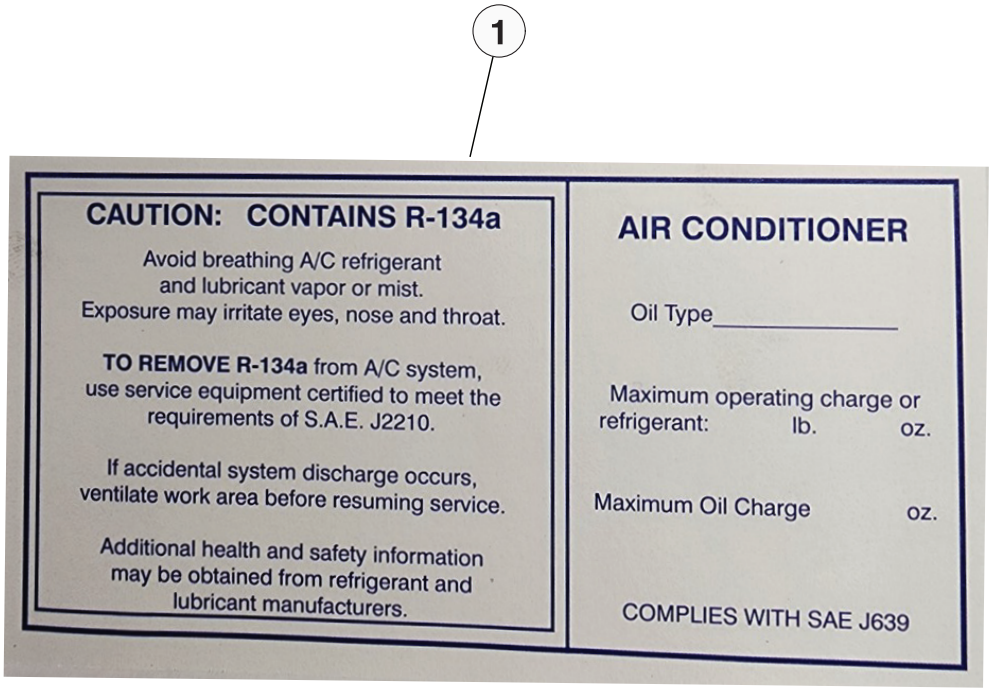


K-00030D 07/24

| Item | Part # | Description | Qty. |
|---|---|---|---|
| 1 | BT9-2004 | REFRIGERANT DECAL | 1 |

# K100-00148 - AIR CONDITIONING / HEATER HOSES

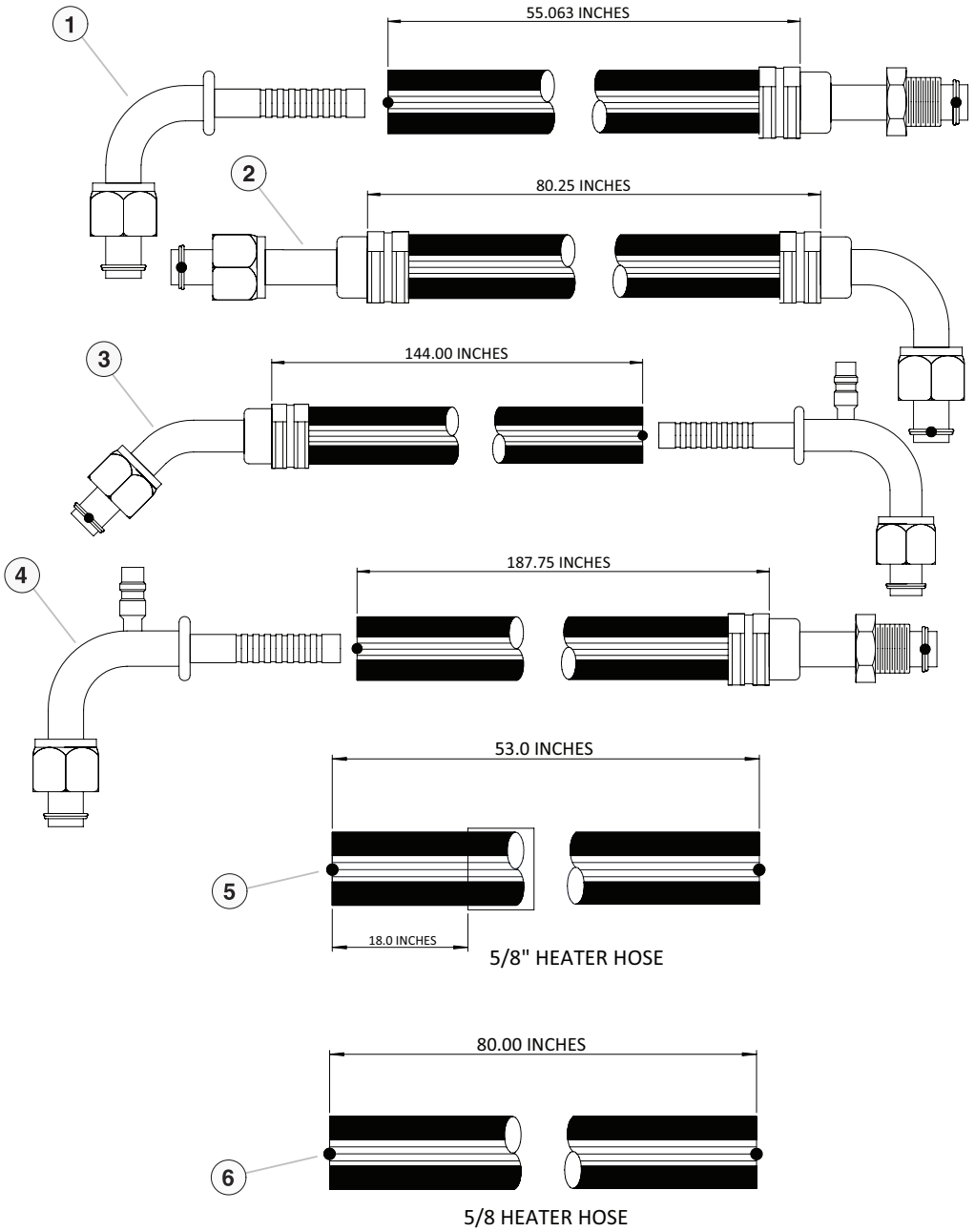


K-00031D 07/24

| Item | Part # | Description | Qty. |
|---|---|---|---|
| 1 | 681740 | HOSE - #6 DRIER TO EX VALVE | 1 |
| 2 | 681750 | HOSE - #6 COND. TO DRIER | 1 |
| 3 | 681760 | HOSE - #8 DISCHARGE | 1 |
| 4 | 681770 | HOSE - #16 SUCTION | 1 |
| 5 | 681780 | HOSE - HEATER 5/8” CUT TO 4’-5” | 1 |
| 6 | 681790 | HOSE - HEATER 5/8” CUT TO 6’-8” | 1 |

# K100-00149 - DEROST CABIN FAN

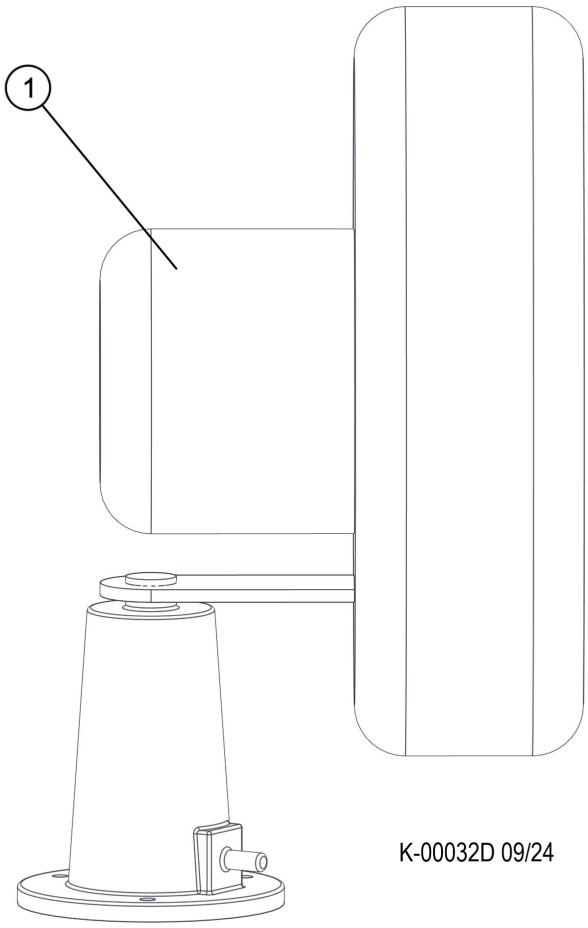


| Item | Part # | Description | Qty. |
|---|---|---|---|
| 1 | 23279 | FAN, WINDSHIELD DEFROST - 24V | 1 |

# K100-00150 - HVAC MOUNTING

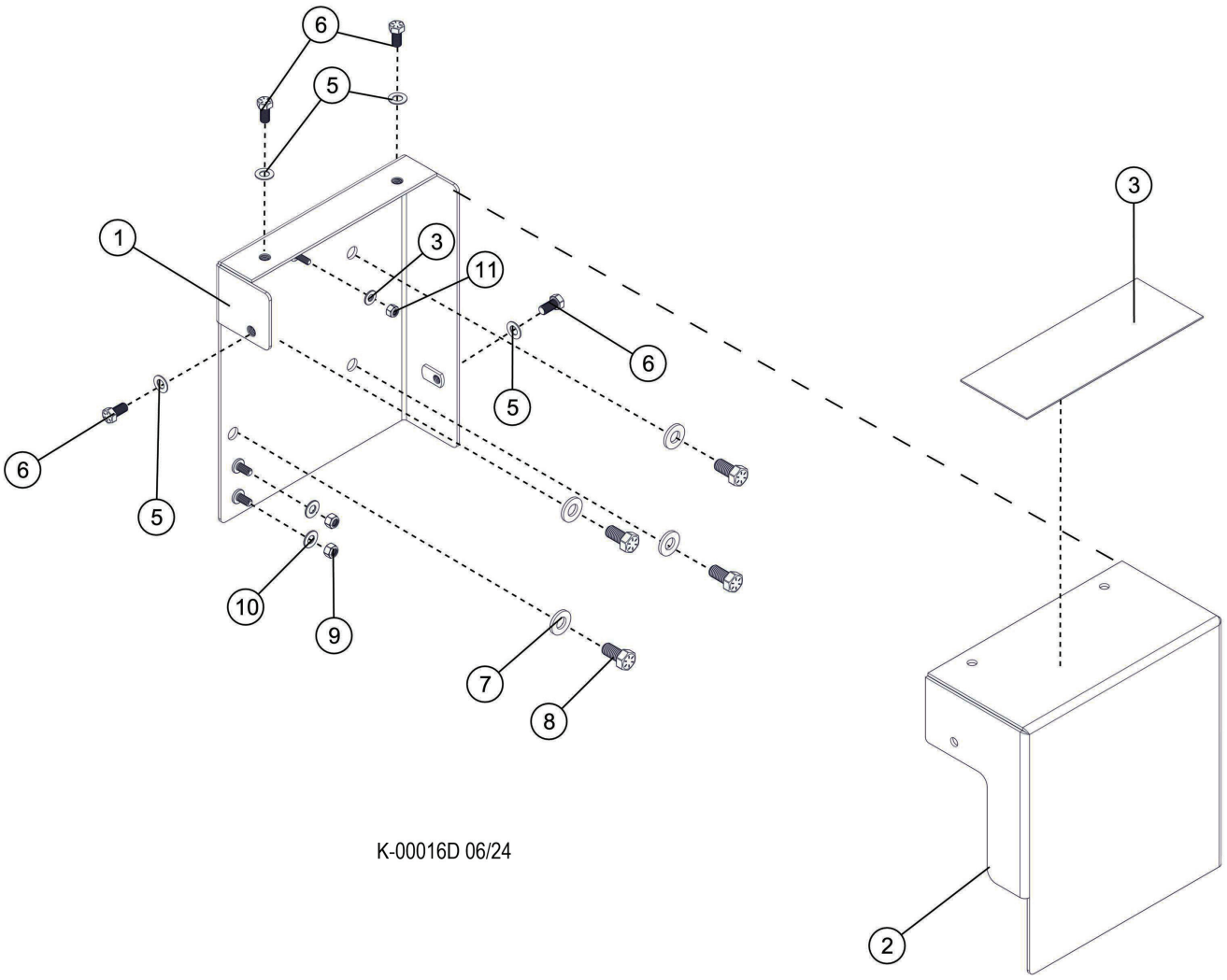


| Item | Part # | Description | Qty. |
|---|---|---|---|
| 1 | 65487 | WELDMENT, DRIER AND CAB VALVE MOUNT | 1 |
| 2 | 654890 | PLATE, DRIER AND CAB VALVE COVER | 1 |
| 3 | 65655 | NON-SKID, TAPE - 3.75” X 10” LONG | 1 |
| 4 | 10757 | WASHER, SAE FLAT - .25” | 1 |
| 5 | 15528 | WASHER, SAE FLAT - .375” | 4 |
| 6 | 15542 | BOLT - .375” X .75” | 4 |
| 7 | 15534 | WASHER, SAE FLAT - .5” | 4 |
| 8 | 10783 | BOLT - .5” X 1” | 4 |
| 9 | 10788 | NUT, NYLOCK - .3125” | 2 |
| 10 | 15559 | WASHER, SAE FLAT - .3125” | 2 |
| 11 | 15509 | NUT, NYLOCK - .25” | 1 |

# K100-00160 - CABIN RADIO

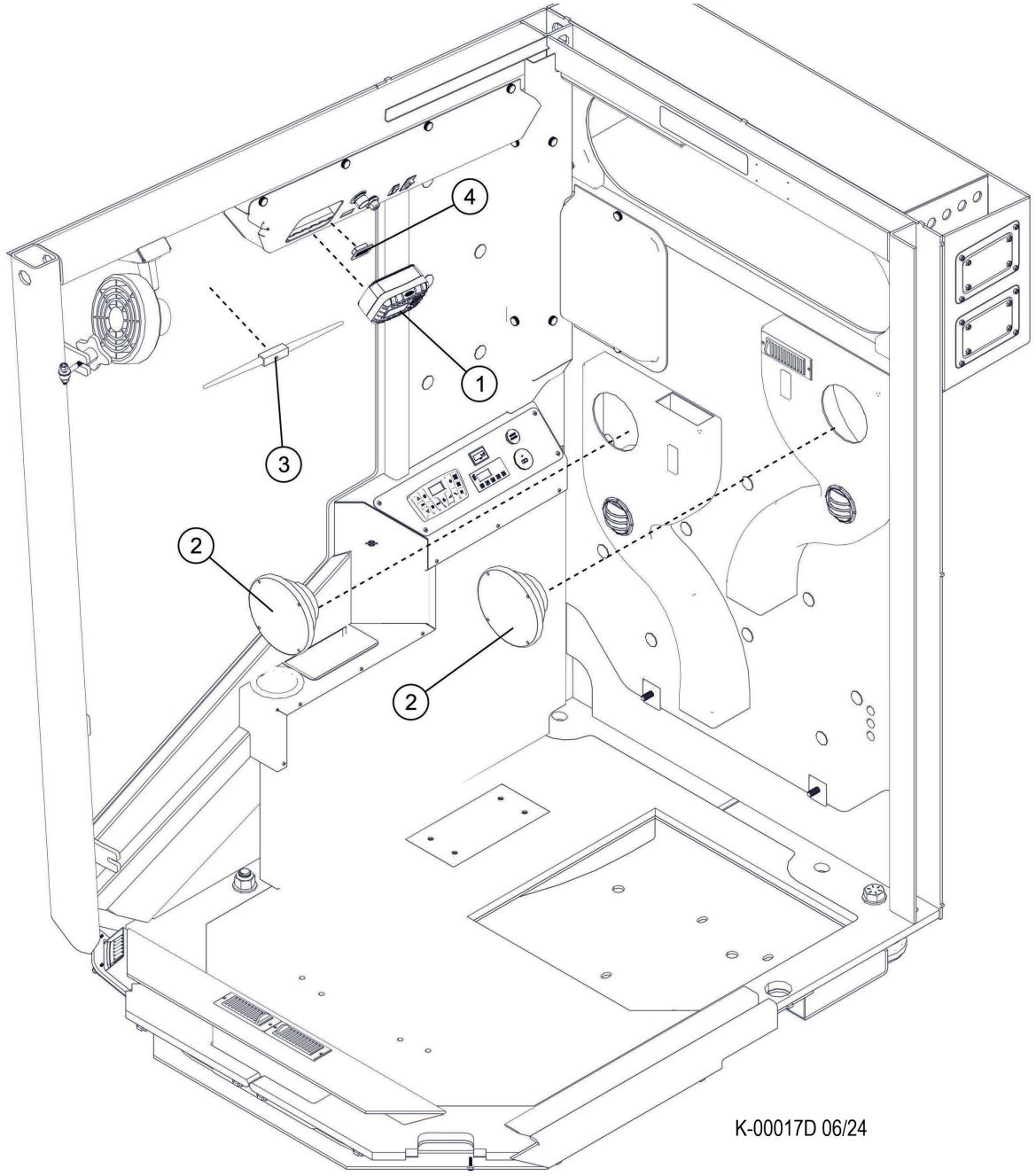


| Item | Part # | Description | Qty. |
|---|---|---|---|
| 1 | 57803 | RADIO, D SERIES W/ HANDS FREE CALLING | 1 |
| 2 | 57857 | SPEAKER PAIR, (CAB) | 2 |
| 3 | 57858 | ANTENNA, CAB - D-SERIES | 1 |
| 4 | 57876 | MICROPHONE, RADIO - D-SERIES | 1 |

# K100-00170 - CABIN FIRE EXTINGUISHER

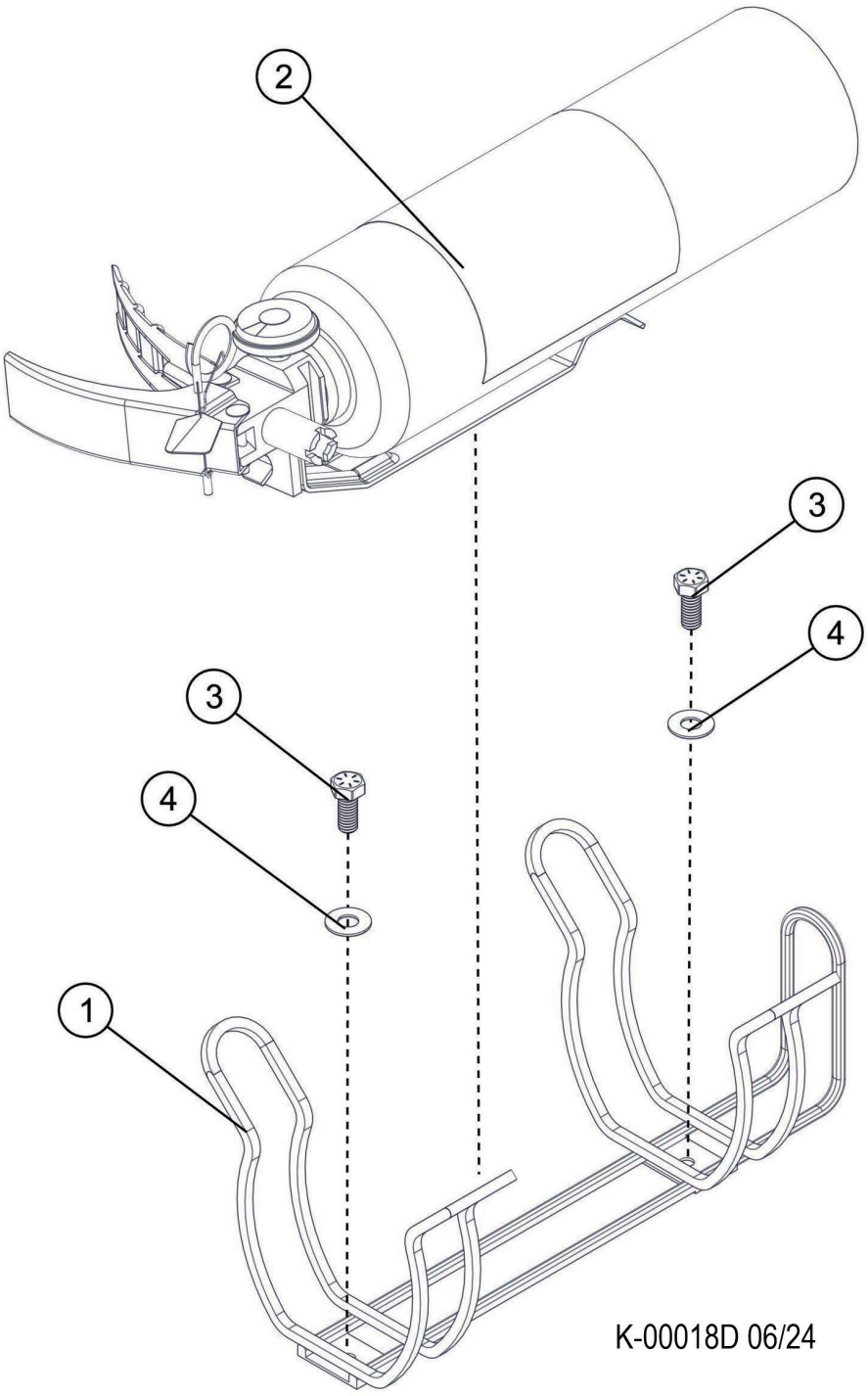


| Item | Part # | Description | Qty. |
|---|---|---|---|
| 1 | 57892 | BRACKET, FIRE EXTINGUISHER - 5 LBS | 1 |
| 2 | 57891 | FIRE EXTINGUISHER - 5 LBS - CAB D | 1 |
| 3 | 15605 | BOLT - .3125” X .75” | 2 |
| 4 | 15559 | WASHER, SAE FLAT - .3125” | 2 |

# K4208-2255700 - KOMTRAX COMPONENTS & INSTALLATION

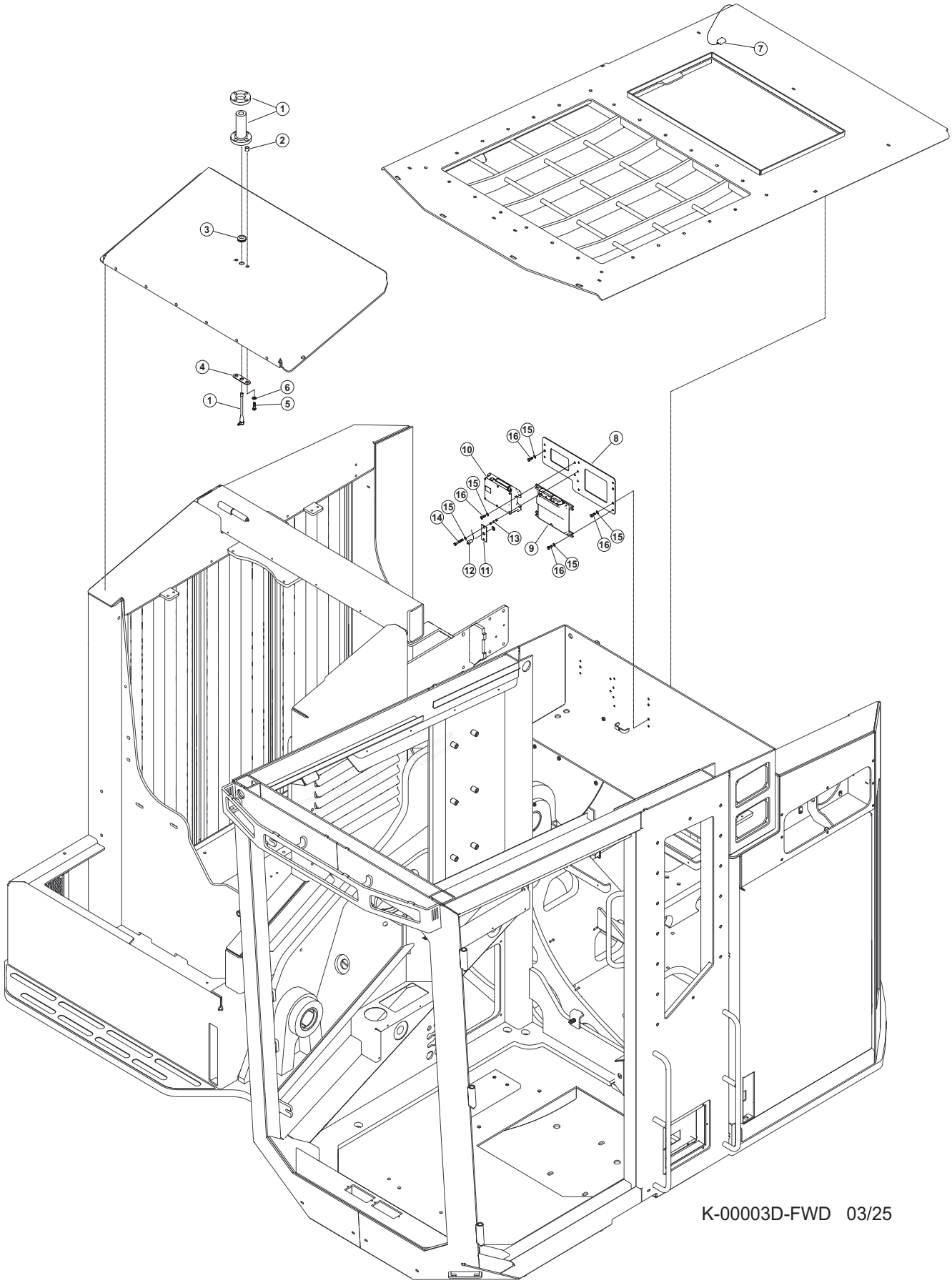

# K4208-2255700 - KOMTRAX COMPONENTS & INSTALLATION

| Item | Part # | Description | Qty. |
|---|---|---|---|
| 1 | 8A13102100 | ANTENNA, KOMTRAX | 1 |
| 2 | 4A10622890 | COLLAR | 4 |
| 3 | 4A10622060 | GROMMET | 1 |
| 4 | 4A10622910XC | PLATE | 1 |
| 5 | 10739 | BOLT - .5” X 1.5” | 4 |
| 6 | 15534 | WASHER, SAE FLAT - .5” | 4 |
| 7 | 8A13101320 | ANTENNA, GPS | 1 |
| 8 | 65331 | BRACKET, CAB - KOMTRAX | 1 |
| 9 | 7835739000 | CONTROLLER, TRANS | 1 |
| 10 | 7826253309 | CONTROLLER, TC330 | 1 |
| 11 | 1240639110 | PLATE, LIGHT | 1 |
| 12 | 12Y0639110 | SYSTEM OPERATING LAMP | 1 |
| 13 | 672120 | SPACER | 6 |
| 14 | 18273 | BOLT | 2 |
| 15 | 10757 | WASHER, SAE FLAT - .25” | 13 |
| 16 | 18309 | BOLT - .25” X 1.25” | 11 |
| * | 8A13102200 | CABLE - KOMTRAX | 1 |
| * | 2075332840 | GPS COVER - KOMTRAX | 1 |
| * | 4A10622931 | TUBE - KOMTRAX | 1 |
| * | 4A10622920NK | PLATE - KOMTRAX | 1 |
| * | 4235411340 | SPACER - KOMTRAX | 1 |
| * | 4230633170 | GROMMET - KOMTRAX | 2 |
| * | 58352 | HARNESS, KOMTRAX D-MODEL INSTALL | 1 |
| * | 65334 | STANDOFF 1.63, TAPPED .25-20 | 1 |
| * | 65335 | STANDOFF 1 IN, TAPPED .38-16 | 1 |
| * | HD1691939S | CONNECTOR, DEUTCH - 9 P | 1 |
| * | 0819212200 | CONNECTOR | 1 |
| * | 0819107420 | SOCKET, DEUTCH - 16-18ga | 1 |

***MEANS NOT SHOWN**

# K-2255700 - KOMTRAX COMPONENTS & INSTALLATION - (IRIDIUM ANTENNA)

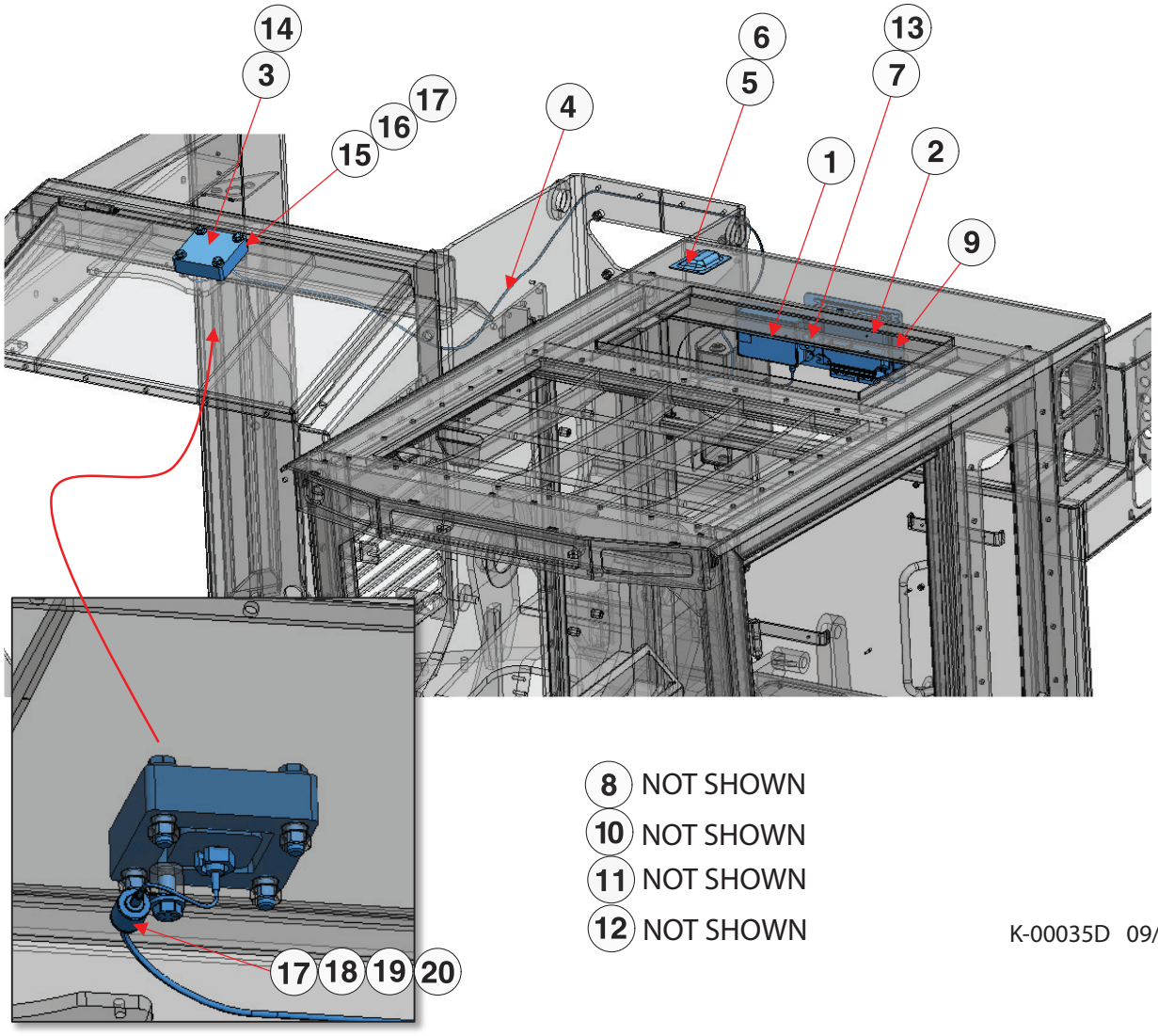


| Item | Part # | Description | Qty. |
|---|---|---|---|
| 1 | 7826253309 | CONTROLLER, TC330 - KOMTRAX | 1 |
| 2 | 7835739000 | CONTROLLER,TRANS - KOMTRAX | 1 |
| 3 | 8A13106100 | ANTENNA, KOMTRAX IRIDIUM | 1 |
| 4 | 8A13106110 | CABLE - KOMTRAX IRIDIUM | 1 |
| 5 | 8A13101370 | ANTENNA, GPS- KOMTRAX | 1 |
| 6 | 2075332840 | COVER | 1 |
| 7 | 12Y0639110 | LAMP | 1 |
| 8 | 68925 | HARNESS, KOMTRAX XC43 | 1 |
| 9 | 65332 | WELDMENT, KOMTRAX CAB MOUNT | 1 |
| 10 | HD1691939S | CONNECTOR, DEUTCH - 9 PIN | 1 |
| 11 | 0819212200 | CONNECTOR | 1 |
| 12 | 0819107420 | SOCKET, DEUTCH - 16-18ga | 2 |
| 13 | 672120 | SPACER, PLASTIC .5” X 2” | 2 |
| 14 | 689140 | COVER, IRIDIUM ANTENNA | 1 |
| 15 | 689290 | SPACER | 4 |
| 16 | 15565 | BOLT - .5” X 2.5” | 4 |
| 17 | 15534 | WASHER, SAE FLAT - .5” | 5 |
| 18 | 0443451912 | CLIP | 1 |
| 19 | 0709520213 | CUSHION | 1 |
| 20 | 10783 | BOLT - .5” X 1” | 1 |

# GUARDS - (M)

# M100-00010 - GULLWING DOOR INSTALLATION

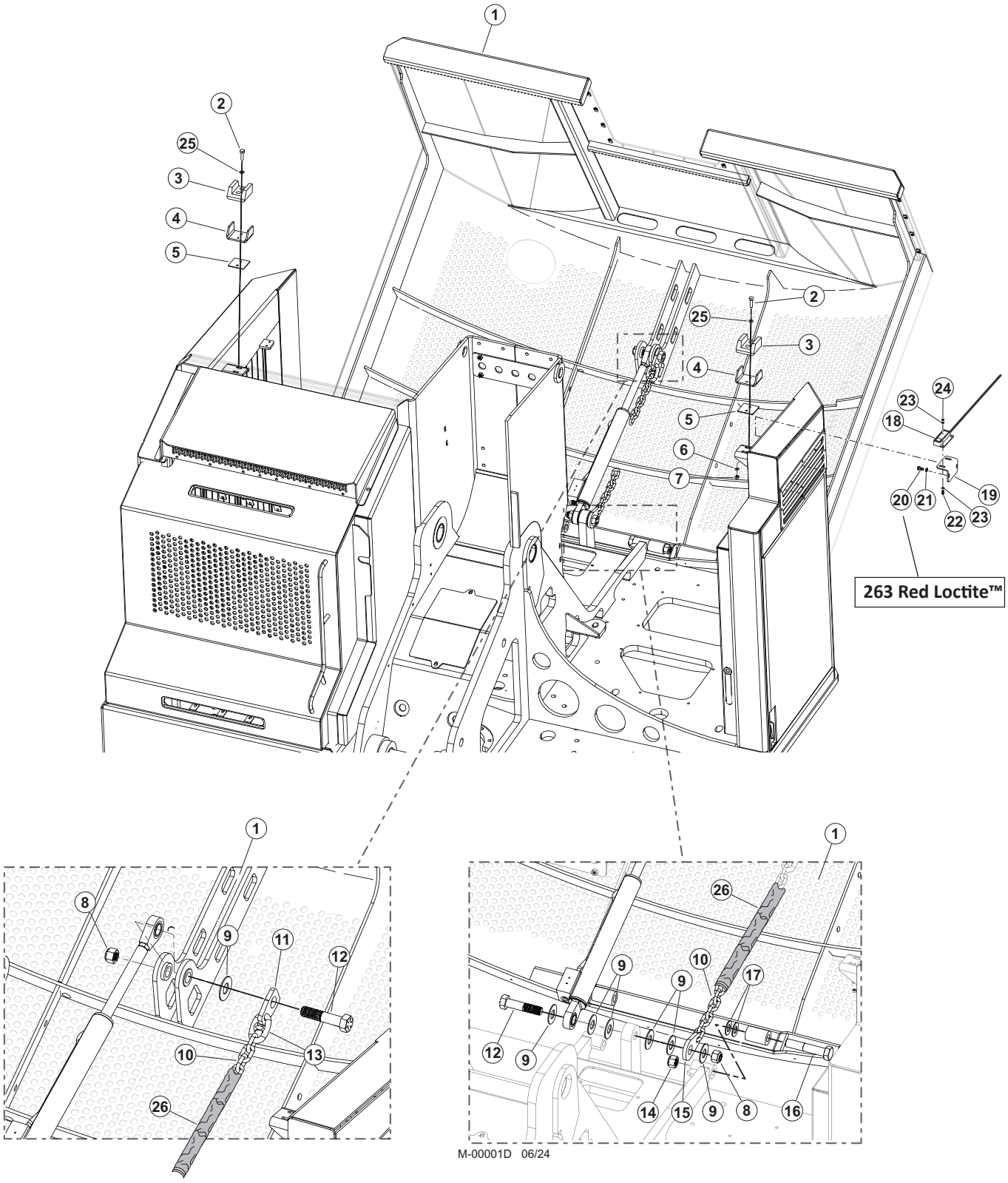

# M100-00010 - GULLWING DOOR INSTALLATION

| Item | Part # | Description | Qty. |
|---|---|---|---|
| 1 | 65948 | GULLWING, D SERIES | 1 |
| 2 | 10823 | BOLT - .3125” X 2.00” | 4 |
| 3 | 54511 | ISOLATOR, GULLWING MOUNTING-UHMW BLOCK | 2 |
| 4 | 54512 | CHANNEL, ISOLATOR MOUNT - GULLWING | 2 |
| 5 | 54520 | SPACER, GULLWING ISOLATOR | 2 |
| 6 | 10801 | WASHER, FLAT - .3125” | 4 |
| 7 | 10812 | NUT, LOCK - .3125” | 8 |
| 8 | 52026 | NUT,HEX GULLWING CYL. - 1.25” - GRD 9 | 2 |
| 9 | 22531 | WASHER, SAE FLAT - 1.25” | 8 |
| 10 | 55715 | CHAIN, 23 LINK - GULLWING GR 8100 | 1 |
| 11 | 54515 | LINK, GULLWING SAFETY CHAIN | 1 |
| 12 | 52025 | BOLT, GULLWING CYL. - 1.25” - 7 X 7” | 2 |
| 13 | 54260 | CLEVIS, 3/8” - GULLWING | 2 |
| 14 | 18253 | NUT, LOCK - 1.00” | 2 |
| 15 | 46496 | LINK, GULLWING SAFETY CHAIN | 1 |
| 16 | 15580 | BOLT - 1” X 8” | 2 |
| 17 | 15579 | WASHER, SAE FLAT - 1.00” | 4 |
| 18 | 55264 | SWITCH, LIMIT - GULLWING (MAGNETIC) | 1 |
| 19 | 46508 | BRACKET, GULLWING SWITCH | 1 |
| 20 | 15604 | BOLT - .25” X .75” **263 RED LOCTITE™** | 2 |
| 21 | 10800 | WASHER, FLAT - .25” | 2 |
| 22 | 59107 | SCREW, 10-24X3/4” PAN HD | 2 |
| 23 | 16208 | WASHER, FLAT - #10 | 2 |
| 24 | 16131 | NUT, NYLOCK - #10-24 | 2 |
| 25 | 15559 | WASHER, SAE FLAT - .3125” | 4 |
| 26 | 50188 | HOSE WRAP | 3’ |

# M100-00020 - GULLWING DOOR DEBRIS GUARDS

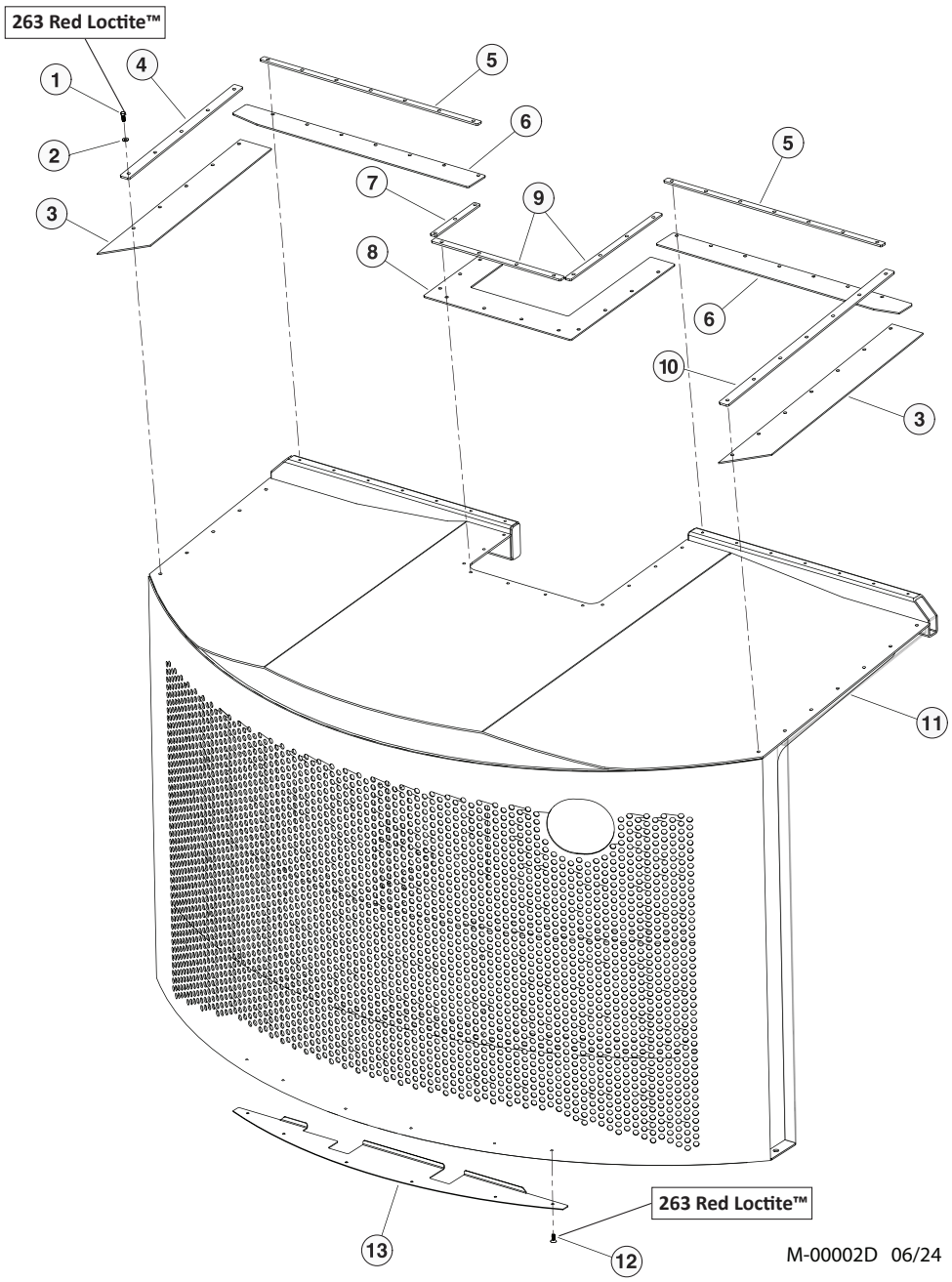


| Item | Part # | Description | Qty. |
|---|---|---|---|
| 1 | 11707 | BOLT - .375" X 1" **263 RED LOCTITE™** | 33 |
| 2 | 10802 | WASHER, FLAT - .375" | 41 |
| 3 | 60428 | RUBBER, GULLWING - LONG (RH) | 1 |
| 4 | 60427 | PLATE, GULLWING RUBBER HOLD DOWN - SIDE | 1 |
| 5 | 60099 | BAR, RUBBER MOUNT | 2 |
| 6 | 60465 | RUBBER, GULLWING FRONT | 2 |
| 7 | 60471 | BAR, MOUNTING - CENTER - SHORT | 1 |
| 8 | 60469 | RUBBER, GULLWING - CENTER (FRONT) | 1 |
| 9 | 60470 | BAR, MOUNTING - CENTER - LONG | 2 |
| 10 | 60426 | PLATE, GULLWING RUBBER HOLD DOWN - SIDE | 1 |
| 11 | 58226 | BOLT, BUTTON HEAD 1/4-20X3/8(GULL SHEILD | 6 |
| 12 | 60533 | GUARD, GULLWING LOWER **263 RED LOCTITE™** | 1 |
| 13 | 60429 | RUBBER, GULLWING - SHORT (LH) | 1 |

# M100-00030 - GULLWING DOOR EXHAUST TIP

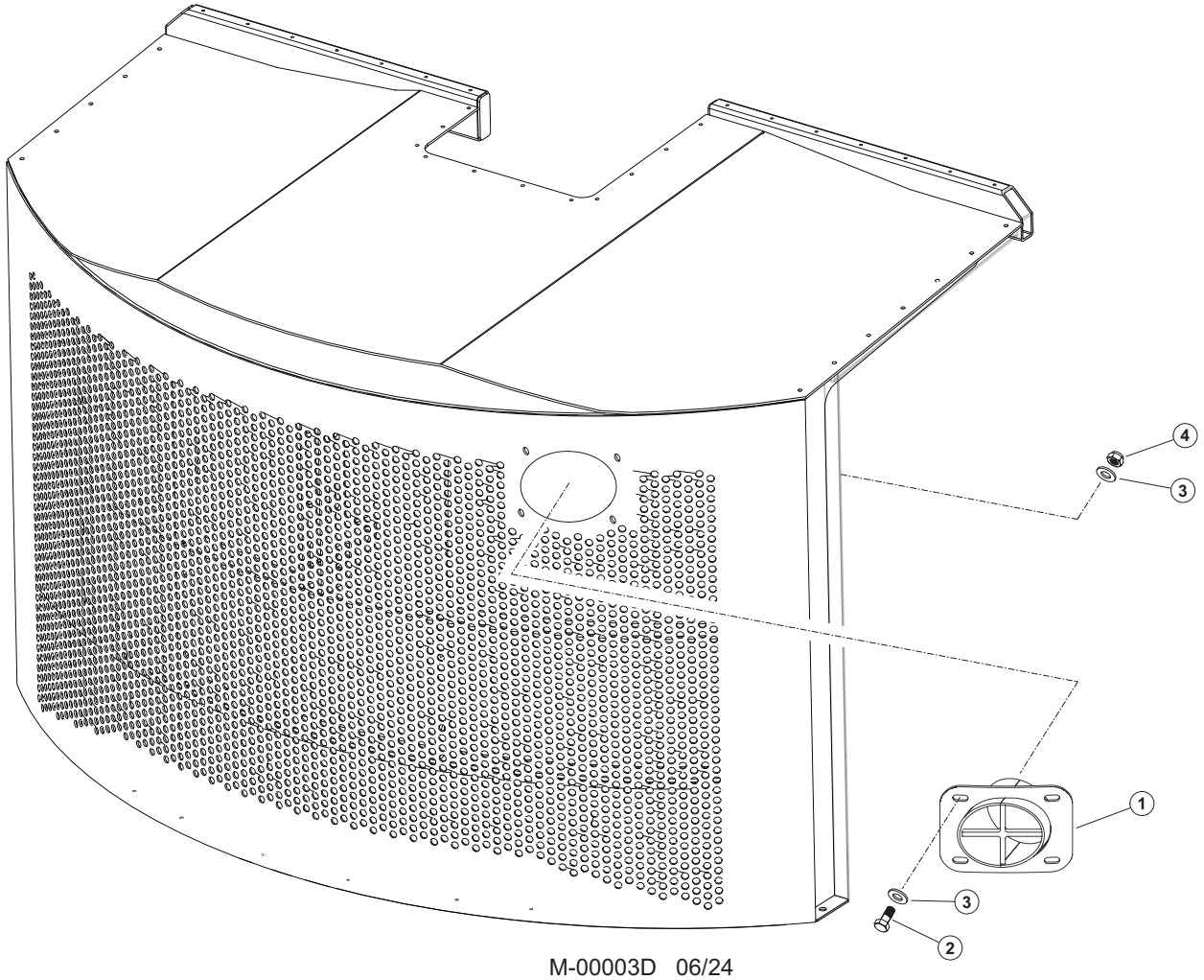


M-00003D 06/24

| Item | Part # | Description | Qty. |
|---|---|---|---|
| 1 | 60135 | GUARD, EXHAUST TIP CUMMINS STAGE 5 | 1 |
| 2 | 50100 | BOLT - .5” X 1.25” | 4 |
| 3 | 10804 | WASHER, FLAT - .5” | 8 |
| 4 | 10815 | NUT, LOCK - .5” | 4 |

# M100-00035 - GULLWING WALKWAY

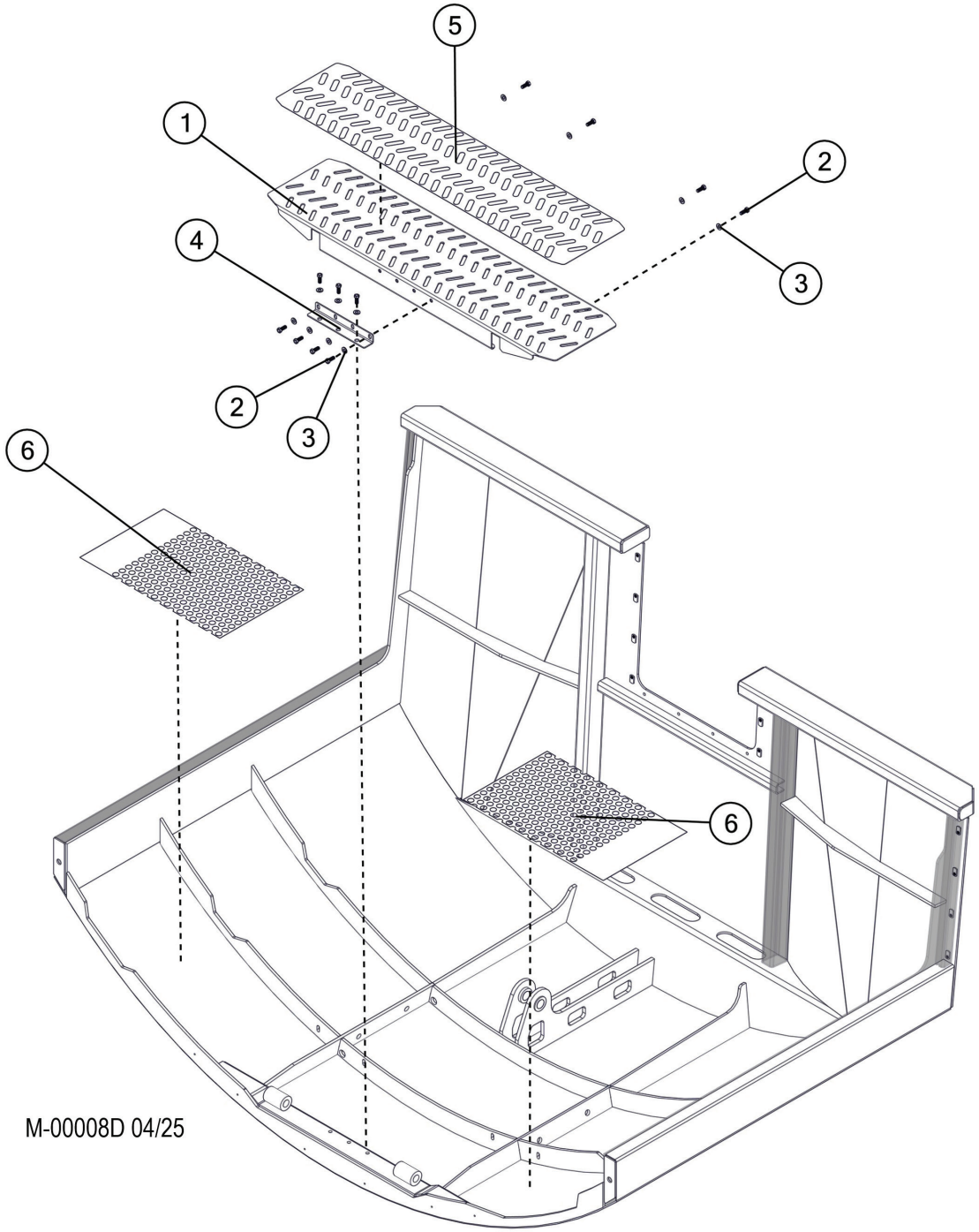

# M100-00035 - GULLWING WALKWAY

| Item | Part # | Description | Qty. |
|---|---|---|---|
| 1 | 65941 | WELDMENT, GULLWING WALKWAY | 1 |
| 2 | 11707 | BOLT - .375” X 1” | 11 |
| 3 | 10802 | WASHER, FLAT - .375” | 11 |
| 4 | 65944 | BRACKET, SUPPORT | 1 |
| 5 | 65943 | NON-SKID TAPE, GULLWING WALKWAY | 1 |
| 6 | 65929 | NON-SKID TAPE, GULLWING | 2 |

# M100-00040 - UPPER TURNTABLE DOOR & COVERS

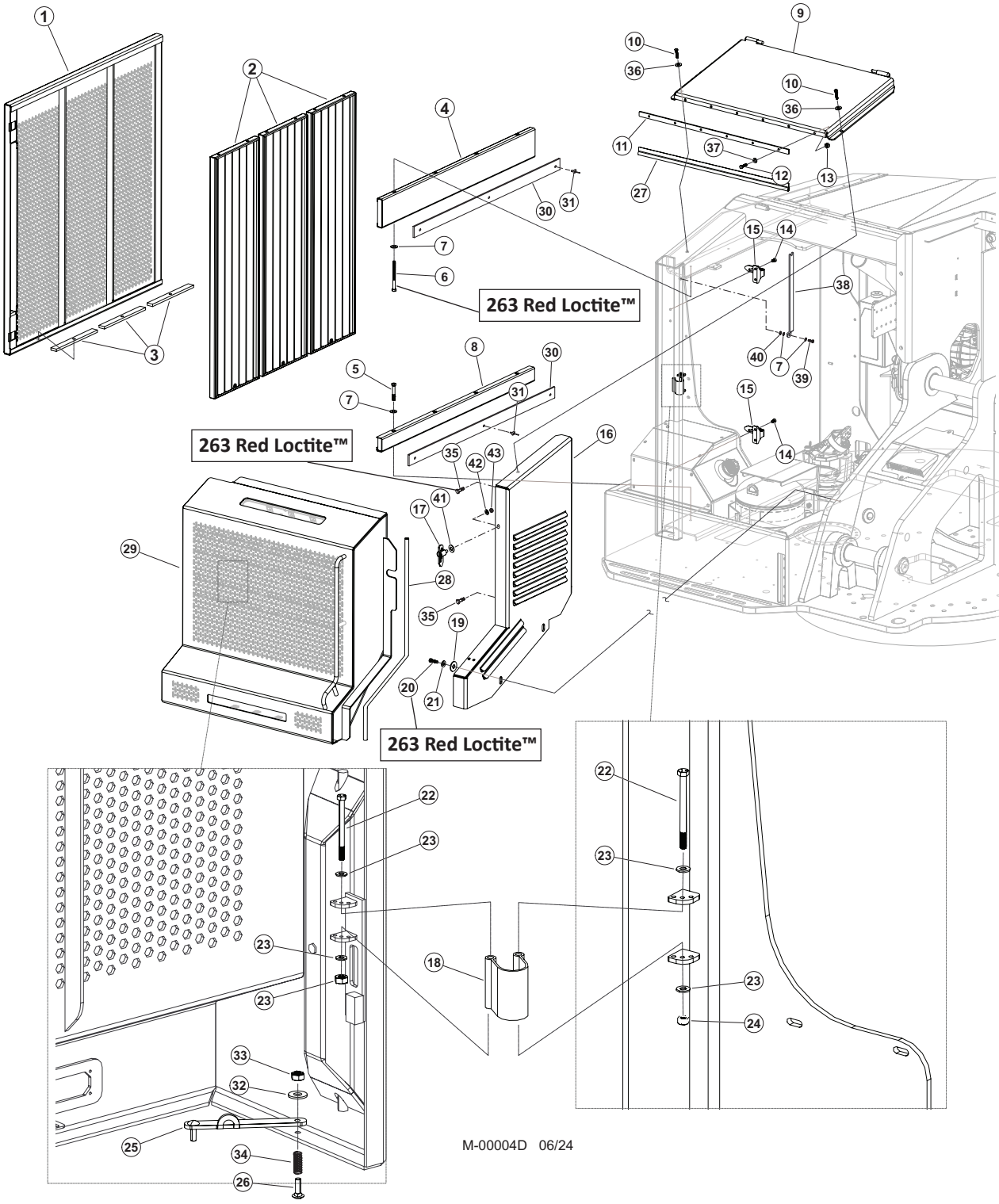

# M100-00040 - UPPER TURNTABLE DOOR & COVERS

| Item | Part # | Description | Qty. |
|---|---|---|---|
| 1 | 60650 | DOOR, COOLER | 1 |
| 2 | 60668 | SCREEN, RADIATOR - D MOD UPDATE COOLER | 3 |
| 3 | 46923 | RUBBER, COOLER DOOR SCREEN MOUNT | 3 |
| 4 | 60623 | WELDMENT, COOLER SILL D+ TOP | 1 |
| 5 | 59108 | BOLT - .375” X 3.75” | 4 |
| 6 | 58217 | BOLT, ALLEN 3/8-16 X 7 COOLER SILL D **263 RED LOCTITE™** | 4 |
| 7 | 15528 | WASHER, SAE FLAT - .375” | 10 |
| 8 | 60627 | WELDMENT, SILL COOLER BOTTOM D+ | 1 |
| 9 | 60635 | DOOR, COWL - TOP | 1 |
| 10 | 11707 | BOLT - .375” X 1” | 2 |
| 11 | 60141 | BAR, RUBBER MOUNT FRONT DOOR | 1 |
| 12 | 10822 | BOLT, 5/16”x1 1/4” | 6 |
| 13 | 10812 | NUT, LOCK - 5/16” | 6 |
| 14 | 58225 | BOLT, CAM LATCH 3/8-16x3/4” COUNTERSUNK | 4 |
| 15 | 51657 | LATCH, CAM - DOOR R.H. (RADIATOR-GULLW) | 2 |
| 16 | 606200 | PANEL, INNER FRONT - D | 1 |
| 17 | 19771 | LATCH, CAM - SHORT (PUMP GUARD) | 1 |
| 18 | 51981 | STRAP, DOOR STOP | 1 |
| 19 | 54148 | WASHER, BURNED - .66” X 2” x 1/4” | 2 |
| 20 | 50100 | BOLT - .5” X 1.25” **263 RED LOCTITE™** | 2 |
| 21 | 10804 | WASHER, FLAT - .5” | 4 |
| 22 | 10819 | BOLT - .25” X 3.25” | 2 |
| 23 | 10757 | WASHER, SAE FLAT - .25” | 4 |
| 24 | 10811 | NUT, LOCK - .25” | 2 |
| 25 | 60549 | BAR, PROP ROD D - SERIES | 1 |
| 26 | 59111 | SCREW, 5/16-18x2.0” FLAT HD | 1 |
| 27 | 24925 | CHANNEL, EDGE PROTECTOR - 3/16” BULB | 3.5’ |
| 28 | 18126 | WEATHERSTRIPPING, RUBBER-DOOR SEAL | A/R |
| 29 | 60615 | DOOR, FRONT SWINGOUT | 1 |
| 30 | 61111 | RUBBER | 2 |
| 31 | 59104 | RIVET, BLIND, 3/16” DIA, DOME HD | 6 |
| 32 | 10801 | WASHER, FLAT - .3125” | 1 |
| 33 | 15509 | NUT, NYLOCK - .25” | 1 |
| 34 | 58113 | SPRING | 1 |
| 35 | 10739 | BOLT - .5” X 1.5” **263 RED LOCTITE™** | 2 |
| 36 | 10802 | WASHER, FLAT - .375” | 2 |
| 37 | 15559 | WASHER, SAE FLAT - .3125” | 12 |
| 38 | 52619 | DOOR, COWL - TOP ; PROP ROD | 1 |
| 39 | 10402 | BOLT - .375” X 1.25” | 1 |
| 40 | 59110 | NUT, JAM, 3/8X16 | 1 |
| 41 | 10771 | WASHER, SAE FLAT - .625” | 1 |
| 42 | 15534 | WASHER, SAE FLAT - .5” | 1 |
| 43 | 10815 | NUT, LOCK - .5” | 1 |

# M100-00050 - UPPER TURNTABLE DOOR & COVERS

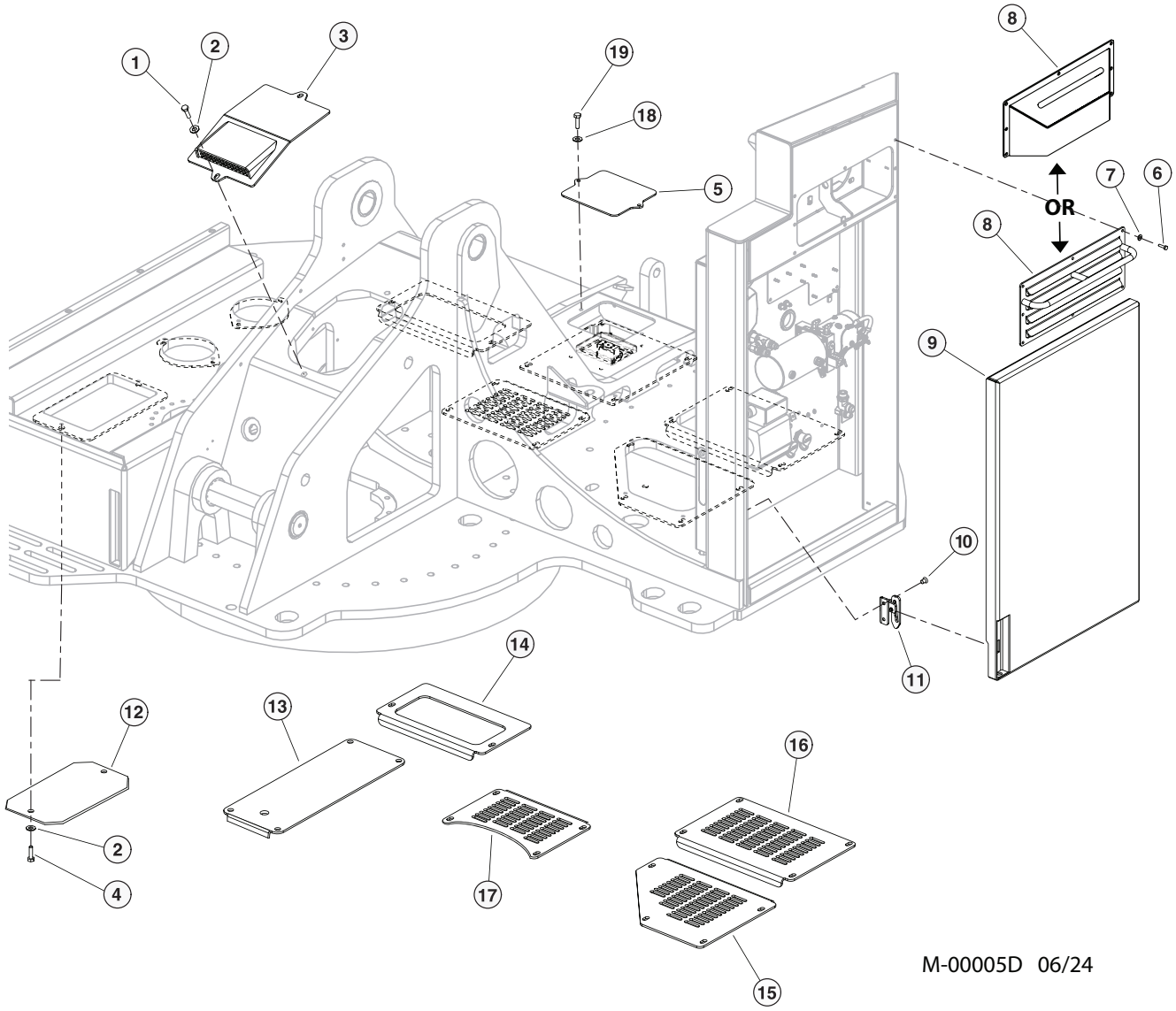


M-00005D 06/24

# M100-00050 - UPPER TURNTABLE DOOR & COVERS

| Item | Part # | Description | Qty. |
|---|---|---|---|
| 1 | 18933 | BOLT - .5” X 1.75” | 2 |
| 2 | 10804 | WASHER, FLAT - .5” | 24 |
| 3 | 60600 | COVER, ROTARY MANIFOLD - VENTED | 1 |
| 4 | 10783 | BOLT - .5” X 1” | 22 |
| 5 | 54569 | COVER, UPPER REAR TUBELINE | 1 |
| 6 | 15589 | BOLT - .3125” X 1” | 8 |
| 7 | 10801 | WASHER, FLAT - .3125” | 8 |
| 8 | 65429 | WELDMENT, INTAKE COVER | 1 |
| 8 | 48927 | GUARD,AIRINTAKE W/HANDLE HOLES | 1 |
| 9 | 47962 | WELDMENT, DOOR - ELECTRICAL | 1 |
| 10 | 58225 | BOLT, CAM LATCH 3/8-16X3/4 COUNTERSUNK | 2 |
| 11 | 51658 | LATCH, CAM - DOOR L.H. (OIL COOLER) | 1 |
| 12 | 60748 | COVER, HOC ACCESS | 1 |
| 13 | 60831 | COVER, COOLER ACCESS | 1 |
| 14 | 65476 | WELDMENT, COVER-OIL PAN | 1 |
| 15 | 46469 | COVER, TRIPLE DRIVE - FRONT | 1 |
| 16 | 46468 | COVER, TRIPLE DRIVE - REAR | 1 |
| 17 | 47892 | COVER, OIL PAN - FRONT | 1 |
| 18 | 15528 | WASHER, SAE FLAT - .375” | 2 |
| 19 | 11707 | BOLT - 0.375” X 1” | 2 |

# M100-00060 - HEAT SHIELD, PADDING, AND TRIM INSTALLATION

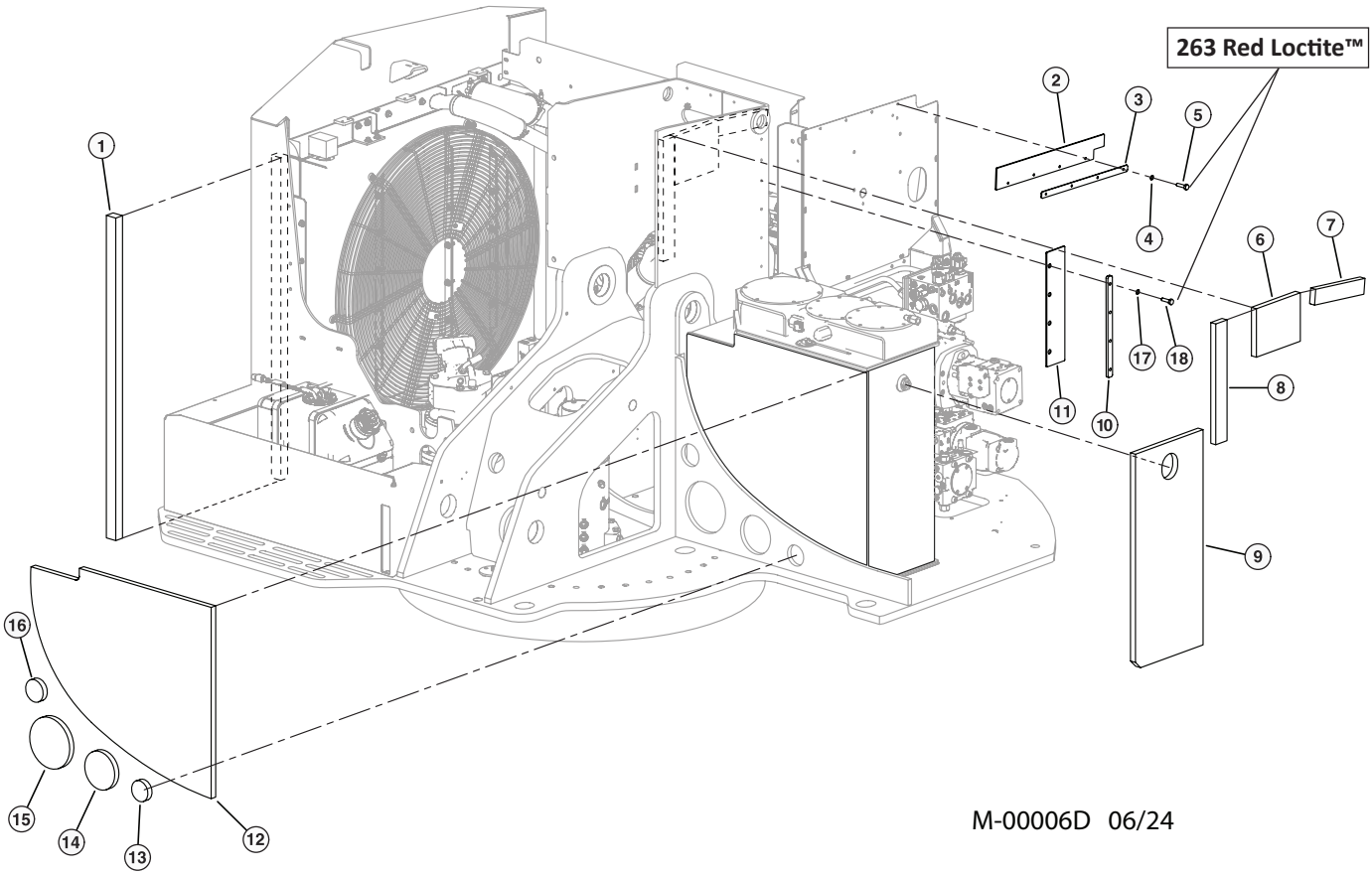


| Item | Part # | Description | Qty. |
|---|---|---|---|
| 1 | 58118 | FOAM, CLOSED CELL - 1.5” X 1.875” X 51” | 1 |
| 2 | 47206 | RUBBER, ENGINE BARRIER PANEL | 1 |
| 3 | 47205 | BAR, BARRIER PANEL - ENGINE | 1 |
| 4 | 10757 | WASHER, SAE FLAT - .25” | 4 |
| 5 | 15576 | BOLT - .25” X 1.00” **263 RED LOCTITE™** | 4 |
| 6 | 47344 | FOAM, CAB TO CHIMNEY | 1 |
| 7 | 60542 | FOAM, CAB TO CENTER (CUT TO SIZE) | 1 |
| 8 | 60542 | FOAM, CAB TO CENTER (CUT TO SIZE) | 1 |
| 9 | 47286 | INSULATION, HYD TANK TO PANEL | 1 |
| 10 | 60349 | PLATE, RUBBER HOLD DOWN CHIMNEY | 1 |
| 11 | 60479 | RUBBER, DEBRIS GUARD SCRAPPER | 1 |
| 12 | 58038 | INSULATION, CAB TO HYD TANK D-MOD | 4 |
| 13 | 42845 | TRIM, PANEL - CIRCLE - 3.25” | 1 |
| 14 | 42844 | TRIM, PANEL - CIRCLE - 5.75 OD | 1 |
| 15 | 42741 | TRIM, PANEL - CIRCLE - 7.75” OD | 1 |
| 16 | 42843 | TRIM, PANEL - CIRCLE 3.38” O.D. | 1 |
| 17 | 15528 | WASHER, SAE FLAT - .375” | 4 |
| 18 | 11707 | BOLT - .375” X 1” **263 RED LOCTITE™** | 4 |

# M100-00070 - STRUCTURE PANELS

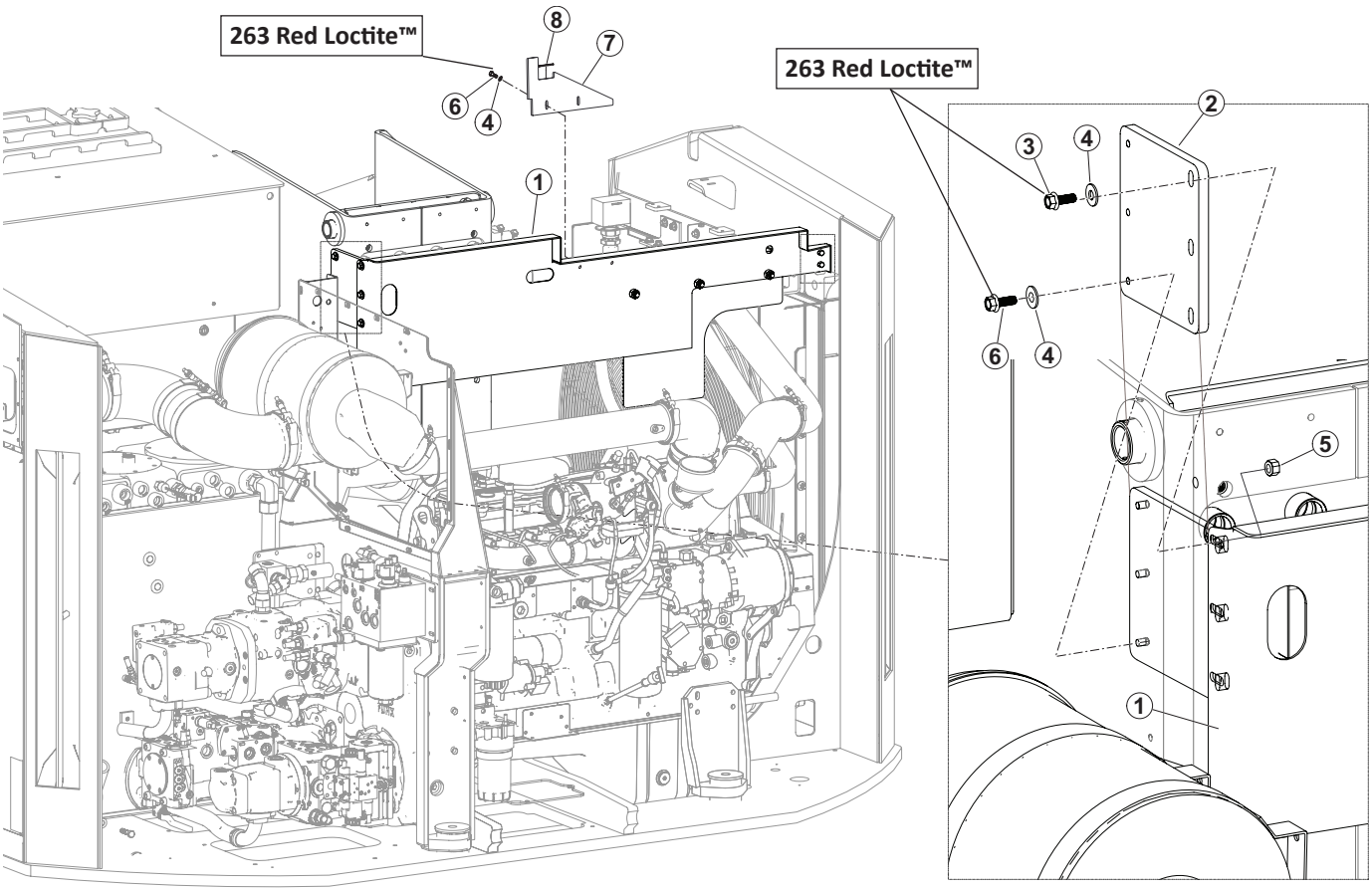


M-00007D 06/24

| Item | Part # | Description | Qty. |
|---|---|---|---|
| 1 | 60443 | BARRIER, COOLER PANEL | 1 |
| 2 | 60508 | PLATE, BARRIER PANEL MTG | 1 |
| 3 | 15542 | BOLT - .375” X 3/4” **263 RED LOCTITE™** | 3 |
| 4 | 10802 | WASHER, FLAT - .375” | 3 |
| 5 | 11707 | BOLT - .375” X 1” | 3 |
| 6 | 10802 | WASHER, FLAT - .375” **263 RED LOCTITE™** | 3 |
| 7 | 60737 | PLATE, BARRIER PANEL - FILLER | 3 |
| 8 | 24925 | CHANNEL, EDGE PROTECTOR - 3/16”BULB(STR) | 1 |

# M-2228700 - UPPER TURNTABLE DOOR & COVERS - (DOOR PROP)

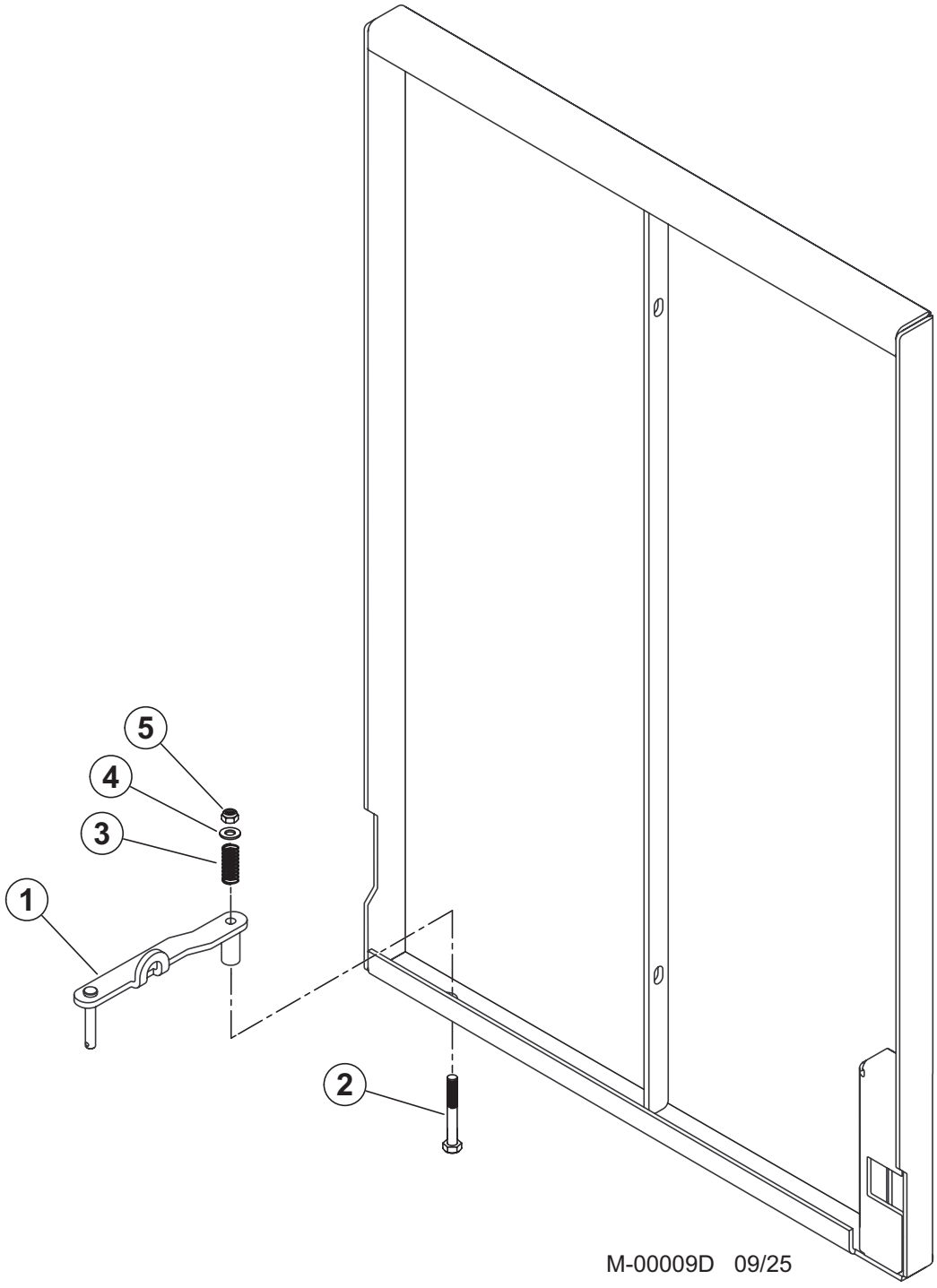


| Item | Part # | Description | Qty. |
|---|---|---|---|
| 1 | 608150 | ASSY, PROP ROD - EU | 1 |
| 2 | 23265 | BOLT - .375” X 2.25” | 1 |
| 3 | 58113 | SPRING, DOOR - PROP ROD | 1 |
| 4 | 15528 | WASHER, SAE FLAT - .375” | 1 |
| 5 | 10813 | NUT, LOCK - .375” | 1 |

# SWING CIRCLE AND RELATED PARTS - (N)

# N100-00000 - SWING CIRCLE

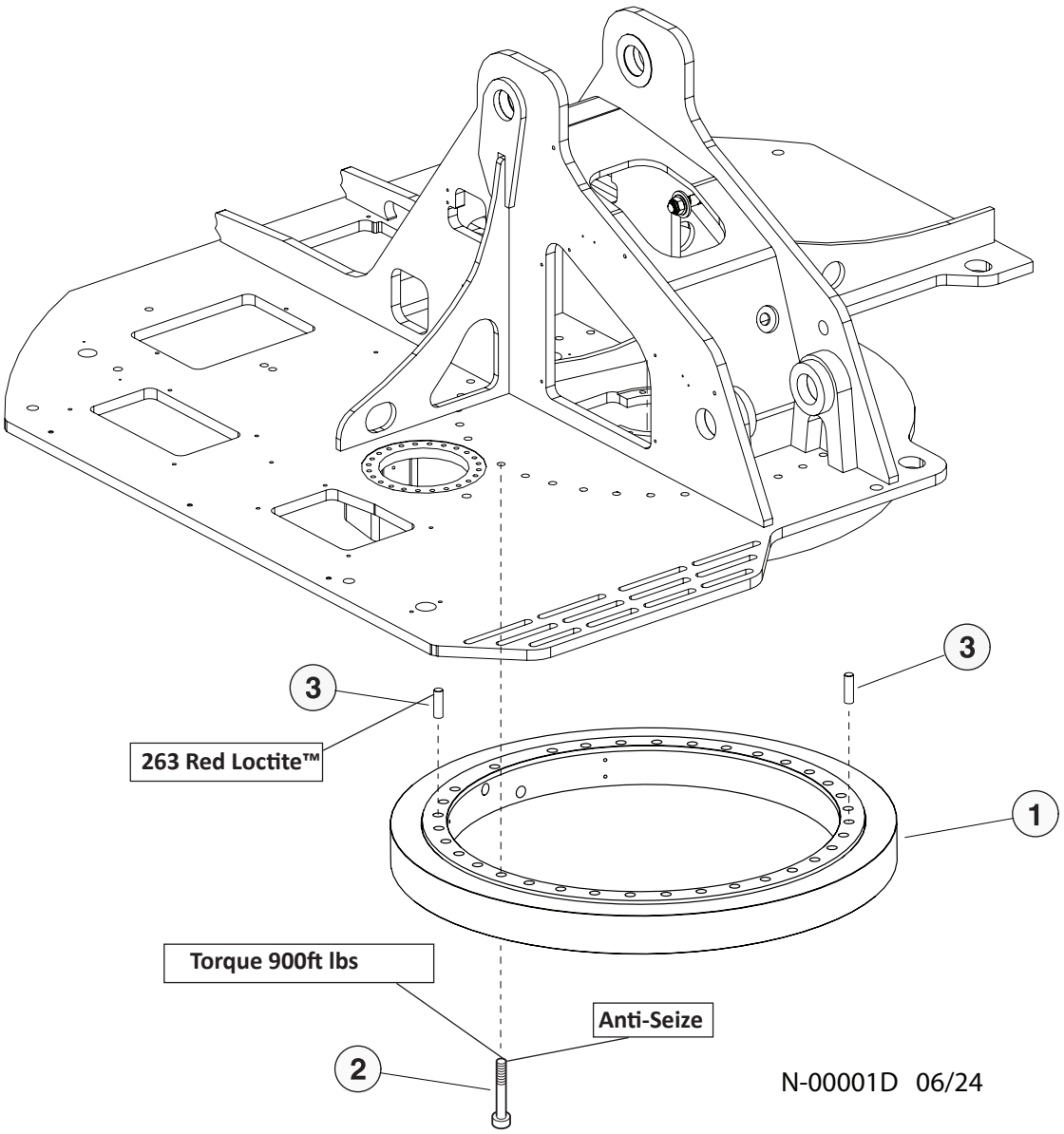


| Item | Part # | Description | Qty. |
|---|---|---|---|
| 1 | 53697 | BEARING, SWING - 3.81” WIDE HARDEN TEETH | 1 |
| 2 | 51690 | BOLT, ALLEN HEAD - 1” X 4.5” (SWING BRG) **ANTI-SEIZE (TORQUE 900FT LBS)** | 30 |
| 3 | 53832 | DOWEL PIN **263 RED LOCTITE™** | 2 |

# N100-00010 - SWING CIRCLE

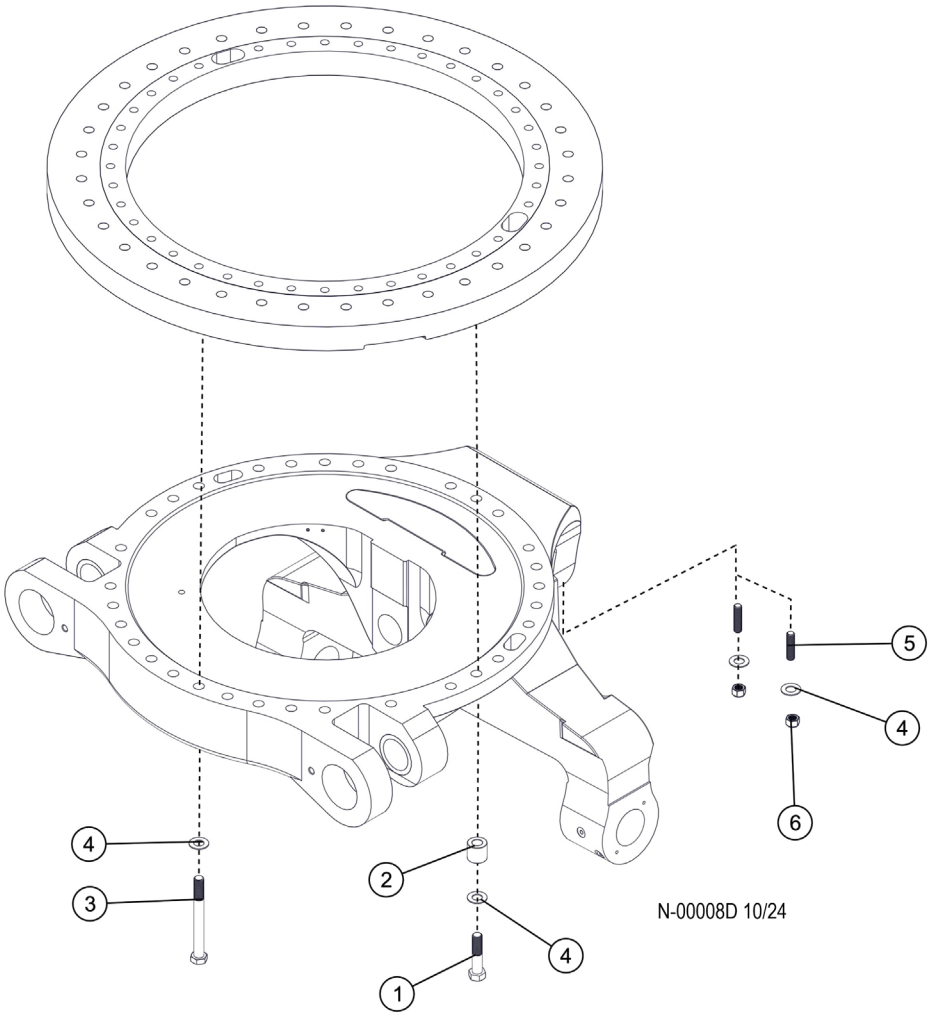


| Item | Part # | Description | Qty. |
|---|---|---|---|
| 1 | 50263 | BOLT - 1” X 5.5” | 10 |
| 2 | 12463 | SPACER, BOLT - LOWER TURNTABLE 1.88L | 10 |
| 3 | 18529 | BOLT - 1” X 8.5” | 10 |
| 4 | 18532 | WASHER, SAE FLAT - 1” (EXTRA THICK) | 22 |
| 5 | 53586 | STUD - 1”- 8 X 7” TRACK MACHINE | 2 |
| 6 | 19073 | NUT, HEX - 1” | 2 |
| | | | 2 |

# N100-00020 - SWING CIRCLE

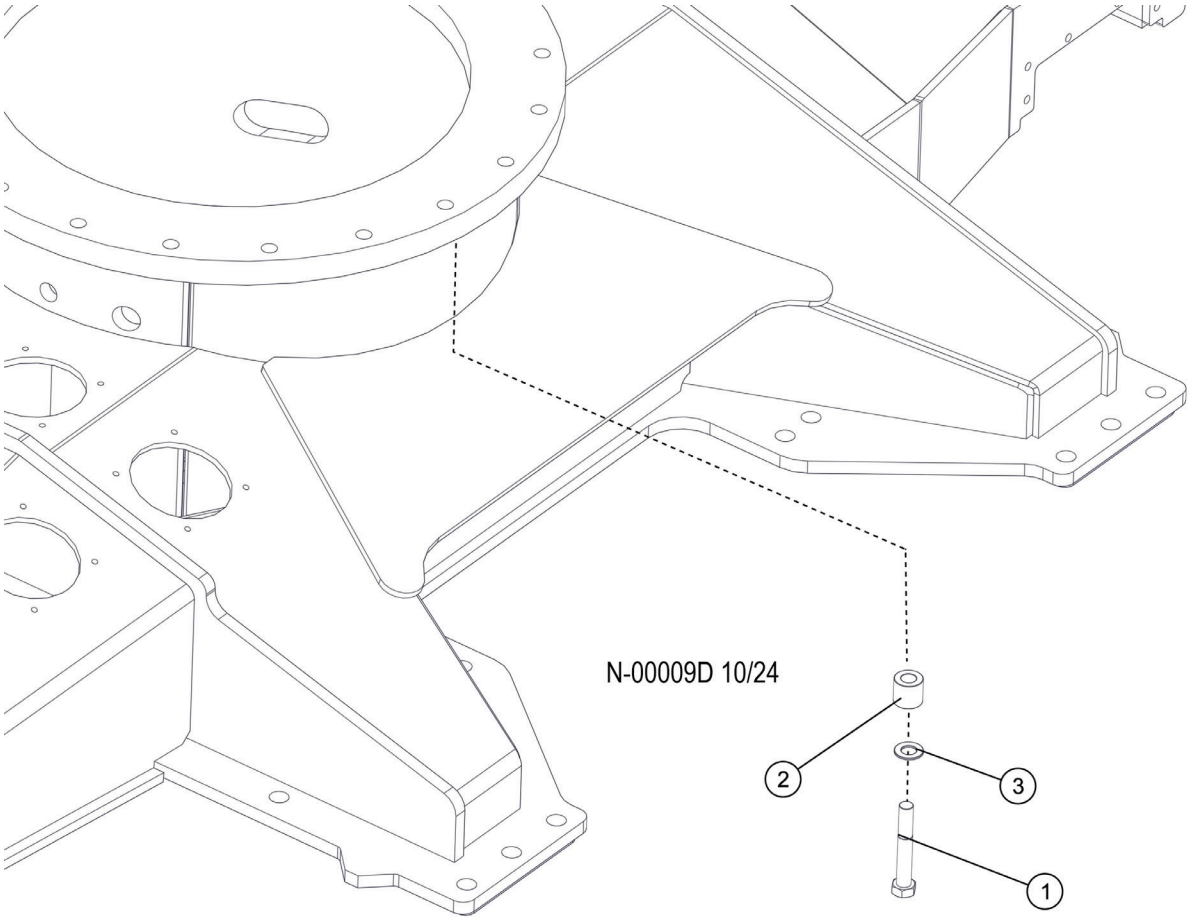


| Item | Part # | Description | Qty. |
|---|---|---|---|
| 1 | 50263 | BOLT - 1” X 5.5” | 22 |
| 2 | 12463 | SPACER, BOLT - LOWER TURNTABLE 1.88L | 22 |
| 3 | 18532 | WASHER, SAE FLAT - 1” (EXTRA THICK) | 22 |

# N100-00010 - SWING MOTOR INSTALLATION

**NOTE: HYDRAULIC FITTINGS GET 545 LOCTITE™**

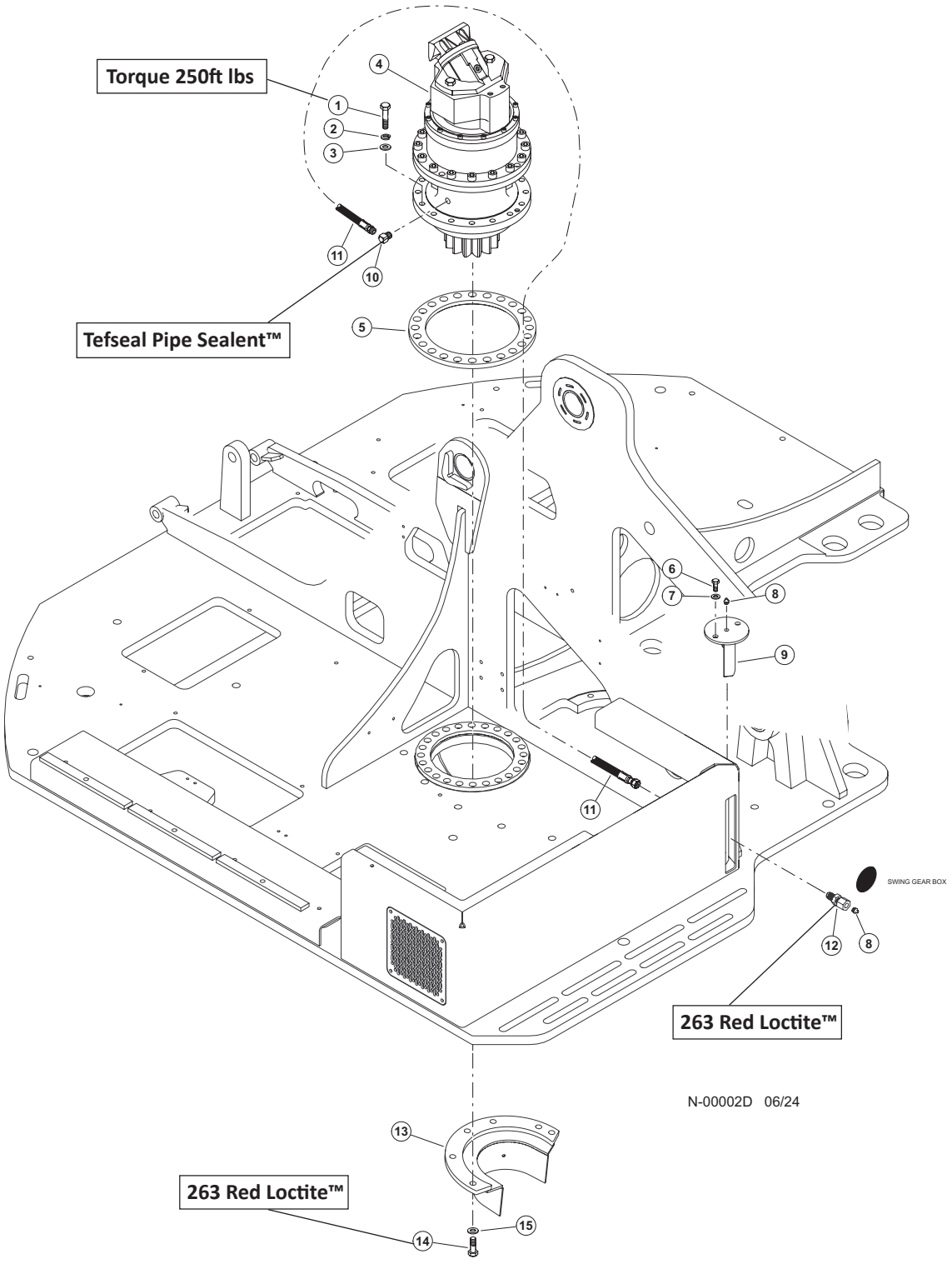

# N100-00010 - SWING MOTOR INSTALLATION

| Item | Part # | Description | Qty. |
|---|---|---|---|
| 1 | 57870 | BOLT - .625” X 2.75” **(TORQUE 250FT LBS)** | 24 |
| 2 | 57871 | WASHER, SURELOK - 5/8” | 24 |
| 3 | 23210 | WASHER, SAE FLAT - .625” (EXTRA THICK) | 24 |
| 4 | 52745 | SWING MOTOR | 1 |
| 5 | 54026 | RING, SPACER SWING GEARBOX | 1 |
| 6 | 15605 | BOLT - .3125” X .75” | 2 |
| 7 | 15559 | WASHER, SAE FLAT - .3125” | 2 |
| 8 | 58394 | ZERK, GREASE - 1/8” 90DEG | 2 |
| 9 | 17612 | CUP, BULL GEAR GREASE - WIDE GEAR | 1 |
| 10 | 22281 | ELBOW, 1/8-27 NPTF(M), 1/8-17 NPTF(F),90 **TEFSEAL PIPE SEALENT™** | 1 |
| 11 | 57724 | HOSE, GREASE 2054 02-02PS-04JS SW | 1 |
| 12 | 15658 | CONNECTOR, STR BULKHEAD - 2239-2-4S **263 RED LOCTITE™** | 1 |
| 13 | 54140 | GREASE CUP, BULL GEAR COVER | 1 |
| 14 | 10739 | BOLT, 0.5” X 1.5” **263 RED LOCTITE™** | 3 |
| 15 | 15534 | WASHER, 0.5” | 3 |

# N100-00011 - SWING MOTOR COMPONENTS

**NOTE: APPLY GREASE TO O-RINGS**

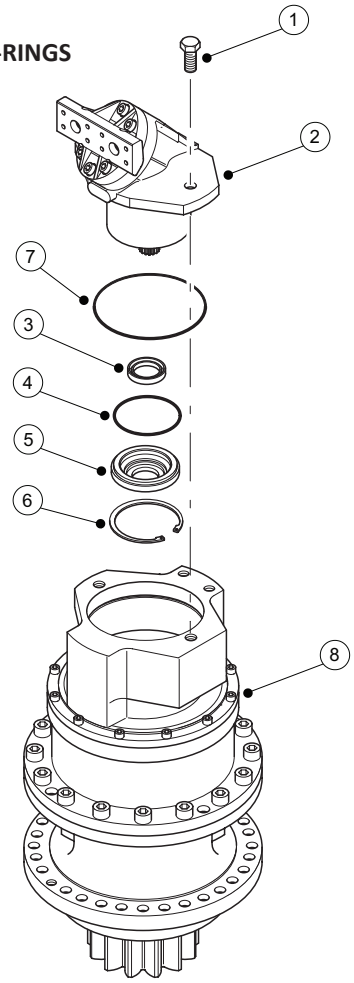


Parts T3839 **05/23**

| Item | Part # | Description | Qty. |
|---|---|---|---|
| | 52745 | MOTOR, SWING - ECCENTRIC L&S W/56 MOTOR | 1 |
| 1 | 20661 | BOLT - 16MM-2.0P X 35MM | 2 |
| 2 | 17238 | MOTOR, HYDRAULIC - REXROTH A2FE56 CC | 1 |
| 3 | 51638 | SEAL, SHAFT - 56CC | 1 |
| 4 | 51639 | O-RING, FRONT COVER - 56CC | 1 |
| 5 | 21578 | COVER, FRONT | 1 |
| 6 | 21579 | RING, SEAL RETAINING | 1 |
| 7 | 21580 | O-RING, MOTOR PILOT | 1 |
| 8 | 54394 | GEARBOX - LOHMANN ECCENTRIC | 1 |
| | 80003SK | SEAL KIT, GEARBOX HOUSING (INSIDE) | 1 |
| | | BREAK HOUSING SEALS: | |
| | R916461473 | LARGE DIAMETER | 1 |
| | R916461674 | SMALL DIAMETER | 1 |
| | 57710 | BRAKE DISC KIT | 1 |

**Note:**
Due to warranty policy restrictions imposed by component suppliers, it is not recommended that the component be disassembled further than is shown in the illustration.

# N100-00012 - SWING MOTOR COMPONENTS

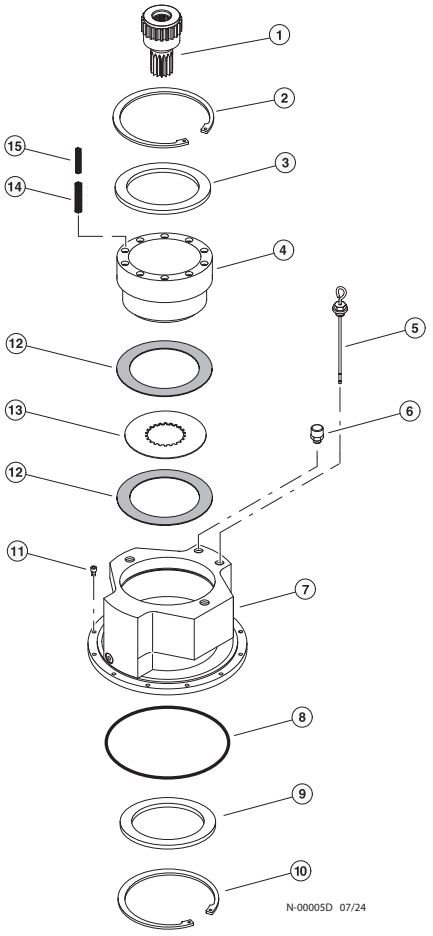


**NOTE: APPLY GREASE TO O-RINGS**

| Item | Part # | Description | Qty. |
|---|---|---|---|
| | 54394 | GEARBOX - Lohmann ECCENTRIC | 1 |
| 1 | 21565 | SHAFT, BRAKE | 1 |
| 2 | 21566 | RING, SNAP - UPPER BRAKE | 1 |
| 3 | 21567 | PLATE, BACK-UP - UPPER BRAKE | 1 |
| 4 | 21568 | PISTON, BRAKE | 1 |
| 5 | 21569 | DIPSTICK | 1 |
| | 21571 | RING, SEAL | 1 |
| 6 | 21570 | BREATHER | 1 |
| | 21571 | RING, SEAL | 1 |
| 7 | NO P/N AVAILIBLE | HOUSING, BRAKE | 1 |
| 8 | 21572 | O-RING, BRAKE HOUSING | 1 |
| 9 | 21573 | PLATE, BACK-UP - LOWER BRAKE | 1 |
| 10 | 21574 | RING, SNAP - LOWER BRAKE | 1 |
| 11 | 21575 | BOLT, ALLEN HEAD - 8MM X 25MM | 12 |
| 12 | INCLUDED WITH 57710 | DISC, BRAKE | 5 |
| 13 | INCLUDED WITH 57710 | DISC, SPACER | 4 |
| 14 | INCLUDED WITH 57710 | SPRING, OUTER | 10 |
| 15 | INCLUDED WITH 57710 | SPRING, INNER | 10 |
| | 57710 | BRAKE DISC KIT | 1 |

**Note:**
Due to warranty policy restrictions imposed by component suppliers, it is not recommended that the component be disassembled further than is shown in the illustration.

# N100-00020 - ROTARY MANIFOLD INSTALLATION

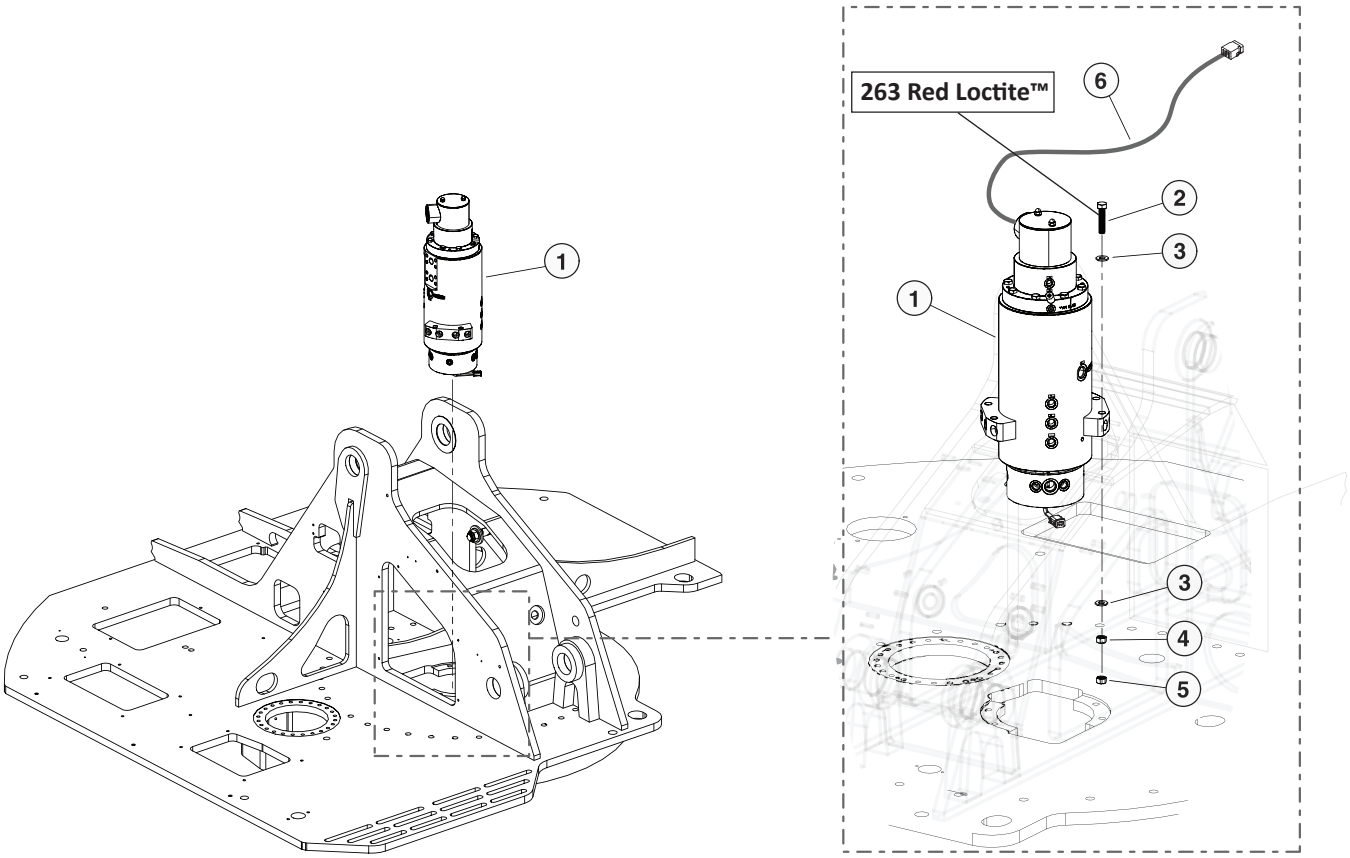


N-00003D 06/24

| Item | Part # | Description | Qty. |
|---|---|---|---|
| 1 | 650670 | MANIFOLD, ROTARY - 14 PORT TRACK (HYDRO | 1 |
| 2 | 10838 | BOLT - .625 X 5" **263 RED LOCTITE™** | 4 |
| 3 | 23210 | WASHER, SAE FLAT - .625" (EXTRA THICK) | 8 |
| 4 | 17515 | NUT, HEX - .625" | 4 |
| 5 | 10816 | NUT, LOCK - .625" | 4 |
| 6 | 57210 | HARNESS, CAB TO RM TRACK-AUTO LEVEL | 1 |

# N100-00030 - ROTARY MANIFOLD SWIVEL LOCK ARM

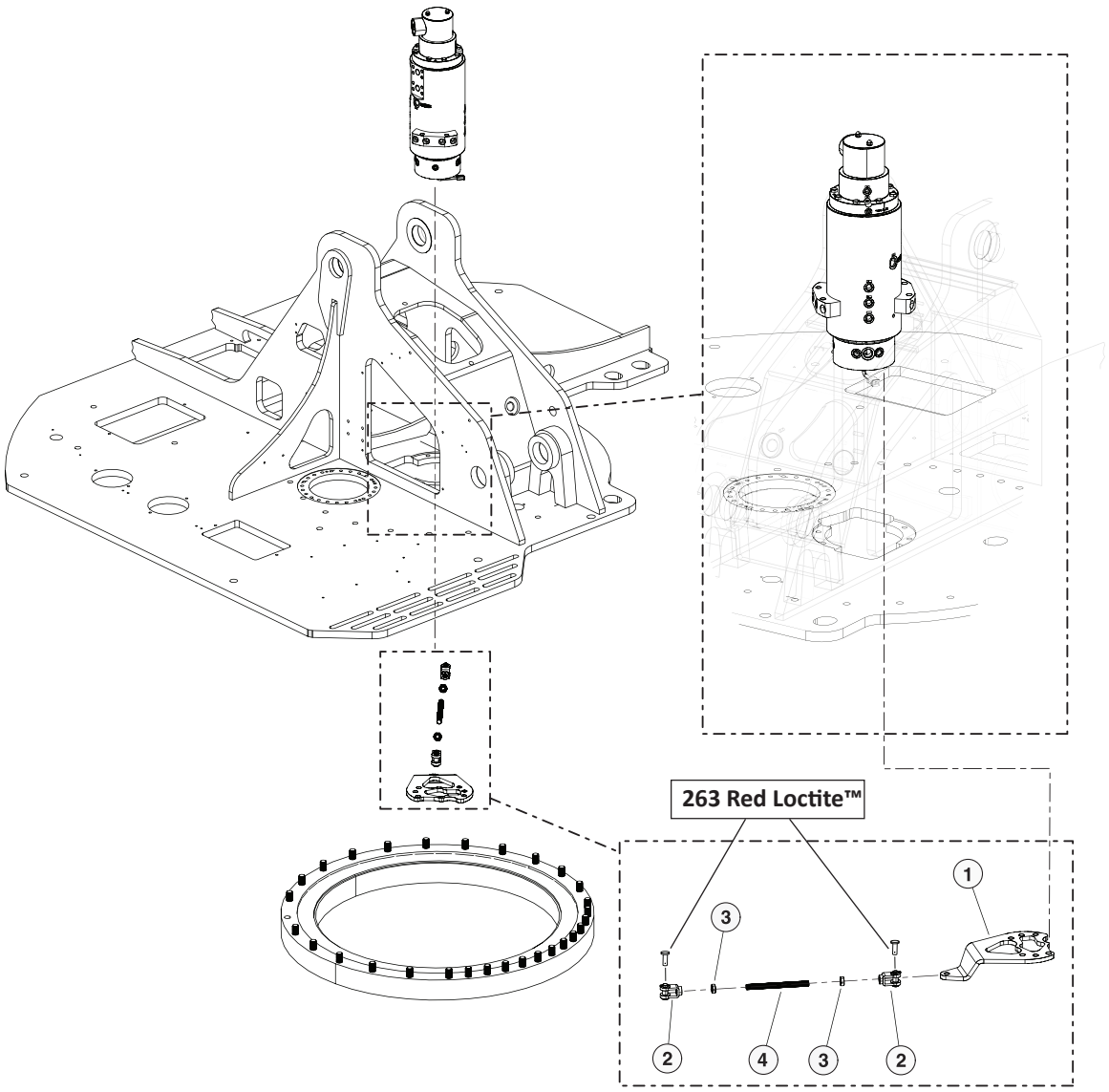


N-00004D 06/24

| Item | Part # | Description | Qty. |
|---|---|---|---|
| 1 | 605060 | BRACKET, SWIVEL LOCK ARM | 1 |
| 2 | 52381 | YOKE, ROTARY MANIFOLD 5/8” X 5/8” | 2 |
| 3 | 52395 | NUT, JAM .63-18NF HEX (PLATED) | 2 |
| 4 | 52394 | STUD, 5/8”-18NF X 7.5 LG (ZINC PLATED | 1 |

# TRAVEL AND LOWER PIPING - (P)

# P100-00010 - 9’6” (TL725, TL735 & TL745) & 10’4” (TL735) LEVELING CARBODY HOSE & FITTINGS (RM. TO BULKHEAD & LH TRACK MOTOR FITTINGS)

**NOTE: HYDRAULIC FITTINGS GET 545 LOCTITE™**

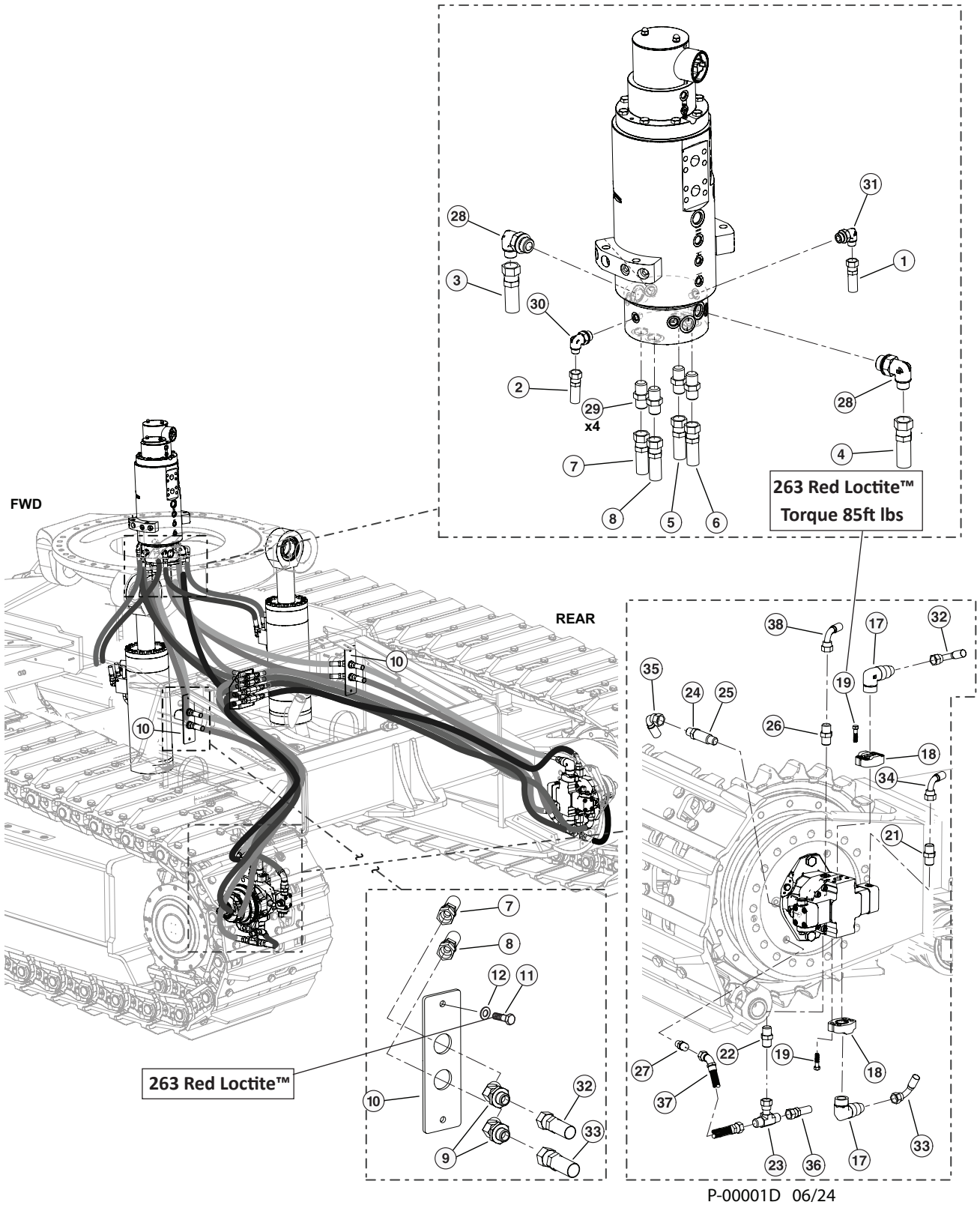


P-00001D 06/24

# P100-00010 - 9’6” (TL725, TL735 & TL745) & 10’4” (TL735) LEVELING CARBODY HOSE & FITTINGS (RM. TO BULKHEAD & LH TRACK MOTOR FITTINGS)

| Item | Part # | Description | Qty. |
|---|---|---|---|
| | **57458** | **KIT, FITTING - TRACK TRUNK** | 1 |
| | **57457** | **KIT, FITTING - TRACK LEVELING** | 1 |
| 1 | 55306 - (KIT) | HOSE ASSY - 387TC50 04-04OS-04OS-W - (SHIFT - RM #3 TO BULKHEAD) | 1 |
| 2 | 55306 - (KIT) | HOSE ASSY - 387TC51 06-06OS-06OS-W - (BRAKE - RM #1 TO BULKHEAD) | 1 |
| 3 | 55306 - (KIT) | HOSE ASSY - 187TC51 12-12OS-12OS-W - (FLUSH - RM #7 TO BULKHEAD) | 1 |
| 4 | 55306 - (KIT) | HOSE ASSY - 187TC58 12-12OS-12OS-W - (CASE - RM #1 TO BULKHEAD) | 1 |
| 5 | 55306 - (KIT) | HOSE ASSY - 797TC60 16-16OS-16OS-SW - (DRIVE LINE - RM #11 TO TOP RH BULKHEAD) | 1 |
| 6 | 55306 - (KIT) | HOSE ASSY - 797TC60 16-16OS-16OS-SW - (DRIVE LINE - RM #9 TO BOTTOM RH BULKHEAD) | 1 |
| 7 | 55306 - (KIT) | HOSE ASSY - 797TC62 16-16OS-16OS-SW - (DRIVE LINE - RM #12 TO TOP LH BULKHEAD) | 1 |
| 8 | 55306 - (KIT) | HOSE ASSY - 797TC60 16-16OS-16OS-SW - (DRIVE LINE - RM #10 TO BOTTOM LH BULKHEAD) | 1 |
| 9 | 54316 | ELBOW, BULKHEAD UNION 45DEG #16 | 2 |
| 10 | 60344 | PLATE, TRUNK - BH (TL) | 1 |
| 11 | 11707 | BOLT - .375” X 1” **263 RED LOCTITE™** | 2 |
| 12 | 15528 | WASHER, SAE FLAT - .375” | 2 |
| 17 | 15228 | ELBOW, 90 - FF1868T-1616S | 2 |
| 18 | 58359 | CONNECTOR,FLANGE PAD-W48-16-16U-M12 BLK | 2 |
| 19 | 1139657 | BOLT, M12-1.75 X 45MM L 10MM HEX DRIVE **(TORQUE 85FT LBS) 263 RED LOCTITE™** | 8 |
| 21 | 53157 | FITTING, CONNECTOR - #4 ORF - 14MM | 1 |
| 22 | 54795 | CONNECTOR, STR ORIFICED .04” TRACK MOTOR | 1 |
| 23 | 52900 | SWIVEL, NUT BRANCH TEE #6 | 1 |
| 24 | 15117 | CONNECTOR, STR - FF1852T-0808S | 1 |
| 25 | 53651 | FITTING, FLUSHING ORIFICE - TRACK MOTOR | 1 |
| 26 | 52439 | CONNECTOR, MALE ISO 6149 | 1 |
| 27 | 53124 | FITTING, MALE CONNECTOR ISO 6149 | 1 |
| 28 | 17688 | ELBOW, 90 - FF1868T-1212S | 2 |
| 29 | 15225 | CONNECTOR, STR - FF1852T-1616S | 4 |
| 30 | 16296 | ELBOW, 90 - FF1868T-0606S | 1 |
| 31 | 15133 | ELBOW, 90 - FF1868T-0406S | 1 |
| 32 | 53263 - (KIT) | HOSE ASSY - 797TC54.5 16-16OS-16O9-SW - (DRIVE LINE - BULKHEAD TO TOP LEFT DRIVE MOTOR) | 1 |
| 33 | 53263 - (KIT) | HOSE ASSY - 797TC48.5 16-16OS-16O9-SW - (DRIVE LINE - BULKHEAD TO BOTTOM LEFT DRIVE MOTOR) | 1 |
| 34 | 53263 - (KIT) | HOSE ASSY - 387TC78 04-04OS-04O9-W - (SHIFT - BULKHEAD TO LEFT DRIVE MOTOR) | 1 |
| 35 | 53263 - (KIT) | HOSE ASSY - 187TC93 08-08OS-08O9-W - (FLUSH - BULKHEAD TO LEFT DRIVE MOTOR) | 1 |
| 36 | 53263 - (KIT) | HOSE ASSY - 387TC80 06-06OS-06OS-W - (BRAKE - BULKHEAD TO LEFT DRIVE MOTOR) | 1 |
| 37 | 53263 - (KIT) | HOSE ASSY - 387TC22 06-06OS-06O4 - (BRAKE JUMPER - LEFT DRIVE MOTOR TO FINAL DRIVE | 1 |
| 38 | 53263 - (KIT) | HOSE ASSY - 187TC74 08-08OS-08O9-W - (CASE DRAIN - BULKHEAD TO LEFT DRIVE MOTOR) | 1 |

# P100-00020 - 9’6” (TL725, TL735 & TL745) & 10’4” (TL735) LEVELING CARBODY HOSE & FITTINGS (RM. TO BULKHEAD & RH TRACK MOTOR FITTINGS)

**NOTE: HYDRAULIC FITTINGS GET 545 LOCTITE™**

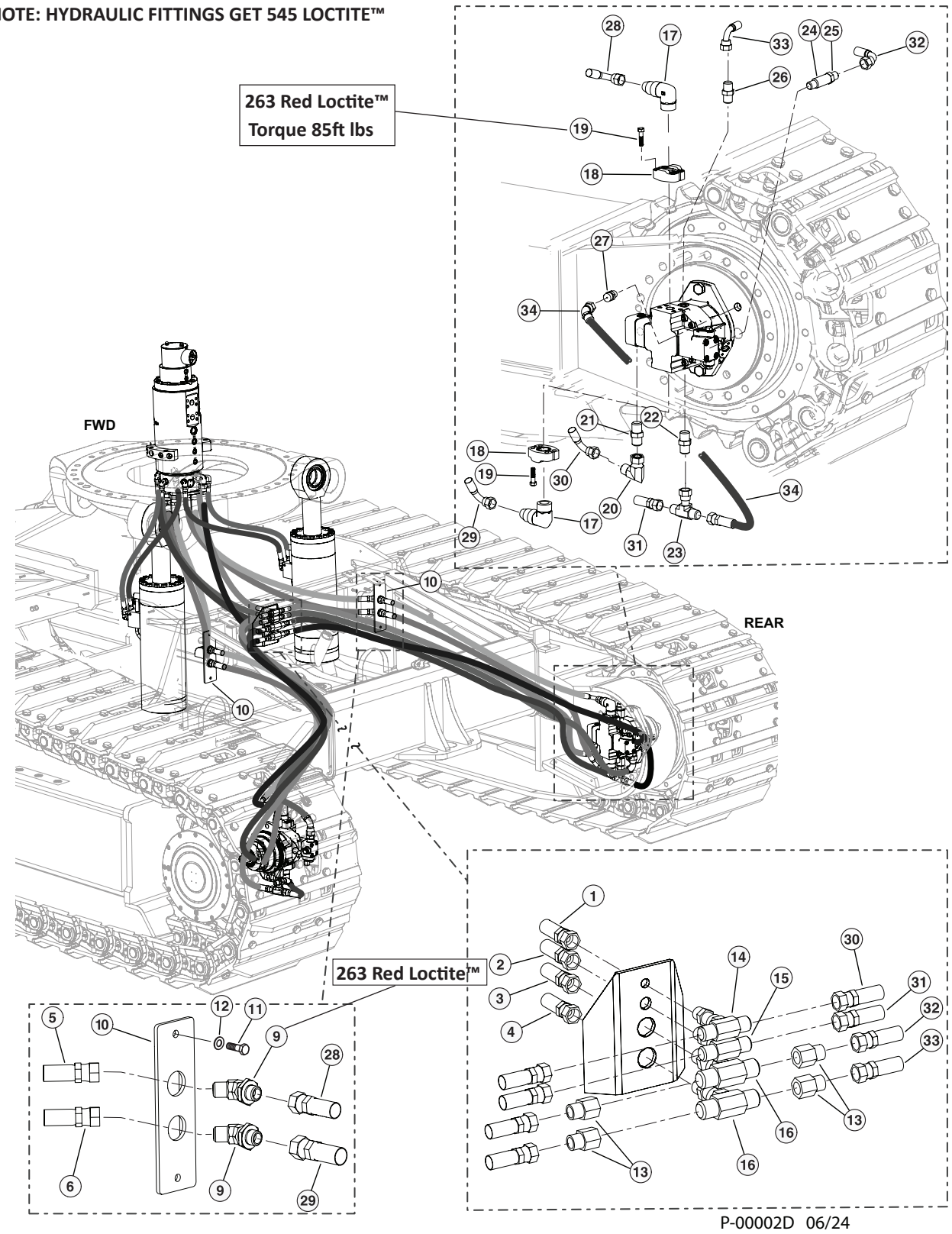


P-00002D 06/24

# P100-00020 - 9’6” (TL725, TL735 & TL745) & 10’4” (TL735) LEVELING CARBODY HOSE & FITTINGS (RM. TO BULKHEAD & RH TRACK MOTOR FITTINGS)

| Item | Part # | Description | Qty. |
|---|---|---|---|
| | **57458** | **KIT, FITTING - TRACK TRUNK** | 1 |
| | **57457** | **KIT, FITTING - TRACK LEVELING** | 1 |
| 1 | 55306 - (KIT) | HOSE ASSY - 387TC50 04-04OS-04OS-W - (SHIFT - RM #3 TO BULKHEAD) | 1 |
| 2 | 55306 - (KIT) | HOSE ASSY - 387TC51 06-06OS-06OS-W - (BRAKE - RM #1 TO BULKHEAD) | 1 |
| 3 | 55306 - (KIT) | HOSE ASSY - 187TC51 12-12OS-12OS-W - (FLUSH - RM #7 TO BULKHEAD) | 1 |
| 4 | 55306 - (KIT) | HOSE ASSY - 187TC58 12-12OS-12OS-W - (CASE - RM #1 TO BULKHEAD) | 1 |
| 5 | 55306 - (KIT) | HOSE ASSY - 797TC60 16-16OS-16OS-SW - (DRIVE LINE - RM #11 TO TOP RH BULKHEAD) | 1 |
| 6 | 55306 - (KIT) | HOSE ASSY - 797TC60 16-16OS-16OS-SW - (DRIVE LINE - RM #9 TO BOTTOM RH BULKHEAD) | 1 |
| 9 | 54316 | ELBOW, BULKHEAD UNION 45DEG #16 | 2 |
| 10 | 60344 | PLATE, TRUNK - BH (TL) | 1 |
| 11 | 11707 | BOLT - .375” X 1” **263 RED LOCTITE™** | 2 |
| 12 | 15528 | WASHER, SAE FLAT - .375” | 2 |
| 13 | 18581 | CONNECTOR, REDUCER - ORS FF2281T-0812S | 4 |
| 14 | 52901 | TEE, BULKHEAD BRANCH - 4 | 1 |
| 15 | 52902 | TEE, BULKHEAD BRANCH - 6 | 1 |
| 16 | 53192 | FITTING, BULKHEAD BRANCH TEE- 12 WJLO-WL | 2 |
| 17 | 15228 | ELBOW, 90 - FF1868T-1616S | 4 |
| 18 | 58359 | CONNECTOR,FLANGE PAD-W48-16-16U-M12 BLK | 4 |
| 19 | 1139657 | BOLT, M12-1.75 X 45MM L 10MM HEX DRIVE **(TORQUE 85FT LBS) 263 RED LOCTITE™** | 8 |
| 20 | 15145 | ELBOW, 90 SWIVEL - FF2098T-0404S | 2 |
| 21 | 53157 | FITTING, CONNECTOR - #4 ORF - 14MM | 2 |
| 22 | 54795 | CONNECTOR, STR ORIFICED .04” TRACK MOTOR | 2 |
| 23 | 52900 | SWIVEL, NUT BRANCH TEE #6 | 2 |
| 24 | 53651 | FITTING, FLUSHING ORIFICE - TRACK MOTOR | 2 |
| 25 | 15117 | CONNECTOR, STR - FF1852T-0808S | 2 |
| 26 | 52439 | CONNECTOR, MALE ISO 6149 | 2 |
| 27 | 53124 | FITTING, MALE CONNECTOR ISO 6149 | 2 |
| 28 | 53263 - (KIT) | HOSE ASSY - 797TC54.5 16-16OS-16O9-SW - (DRIVE LINE - BULKHEAD TO TOP RIGHT DRIVE MOTOR) | 1 |
| 29 | 53263 - (KIT) | HOSE ASSY - 797TC48.5 16-16OS-16O9-SW - (DRIVE LINE - BULKHEAD TO BOTTOM RIGHT DRIVE MOTOR) | 1 |
| 30 | 53263 - (KIT) | HOSE ASSY - 387TC78 04-04OS-04O9-W - (SHIFT - BULKHEAD TO RIGHT DRIVE MOTOR) | 1 |
| 31 | 53263 - (KIT) | HOSE ASSY - 387TC80 06-06OS-06OS-W - (BRAKE - BULKHEAD TO RIGHT DRIVE MOTOR) | 1 |
| 32 | 53263 - (KIT) | HOSE ASSY - 187TC93 08-08OS-08O9-W - (FLUSH - BULKHEAD TO RIGHT DRIVE MOTOR) | 1 |
| 33 | 53263 - (KIT) | HOSE ASSY - 187TC74 08-08OS-08O9-W - (CASE DRAIN - BULKHEAD TO RIGHT DRIVE MOTOR) | 1 |
| 34 | 53263 - (KIT) | HOSE ASSY - 387TC22 06-06OS-06O4 - (BRAKE JUMPER - RIGHT DRIVE MOTOR TO FINAL DRIVE | 1 |

# P100-00030 - 9’6” (TL725, TL735 & TL745) & 10’4” (TL735) CARBODY CAB LEVELING HYD. HOSE LOWER CONNECTIONS - ROTARY MAINFOLD TO CYLINDERS

**NOTE: HYDRAULIC FITTINGS GET 545 LOCTITE™**

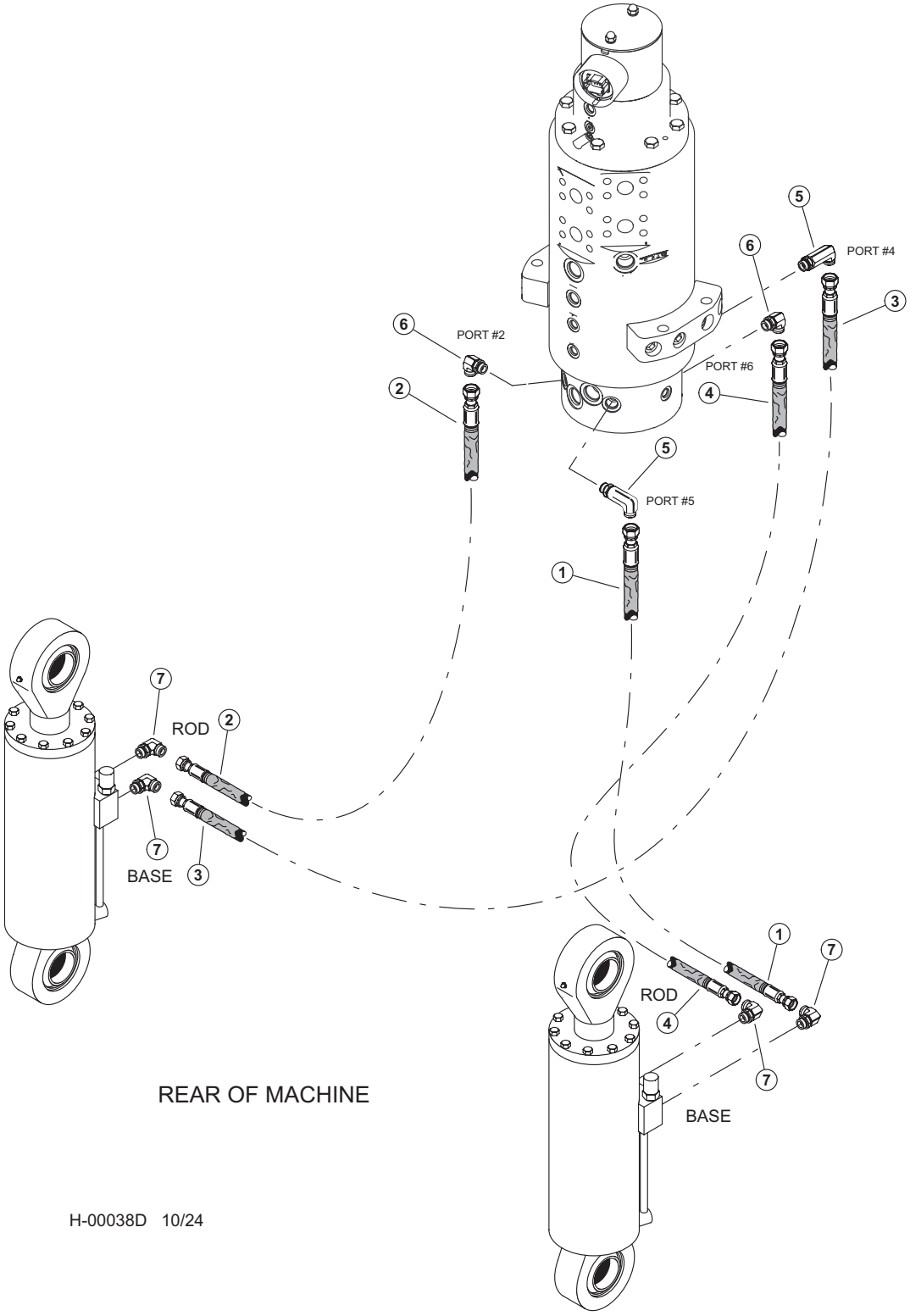


H-00038D 10/24

# P100-00030 - 9’6” (TL725, TL735 & TL745) & 10’4” (TL735) CARBODY CAB LEVELING HYD. HOSE LOWER CONNECTIONS - ROTARY MAINFOLD TO CYLINDERS

| Item | Part # | Description | Qty. |
|---|---|---|---|
| | **57457** | **KIT, FITTING - TRACK LEVELING** | 1 |
| | **57947** | **KIT, FITTING TRACK LEVEL** | 1 |
| 1 | 55306 - (KIT) | HOSE ASSY - 787TC54 08-08OS-080s - (RM #5 TO RH CYL ROD) | 1 |
| 2 | 55306 - (KIT) | HOSE ASSY - 787TC42 08-08OS-080s - (RM #2 TO RH CYL BASE) | 1 |
| 3 | 55306 - (KIT) | HOSE ASSY - 787TC54 08-08OS-080s - (RM #4 TO LH CYL ROD) | 1 |
| 4 | 55306 - (KIT) | HOSE ASSY - 787TC43 08-08OS-080s - (RM #6 TO LH CYL BASE) | 1 |
| 5 | 57445 | FITTING, 8 CC5OLO-S | 2 |
| 6 | 16360 | ELBOW, 90 - FF1868T-0808S | 1 |
| 7 | 15154 | ELBOW, 90 - FF1868T-0810S | 4 |

# P100-00040 - 9’6” (TL725, TL735 & TL745) & 10’4” (TL735) LEVELING CARBODY HOSE & FITTINGS - (FUEL SYSTEM)

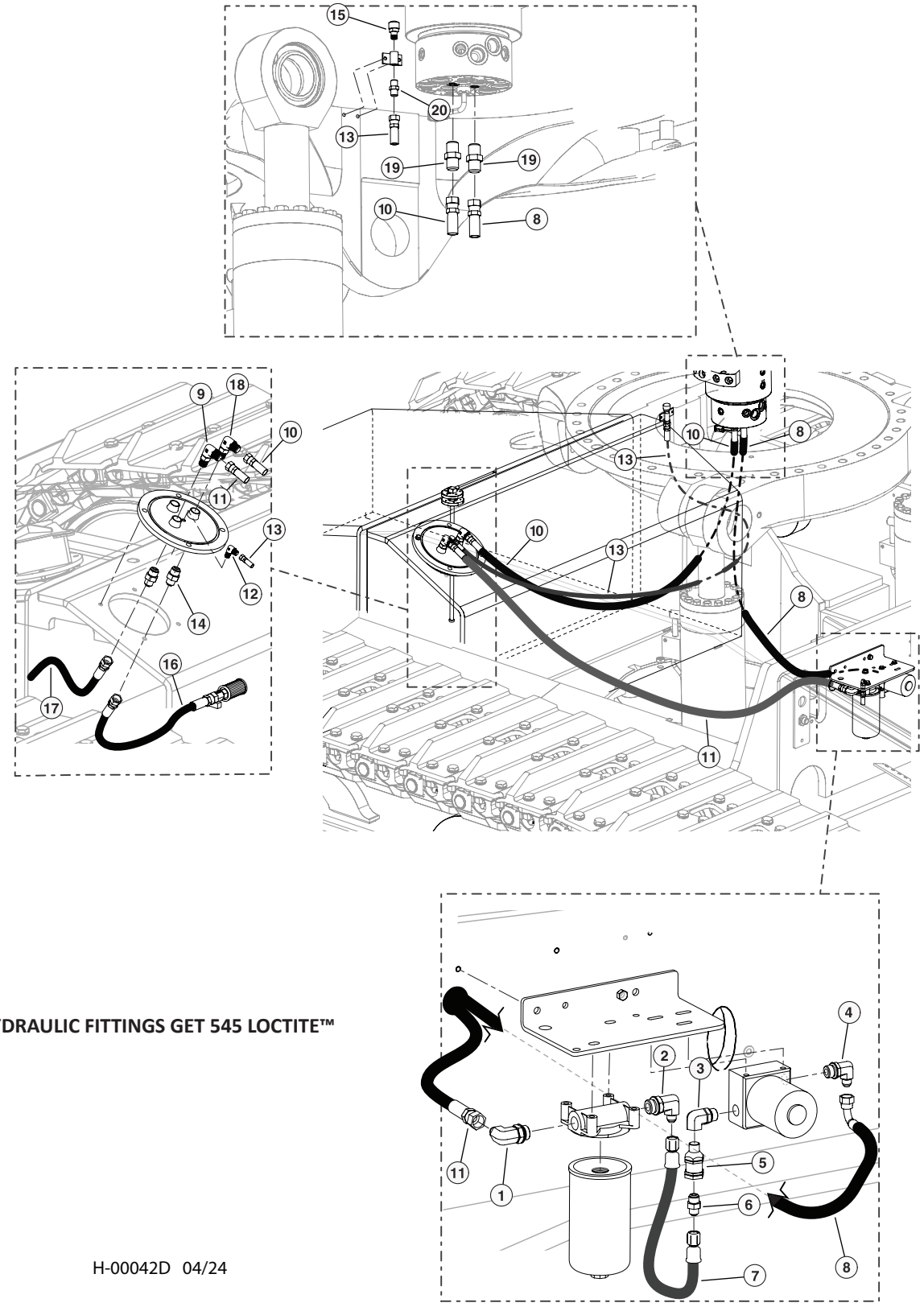


**NOTE: HYDRAULIC FITTINGS GET 545 LOCTITE™**

H-00042D 04/24

# P100-00040 - 9’6” (TL725, TL735 & TL745) & 10’4” (TL735) LEVELING CARBODY HOSE & FITTINGS - (FUEL SYSTEM)

| Item | Part # | Description | Qty. |
|---|---|---|---|
| | 57457 | KIT, FITTING - TRACK LEVELING | 1 |
| 1 | 18109 | ELBOW, 90 - 6801-8-10 | 1 |
| 2 | 53073 | ELBOW, 90 6-JIC X 10-ORB) | 1 |
| 3 | 57824 | FITTING, ELBOW FEMALE - RAPTOR FUEL PUMP | 1 |
| 4 | 15480 | ELBOW, 90 - 6801-6 | 1 |
| 5 | 15652 | VALVE, CHECK - HYDRAULIC/FUEL | 1 |
| 6 | 16009 | FITTING, 6 FTX-S PIPE-JIC | 1 |
| 7 | 58064 | HOSE, FUEL RAPTOR PUMP TRACK | 1 |
| 8 | 55306 - (KIT) | HOSE ASSY - 221FR70 06-06JS-06J9-W - (FUEL PUMP OUT TO RM. FS) | 1 |
| 9 | 15481 | ELBOW, 90 - 6801-8 | 1 |
| 10 | 55306 - (KIT) | HOSE ASSY - 221FR78 06-06JS-06JS-W - (RM. FR TO FUEL TANK - RETURN) | 1 |
| 11 | 55306 - (KIT) | HOSE ASSY - 221FR70 08-08JS-08JS-W - (FUEL SUPPLY TO FILTER IN) | 1 |
| 12 | 15505 | ELBOW, 90 4-4 CLO-S | 1 |
| 13 | 55306 - (KIT) | HOSE ASSY - 387TC75 04-04OS-04OS-W - (FUEL VENT) | 1 |
| 14 | 15117 | CONNECTOR, STR - FF1852T-0808S | 2 |
| 15 | 54170 | VENT, FUEL TANK | 1 |
| 16 | 55306 - (KIT) | HOSE ASSY - 187TC42 08-08OS-08MP - (FUEL PICKUP - IN TANK) | 1 |
| 17 | 55306 - (KIT) | HOSE ASSY - 187TC20 08-08OS-OPEN - (FUEL RETURN - IN TANK) | 1 |
| 18 | 53145 | FITTING, 6-8 C50X-S - JIC | 1 |
| 19 | 53887 | FITTING, FUEL - ROTARY MANIFOLD #6 JIC | 2 |
| 20 | 15131 | CONNECTOR, STR - FF2031T-0404S | 1 |

# P100-00050 - 9’6” (TL725, TL735 & TL745) & 10’4” (TL735) LEVELING CARBODY HOSE & FITTINGS - (LEVELING CYLINDER BASE & RM GREASE

**NOTE: HYDRAULIC FITTINGS GET 545 LOCTITE™**

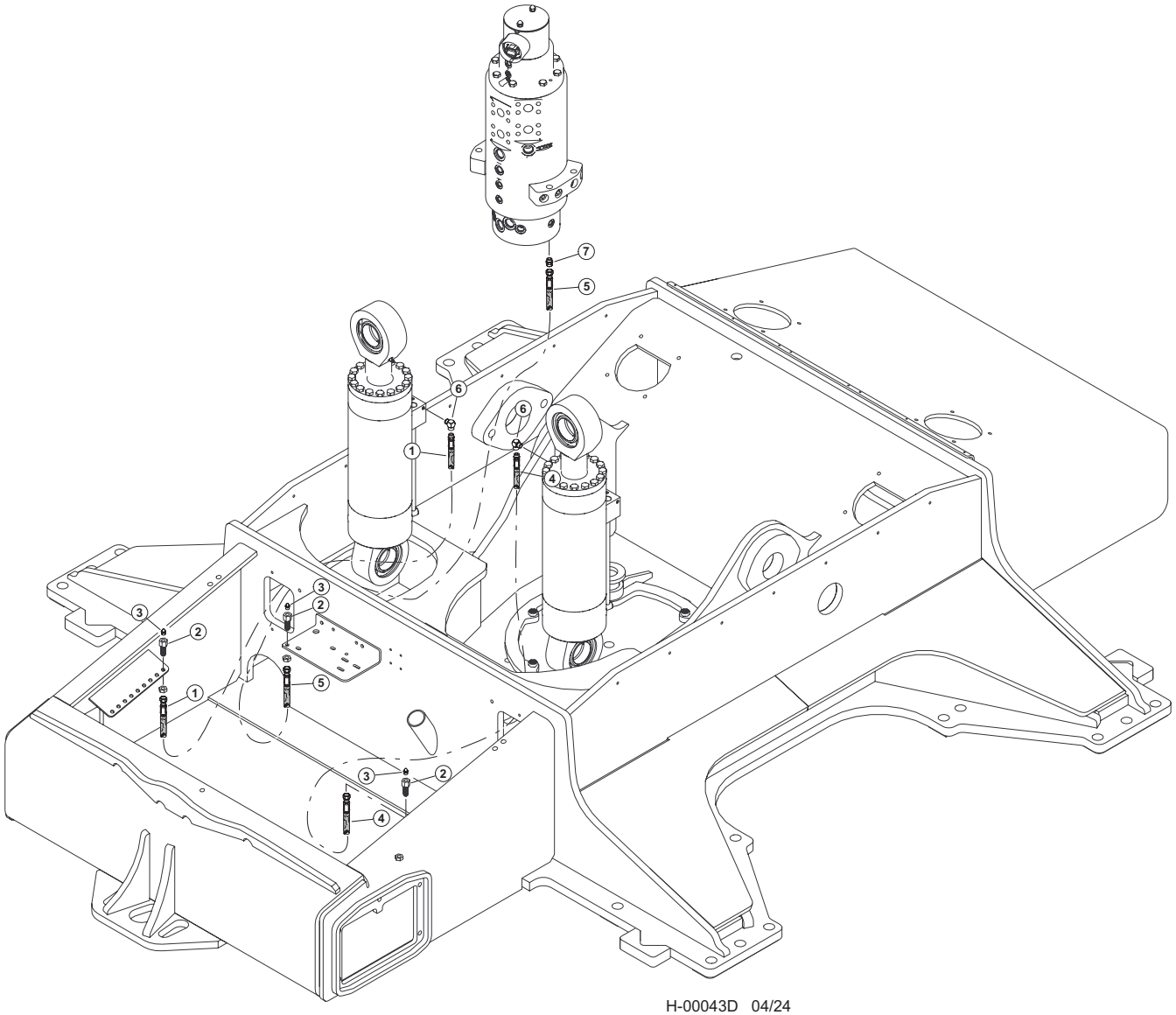


H-00043D 04/24

# P100-00050 - 9’6” (TL725, TL735 & TL745) & 10’4” (TL735) LEVELING CARBODY HOSE & FITTINGS - (LEVELING CYLINDER BASE & RM GREASE

| Item | Part # | Description | Qty. |
|---|---|---|---|
| | **57457** | **KIT, FITTING - TRACK LEVELING** | 1 |
| 1 | 55306 - (KIT) | HOSE ASSY - HLBD72 02-02PS-04JS-W - (LEVEL - LEFT GREASE LINE) | 1 |
| 2 | 15658 | CONNECTOR, STR BULKHEAD - 2239-2-4S | 2 |
| 3 | 10704 | FITTING, GREASE - .125 NPT - STR | 2 |
| 4 | 55306 - (KIT) | HOSE ASSY - HLBD72 02-02PS-04JS-W - (LEVEL - RIGHT GREASE LINE) | 1 |
| 5 | 55306 - (KIT) | HOSE ASSY - HLBD76 02-04JS-04JS-W - (ROTARY MANIFOLD GREASE LINE) | 1 |
| 6 | 22281 | ELBOW, 1/8-27 NPTF(M), 1/8-17 NPTF(F),90 | 2 |
| 7 | 51887 | CONNECTOR, STR - (4F50X-S) | 1 |

# P100-00060 - 9’6” (TL725, TL735 & TL745) & 10’4” (TL735) LVL CARBODY GREASE LINES & FITTINGS

**NOTE: HYDRAULIC FITTINGS GET 545 LOCTITE™**

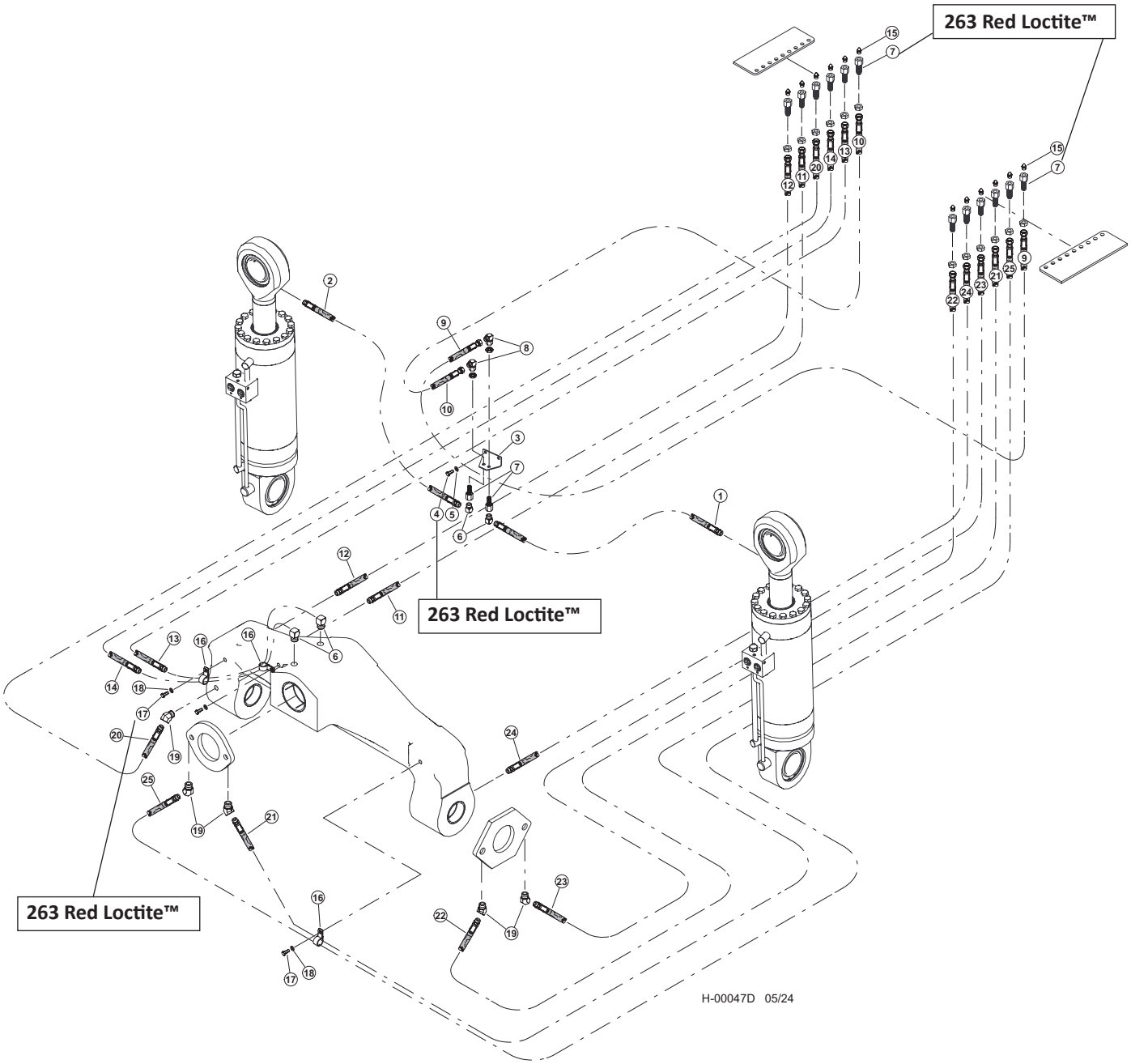

# P100-00060 - 9’6” (TL725, TL735 & TL745) & 10’4” (TL735) LVL CARBODY GREASE LINES & FITTINGS

| Item | Part # | Description | Qty. |
|---|---|---|---|
| | **57457** | **KIT, FITTING - TRACK LEVELING** | 1 |
| 1 | 53262 - (KIT) | HOSE ASSY - HLBD22 02-02SP-02SP-W - (LH CYL. ROD GREASE LINE) | 1 |
| 2 | 53262 - (KIT) | HOSE ASSY - HLBD22 02-02SP-02SP-W - (RH CYL. ROD GREASE LINE) | 1 |
| 3 | 47308 | BRACKET, GREASE LINE - LEVELING | 1 |
| 4 | 15576 | BOLT - .25” X 1” **263 RED LOCTITE™** | 2 |
| 5 | 10800 | WASHER, FLAT - .25” | 2 |
| 6 | 22281 | ELBOW, 1/8-27 NPTF(M), 1/8-17 NPTF(F),90 | 4 |
| 7 | 15658 | CONNECTOR, STR BULKHEAD - 2239-2-4S **263 RED LOCTITE™** | 14 |
| 8 | 17023 | ELBOW, 90 SWIVEL - 6500-4 | 2 |
| 9 | 53262 - (KIT) | HOSE ASSY - HLBD112 02-04JS-04JS-W - (LH CYL. BULKHEAD TO BULKHEAD GREASE LINE) | 1 |
| 10 | 53262 - (KIT) | HOSE ASSY - HLBD112 02-04JS-04JS-W - (RH CYL. BULKHEAD TO BULKHEAD GREASE LINE) | 1 |
| 11 | 53262 - (KIT) | HOSE ASSY - HLBD74 02-02PS-04JS-W-125 - (BULKHEAD TO LEVELER - RH REAR INNER) | 1 |
| 12 | 53262 - (KIT) | HOSE ASSY - HLBD75 02-02PS-04JS - (BULKHEAD TO LEVELER - RH REAR OUTER) | 1 |
| 13 | 53262 - (KIT) | HOSE ASSY - HLBD132 02-02SP-04JS-W - (BULKHEAD TO LEVELER - TOP REAR) | 1 |
| 14 | 53262 - (KIT) | HOSE ASSY - HLBD136 02-02SP-04JS - (BULKHEAD TO LEVELER - TOP FRONT) | 1 |
| 15 | 10704 | FITTING, GREASE - .125 NPT - STR | 12 |
| 16 | 17536 | CLAMP, HOSE - COATED STRAP - .75” | 3 |
| 17 | 15604 | BOLT - .25” X .75” **263 RED LOCTITE™** | 3 |
| 18 | 10757 | WASHER, SAE FLAT - .25” | 3 |
| 19 | 21671 | ELBOW, 45 - 5546134 | 4 |
| 20 | 53262 - (KIT) | HOSE ASSY - HLBD89 02-02PS-04JS - (BULKHEAD TO LEVELER - RH FRONT) | 1 |
| 21 | 53262 - (KIT) | HOSE ASSY - HLBD131 02-02PS-04JS-W - (BULKHEAD TO FRONT LH SLACK ADJUSTER) | 1 |
| 22 | 53262 - (KIT) | HOSE ASSY - HLBD82 02-02PS-04JS - (BULKHEAD TO LH SIDE SLACK ADJUSTER FRONT) | 1 |
| 23 | 53262 - (KIT) | HOSE ASSY - HLBD75 02-02PS-04JS-W125 - (BULKHEAD TO LH SIDE SLACK ADJUSTER REAR) | 1 |
| 24 | 53262 - (KIT) | HOSE ASSY - HLBD79 02-02PS-04JS - (BULKHEAD TO LEVELER - LH REAR) | 1 |
| 25 | 53262 - (KIT) | HOSE ASSY - HLBD134 02-02PS-04JS - (BULKHEAD TO FRONT RH SLACK ADJUSTER) | 1 |

# P100-00070 - 10’4” (TL725, TL745) 11’0” (TL735) LEVELING CARBODY HOSE & FITTINGS (RM. TO BULKHEAD & LH TRACK MOTOR FITTINGS)

**NOTE: HYDRAULIC FITTINGS GET 545 LOCTITE™**

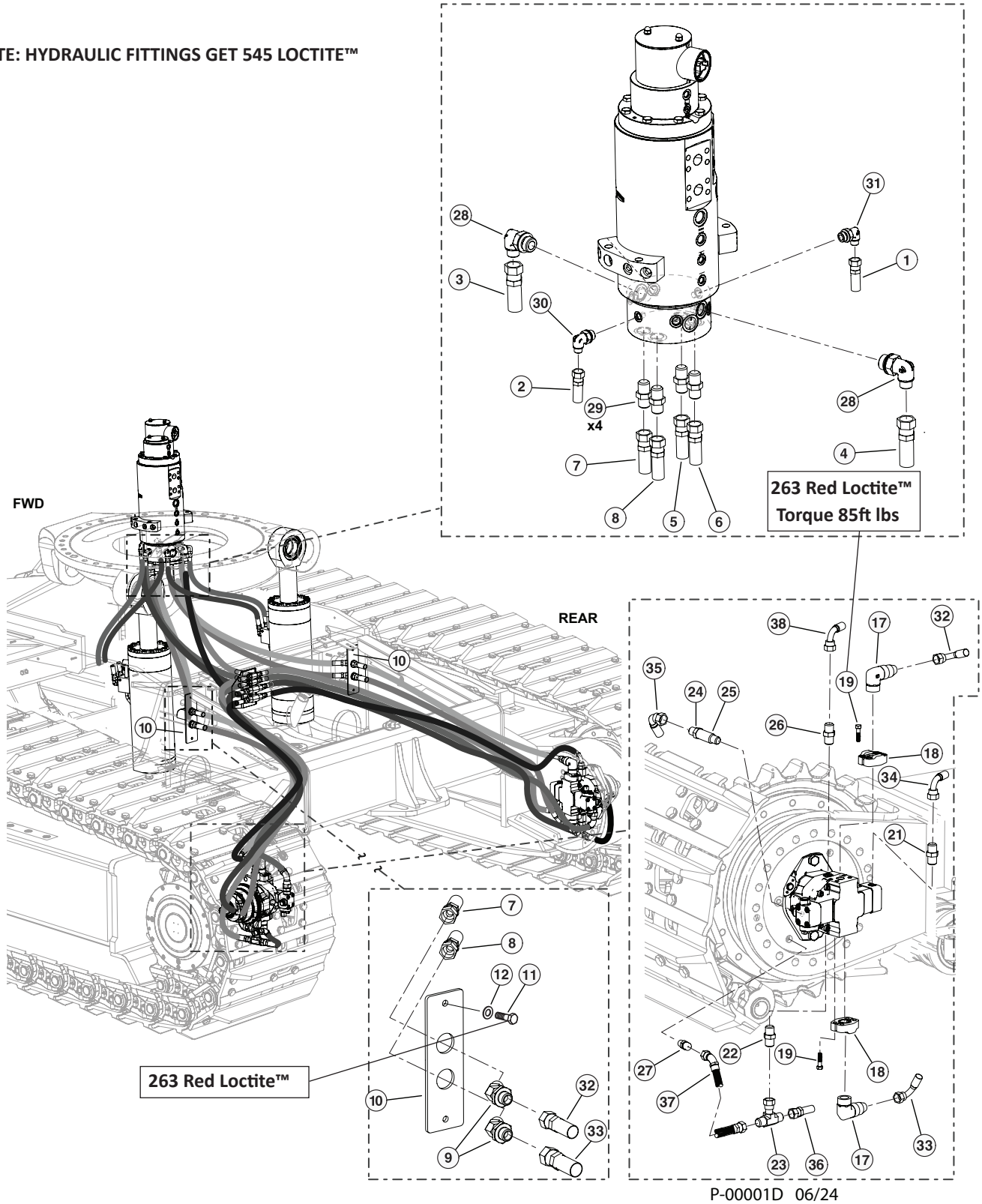


P-00001D 06/24

# P100-00070 - 10’4” (TL725, TL745) 11’0” (TL735) LEVELING CARBODY HOSE & FITTINGS (RM. TO BULKHEAD & LH TRACK MOTOR FITTINGS)

| Item | Part # | Description | Qty. |
|---|---|---|---|
| | **57458** | **KIT, FITTING - TRACK TRUNK** | 1 |
| | **57457** | **KIT, FITTING - TRACK LEVELING** | 1 |
| 1 | 55306 - (KIT) | HOSE ASSY - 387TC50 04-04OS-04OS-W - (SHIFT - RM #3 TO BULKHEAD) | 1 |
| 2 | 55306 - (KIT) | HOSE ASSY - 387TC51 06-06OS-06OS-W - (BRAKE - RM #1 TO BULKHEAD) | 1 |
| 3 | 55306 - (KIT) | HOSE ASSY - 187TC51 12-12OS-12OS-W - (FLUSH - RM #7 TO BULKHEAD) | 1 |
| 4 | 55306 - (KIT) | HOSE ASSY - 187TC58 12-12OS-12OS-W - (CASE - RM #1 TO BULKHEAD) | 1 |
| 5 | 55306 - (KIT) | HOSE ASSY - 797TC60 16-16OS-16OS-SW - (DRIVE LINE - RM #11 TO TOP RH BULKHEAD) | 1 |
| 6 | 55306 - (KIT) | HOSE ASSY - 797TC60 16-16OS-16OS-SW - (DRIVE LINE - RM #9 TO BOTTOM RH BULKHEAD) | 1 |
| 7 | 55306 - (KIT) | HOSE ASSY - 797TC62 16-16OS-16OS-SW - (DRIVE LINE - RM #12 TO TOP LH BULKHEAD) | 1 |
| 8 | 55306 - (KIT) | HOSE ASSY - 797TC60 16-16OS-16OS-SW - (DRIVE LINE - RM #10 TO BOTTOM LH BULKHEAD) | 1 |
| 9 | 54316 | ELBOW, BULKHEAD UNION 45DEG #16 | 2 |
| 10 | 60344 | PLATE, TRUNK - BH (TL) | 1 |
| 11 | 11707 | BOLT - .375” X 1” **263 RED LOCTITE™** | 2 |
| 12 | 15528 | WASHER, SAE FLAT - .375” | 2 |
| 17 | 15228 | ELBOW, 90 - FF1868T-1616S | 2 |
| 18 | 58359 | CONNECTOR,FLANGE PAD-W48-16-16U-M12 BLK | 2 |
| 19 | 1139657 | BOLT, M12-1.75 X 45MM L 10MM HEX DRIVE **(TORQUE 85FT LBS) 263 RED LOCTITE™** | 8 |
| 21 | 53157 | FITTING, CONNECTOR - #4 ORF - 14MM | 1 |
| 22 | 54795 | CONNECTOR, STR ORIFICED .04” TRACK MOTOR | 1 |
| 23 | 52900 | SWIVEL, NUT BRANCH TEE #6 | 1 |
| 24 | 15117 | CONNECTOR, STR - FF1852T-0808S | 1 |
| 25 | 53651 | FITTING, FLUSHING ORIFICE - TRACK MOTOR | 1 |
| 26 | 52439 | CONNECTOR, MALE ISO 6149 | 1 |
| 27 | 53124 | FITTING, MALE CONNECTOR ISO 6149 | 1 |
| 28 | 17688 | ELBOW, 90 - FF1868T-1212S | 2 |
| 29 | 15225 | CONNECTOR, STR - FF1852T-1616S | 4 |
| 30 | 16296 | ELBOW, 90 - FF1868T-0606S | 1 |
| 31 | 15133 | ELBOW, 90 - FF1868T-0406S | 1 |
| 32 | 53237 - (KIT) | HOSE ASSY - 797TC54.5 16-16OS-16O9-SW - (DRIVE LINE - BULKHEAD TO TOP LEFT DRIVE MOTOR) | 1 |
| 33 | 53237 - (KIT) | HOSE ASSY - 797TC62 16-16OS-16O9-SW - (DRIVE LINE - BULKHEAD TO BOTTOM LEFT DRIVE MOTOR) | 1 |
| 34 | 53237 - (KIT) | HOSE ASSY - 387TC80 04-04OS-04O9-W - (SHIFT - BULKHEAD TO LEFT DRIVE MOTOR) | 1 |
| 35 | 53237 - (KIT) | HOSE ASSY - 187TC96 08-08OS-08O9-W - (FLUSH - BULKHEAD TO LEFT DRIVE MOTOR) | 1 |
| 36 | 53237 - (KIT) | HOSE ASSY - 387TC90 06-06OS-06OS-W - (BRAKE - BULKHEAD TO LEFT DRIVE MOTOR) | 1 |
| 37 | 53237 - (KIT) | HOSE ASSY - 387TC22 06-06OS-06O4 - (BRAKE JUMPER - LEFT DRIVE MOTOR TO FINAL DRIVE | 1 |
| 38 | 53237 - (KIT) | HOSE ASSY - 187TC80 08-08OS-08O9-W - (CASE DRAIN - BULKHEAD TO LEFT DRIVE MOTOR) | 1 |

# P100-00080 - 10’4” (TL725, TL745) 11’0” (TL735) LEVELING CARBODY HOSE & FITTINGS (RM. TO BULKHEAD & RH TRACK MOTOR FITTINGS)

**NOTE: HYDRAULIC FITTINGS GET 545 LOCTITE™**

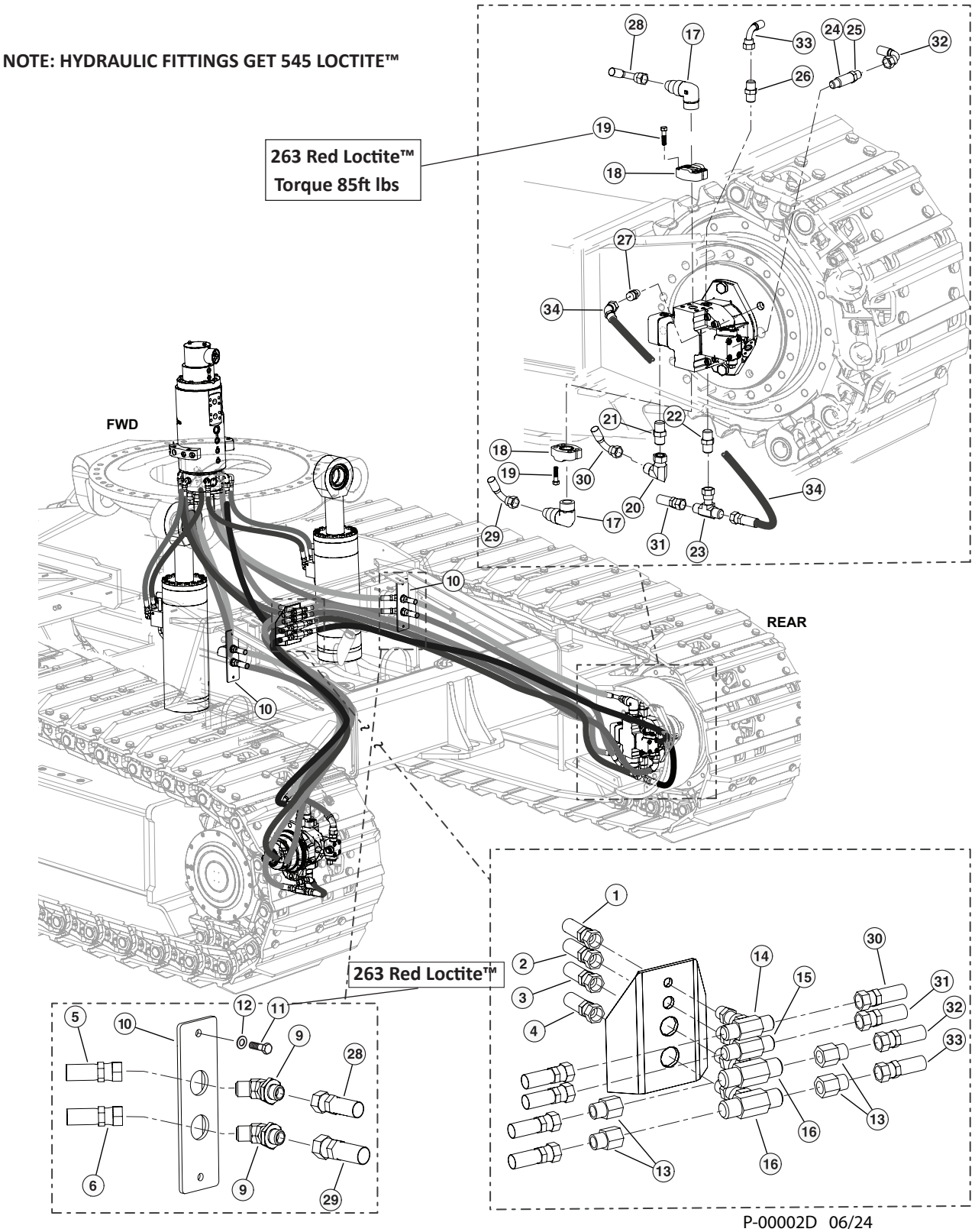


P-00002D 06/24

# P100-00080 - 10’4” (TL725, TL745) 11’0” (TL735) LEVELING CARBODY HOSE & FITTINGS (RM. TO BULKHEAD & RH TRACK MOTOR FITTINGS)

| Item | Part # | Description | Qty. |
|---|---|---|---|
| | **57458** | **KIT, FITTING - TRACK TRUNK** | 1 |
| | **57457** | **KIT, FITTING - TRACK LEVELING** | 1 |
| 1 | 55306 - (KIT) | HOSE ASSY - 387TC50 04-04OS-04OS-W - (SHIFT - RM #3 TO BULKHEAD) | 1 |
| 2 | 55306 - (KIT) | HOSE ASSY - 387TC51 06-06OS-06OS-W - (BRAKE - RM #1 TO BULKHEAD) | 1 |
| 3 | 55306 - (KIT) | HOSE ASSY - 187TC51 12-12OS-12OS-W - (FLUSH - RM #7 TO BULKHEAD) | 1 |
| 4 | 55306 - (KIT) | HOSE ASSY - 187TC58 12-12OS-12OS-W - (CASE - RM #1 TO BULKHEAD) | 1 |
| 5 | 55306 - (KIT) | HOSE ASSY - 797TC60 16-16OS-16OS-SW - (DRIVE LINE - RM #11 TO TOP RH BULKHEAD) | 1 |
| 6 | 55306 - (KIT) | HOSE ASSY - 797TC60 16-16OS-16OS-SW - (DRIVE LINE - RM #9 TO BOTTOM RH BULKHEAD) | 1 |
| 9 | 54316 | ELBOW, BULKHEAD UNION 45DEG #16 | 2 |
| 10 | 60344 | PLATE, TRUNK - BH (TL) | 1 |
| 11 | 11707 | BOLT - .375” X 1” **263 RED LOCTITE™** | 2 |
| 12 | 15528 | WASHER, SAE FLAT - .375” | 2 |
| 13 | 18581 | CONNECTOR, REDUCER - ORS FF2281T-0812S | 4 |
| 14 | 52901 | TEE, BULKHEAD BRANCH - 4 | 1 |
| 15 | 52902 | TEE, BULKHEAD BRANCH - 6 | 1 |
| 16 | 53192 | FITTING, BULKHEAD BRANCH TEE- 12 WJLO-WL | 2 |
| 17 | 15228 | ELBOW, 90 - FF1868T-1616S | 4 |
| 18 | 58359 | CONNECTOR,FLANGE PAD-W48-16-16U-M12 BLK | 4 |
| 19 | 1139657 | BOLT, M12-1.75 X 45MM L 10MM HEX DRIVE **(TORQUE 85FT LBS) 263 RED LOCTITE** | 8 |
| 20 | 15145 | ELBOW, 90 SWIVEL - FF2098T-0404S | 2 |
| 21 | 53157 | FITTING, CONNECTOR - #4 ORF - 14MM | 2 |
| 22 | 54795 | CONNECTOR, STR ORIFICED .04” TRACK MOTOR | 2 |
| 23 | 52900 | SWIVEL, NUT BRANCH TEE #6 | 2 |
| 24 | 53651 | FITTING, FLUSHING ORIFICE - TRACK MOTOR | 2 |
| 25 | 15117 | CONNECTOR, STR - FF1852T-0808S | 2 |
| 26 | 52439 | CONNECTOR, MALE ISO 6149 | 2 |
| 27 | 53124 | FITTING, MALE CONNECTOR ISO 6149 | 2 |
| 28 | 53237 - (KIT) | HOSE ASSY - 797TC54.5 16-16OS-16O9-SW - (DRIVE LINE - BULKHEAD TO TOP RIGHT DRIVE MOTOR) | 1 |
| 29 | 53237 - (KIT) | HOSE ASSY - 797TC62 16-16OS-16O9-SW - (DRIVE LINE - BULKHEAD TO BOTTOM RIGHT DRIVE MOTOR) | 1 |
| 30 | 53237 - (KIT) | HOSE ASSY - 387TC80 04-04OS-04O9-W - (SHIFT - BULKHEAD TO RIGHT DRIVE MOTOR) | 1 |
| 31 | 53237 - (KIT) | HOSE ASSY - 387TC90 06-06OS-06OS-W - (BRAKE - BULKHEAD TO RIGHT DRIVE MOTOR) | 1 |
| 32 | 53237 - (KIT) | HOSE ASSY - 187TC96 08-08OS-08O9-W - (FLUSH - BULKHEAD TO RIGHT DRIVE MOTOR) | 1 |
| 33 | 53237 - (KIT) | HOSE ASSY - 187TC80 08-08OS-08O9-W - (CASE DRAIN - BULKHEAD TO RIGHT DRIVE MOTOR) | 1 |
| 34 | 53237 - (KIT) | HOSE ASSY - 387TC22 06-06OS-06O4 - (BRAKE JUMPER - RIGHT DRIVE MOTOR TO FINAL DRIVE | 1 |

# P100-00090 - 10’4” (TL725, TL745) 11’0” (TL735) CARBODY CAB LEVELING HYD. HOSE LOWER CONNECTIONS - ROTARY MAINFOLD TO CYLINDERS

**NOTE: HYDRAULIC FITTINGS GET 545 LOCTITE™**

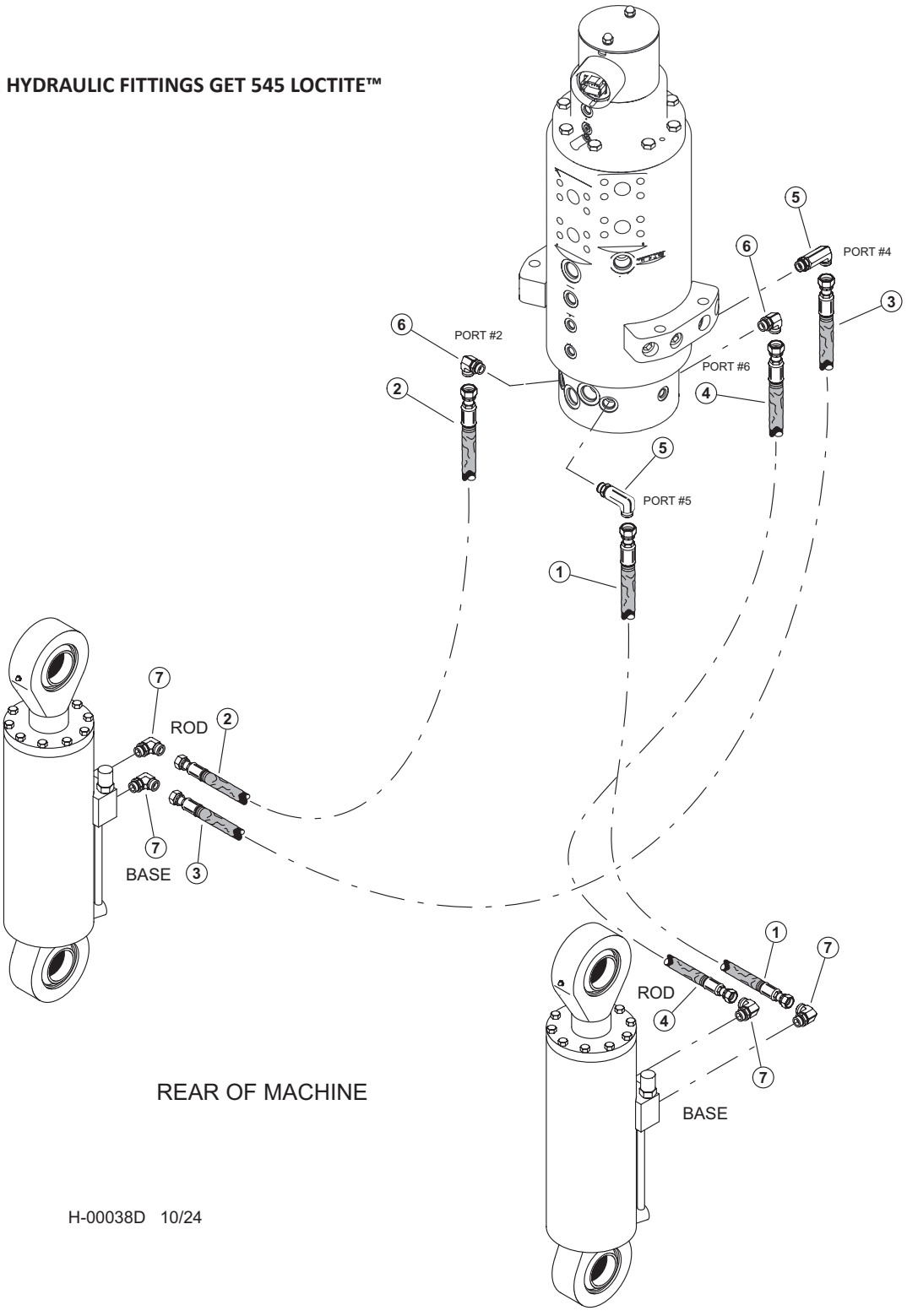


H-00038D 10/24

# P100-00090 - 10’4” (TL725, TL745)  11’0” (TL735) CARBODY CAB LEVELING HYD. HOSE LOWER CONNECTIONS - ROTARY MAINFOLD TO CYLINDERS

| Item | Part # | Description | Qty. |
|---|---|---|---|
| | **57457** | **KIT, FITTING - TRACK LEVELING** | 1 |
| | **57947** | **KIT, FITTING TRACK LEVEL** | 1 |
| 1 | 55306 - (KIT) | HOSE ASSY - 787TC54 08-08OS-080s - (RM #5 TO RH CYL ROD) | 1 |
| 2 | 55306 - (KIT) | HOSE ASSY - 787TC42 08-08OS-080s - (RM #2 TO RH CYL BASE) | 1 |
| 3 | 55306 - (KIT) | HOSE ASSY - 787TC54 08-08OS-080s - (RM #4 TO LH CYL ROD) | 1 |
| 4 | 55306 - (KIT) | HOSE ASSY - 787TC43 08-08OS-080s - (RM #6 TO LH CYL BASE) | 1 |
| 5 | 57445 | FITTING, 8 CC5OLO-S | 2 |
| 6 | 16360 | ELBOW, 90 - FF1868T-0808S | 1 |
| 7 | 15154 | ELBOW, 90 - FF1868T-0810S | 4 |

# P100-00100 - 10’4” (TL725, TL745) 11’0” (TL735) LEVELING CARBODY HOSE & FITTINGS (FUEL SYSTEM)

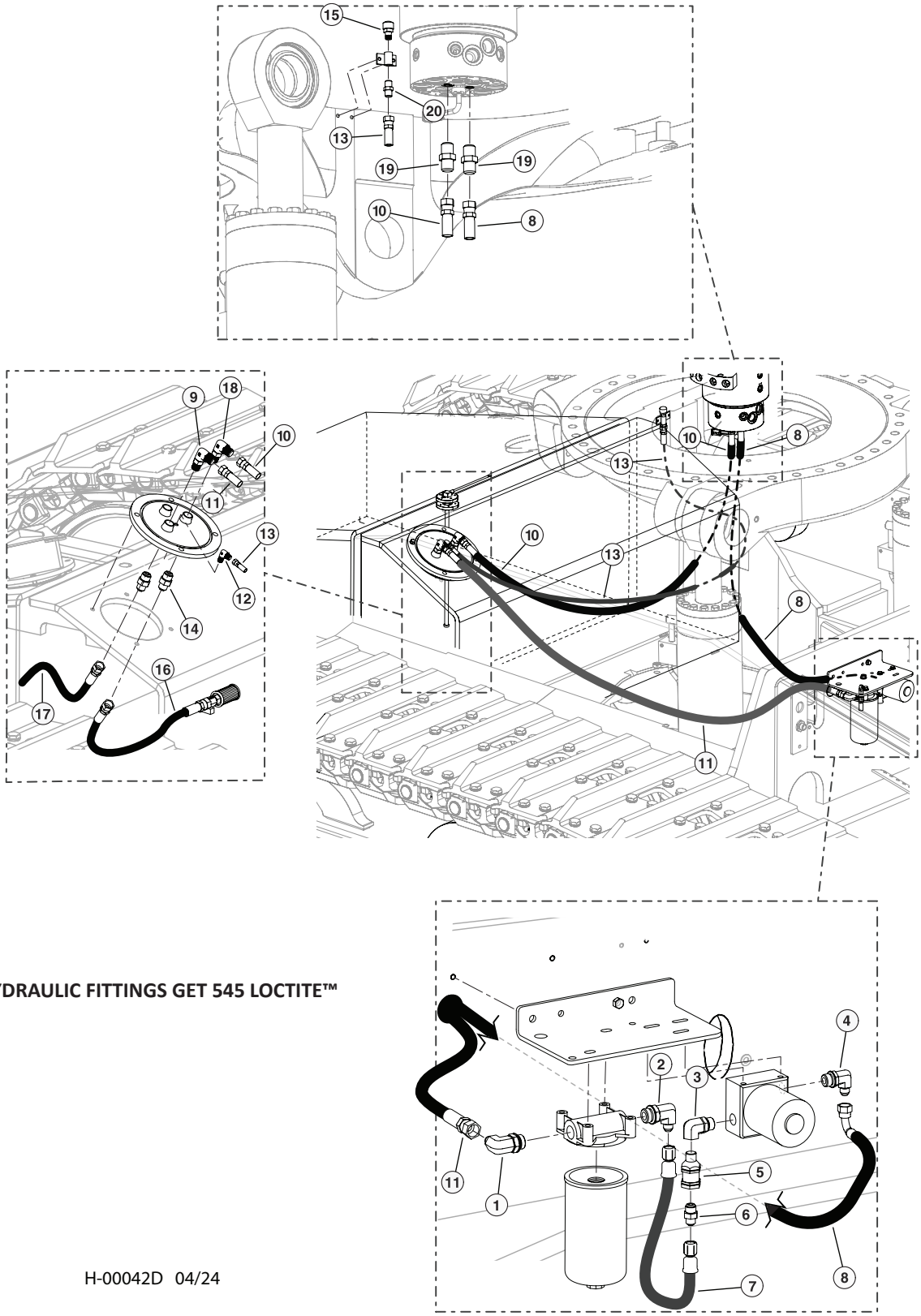


**NOTE: HYDRAULIC FITTINGS GET 545 LOCTITE™**

H-00042D 04/24

# P100-00100 - 10’4” (TL725, TL745) 11’0” (TL735) LEVELING CARBODY HOSE & FITTINGS (FUEL SYSTEM)

| Item | Part # | Description | Qty. |
|---|---|---|---|
| | 57457 | KIT, FITTING - TRACK LEVELING | 1 |
| 1 | 18109 | ELBOW, 90 - 6801-8-10 | 1 |
| 2 | 53073 | ELBOW, 90 6-JIC X 10-ORB) | 1 |
| 3 | 57824 | FITTING, ELBOW FEMALE - RAPTOR FUEL PUMP | 1 |
| 4 | 15480 | ELBOW, 90 - 6801-6 | 1 |
| 5 | 15652 | VALVE, CHECK - HYDRAULIC/FUEL | 1 |
| 6 | 16009 | FITTING, 6 FTX-S PIPE-JIC | 1 |
| 7 | 58064 | HOSE, FUEL RAPTOR PUMP TRACK | 1 |
| 8 | 55306 - (KIT) | HOSE ASSY - 221FR70 06-06JS-06J9-W - (FUEL PUMP OUT TO RM. FS) | 1 |
| 9 | 15481 | ELBOW, 90 - 6801-8 | 1 |
| 10 | 55306 - (KIT) | HOSE ASSY - 221FR78 06-06JS-06JS-W - (RM. FR TO FUEL TANK - RETURN) | 1 |
| 11 | 55306 - (KIT) | HOSE ASSY - 221FR70 08-08JS-08JS-W - (FUEL SUPPLY TO FILTER IN) | 1 |
| 12 | 15505 | ELBOW, 90 4-4 CLO-S | 1 |
| 13 | 55306 - (KIT) | HOSE ASSY - 387TC75 04-04OS-04OS-W - (FUEL VENT) | 1 |
| 14 | 15117 | CONNECTOR, STR - FF1852T-0808S | 2 |
| 15 | 54170 | VENT, FUEL TANK | 1 |
| 16 | 55306 - (KIT) | HOSE ASSY - 187TC42 08-08OS-08MP - (FUEL PICKUP - IN TANK) | 1 |
| 17 | 55306 - (KIT) | HOSE ASSY - 187TC20 08-08OS-OPEN - (FUEL RETURN - IN TANK) | 1 |
| 18 | 53145 | FITTING, 6-8 C50X-S - JIC | 1 |
| 19 | 53887 | FITTING, FUEL - ROTARY MANIFOLD #6 JIC | 2 |
| 20 | 15131 | CONNECTOR, STR - FF2031T-0404S | 1 |

# P100-00110 - 10’4” (TL725, TL745)  11’0” (TL735) LEVELING CARBODY HOSE & FITTINGS (LEVELING CYLINDER BASE & RM GREASE HOSE)

**NOTE: HYDRAULIC FITTINGS GET 545 LOCTITE™**

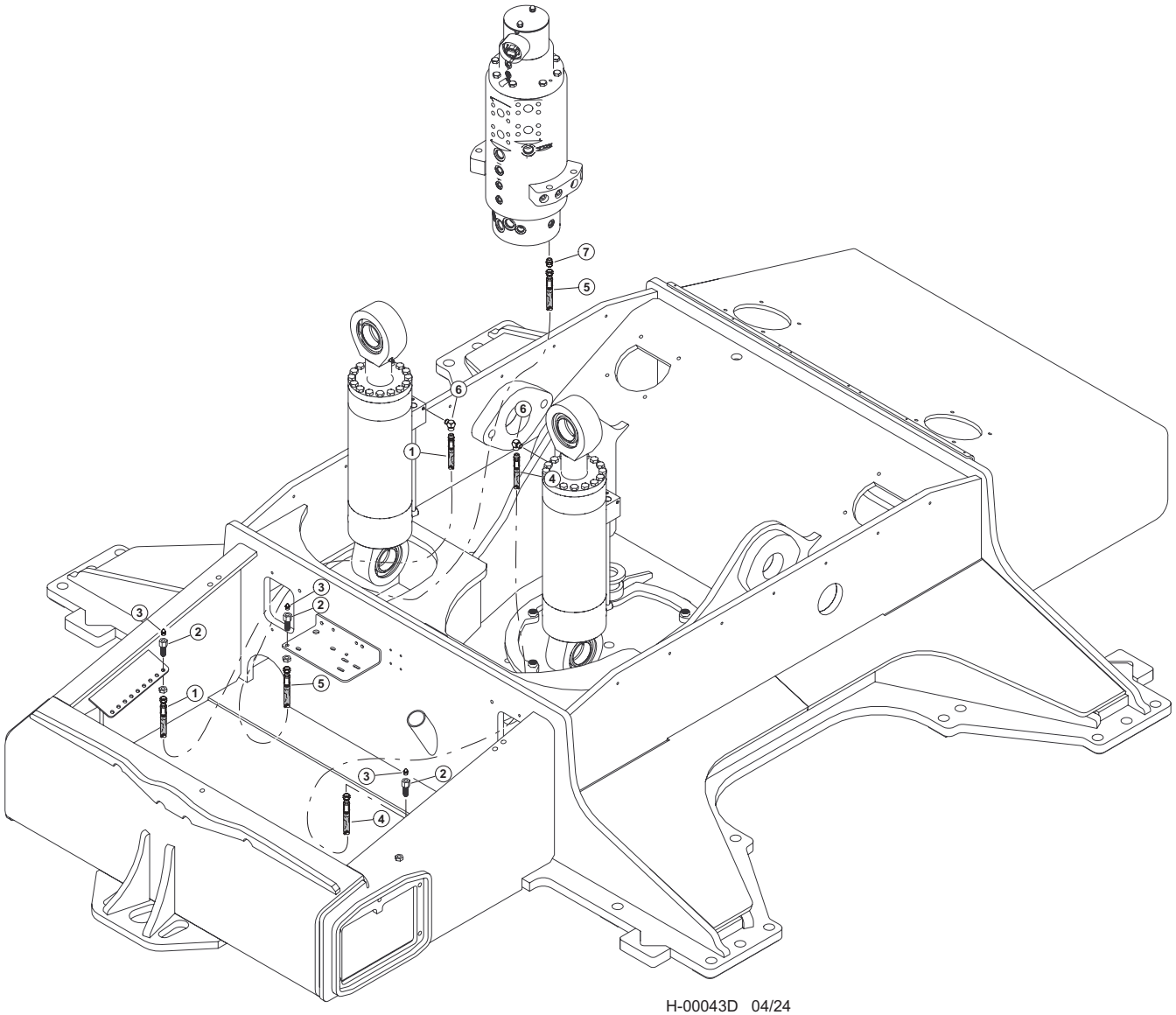


H-00043D  04/24

# P100-00110 - 10’4” (TL725, TL745) 11’0” (TL735) LEVELING CARBODY HOSE & FITTINGS (LEVELING CYLINDER BASE & RM GREASE HOSE)

| Item | Part # | Description | Qty. |
|---|---|---|---|
| | **57457** | **KIT, FITTING - TRACK LEVELING** | 1 |
| 1 | 55306 - (KIT) | HOSE ASSY - HLBD72 02-02PS-04JS-W - (LEVEL - LEFT GREASE LINE) | 1 |
| 2 | 15658 | CONNECTOR, STR BULKHEAD - 2239-2-4S | 2 |
| 3 | 10704 | FITTING, GREASE - .125 NPT - STR | 2 |
| 4 | 55306 - (KIT) | HOSE ASSY - HLBD72 02-02PS-04JS-W - (LEVEL - RIGHT GREASE LINE) | 1 |
| 5 | 55306 - (KIT) | HOSE ASSY - HLBD76 02-04JS-04JS-W - (ROTARY MANIFOLD GREASE LINE) | 1 |
| 6 | 22281 | ELBOW, 1/8-27 NPTF(M), 1/8-17 NPTF(F),90 | 2 |
| 7 | 51887 | CONNECTOR, STR - (4F50X-S) | 1 |

# P100-00120 - 10’4” (TL725, TL745) 11’0” (TL735) LEVELING CARBODY GREASE LINES & FITTINGS

**NOTE: HYDRAULIC FITTINGS GET 545 LOCTITE™**

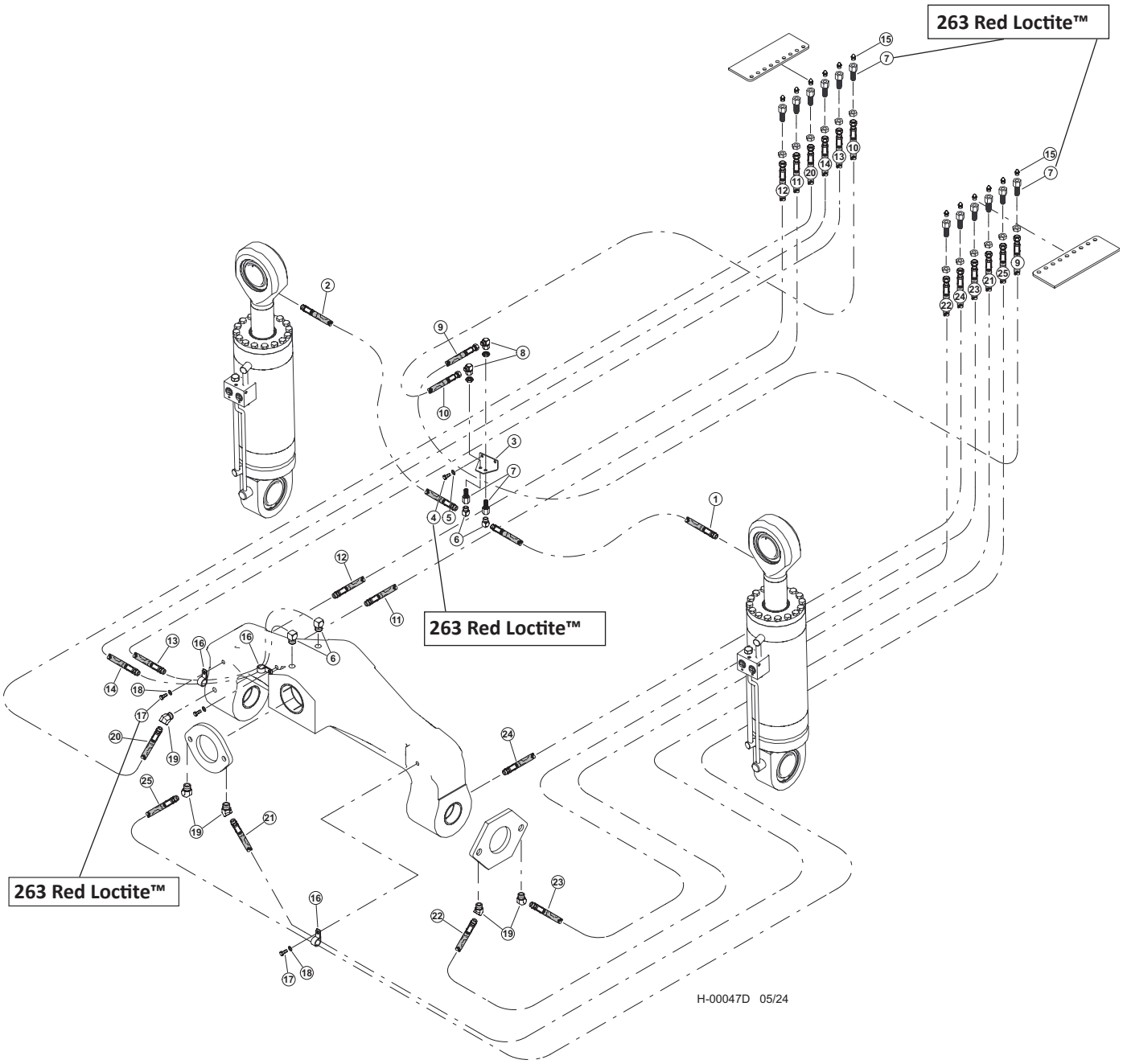

# P100-00120 - 10’4” (TL725, TL745) 11’0” (TL735) LEVELING CARBODY GREASE LINES & FITTINGS

| Item | Part # | Description | Qty. |
|---|---|---|---|
| | **57457** | **KIT, FITTING - TRACK LEVELING** | 1 |
| 1 | 53262 - (KIT) | HOSE ASSY - HLBD22 02-02SP-02SP-W - (LH CYL. ROD GREASE LINE) | 1 |
| 2 | 53262 - (KIT) | HOSE ASSY - HLBD22 02-02SP-02SP-W - (RH CYL. ROD GREASE LINE) | 1 |
| 3 | 47308 | BRACKET, GREASE LINE - LEVELING | 1 |
| 4 | 15576 | BOLT - .25” X 1” **263 RED LOCTITE™** | 2 |
| 5 | 10800 | WASHER, FLAT - .25” | 2 |
| 6 | 22281 | ELBOW, 1/8-27 NPTF(M), 1/8-17 NPTF(F),90 | 4 |
| 7 | 15658 | CONNECTOR, STR BULKHEAD - 2239-2-4S **263 RED LOCTITE™** | 14 |
| 8 | 17023 | ELBOW, 90 SWIVEL - 6500-4 | 2 |
| 9 | 53262 - (KIT) | HOSE ASSY - HLBD112 02-04JS-04JS-W - (LH CYL. BULKHEAD TO BULKHEAD GREASE LINE) | 1 |
| 10 | 53262 - (KIT) | HOSE ASSY - HLBD112 02-04JS-04JS-W - (RH CYL. BULKHEAD TO BULKHEAD GREASE LINE) | 1 |
| 11 | 53262 - (KIT) | HOSE ASSY - HLBD74 02-02PS-04JS-W-125 - (BULKHEAD TO LEVELER - RH REAR INNER) | 1 |
| 12 | 53262 - (KIT) | HOSE ASSY - HLBD75 02-02PS-04JS - (BULKHEAD TO LEVELER - RH REAR OUTER) | 1 |
| 13 | 53262 - (KIT) | HOSE ASSY - HLBD132 02-02SP-04JS-W - (BULKHEAD TO LEVELER - TOP REAR) | 1 |
| 14 | 53262 - (KIT) | HOSE ASSY - HLBD136 02-02SP-04JS - (BULKHEAD TO LEVELER - TOP FRONT) | 1 |
| 15 | 10704 | FITTING, GREASE - .125 NPT - STR | 12 |
| 16 | 17536 | CLAMP, HOSE - COATED STRAP - .75” | 3 |
| 17 | 15604 | BOLT - .25” X .75” **263 RED LOCTITE™** | 3 |
| 18 | 10757 | WASHER, SAE FLAT - .25” | 3 |
| 19 | 21671 | ELBOW, 45 - 5546134 | 4 |
| 20 | 53262 - (KIT) | HOSE ASSY - HLBD89 02-02PS-04JS - (BULKHEAD TO LEVELER - RH FRONT) | 1 |
| 21 | 53262 - (KIT) | HOSE ASSY - HLBD131 02-02PS-04JS-W - (BULKHEAD TO FRONT LH SLACK ADJUSTER) | 1 |
| 22 | 53262 - (KIT) | HOSE ASSY - HLBD82 02-02PS-04JS - (BULKHEAD TO LH SIDE SLACK ADJUSTER FRONT) | 1 |
| 23 | 53262 - (KIT) | HOSE ASSY - HLBD75 02-02PS-04JS-W125 - (BULKHEAD TO LH SIDE SLACK ADJUSTER REAR) | 1 |
| 24 | 53262 - (KIT) | HOSE ASSY - HLBD79 02-02PS-04JS - (BULKHEAD TO LEVELER - LH REAR) | 1 |
| 25 | 53262 - (KIT) | HOSE ASSY - HLBD134 02-02PS-04JS - (BULKHEAD TO FRONT RH SLACK ADJUSTER) | 1 |

# P100-00130 - 11’0” (TL745) LEVELING CARBODY HOSE & FITTINGS (RM. TO BULKHEAD & LH TRACK MOTOR FITTINGS)

**NOTE: HYDRAULIC FITTINGS GET 545 LOCTITE™**

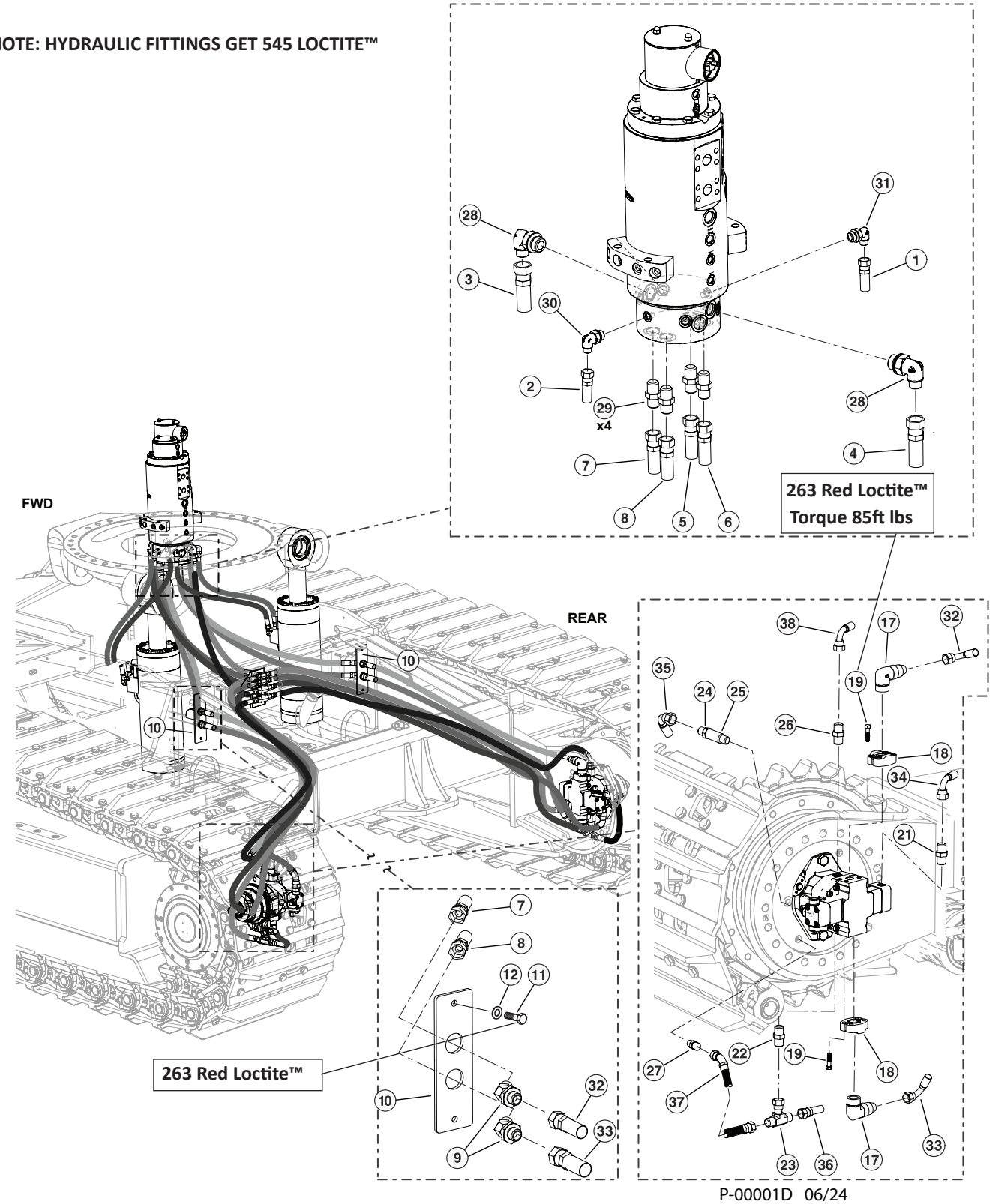


P-00001D 06/24

# P100-00130 - 11’0” (TL745) LEVELING CARBODY HOSE & FITTINGS (RM. TO BULKHEAD & LH TRACK MOTOR FITTINGS)

| Item | Part # | Description | Qty. |
|---|---|---|---|
| | **57458** | **KIT, FITTING - TRACK TRUNK** | 1 |
| | **57457** | **KIT, FITTING - TRACK LEVELING** | 1 |
| 1 | 55306 - (KIT) | HOSE ASSY - 387TC50 04-04OS-04OS-W - (SHIFT - RM #3 TO BULKHEAD) | 1 |
| 2 | 55306 - (KIT) | HOSE ASSY - 387TC51 06-06OS-06OS-W - (BRAKE - RM #1 TO BULKHEAD) | 1 |
| 3 | 55306 - (KIT) | HOSE ASSY - 187TC51 12-12OS-12OS-W - (FLUSH - RM #7 TO BULKHEAD) | 1 |
| 4 | 55306 - (KIT) | HOSE ASSY - 187TC58 12-12OS-12OS-W - (CASE - RM #1 TO BULKHEAD) | 1 |
| 5 | 55306 - (KIT) | HOSE ASSY - 797TC60 16-16OS-16OS-SW - (DRIVE LINE - RM #11 TO TOP RH BULKHEAD) | 1 |
| 6 | 55306 - (KIT) | HOSE ASSY - 797TC60 16-16OS-16OS-SW - (DRIVE LINE - RM #9 TO BOTTOM RH BULKHEAD) | 1 |
| 7 | 55306 - (KIT) | HOSE ASSY - 797TC62 16-16OS-16OS-SW - (DRIVE LINE - RM #12 TO TOP LH BULKHEAD) | 1 |
| 8 | 55306 - (KIT) | HOSE ASSY - 797TC60 16-16OS-16OS-SW - (DRIVE LINE - RM #10 TO BOTTOM LH BULKHEAD) | 1 |
| 9 | 54316 | ELBOW, BULKHEAD UNION 45DEG #16 | 2 |
| 10 | 60344 | PLATE, TRUNK - BH (TL) | 1 |
| 11 | 11707 | BOLT - .375” X 1” **263 RED LOCTITE™** | 2 |
| 12 | 15528 | WASHER, SAE FLAT - .375” | 2 |
| 17 | 15228 | ELBOW, 90 - FF1868T-1616S | 2 |
| 18 | 58359 | CONNECTOR,FLANGE PAD-W48-16-16U-M12 BLK | 2 |
| 19 | 1139657 | BOLT, M12-1.75 X 45MM L 10MM HEX DRIVE **(TORQUE 85FT LBS) 263 RED LOCTITE™)** | 8 |
| 21 | 53157 | FITTING, CONNECTOR - #4 ORF - 14MM | 1 |
| 22 | 54795 | CONNECTOR, STR ORIFICED .04” TRACK MOTOR | 1 |
| 23 | 52900 | SWIVEL, NUT BRANCH TEE #6 | 1 |
| 24 | 15117 | CONNECTOR, STR - FF1852T-0808S | 1 |
| 25 | 53651 | FITTING, FLUSHING ORIFICE - TRACK MOTOR | 1 |
| 26 | 52439 | CONNECTOR, MALE ISO 6149 | 1 |
| 27 | 53124 | FITTING, MALE CONNECTOR ISO 6149 | 1 |
| 28 | 17688 | ELBOW, 90 - FF1868T-1212S | 2 |
| 29 | 15225 | CONNECTOR, STR - FF1852T-1616S | 4 |
| 30 | 16296 | ELBOW, 90 - FF1868T-0606S | 1 |
| 31 | 15133 | ELBOW, 90 - FF1868T-0406S | 1 |
| 32 | 54022 - (KIT) | HOSE ASSY - 797TC57 16-16OS-16O9-SW - (DRIVE LINE - BULKHEAD TO TOP LEFT DRIVE MOTOR) | 1 |
| 33 | 54022 - (KIT) | HOSE ASSY - 797TC63 16-16OS-16O9-SW - (DRIVE LINE - BULKHEAD TO BOTTOM LEFT DRIVE MOTOR) | 1 |
| 34 | 54022 - (KIT) | HOSE ASSY - 387TC81 04-04OS-04O9-W - (SHIFT - BULKHEAD TO LEFT DRIVE MOTOR) | 1 |
| 35 | 54022 - (KIT) | HOSE ASSY - 187TC96 08-08OS-08O9-W - (FLUSH - BULKHEAD TO LEFT DRIVE MOTOR) | 1 |
| 36 | 54022 - (KIT) | HOSE ASSY - 387TC92 06-06OS-06OS-W - (BRAKE - BULKHEAD TO LEFT DRIVE MOTOR) | 1 |
| 37 | 54022 - (KIT) | HOSE ASSY - 387TC22 06-06OS-06O4 - (BRAKE JUMPER - LEFT DRIVE MOTOR TO FINAL DRIVE | 1 |
| 38 | 54022 - (KIT) | HOSE ASSY - 187TC82 08-08OS-08O9-W - (CASE DRAIN - BULKHEAD TO LEFT DRIVE MOTOR) | 1 |

# P100-00131 - U/C HYD. HOSE U, 11_0 CARBODY, LVL - 48L C/B - TL745 LH

**NOTE: HYDRAULIC FITTINGS GET 545 LOCTITE™**

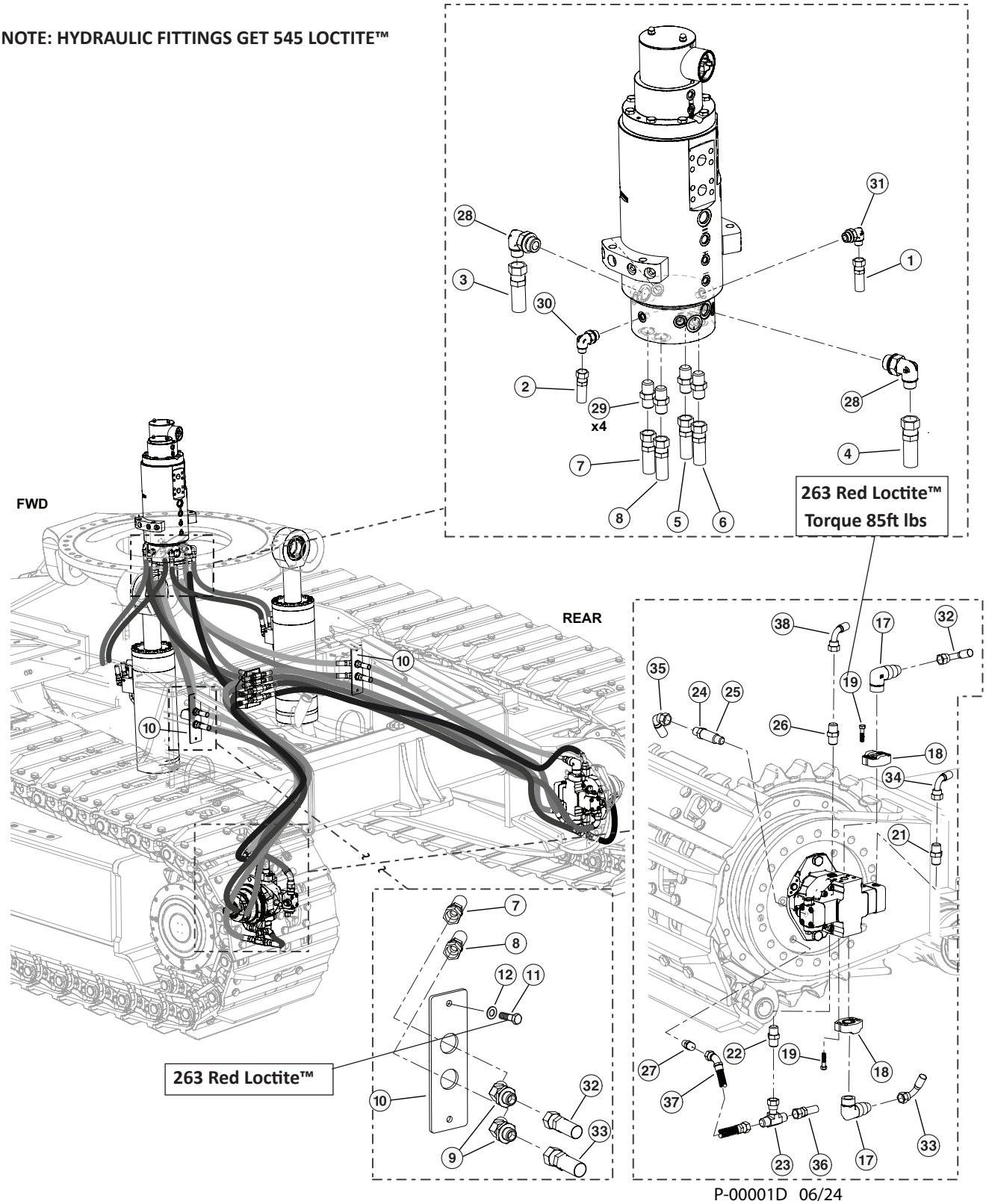


P-00001D 06/24

# P100-00131 - U/C HYD. HOSE U, 11_0 CARBODY, LVL - 48L C/B - TL745 LH

| Item | Part # | Description | Qty. |
|---|---|---|---|
| | 57458 | KIT, FITTING - TRACK TRUNK | 1 |
| | 57457 | KIT, FITTING - TRACK LEVELING | 1 |
| 1 | 55306 - (KIT) | HOSE ASSY - 387TC50 04-04OS-04OS-W - (SHIFT - RM #3 TO BULKHEAD) | 1 |
| 2 | 55306 - (KIT) | HOSE ASSY - 387TC51 06-06OS-06OS-W - (BRAKE - RM #1 TO BULKHEAD) | 1 |
| 3 | 55306 - (KIT) | HOSE ASSY - 187TC51 12-12OS-12OS-W - (FLUSH - RM #7 TO BULKHEAD) | 1 |
| 4 | 55306 - (KIT) | HOSE ASSY - 187TC58 12-12OS-12OS-W - (CASE DRAIN - RM V2 TO BULKHEAD) | 1 |
| 5 | 55306 - (KIT) | HOSE ASSY - 797TC60 16-16OS-16OS-SW - (DRIVE LINE - RM #11 TO TOP RH BULKHEAD) | 1 |
| 6 | 55306 - (KIT) | HOSE ASSY - 797TC60 16-16OS-16OS-SW - (DRIVE LINE - RM #9 TO BOTTOM RH BULKHEAD) | 1 |
| 7 | 55306 - (KIT) | HOSE ASSY - 797TC62 16-16OS-16OS-SW - (DRIVE LINE - RM #12 TO TOP LH BULKHEAD) | 1 |
| 8 | 55306 - (KIT) | HOSE ASSY - 797TC60 16-16OS-16OS-SW - (DRIVE LINE - RM #10 TO BOTTOM LH BULKHEAD) | 1 |
| 9 | 54316 | ELBOW, BULKHEAD UNION 45DEG #16 | 2 |
| 10 | 60344 | PLATE, TRUNK - BH (TL) | 1 |
| 11 | 11707 | BOLT - .375" X 1" **263 RED LOCTITE™** | 2 |
| 12 | 15528 | WASHER, SAE FLAT - .375" | 2 |
| 17 | 15228 | ELBOW, 90 - FF1868T-1616S | 2 |
| 18 | 58359 | CONNECTOR,FLANGE PAD-W48-16-16U-M12 BLK | 2 |
| 19 | (CALL) | BOLT, M12-1.75 X 45MM L 10MM HEX DRIVE **(TORQUE 85FT LBS) 263 RED LOCTITE™)** | 8 |
| 21 | 53157 | FITTING, CONNECTOR - #4 ORF - 14MM | 1 |
| 22 | 54795 | CONNECTOR, STR ORIFICED .04" TRACK MOTOR | 1 |
| 23 | 52900 | SWIVEL, NUT BRANCH TEE #6 | 1 |
| 24 | 15117 | CONNECTOR, STR - FF1852T-0808S | 1 |
| 25 | 53651 | FITTING, FLUSHING ORIFICE - TRACK MOTOR | 1 |
| 26 | 52439 | CONNECTOR, MALE ISO 6149 | 1 |
| 27 | 53124 | FITTING, MALE CONNECTOR ISO 6149 | 1 |
| 28 | 17688 | ELBOW, 90 - FF1868T-1212S | 2 |
| 29 | 15225 | CONNECTOR, STR - FF1852T-1616S | 4 |
| 30 | 16296 | ELBOW, 90 - FF1868T-0606S | 1 |
| 31 | 15133 | ELBOW, 90 - FF1868T-0406S | 1 |
| 32 | 54022 - (KIT) | HOSE ASSY - 797TC57 16-16OS-16O9-SW - (DRIVE LINE - BULKHEAD TO LEFT HAND DRIVE MOTOR TOP PORT) | 1 |
| 33 | 54022 - (KIT) | HOSE ASSY - 797TC63 16-16OS-16O9-SW - (DRIVE LINE - BULKHEAD TO LEFT HAND DRIVE MOTOR BOTTOM PORT) | 1<br>1 |
| 34 | 54022 - (KIT) | HOSE ASSY - 387TC81 04-04OS-04O9-W - (SHIFT - BULKHEAD TO LEFT DRIVE MOTOR) | 1 |
| 35 | 54022 - (KIT) | HOSE ASSY - 187TC96 08-08OS-08O9-W - (FLUSH - BULKHEAD TO LEFT DRIVE MOTOR) | 1 |
| 36 | 54022 - (KIT) | HOSE ASSY - 387TC92 06-06OS-06OS-W - (BRAKE - BULKHEAD TO LEFT DRIVE MOTOR) | 1 |
| 37 | 54022 - (KIT) | HOSE ASSY - 387TC22 06-06OS-06O4 - (BRAKE JUMPER - LEFT DRIVE MOTOR TO INAL DRIVE) | 1 |
| 38 | 54022 - (KIT) | HOSE ASSY - 187TC82 08-08OS-08O9-W - (CASE DRAIN - BULKHEAD TO LEFT DRIVE MOTOR) | |

# P100-00140 - 11’0” (TL745) LEVELING CARBODY HOSE & FITTINGS (RM. TO BULKHEAD & RH TRACK MOTOR FITTINGS)

**NOTE: HYDRAULIC FITTINGS GET 545 LOCTITE™**

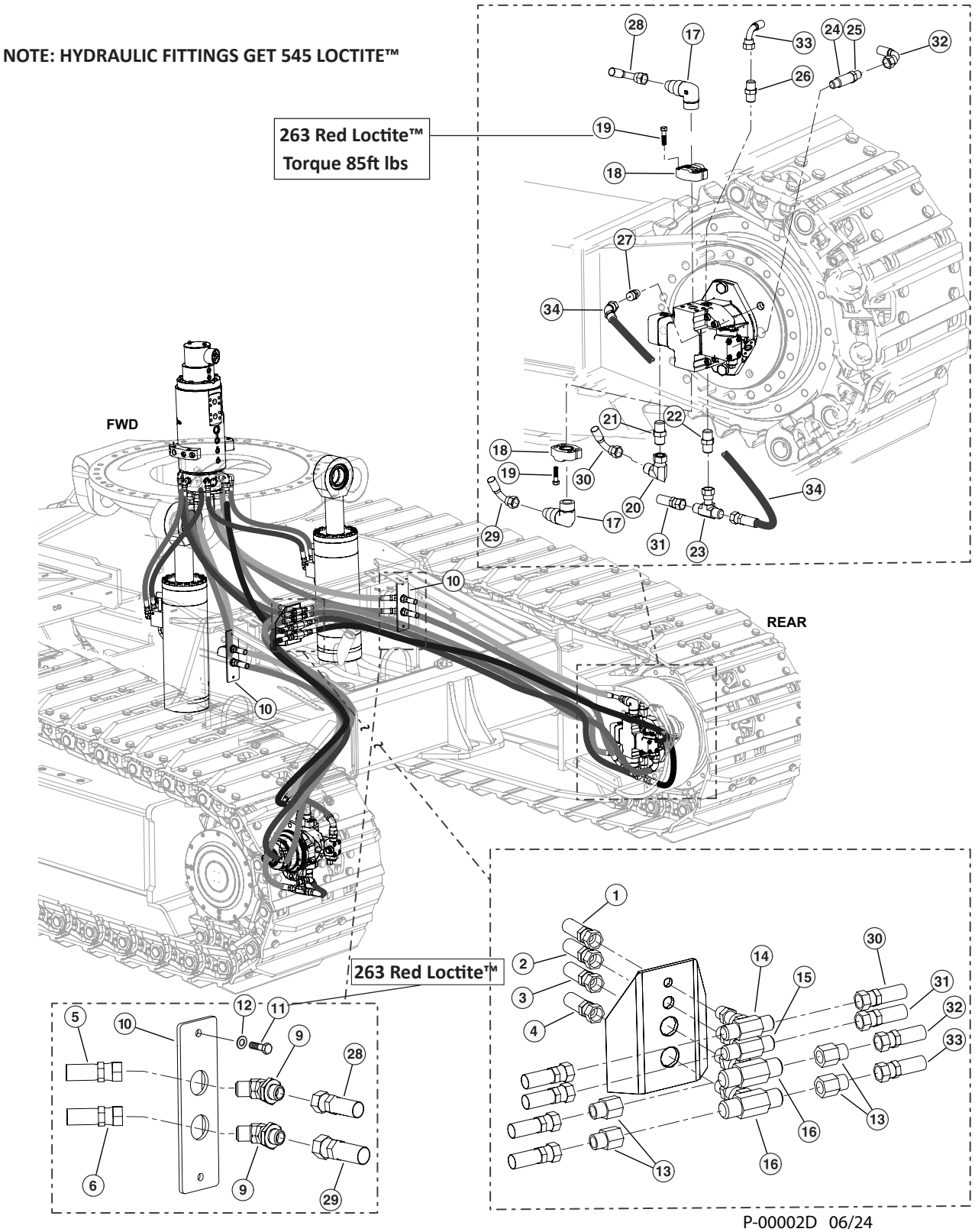


P-00002D 06/24

# P100-00140 - 11’0” (TL745) LEVELING CARBODY HOSE & FITTINGS (RM. TO BULKHEAD & RH TRACK MOTOR FITTINGS)

| Item | Part # | Description | Qty. |
|---|---|---|---|
| | **57458** | **KIT, FITTING - TRACK TRUNK** | 1 |
| | **57457** | **KIT, FITTING - TRACK LEVELING** | 1 |
| 1 | 55306 - (KIT) | HOSE ASSY - 387TC50 04-04OS-04OS-W - (SHIFT - RM #3 TO BULKHEAD) | 1 |
| 2 | 55306 - (KIT) | HOSE ASSY - 387TC51 06-06OS-06OS-W - (BRAKE - RM #1 TO BULKHEAD) | 1 |
| 3 | 55306 - (KIT) | HOSE ASSY - 187TC51 12-12OS-12OS-W - (FLUSH - RM #7 TO BULKHEAD) | 1 |
| 4 | 55306 - (KIT) | HOSE ASSY - 187TC58 12-12OS-12OS-W - (CASE - RM #1 TO BULKHEAD) | 1 |
| 5 | 55306 - (KIT) | HOSE ASSY - 797TC60 16-16OS-16OS-SW - (DRIVE LINE - RM #11 TO TOP RH BULKHEAD) | 1 |
| 6 | 55306 - (KIT) | HOSE ASSY - 797TC60 16-16OS-16OS-SW - (DRIVE LINE - RM #9 TO BOTTOM RH BULKHEAD) | 1 |
| 9 | 54316 | ELBOW, BULKHEAD UNION 45DEG #16 | 2 |
| 10 | 60344 | PLATE, TRUNK - BH (TL) | 1 |
| 11 | 11707 | BOLT - .375” X 1” **263 RED LOCTITE™** | 2 |
| 12 | 15528 | WASHER, SAE FLAT - .375” | 2 |
| 13 | 18581 | CONNECTOR, REDUCER - ORS FF2281T-0812S | 4 |
| 14 | 52901 | TEE, BULKHEAD BRANCH - 4 | 1 |
| 15 | 52902 | TEE, BULKHEAD BRANCH - 6 | 1 |
| 16 | 53192 | FITTING, BULKHEAD BRANCH TEE- 12 WJLO-WL | 2 |
| 17 | 15228 | ELBOW, 90 - FF1868T-1616S | 4 |
| 18 | 58359 | CONNECTOR,FLANGE PAD-W48-16-16U-M12 BLK | 4 |
| 19 | 1139657 | BOLT, M12-1.75 X 45MM L 10MM HEX DRIVE **(TORQUE 85FT LBS) 263 RED LOCTITE™** | 8 |
| 20 | 15145 | ELBOW, 90 SWIVEL - FF2098T-0404S | 2 |
| 21 | 53157 | FITTING, CONNECTOR - #4 ORF - 14MM | 2 |
| 22 | 54795 | CONNECTOR, STR ORIFICED .04” TRACK MOTOR | 2 |
| 23 | 52900 | SWIVEL, NUT BRANCH TEE #6 | 2 |
| 24 | 53651 | FITTING, FLUSHING ORIFICE - TRACK MOTOR | 2 |
| 25 | 15117 | CONNECTOR, STR - FF1852T-0808S | 2 |
| 26 | 52439 | CONNECTOR, MALE ISO 6149 | 2 |
| 27 | 53124 | FITTING, MALE CONNECTOR ISO 6149 | 2 |
| 28 | 54022 - (KIT) | HOSE ASSY - 797TC57 16-16OS-16O9-SW - (DRIVE LINE - BULKHEAD TO TOP RIGHT DRIVE MOTOR) | 1 |
| 29 | 54022 - (KIT) | HOSE ASSY - 797TC63 16-16OS-16O9-SW - (DRIVE LINE - BULKHEAD TO BOTTOM RIGHT DRIVE MOTOR) | 1 |
| 30 | 54022 - (KIT) | HOSE ASSY - 387TC81 04-04OS-04O9-W - (SHIFT - BULKHEAD TO RIGHT DRIVE MOTOR) | 1 |
| 31 | 54022 - (KIT) | HOSE ASSY - 387TC92 06-06OS-06OS-W - (BRAKE - BULKHEAD TO RIGHT DRIVE MOTOR) | 1 |
| 32 | 54022 - (KIT) | HOSE ASSY - 187TC96 08-08OS-08O9-W - (FLUSH - BULKHEAD TO RIGHT DRIVE MOTOR) | 1 |
| 33 | 54022 - (KIT) | HOSE ASSY - 187TC82 08-08OS-08O9-W - (CASE DRAIN - BULKHEAD TO RIGHT DRIVE MOTOR) | 1 |
| 34 | 54022 - (KIT) | HOSE ASSY - 387TC22 06-06OS-06O4 - (BRAKE JUMPER - RIGHT DRIVE MOTOR TO FINAL DRIVE | 1 |

# P100-00150 - 11’0” (TL745) CARBODY CAB LEVELING HYD. HOSE LOWER CONNECTIONS (ROTARY MAINFOLD TO CYLINDERS)

**NOTE: HYDRAULIC FITTINGS GET 545 LOCTITE™**

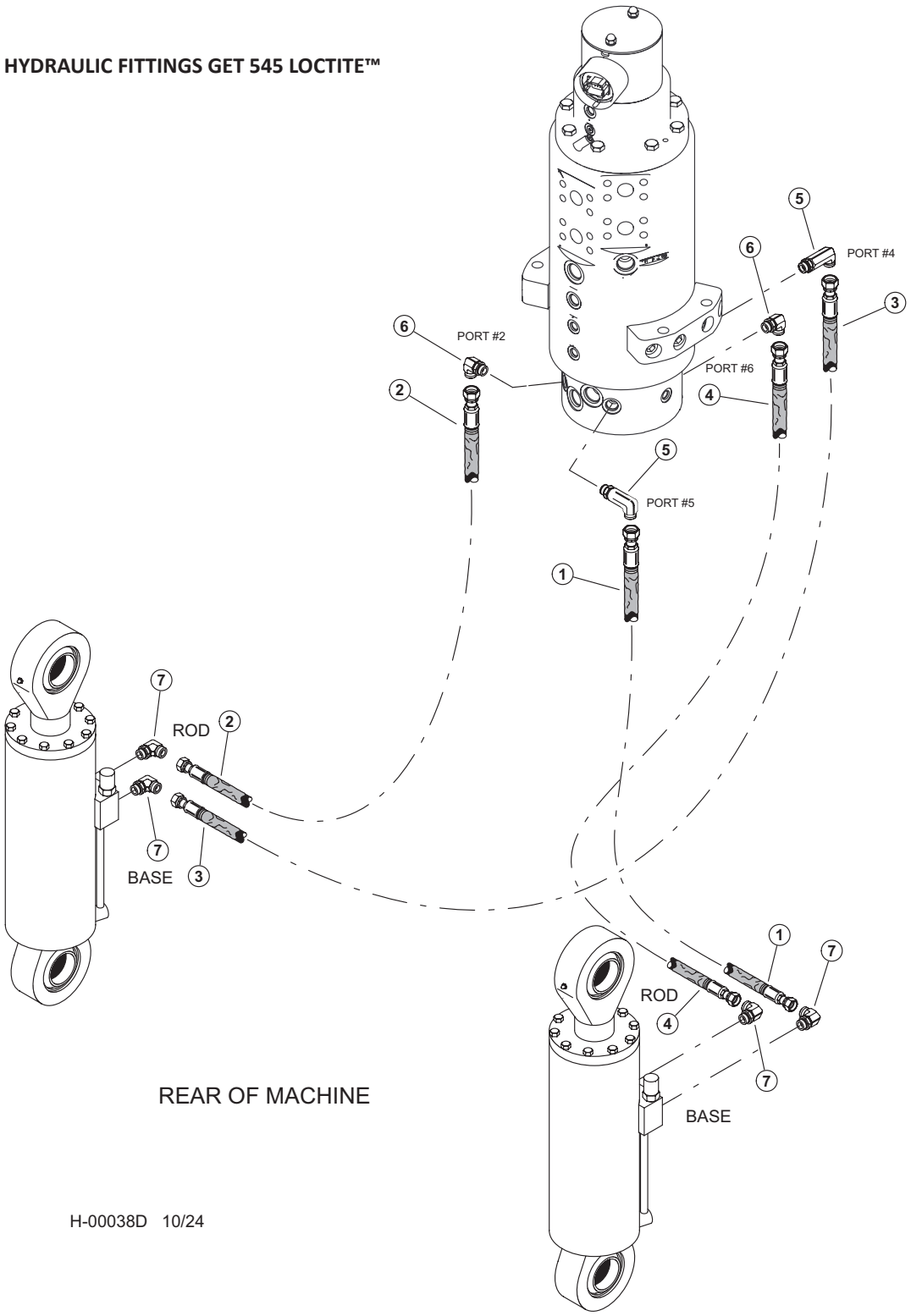


H-00038D 10/24

# P100-00150 - 11’0” (TL745) CARBODY CAB LEVELING HYD. HOSE LOWER CONNECTIONS (ROTARY MAINFOLD TO CYLINDERS)

| Item | Part # | Description | Qty. |
|---|---|---|---|
| | **57457** | **KIT, FITTING - TRACK LEVELING** | 1 |
| | **57947** | **KIT, FITTING TRACK LEVEL** | 1 |
| 1 | 55306 - (KIT) | HOSE ASSY - 787TC54 08-08OS-080s - (RM #5 TO RH CYL ROD) | 1 |
| 2 | 55306 - (KIT) | HOSE ASSY - 787TC42 08-08OS-080s - (RM #2 TO RH CYL BASE) | 1 |
| 3 | 55306 - (KIT) | HOSE ASSY - 787TC54 08-08OS-080s - (RM #4 TO LH CYL ROD) | 1 |
| 4 | 55306 - (KIT) | HOSE ASSY - 787TC43 08-08OS-080s - (RM #6 TO LH CYL BASE) | 1 |
| 5 | 57445 | FITTING, 8 CC5OLO-S | 2 |
| 6 | 16360 | ELBOW, 90 - FF1868T-0808S | 1 |
| 7 | 15154 | ELBOW, 90 - FF1868T-0810S | 4 |

# P100-00160 - 11’0” (TL745) LEVELING CARBODY HOSE & FITTINGS - (FUEL SYSTEM)

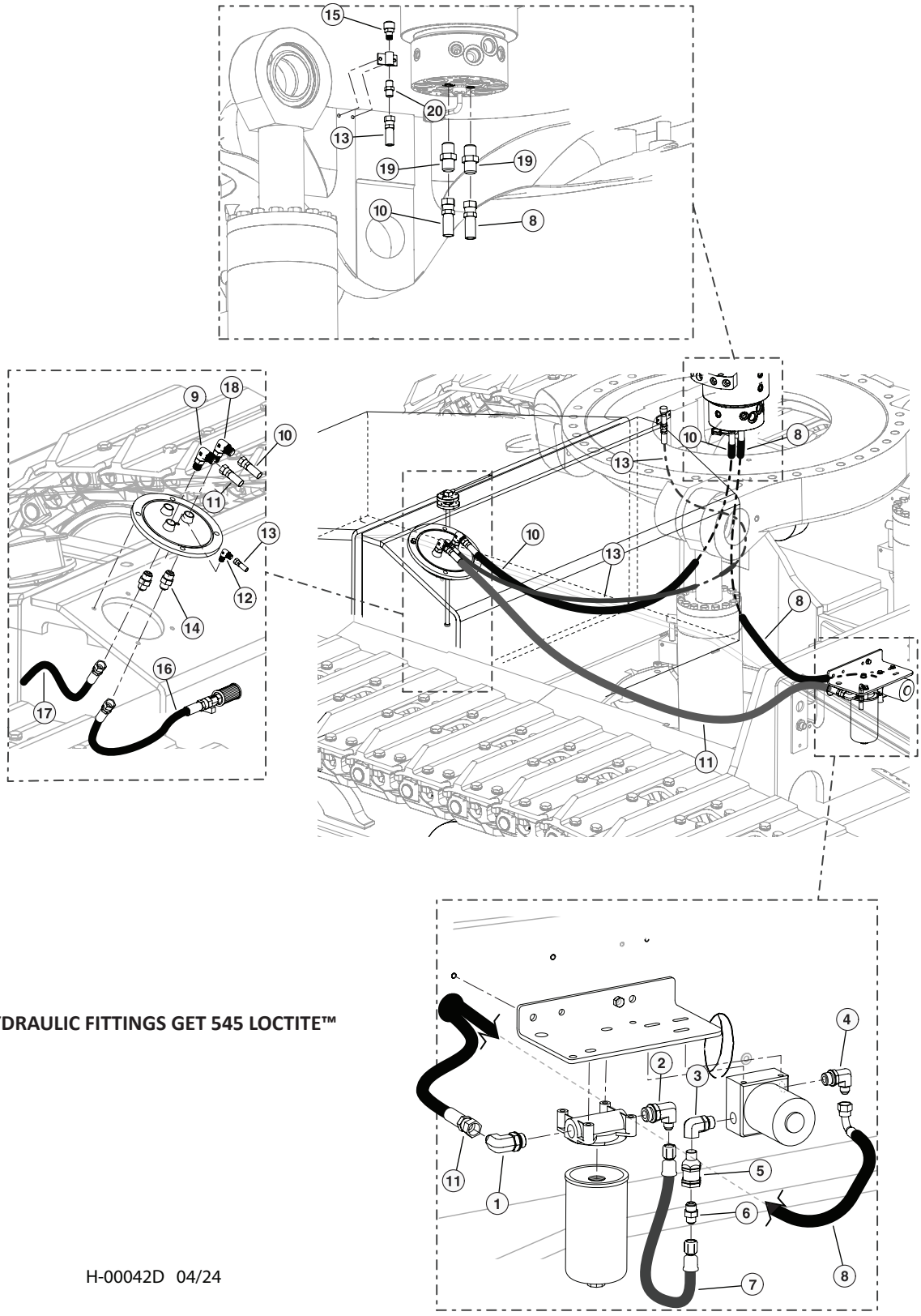


**NOTE: HYDRAULIC FITTINGS GET 545 LOCTITE™**

H-00042D 04/24

# P100-00160 - 11’0” (TL745) LEVELING CARBODY HOSE & FITTINGS - (FUEL SYSTEM)

| Item | Part # | Description | Qty. |
|---|---|---|---|
| | 57457 | KIT, FITTING - TRACK LEVELING | 1 |
| 1 | 18109 | ELBOW, 90 - 6801-8-10 | 1 |
| 2 | 53073 | ELBOW, 90 6-JIC X 10-ORB) | 1 |
| 3 | 57824 | FITTING, ELBOW FEMALE - RAPTOR FUEL PUMP | 1 |
| 4 | 15480 | ELBOW, 90 - 6801-6 | 1 |
| 5 | 15652 | VALVE, CHECK - HYDRAULIC/FUEL | 1 |
| 6 | 16009 | FITTING, 6 FTX-S PIPE-JIC | 1 |
| 7 | 58064 | HOSE, FUEL RAPTOR PUMP TRACK | 1 |
| 8 | 55306 - (KIT) | HOSE ASSY - 221FR70 06-06JS-06J9-W - (FUEL PUMP OUT TO RM. FS) | 1 |
| 9 | 15481 | ELBOW, 90 - 6801-8 | 1 |
| 10 | 55306 - (KIT) | HOSE ASSY - 221FR78 06-06JS-06JS-W - (RM. FR TO FUEL TANK - RETURN) | 1 |
| 11 | 55306 - (KIT) | HOSE ASSY - 221FR70 08-08JS-08JS-W - (FUEL SUPPLY TO FILTER IN) | 1 |
| 12 | 15505 | ELBOW, 90 4-4 CLO-S | 1 |
| 13 | 55306 - (KIT) | HOSE ASSY - 387TC75 04-04OS-04OS-W - (FUEL VENT) | 1 |
| 14 | 15117 | CONNECTOR, STR - FF1852T-0808S | 2 |
| 15 | 54170 | VENT, FUEL TANK | 1 |
| 16 | 55306 - (KIT) | HOSE ASSY - 187TC42 08-08OS-08MP - (FUEL PICKUP - IN TANK) | 1 |
| 17 | 55306 - (KIT) | HOSE ASSY - 187TC20 08-08OS-OPEN - (FUEL RETURN - IN TANK) | 1 |
| 18 | 53145 | FITTING, 6-8 C50X-S - JIC | 1 |
| 19 | 53887 | FITTING, FUEL - ROTARY MANIFOLD #6 JIC | 2 |
| 20 | 15131 | CONNECTOR, STR - FF2031T-0404S | 1 |

# P100-00170 - 11’0” (TL745) LEVELING CARBODY HOSE & FITTINGS (LEVELING CYLINDER BASE & RM GREASE HOSES)

**NOTE: HYDRAULIC FITTINGS GET 545 LOCTITE™**

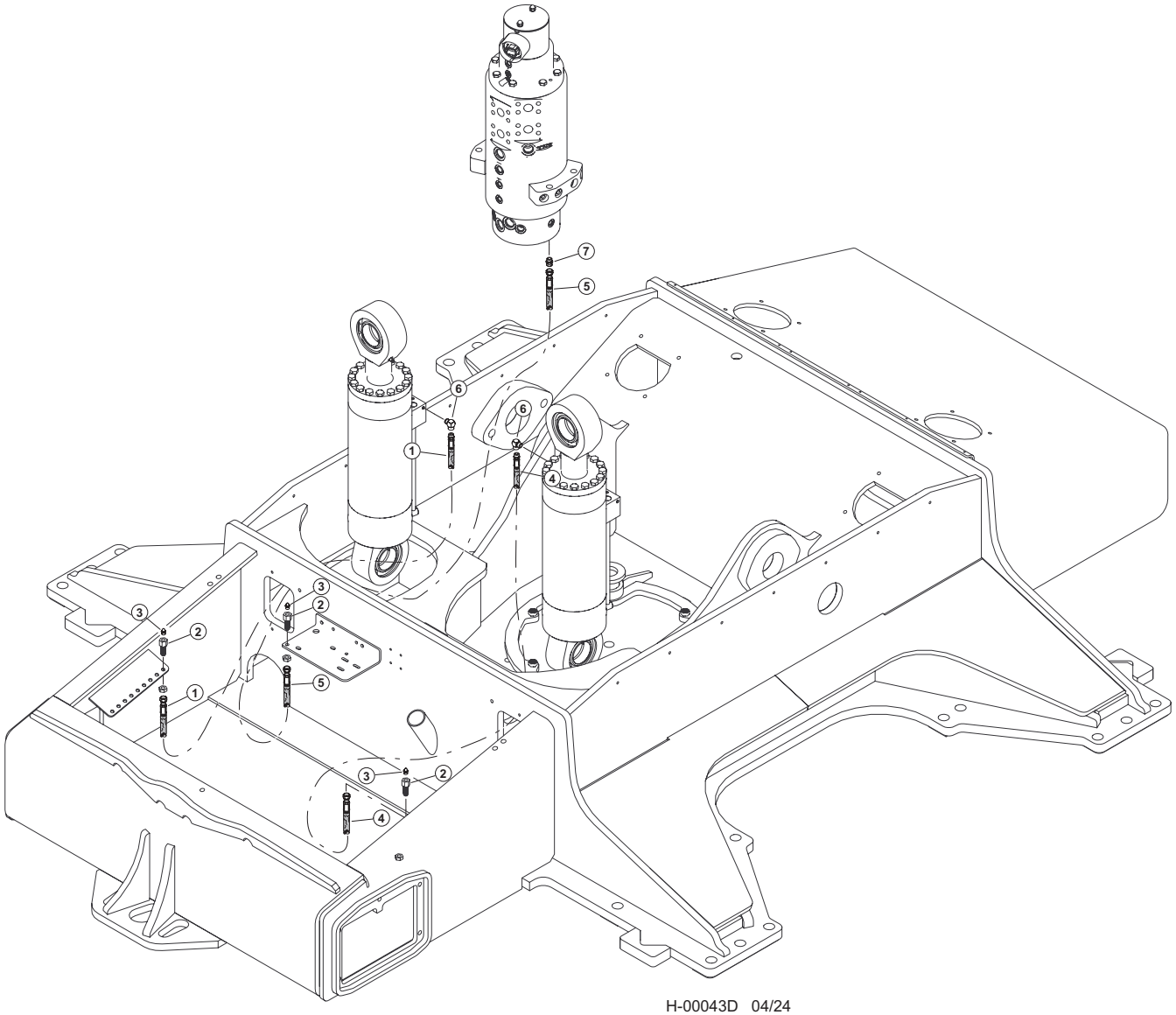


H-00043D 04/24

# P100-00170 - 11’0” (TL745) LEVELING CARBODY HOSE & FITTINGS (LEVELING CYLINDER BASE & RM GREASE HOSES)

| Item | Part # | Description | Qty. |
|---|---|---|---|
| | **57457** | **KIT, FITTING - TRACK LEVELING** | 1 |
| 1 | 55306 - (KIT) | HOSE ASSY - HLBD72 02-02PS-04JS-W - (LEVEL - LEFT GREASE LINE) | 1 |
| 2 | 15658 | CONNECTOR, STR BULKHEAD - 2239-2-4S | 2 |
| 3 | 10704 | FITTING, GREASE - .125 NPT - STR | 2 |
| 4 | 55306 - (KIT) | HOSE ASSY - HLBD72 02-02PS-04JS-W - (LEVEL - RIGHT GREASE LINE) | 1 |
| 5 | 55306 - (KIT) | HOSE ASSY - HLBD76 02-04JS-04JS-W - (ROTARY MANIFOLD GREASE LINE) | 1 |
| 6 | 22281 | ELBOW, 1/8-27 NPTF(M), 1/8-17 NPTF(F),90 | 2 |
| 7 | 51887 | CONNECTOR, STR - (4F50X-S) | 1 |

# P100-00180 - 11’0” (TL745) LEVELING CARBODY GREASE LINES & FITTINGS

**NOTE: HYDRAULIC FITTINGS GET 545 LOCTITE™**

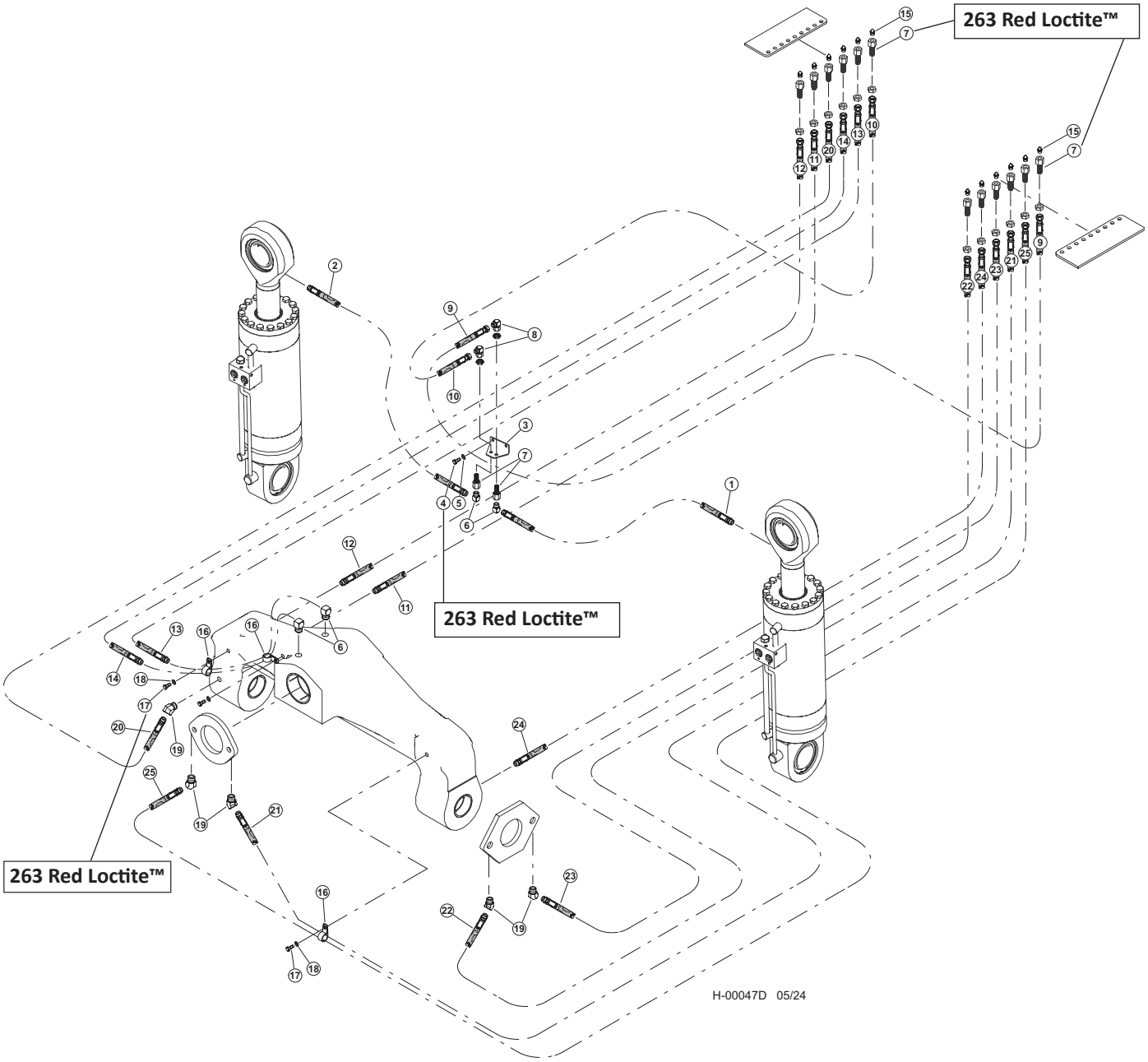

# P100-00180 - 11’0” (TL745) LEVELING CARBODY GREASE LINES & FITTINGS

| Item | Part # | Description | Qty. |
|---|---|---|---|
| | **57457** | **KIT, FITTING - TRACK LEVELING** | 1 |
| 1 | 53262 - (KIT) | HOSE ASSY - HLBD22 02-02SP-02SP-W - (LH CYL. ROD GREASE LINE) | 1 |
| 2 | 53262 - (KIT) | HOSE ASSY - HLBD22 02-02SP-02SP-W - (RH CYL. ROD GREASE LINE) | 1 |
| 3 | 47308 | BRACKET, GREASE LINE - LEVELING | 1 |
| 4 | 15576 | BOLT - .25” X 1” **263 RED LOCTITE™** | 2 |
| 5 | 10800 | WASHER, FLAT - .25” | 2 |
| 6 | 22281 | ELBOW, 1/8-27 NPTF(M), 1/8-17 NPTF(F),90 | 4 |
| 7 | 15658 | CONNECTOR, STR BULKHEAD - 2239-2-4S **263 RED LOCTITE™** | 14 |
| 8 | 17023 | ELBOW, 90 SWIVEL - 6500-4 | 2 |
| 9 | 53262 - (KIT) | HOSE ASSY - HLBD112 02-04JS-04JS-W - (LH CYL. BULKHEAD TO BULKHEAD GREASE LINE) | 1 |
| 10 | 53262 - (KIT) | HOSE ASSY - HLBD112 02-04JS-04JS-W - (RH CYL. BULKHEAD TO BULKHEAD GREASE LINE) | 1 |
| 11 | 53262 - (KIT) | HOSE ASSY - HLBD74 02-02PS-04JS-W-125 - (BULKHEAD TO LEVELER - RH REAR INNER) | 1 |
| 12 | 53262 - (KIT) | HOSE ASSY - HLBD75 02-02PS-04JS - (BULKHEAD TO LEVELER - RH REAR OUTER) | 1 |
| 13 | 53262 - (KIT) | HOSE ASSY - HLBD132 02-02SP-04JS-W - (BULKHEAD TO LEVELER - TOP REAR) | 1 |
| 14 | 53262 - (KIT) | HOSE ASSY - HLBD136 02-02SP-04JS - (BULKHEAD TO LEVELER - TOP FRONT) | 1 |
| 15 | 10704 | FITTING, GREASE - .125 NPT - STR | 12 |
| 16 | 17536 | CLAMP, HOSE - COATED STRAP - .75” | 3 |
| 17 | 15604 | BOLT - .25” X .75” **263 RED LOCTITE™** | 3 |
| 18 | 10757 | WASHER, SAE FLAT - .25” | 3 |
| 19 | 21671 | ELBOW, 45 - 5546134 | 4 |
| 20 | 53262 - (KIT) | HOSE ASSY - HLBD89 02-02PS-04JS - (BULKHEAD TO LEVELER - RH FRONT) | 1 |
| 21 | 53262 - (KIT) | HOSE ASSY - HLBD131 02-02PS-04JS-W - (BULKHEAD TO FRONT LH SLACK ADJUSTER) | 1 |
| 22 | 53262 - (KIT) | HOSE ASSY - HLBD82 02-02PS-04JS - (BULKHEAD TO LH SIDE SLACK ADJUSTER FRONT) | 1 |
| 23 | 53262 - (KIT) | HOSE ASSY - HLBD75 02-02PS-04JS-W125 - (BULKHEAD TO LH SIDE SLACK ADJUSTER REAR) | 1 |
| 24 | 53262 - (KIT) | HOSE ASSY - HLBD79 02-02PS-04JS - (BULKHEAD TO LEVELER - LH REAR) | 1 |
| 25 | 53262 - (KIT) | HOSE ASSY - HLBD134 02-02PS-04JS - (BULKHEAD TO FRONT RH SLACK ADJUSTER) | 1 |

# P100-00190 - 9’6” 48L NON-LEVELING LEVELING CARBODY HYD. FITTINGS (RM. TO BULKHEAD TO TRACK MOTORS)

**NOTE: HYDRAULIC FITTINGS GET 545 LOCTITE™**

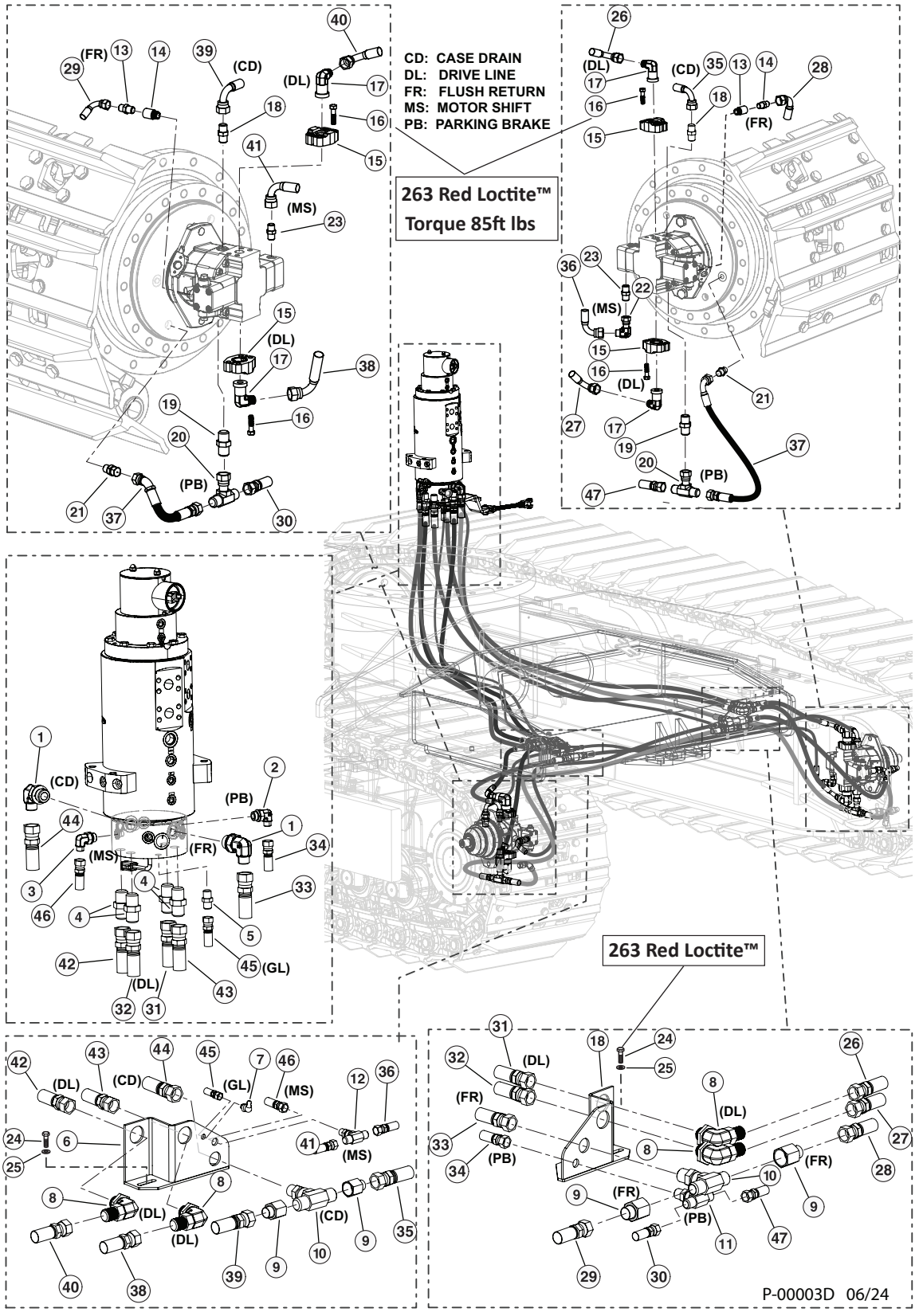

# P100-00190 - 9’6” 48L NON-LEVELING LEVELING CARBODY HYD. FITTINGS (RM. TO BULKHEAD TO TRACK MOTORS)

| Item | Part # | Description | Qty. |
|---|---|---|---|
| | **57458** | **KIT, FITTING - TRACK TRUNK** | 1 |
| | **57968** | **KIT, FITTING - ROTARY MANIFOLD TRACK NL** | 1 |
| | **57456** | **KIT, FITTING - TRACK NL CARBODY** | 1 |
| 1 | 17688 | ELBOW, 90 - FF1868T-1212S | 2 |
| 2 | 15133 | ELBOW, 90 - FF1868T-0406S | 1 |
| 3 | 16296 | ELBOW, 90 - FF1868T-0606S | 1 |
| 4 | 15225 | CONNECTOR, STR - FF1852T-1616S | 4 |
| 5 | 51887 | CONNECTOR, STR - (4F50X-S) | 1 |
| 6 | 53762 | BULKHEAD, TRACK HOSE L.H. | 1 |
| 7 | 15684 | FITTING, GREASE - .125 NPT - 90 | 1 |
| 8 | 53680 | FITTING, BULKHEAD UNION ELBOW 16 WELO-WN | 4 |
| 9 | 18581 | CONNECTOR, REDUCER - ORS FF2281T-0812S | 4 |
| 10 | 53192 | FITTING, BULKHEAD BRANCH TEE- 12 WJLO-WL | 2 |
| 11 | 52902 | TEE, BULKHEAD BRANCH - 6 | 1 |
| 12 | 52901 | TEE, BULKHEAD BRANCH - 4 | 1 |
| 13 | 15117 | CONNECTOR, STR - FF1852T-0808S | 2 |
| 14 | 53651 | FITTING, FLUSHING ORIFICE - TRACK MOTOR | 2 |
| 15 | 58359 | CONNECTOR,FLANGE PAD-W48-16-16U-M12 BLK | 4 |
| 16 | 1139657 | BOLT, M12-1.75 X 45MM L 10MM HEX DRIVE **(TORQUE 85FT LBS) 263 RED LOCTITE™** | 16 |
| 17 | 15228 | ELBOW, 90 - FF1868T-1616S | 4 |
| 18 | 52439 | CONNECTOR, MALE ISO 6149 | 1 |
| 19 | 54795 | CONNECTOR, STR ORIFICED .04” TRACK MOTOR | 2 |
| 20 | 52900 | SWIVEL, NUT BRANCH TEE #6 | 2 |
| 21 | 53124 | FITTING, MALE CONNECTOR ISO 6149 | 2 |
| 22 | 15145 | ELBOW, 90 SWIVEL - FF2098T-0404S | 2 |
| 23 | 53157 | FITTING, CONNECTOR - #4 ORF - 14MM | 2 |
| 24 | 11707 | BOLT - .375” X 1” **263 RED LOCTITE™** | 4 |
| 25 | 15528 | WASHER, SAE FLAT - .375” | 4 |
| 26 | 55597 - (KIT) | HOSE ASSY - 797TC25 16-16OS-1609-SW - (BULKHEAD TO RH DRIVE MOTOR - TOP) | 1 |
| 27 | 55597 - (KIT) | HOSE ASSY - 797TC32 16-16OS-1609-SW - (BULKHEAD TO RH DRIVE MOTOR - BOTTOM) | 1 |
| 28 | 55597 - (KIT) | HOSE ASSY - 187TC58 08-08OS-0809-W - (FLUSH - BULKHEAD TEE TO RH DM) | 1 |
| 29 | 55597 - (KIT) | HOSE ASSY - 187TC68 08-08OS-0809-W - (FLUSH - BULKHEAD TEE TO LH DM) | 1 |
| 30 | 55597 - (KIT) | HOSE ASSY - 387TC48 06-06OS-060S-W - (BRAKE - BULKHEAD TEE TO RH DM) | 1 |
| 31 | 55597 - (KIT) | HOSE ASSY - 789TC73 16-16OS-1604-SW - (DRIVE LINE - ROTARY MANIFOLD #10 TO LH OUTSIDE BULKHEAD) | 1 |
| 32 | 55597 - (KIT) | HOSE ASSY - 789TC74 16-16OS-1604-SW - (DRIVE LINE - ROTARY MANIFOLD #11 TO RH INSIDE BULKHEAD) | 1 |
| 33 | 55597 - (KIT) | HOSE ASSY - 187TC81 12-12OS-120S-W - (FLUSH - ROTARY MANIFOLD #7 TO BULKHEAD TEE) | 1 |
| 34 | 55597 - (KIT) | HOSE ASSY - 387TC80 06-06OS-060S-W - (BRAKE - ROTARY MANIFOLD #1 TO BULKHEAD TEE) | 1 |
| 35 | 55597 - (KIT) | HOSE ASSY - 187TC47 08-08OS-0809-W - (CASE DRAIN - BULKHEAD TEE TO RH DRIVE MOTOR) | 1 |
| 36 | 55597 - (KIT) | HOSE ASSY - 387TC34 04-04OS-0409-W - (SHIFT - BULKHEAD TEE TO LH DRIVE MOTOR) | 1 |

# P100-00190 - 9’6” 48L NON-LEVELING LEVELING CARBODY HYD. FITTINGS (RM. TO BULKHEAD TO TRACK MOTORS)

**NOTE: HYDRAULIC FITTINGS GET 545 LOCTITE™**

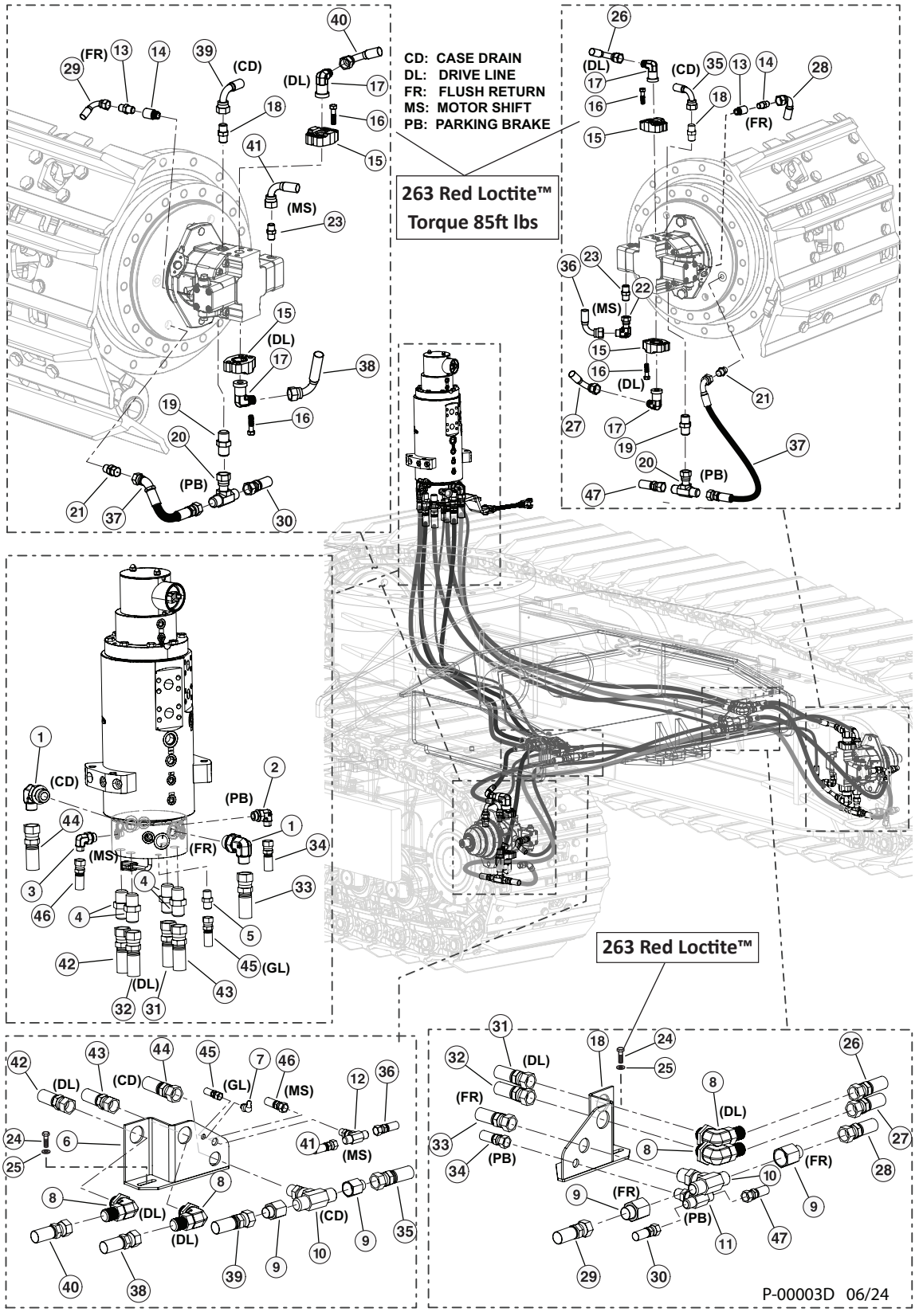

# P100-00190 - 9’6” 48L NON-LEVELING LEVELING CARBODY HYD. FITTINGS (RM. TO BULKHEAD TO TRACK MOTORS)

| Item | Part # | Description | Qty. |
|---|---|---|---|
| | **57458** | **KIT, FITTING - TRACK TRUNK** | 1 |
| | **57968** | **KIT, FITTING - ROTARY MANIFOLD TRACK NL** | 1 |
| | **57456** | **KIT, FITTING - TRACK NL CARBODY** | 1 |
| 37 | 55597 - (KIT) | HOSE ASSY - 387TC22 06-06OS-0604-W - (BRAKE JUMPER - DRIVE MOTOR TO FINAL DRAIVE) | 2 |
| 38 | 55597 - (KIT) | HOSE ASSY - 797TC32 16-16OS-1609-SW - (DRIVE LINE - LEFT INSIDE BULKHEAD TO BOTTOM LH TRACK MOTOR) | 1 |
| 39 | 55597 - (KIT) | HOSE ASSY - 187TC34 08-08OS-0809-W - (CASE DRAIN - BULKHEAD TE TO LH DRIVE MOTOR) | 1 |
| 40 | 55597 - (KIT) | HOSE ASSY - 797TC25 16-16OS-1609-SW - (DRIVE LINE - LH OUTSIDE BULKHEAD TEE TO TOP LH DRIVE MOTOR) | 1 |
| 41 | 55597 - (KIT) | HOSE ASSY - 387TC34 04-04OS-0409-W - (SHIFT - (LEFT MOTOR TO LEFT BULKHEAD TEE) | 1 |
| 42 | 55597 - (KIT) | HOSE ASSY - 797TC73 16-16OS-1604-SW - (DRIVE LINE - ROTARY MANIFOLD #10 TO LEFT BULKHEAD, OUTSIDE) | 1 |
| 43 | 55597 - (KIT) | HOSE ASSY - 797TC77 16-16OS-1604-SW - (DRIVE LINE - ROTARY MANIFOLD #12 TO LEFT BULKHEAD, INSIDE) | 1 |
| 44 | 55597 - (KIT) | HOSE ASSY - 187TC92 12-12OS-120S-W - (CASE DRAIN - ROTARY MANIFOLD #V1 LEFT BULKHEAD) | 1 |
| 45 | 55597 - (KIT) | HOSE ASSY - 387TC84 04-04JS-04JS-W - (GREASE LINE - LEFT BULKHEAD TO ROTARY MANIFOLD) | 1 |
| 46 | 55597 - (KIT) | HOSE ASSY - 387TC85 04-04OS-0409-W - (SHIFT - LEFT BULKHEAD TEE TO RO-TARY MANIFOLD | 1 |
| 47 | 55597 - (KIT) | HOSE ASSY - 387TC48 06-06OS-060S-W - (BRAKE - RIGHT DRIVE MOTOR TEE TO RIGHT BULKHEAD TEE | 1 |

# P100-00200 - 9’6” 48L NON-LEVELING CARBODY HYD. FITTINGS - (FUEL HOSES)

**NOTE: HYDRAULIC FITTINGS GET 545 LOCTITE™**

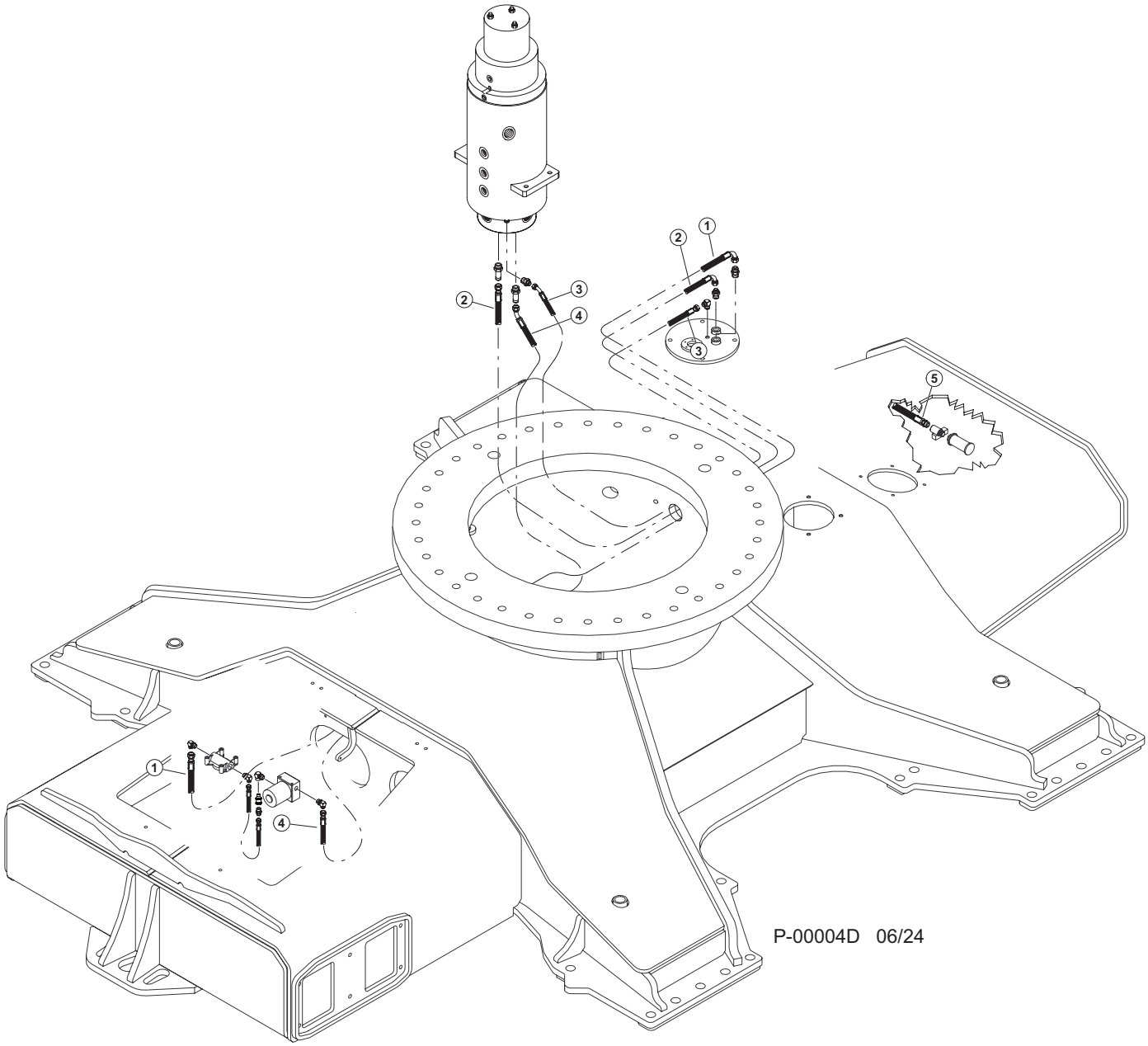

# P100-00200 - 9’6” 48L NON-LEVELING CARBODY HYD. FITTINGS - (FUEL HOSES)

| Item | Part # | Description | Qty. |
|---|---|---|---|
| 1 | 55597 - (KIT) | HOSE ASSY - 221FR77 08-08JS-08J9-W - (FUEL TANK SUPPLY TO FUEL FILTER) | 1 |
| 2 | 55597 - (KIT) | HOSE ASSY - 221FR82 06-06JS-06J9-W - (FUEL RETURN - ROTARY MANIFOLD PORT FR TO FUEL TANK) | 1 |
| 3 | 55597 - (KIT) | HOSE ASSY - 387TC20 04-04OS-04O4-W - (FUEL VENT - FUEL TANK TO ROTARY MANIFOLD PORT FS) | 1 |
| 4 | 55597 - (KIT) | HOSE ASSY - 221FR759 06-06JS-06J4-W - (FUEL PUMP TO ROTARY MANIFOLD) | 1 |
| 5 | 55597 - (KIT) | HOSE ASSY - 1887TC24 08-08MP-0804 - (FUEL SUPPLY IN TANK) | 1 |

# P100-00210 - 10’6” 48L NON-LEVELING LEVELING CARBODY HYD. FITTINGS (RM. TO BULKHEAD TO TRACK MOTORS)

**NOTE: HYDRAULIC FITTINGS GET 545 LOCTITE™**

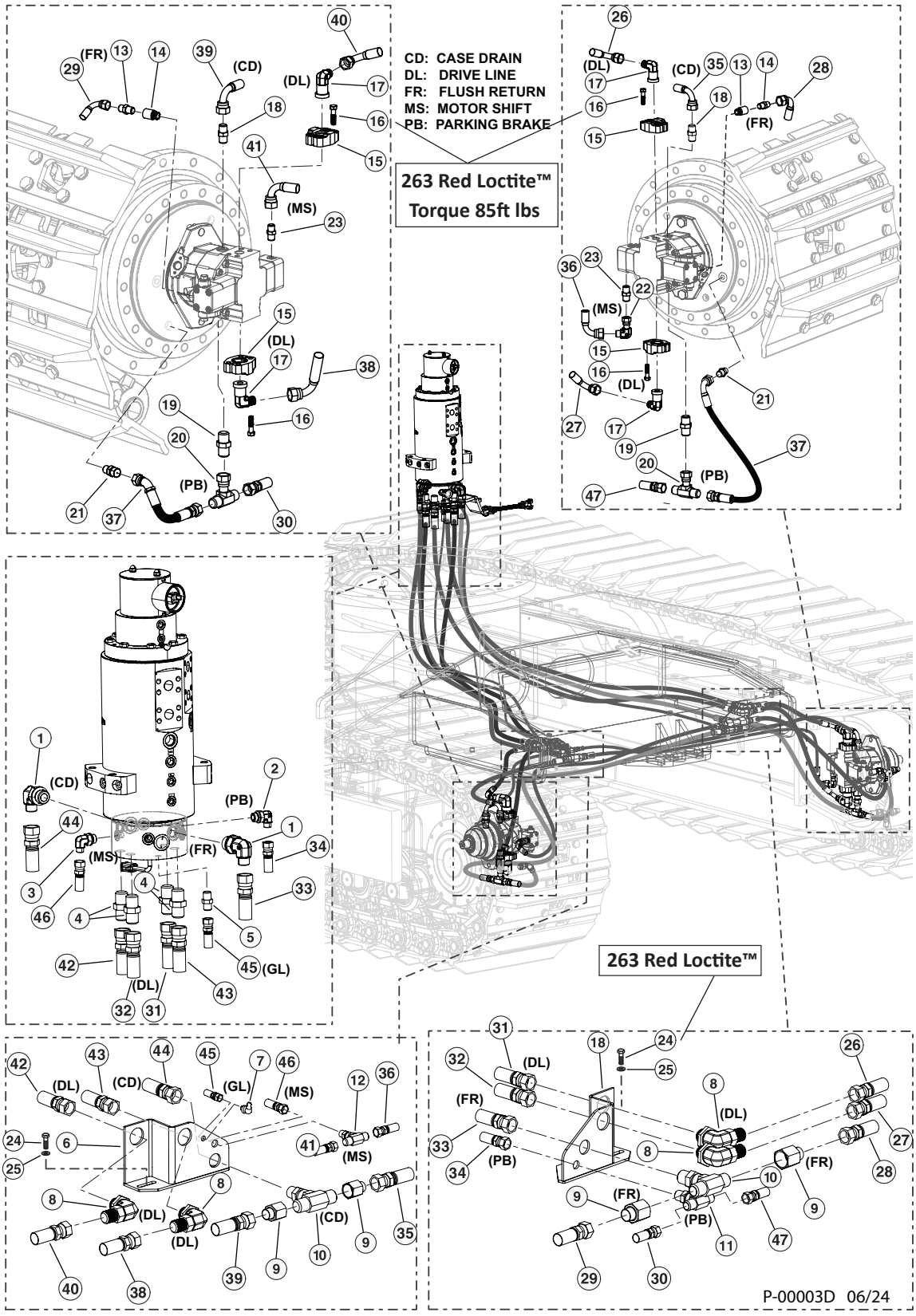

# P100-00210 - 10’6” 48L NON-LEVELING LEVELING CARBODY HYD. FITTINGS (RM. TO BULKHEAD TO TRACK MOTORS)

| Item | Part # | Description | Qty. |
|---|---|---|---|
| | **57458** | **KIT, FITTING - TRACK TRUNK** | 1 |
| | **57968** | **KIT, FITTING - ROTARY MANIFOLD TRACK NL** | 1 |
| | **57456** | **KIT, FITTING - TRACK NL CARBODY** | 1 |
| 1 | 17688 | ELBOW, 90 - FF1868T-1212S | 2 |
| 2 | 15133 | ELBOW, 90 - FF1868T-0406S | 1 |
| 3 | 16296 | ELBOW, 90 - FF1868T-0606S | 1 |
| 4 | 15225 | CONNECTOR, STR - FF1852T-1616S | 4 |
| 5 | 51887 | CONNECTOR, STR - (4F50X-S) | 1 |
| 6 | 53762 | BULKHEAD, TRACK HOSE L.H. | 1 |
| 7 | 15684 | FITTING, GREASE - .125 NPT - 90 | 1 |
| 8 | 53680 | FITTING, BULKHEAD UNION ELBOW 16 WELO-WN | 4 |
| 9 | 18581 | CONNECTOR, REDUCER - ORS FF2281T-0812S | 4 |
| 10 | 53192 | FITTING, BULKHEAD BRANCH TEE- 12 WJLO-WL | 2 |
| 11 | 52902 | TEE, BULKHEAD BRANCH - 6 | 1 |
| 12 | 52901 | TEE, BULKHEAD BRANCH - 4 | 1 |
| 13 | 15117 | CONNECTOR, STR - FF1852T-0808S | 2 |
| 14 | 53651 | FITTING, FLUSHING ORIFICE - TRACK MOTOR | 2 |
| 15 | 58359 | CONNECTOR,FLANGE PAD-W48-16-16U-M12 BLK | 4 |
| 16 | 1139657 | BOLT, M12-1.75 X 45MM L 10MM HEX DRIVE **(TORQUE 85FT LBS) 263 RED LOCTITE™** | 16 |
| 17 | 15228 | ELBOW, 90 - FF1868T-1616S | 4 |
| 18 | 52439 | CONNECTOR, MALE ISO 6149 | 1 |
| 19 | 54795 | CONNECTOR, STR ORIFICED .04” TRACK MOTOR | 2 |
| 20 | 52900 | SWIVEL, NUT BRANCH TEE #6 | 2 |
| 21 | 53124 | FITTING, MALE CONNECTOR ISO 6149 | 2 |
| 22 | 15145 | ELBOW, 90 SWIVEL - FF2098T-0404S | 2 |
| 23 | 53157 | FITTING, CONNECTOR - #4 ORF - 14MM | 2 |
| 24 | 11707 | BOLT - .375” X 1” **263 RED LOCTITE™** | 4 |
| 25 | 15528 | WASHER, SAE FLAT - .375” | 4 |
| 26 | 55595 - (KIT) | HOSE ASSY - 797TC29.5 16-16OS-1609-SW - (BULKHEAD TO RH DRIVE MOTOR - TOP) | 1 |
| 27 | 55595 - (KIT) | HOSE ASSY - 797TC36.5 16-16OS-1609-SW - (BULKHEAD TO RH DRIVE MOTOR - BOTTOM) | 1 |
| 28 | 55595 - (KIT) | HOSE ASSY - 187TC51 08-08OS-0809-W - (FLUSH - BULKHEAD TEE TO RH DM) | 1 |
| 29 | 55595 - (KIT) | HOSE ASSY - 187TC66 08-08OS-0809-W - (FLUSH - BULKHEAD TEE TO LH DM) | 1 |
| 30 | 55595 - (KIT) | HOSE ASSY - 387TC50 06-06OS-060S-W - (BRAKE - BULKHEAD TEE TO RH DM) | 1 |
| 31 | 55595 - (KIT) | HOSE ASSY - 789TC73 16-16OS-1604-SW - (DRIVE LINE - ROTARY MANIFOLD #10 TO LH OUTSIDE BULKHEAD) | 1 |
| 32 | 55595 - (KIT) | HOSE ASSY - 789TC74 16-16OS-1604-SW - (DRIVE LINE - ROTARY MANIFOLD #11 TO RH INSIDE BULKHEAD) | 1 |
| 33 | 55595 - (KIT) | HOSE ASSY - 187TC80 12-12OS-120S-W - (FLUSH - ROTARY MANIFOLD #7 TO BULKHEAD TEE) | 1 |
| 34 | 55595 - (KIT) | HOSE ASSY - 387TC81 06-06OS-060S-W - (BRAKE - ROTARY MANIFOLD #1 TO BULKHEAD TEE) | 1 |
| 35 | 55595 - (KIT) | HOSE ASSY - 187TC51 08-08OS-0809-W - (CASE DRAIN - BULKHEAD TEE TO RH DRIVE MOTOR) | 1 |
| 36 | 55595 - (KIT) | HOSE ASSY - 387TC39 04-04OS-0409-W - (SHIFT - BULKHEAD TEE TO LH DRIVE MOTOR) | 1 |

# P100-00210 - 10’6” 48L NON-LEVELING LEVELING CARBODY HYD. FITTINGS (RM. TO BULKHEAD TO TRACK MOTORS)

**NOTE: HYDRAULIC FITTINGS GET 545 LOCTITE™**

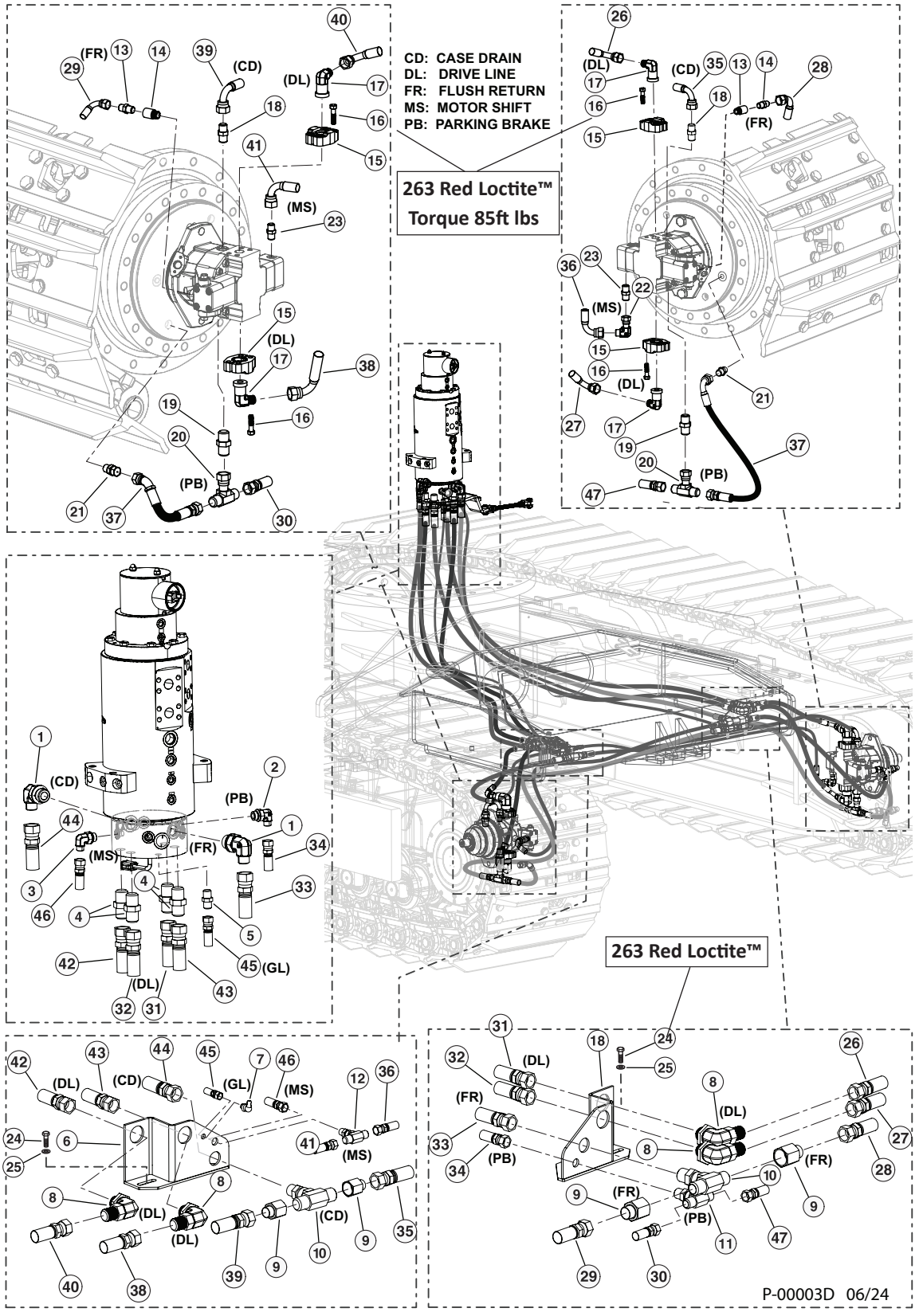

# P100-00210 - 10’6” 48L NON-LEVELING LEVELING CARBODY HYD. FITTINGS (RM. TO BULKHEAD TO TRACK MOTORS)

| Item | Part # | Description | Qty. |
|---|---|---|---|
| | **57458** | **KIT, FITTING - TRACK TRUNK** | 1 |
| | **57968** | **KIT, FITTING - ROTARY MANIFOLD TRACK NL** | 1 |
| | **57456** | **KIT, FITTING - TRACK NL CARBODY** | 1 |
| 37 | 55595 - (KIT) | HOSE ASSY - 387TC22 06-06OS-0604-W - (BRAKE JUMPER - DRIVE MOTOR TO FINAL DRAIVE) | 2 |
| 38 | 55595 - (KIT) | HOSE ASSY - 797TC36.5 16-16OS-1609-SW - (DRIVE LINE - LEFT INSIDE BULKHEAD TO BOTTOM LH TRACK MOTOR) | 1 |
| 39 | 55595 - (KIT) | HOSE ASSY - 187TC39 08-08OS-0809-W - (CASE DRAIN - BULKHEAD TE TO LH DRIVE MOTOR) | 1 |
| 40 | 55595 - (KIT) | HOSE ASSY - 797TC29.5 16-16OS-1609-SW - (DRIVE LINE - LH OUTSIDE BULKHEAD TEE TO TOP LH DRIVE MOTOR) | 1 |
| 41 | 55595 - (KIT) | HOSE ASSY - 387TC39 04-04OS-0409-W - (SHIFT - (LEFT MOTOR TO LEFT BULKHEAD TEE) | 1 |
| 42 | 55595 - (KIT) | HOSE ASSY - 797TC73 16-16OS-1604-SW - (DRIVE LINE - ROTARY MANIFOLD #10 TO LEFT BULKHEAD, OUTSIDE) | 1 |
| 43 | 55595 - (KIT) | HOSE ASSY - 797TC77 16-16OS-1604-SW - (DRIVE LINE - ROTARY MANIFOLD #12 TO LEFT BULKHEAD, INSIDE) | 1 |
| 44 | 55595 - (KIT) | HOSE ASSY - 187TC92 12-12OS-120S-W - (CASE DRAIN - ROTARY MANIFOLD #V1 LEFT BULKHEAD) | 1 |
| 45 | 55595 - (KIT) | HOSE ASSY - 387TC84 04-04JS-04JS-W - (GREASE LINE - LEFT BULKHEAD TO ROTARY MANIFOLD) | 1 |
| 46 | 55595 - (KIT) | HOSE ASSY - 387TC85 04-04OS-0409-W - (SHIFT - LEFT BULKHEAD TEE TO ROTARY MANIFOLD | 1 |
| 47 | 55595 - (KIT) | HOSE ASSY - 387TC50 06-06OS-060S-W - (BRAKE - RIGHT DRIVE MOTOR TEE TO RIGHT BULKHEAD TEE | 1 |

# P100-00220 - 10’6” 48L NON-LEVELING CARBODY HYD. FITTINGS - (FUEL HOSES)

**NOTE: HYDRAULIC FITTINGS GET 545 LOCTITE™**

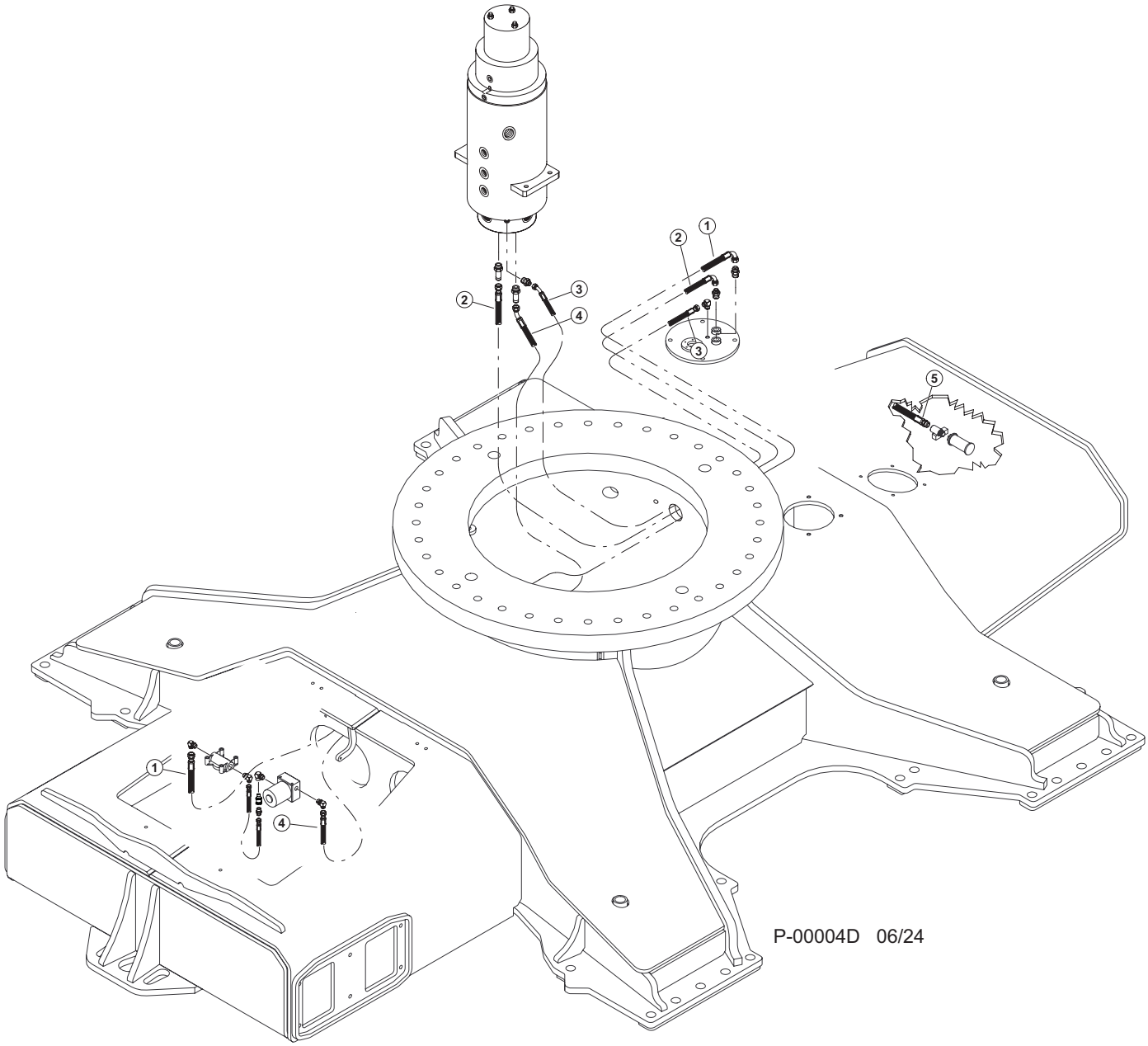




**2233000**
**2232100**

# P100-00220 - 10’6” 48L NON-LEVELING CARBODY HYD. FITTINGS - (FUEL HOSES)

| Item | Part # | Description | Qty. |
|---|---|---|---|
| 1 | 55595 - (KIT) | HOSE ASSY - 221FR77 08-08JS-08J9-W - (FUEL TANK SUPPLY TO FUEL FILTER) | 1 |
| 2 | 55595 - (KIT) | HOSE ASSY - 221FR82 06-06JS-06J9-W - (FUEL RETURN - ROTARY MANIFOLD PORT FR TO FUEL TANK) | 1 |
| 3 | 55595 - (KIT) | HOSE ASSY - 387TC20 04-04OS-04O4-W - (FUEL VENT - FUEL TANK TO ROTARY MANIFOLD PORT FS) | 1 |
| 4 | 55595 - (KIT) | HOSE ASSY - 221FR759 06-06JS-06J4-W - (FUEL PUMPTO ROTARY MANIFOLD) | 1 |
| 5 | 55595 - (KIT) | HOSE ASSY - 1887TC24 08-08MP-0804 - (FUEL SUPPLY IN TANK) | 1 |

# P100-00230 - 9’6” 45L NON-LEVELING LEVELING CARBODY HYD. FITTINGS (RM. TO BULKHEAD TO TRACK MOTORS)

**NOTE: HYDRAULIC FITTINGS GET 545 LOCTITE™**

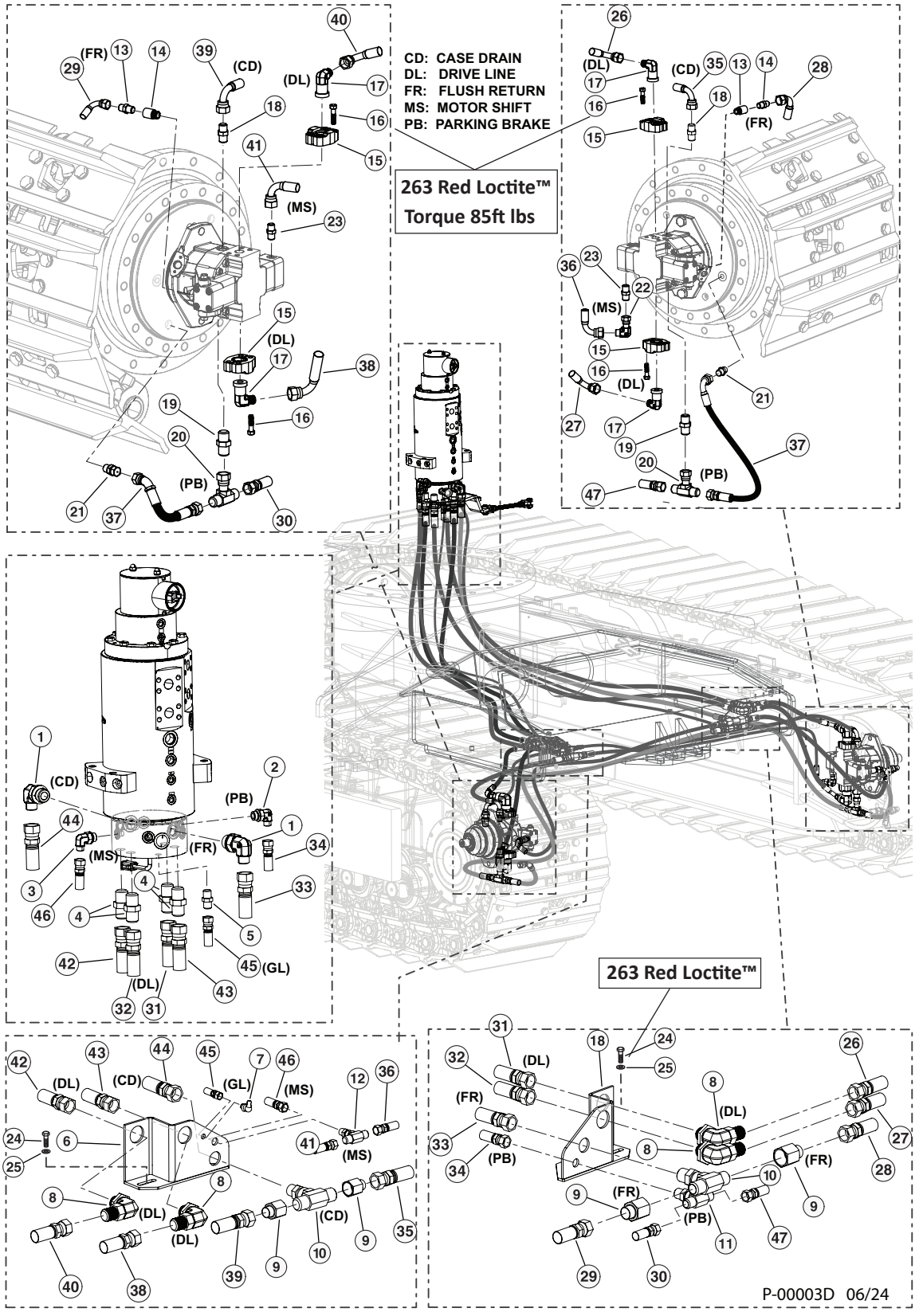




2234100
2233000

# P100-00230 - 9’6” 45L NON-LEVELING LEVELING CARBODY HYD. FITTINGS (RM. TO BULKHEAD TO TRACK MOTORS)

| Item | Part # | Description | Qty. |
|---|---|---|---|
| | **57458** | **KIT, FITTING - TRACK TRUNK** | 1 |
| | **57968** | **KIT, FITTING - ROTARY MANIFOLD TRACK NL** | 1 |
| | **57456** | **KIT, FITTING - TRACK NL CARBODY** | 1 |
| 1 | 17688 | ELBOW, 90 - FF1868T-1212S | 2 |
| 2 | 15133 | ELBOW, 90 - FF1868T-0406S | 1 |
| 3 | 16296 | ELBOW, 90 - FF1868T-0606S | 1 |
| 4 | 15225 | CONNECTOR, STR - FF1852T-1616S | 4 |
| 5 | 51887 | CONNECTOR, STR - (4F50X-S) | 1 |
| 6 | 53762 | BULKHEAD, TRACK HOSE L.H. | 1 |
| 7 | 15684 | FITTING, GREASE - .125 NPT - 90 | 1 |
| 8 | 53680 | FITTING, BULKHEAD UNION ELBOW 16 WELO-WN | 4 |
| 9 | 18581 | CONNECTOR, REDUCER - ORS FF2281T-0812S | 4 |
| 10 | 53192 | FITTING, BULKHEAD BRANCH TEE- 12 WJLO-WL | 2 |
| 11 | 52902 | TEE, BULKHEAD BRANCH - 6 | 1 |
| 12 | 52901 | TEE, BULKHEAD BRANCH - 4 | 1 |
| 13 | 15117 | CONNECTOR, STR - FF1852T-0808S | 2 |
| 14 | 53651 | FITTING, FLUSHING ORIFICE - TRACK MOTOR | 2 |
| 15 | 58359 | CONNECTOR,FLANGE PAD-W48-16-16U-M12 BLK | 4 |
| 16 | 1139657 | BOLT, M12-1.75 X 45MM L 10MM HEX DRIVE **(TORQUE 85FT LBS) 263 RED LOCTITE™** | 16 |
| 17 | 15228 | ELBOW, 90 - FF1868T-1616S | 4 |
| 18 | 52439 | CONNECTOR, MALE ISO 6149 | 1 |
| 19 | 54795 | CONNECTOR, STR ORIFICED .04” TRACK MOTOR | 2 |
| 20 | 52900 | SWIVEL, NUT BRANCH TEE #6 | 2 |
| 21 | 53124 | FITTING, MALE CONNECTOR ISO 6149 | 2 |
| 22 | 15145 | ELBOW, 90 SWIVEL - FF2098T-0404S | 2 |
| 23 | 53157 | FITTING, CONNECTOR - #4 ORF - 14MM | 2 |
| 24 | 11707 | BOLT - .375” X 1” **263 RED LOCTITE™** | 4 |
| 25 | 15528 | WASHER, SAE FLAT - .375” | 4 |
| 26 | 55594 - (KIT) | HOSE ASSY - 797TC25 16-16OS-1609-SW - (BULKHEAD TO RH DRIVE MOTOR - TOP) | 1 |
| 27 | 55594 - (KIT) | HOSE ASSY - 797TC32 16-16OS-1609-SW - (BULKHEAD TO RH DRIVE MOTOR - BOTTOM) | 1 |
| 28 | 55594 - (KIT) | HOSE ASSY - 187TC49 08-08OS-0809-W - (FLUSH - BULKHEAD TEE TO RH DM) | 1 |
| 29 | 55594 - (KIT) | HOSE ASSY - 187TC61 08-08OS-0809-W - (FLUSH - BULKHEAD TEE TO LH DM) | 1 |
| 30 | 55594 - (KIT) | HOSE ASSY - 387TC46 06-06OS-060S-W - (BRAKE - BULKHEAD TEE TO RH DM) | 1 |
| 31 | 55594 - (KIT) | HOSE ASSY - 789TC68 16-16OS-1604-SW - (DRIVE LINE - ROTARY MANIFOLD #10 TO LH OUTSIDE BULKHEAD) | 1 |
| 32 | 55594 - (KIT) | HOSE ASSY - 789TC69 16-16OS-1604-SW - (DRIVE LINE - ROTARY MANIFOLD #11 TO RH INSIDE BULKHEAD) | 1 |
| 33 | 55594 - (KIT) | HOSE ASSY - 187TC76 12-12OS-120S-W - (FLUSH - ROTARY MANIFOLD #7 TO BULKHEAD TEE) | 1 |
| 34 | 55594 - (KIT) | HOSE ASSY - 387TC76 06-06OS-060S-W - (BRAKE - ROTARY MANIFOLD #1 TO BULKHEAD TEE) | 1 |
| 35 | 55594 - (KIT) | HOSE ASSY - 187TC47 08-08OS-0809-W - (CASE DRAIN - BULKHEAD TEE TO RH DRIVE MOTOR) | 1 |
| 36 | 55594 - (KIT) | HOSE ASSY - 387TC34 04-04OS-0409-W - (SHIFT - BULKHEAD TEE TO LH DRIVE MOTOR) | 1 |

# P100-00230 - 9’6” 45L NON-LEVELING LEVELING CARBODY HYD. FITTINGS (RM. TO BULKHEAD TO TRACK MOTORS) - (RM. TO BULKHEAD TO TRACK MOTORS)

**NOTE: HYDRAULIC FITTINGS GET 545 LOCTITE™**

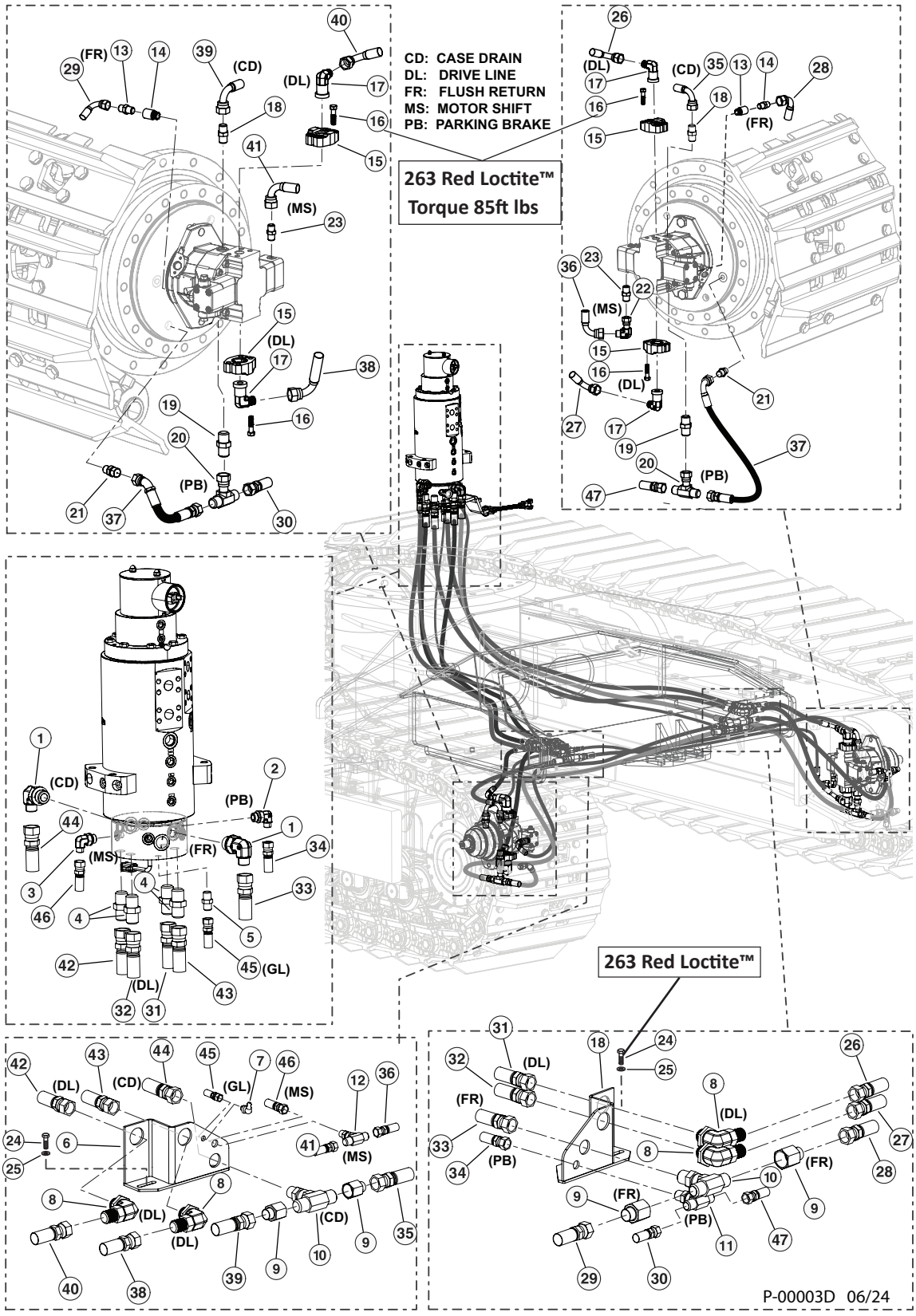




2234100
2232100

# P100-00230 - 9’6” 45L NON-LEVELING LEVELING CARBODY HYD. FITTINGS (RM. TO BULKHEAD TO TRACK MOTORS) - (RM. TO BULKHEAD TO TRACK MOTORS)

| Item | Part # | Description | Qty. |
|---|---|---|---|
| | **57458** | **KIT, FITTING - TRACK TRUNK** | 1 |
| | **57968** | **KIT, FITTING - ROTARY MANIFOLD TRACK NL** | 1 |
| | **57456** | **KIT, FITTING - TRACK NL CARBODY** | 1 |
| 37 | 55594 - (KIT) | HOSE ASSY - 387TC22 06-06OS-0604-W - (BRAKE JUMPER - DRIVE MOTOR TO FINAL DRAIVE) | 2 |
| 38 | 55594 - (KIT) | HOSE ASSY - 797TC32 16-16OS-1609-SW - (DRIVE LINE - LEFT INSIDE BULKHEAD TO BOTTOM LH TRACK MOTOR) | 1 |
| 39 | 55594 - (KIT) | HOSE ASSY - 187TC34 08-08OS-0809-W - (CASE DRAIN - BULKHEAD TE TO LH DRIVE MOTOR) | 1 |
| 40 | 55594 - (KIT) | HOSE ASSY - 797TC25 16-16OS-1609-SW - (DRIVE LINE - LH OUTSIDE BULKHEAD TEE TO TOP LH DRIVE MOTOR) | 1 |
| 41 | 55594 - (KIT) | HOSE ASSY - 387TC34 04-04OS-0409-W - (SHIFT - (LEFT MOTOR TO LEFT BULKHEAD TEE) | 1 |
| 42 | 55594 - (KIT) | HOSE ASSY - 797TC68 16-16OS-1604-SW - (DRIVE LINE - ROTARY MANIFOLD #10 TO LEFT BULKHEAD, OUTSIDE) | 1 |
| 43 | 55594 - (KIT) | HOSE ASSY - 797TC72 16-16OS-1604-SW - (DRIVE LINE - ROTARY MANIFOLD #12 TO LEFT BULKHEAD, INSIDE) | 1 |
| 44 | 55594 - (KIT) | HOSE ASSY - 187TC86 12-12OS-120S-W - (CASE DRAIN - ROTARY MANIFOLD #V1 LEFT BULKHEAD) | 1 |
| 45 | 55594 - (KIT) | HOSE ASSY - 387TC76 04-04JS-04JS-W - (GREASE LINE - LEFT BULKHEAD TO ROTARY MANIFOLD) | 1 |
| 46 | 55594 - (KIT) | HOSE ASSY - 387TC80 04-04OS-0409-W - (SHIFT - LEFT BULKHEAD TEE TO ROTARY MANIFOLD | 1 |
| 47 | 55594 - (KIT) | HOSE ASSY - 387TC46 06-06OS-060S-W - (BRAKE - RIGHT DRIVE MOTOR TEE TO RIGHT BULKHEAD TEE | 1 |

# P100-00240 - 9’6” 45L NON-LEVELING CARBODY HYD. FITTINGS - (FUEL HOSES)

**NOTE: HYDRAULIC FITTINGS GET 545 LOCTITE™**

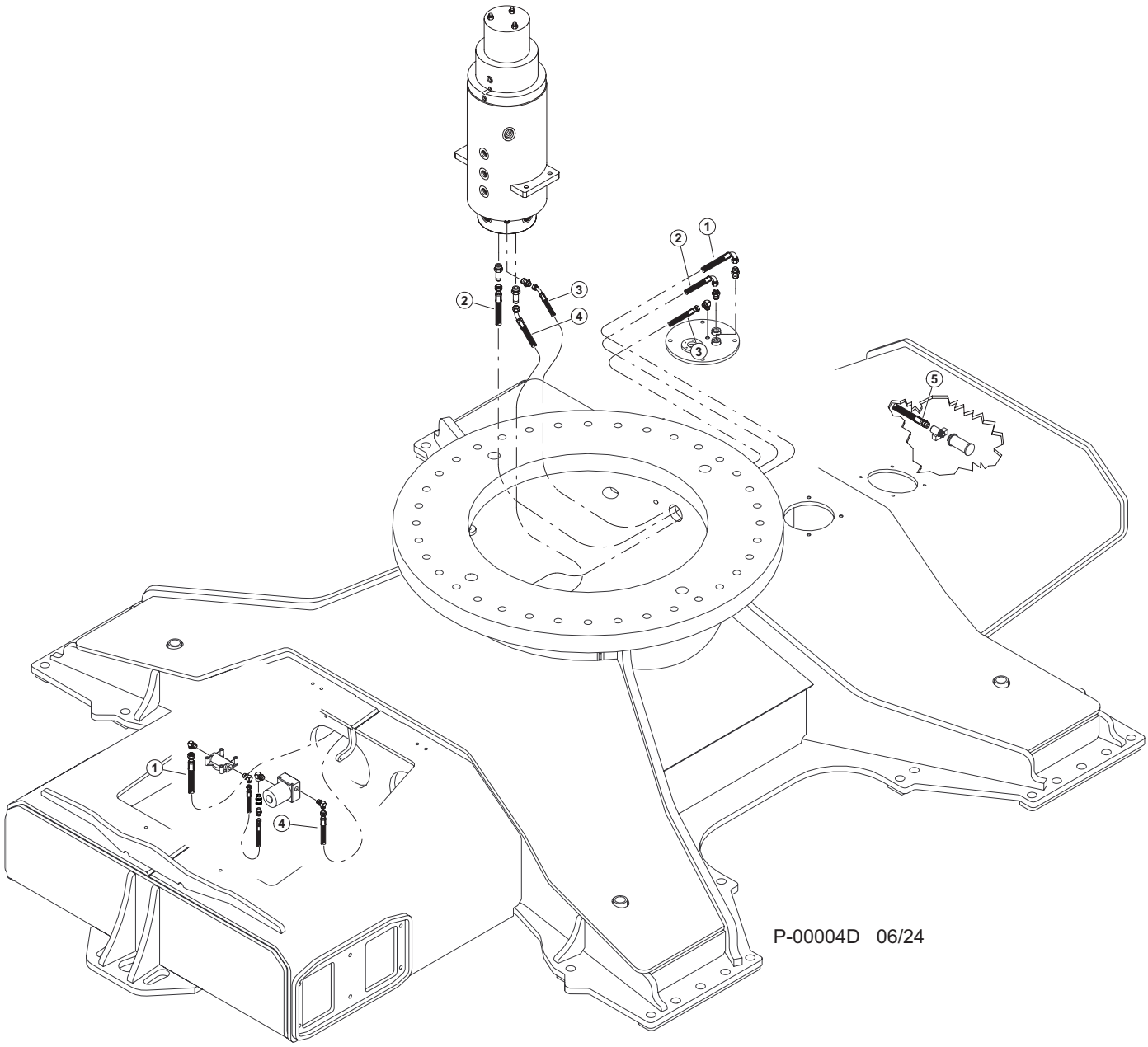




**2234100**
**2232100**

# P100-00240 - 9’6” 45L NON-LEVELING CARBODY HYD. FITTINGS - (FUEL HOSES)

| Item | Part # | Description | Qty. |
|---|---|---|---|
| 1 | 55594 - (KIT) | HOSE ASSY - 221FR77 08-08JS-08J9-W - (FUEL TANK SUPPLY TO FUEL FILTER) | 1 |
| 2 | 55594 - (KIT) | HOSE ASSY - 221FR82 06-06JS-06J9-W - (FUEL RETURN - ROTARY MANIFOLD PORT FR TO FUEL TANK) | 1 |
| 3 | 55594 - (KIT) | HOSE ASSY - 387TC20 04-04OS-04O4-W - (FUEL VENT - FUEL TANK TO ROTARY MANIFOLD PORT FS) | 1 |
| 4 | 55594 - (KIT) | HOSE ASSY - 221FR759 06-06JS-06J4-W - (FUEL PUMP TO ROTARY MANIFOLD) | 1 |
| 5 | 55594 - (KIT) | HOSE ASSY - 1887TC24 08-08MP-0804 - (FUEL SUPPLY IN TANK) | 1 |

# P100-00250 - 10’6” 45L NON-LEVELING LEVELING CARBODY HYD. FITTINGS (RM. TO BULKHEAD TO TRACK MOTORS)

**NOTE: HYDRAULIC FITTINGS GET 545 LOCTITE™**

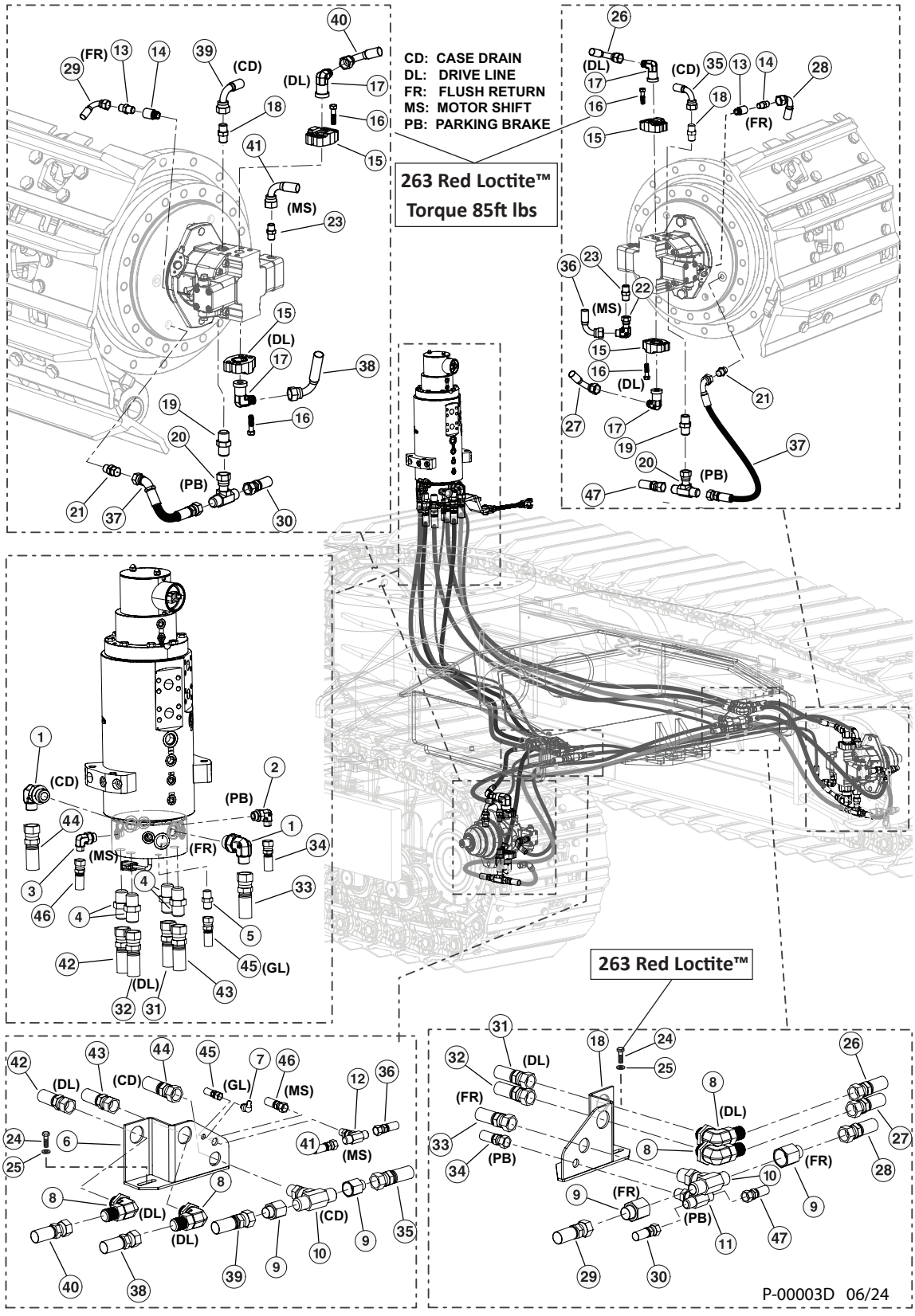

# P100-00250 - 10’6” 45L NON-LEVELING LEVELING CARBODY HYD. FITTINGS (RM. TO BULKHEAD TO TRACK MOTORS)

| Item | Part # | Description | Qty. |
|---|---|---|---|
| | **57458** | **KIT, FITTING - TRACK TRUNK** | 1 |
| | **57968** | **KIT, FITTING - ROTARY MANIFOLD TRACK NL** | 1 |
| | **57456** | **KIT, FITTING - TRACK NL CARBODY** | 1 |
| 1 | 17688 | ELBOW, 90 - FF1868T-1212S | 2 |
| 2 | 15133 | ELBOW, 90 - FF1868T-0406S | 1 |
| 3 | 16296 | ELBOW, 90 - FF1868T-0606S | 1 |
| 4 | 15225 | CONNECTOR, STR - FF1852T-1616S | 4 |
| 5 | 51887 | CONNECTOR, STR - (4F50X-S) | 1 |
| 6 | 53762 | BULKHEAD, TRACK HOSE L.H. | 1 |
| 7 | 15684 | FITTING, GREASE - .125 NPT - 90 | 1 |
| 8 | 53680 | FITTING, BULKHEAD UNION ELBOW 16 WELO-WN | 4 |
| 9 | 18581 | CONNECTOR, REDUCER - ORS FF2281T-0812S | 4 |
| 10 | 53192 | FITTING, BULKHEAD BRANCH TEE- 12 WJLO-WL | 2 |
| 11 | 52902 | TEE, BULKHEAD BRANCH - 6 | 1 |
| 12 | 52901 | TEE, BULKHEAD BRANCH - 4 | 1 |
| 13 | 15117 | CONNECTOR, STR - FF1852T-0808S | 2 |
| 14 | 53651 | FITTING, FLUSHING ORIFICE - TRACK MOTOR | 2 |
| 15 | 58359 | CONNECTOR,FLANGE PAD-W48-16-16U-M12 BLK | 4 |
| 16 | 1139657 | BOLT, M12-1.75 X 45MM L 10MM HEX DRIVE **(TORQUE 85FT LBS) 263 RED LOCTITE™** | 16 |
| 17 | 15228 | ELBOW, 90 - FF1868T-1616S | 4 |
| 18 | 52439 | CONNECTOR, MALE ISO 6149 | 1 |
| 19 | 54795 | CONNECTOR, STR ORIFICED .04” TRACK MOTOR | 2 |
| 20 | 52900 | SWIVEL, NUT BRANCH TEE #6 | 2 |
| 21 | 53124 | FITTING, MALE CONNECTOR ISO 6149 | 2 |
| 22 | 15145 | ELBOW, 90 SWIVEL - FF2098T-0404S | 2 |
| 23 | 53157 | FITTING, CONNECTOR - #4 ORF - 14MM | 2 |
| 24 | 11707 | BOLT - .375” X 1” **263 RED LOCTITE™** | 4 |
| 25 | 15528 | WASHER, SAE FLAT - .375” | 4 |
| 26 | 55596 - (KIT) | HOSE ASSY - 797TC29.5 16-16OS-1609-SW - (BULKHEAD TO RH DRIVE MOTOR - TOP) | 1 |
| 27 | 55596 - (KIT) | HOSE ASSY - 797TC36.5 16-16OS-1609-SW - (BULKHEAD TO RH DRIVE MOTOR - BOTTOM) | 1 |
| 28 | 55596 - (KIT) | HOSE ASSY - 187TC54 08-08OS-0809-W - (FLUSH - BULKHEAD TEE TO RH DM) | 1 |
| 29 | 55596 - (KIT) | HOSE ASSY - 187TC66 08-08OS-0809-W - (FLUSH - BULKHEAD TEE TO LH DM) | 1 |
| 30 | 55596 - (KIT) | HOSE ASSY - 387TC51 06-06OS-060S-W - (BRAKE - BULKHEAD TEE TO RH DM) | 1 |
| 31 | 55596 - (KIT) | HOSE ASSY - 789TC68 16-16OS-1604-SW - (DRIVE LINE - ROTARY MANIFOLD #10 TO LH OUTSIDE BULKHEAD) | 1 |
| 32 | 55596 - (KIT) | HOSE ASSY - 789TC71 16-16OS-1604-SW - (DRIVE LINE - ROTARY MANIFOLD #11 TO RH INSIDE BULKHEAD) | 1 |
| 33 | 55596 - (KIT) | HOSE ASSY - 187TC83 12-12OS-120S-W - (FLUSH - ROTARY MANIFOLD #7 TO BULKHEAD TEE) | 1 |
| 34 | 55596 - (KIT) | HOSE ASSY - 387TC85 06-06OS-060S-W - (BRAKE - ROTARY MANIFOLD #1 TO BULKHEAD TEE) | 1 |
| 35 | 55596 - (KIT) | HOSE ASSY - 187TC51 08-08OS-0809-W - (CASE DRAIN - BULKHEAD TEE TO RH DRIVE MOTOR) | 1 |
| 36 | 55596 - (KIT) | HOSE ASSY - 387TC39 04-04OS-0409-W - (SHIFT - BULKHEAD TEE TO LH DRIVE MOTOR) | 1 |

# P100-00250 - 10’6” 45L NON-LEVELING LEVELING CARBODY HYD. FITTINGS (RM. TO BULKHEAD TO TRACK MOTORS)

**NOTE: HYDRAULIC FITTINGS GET 545 LOCTITE™**

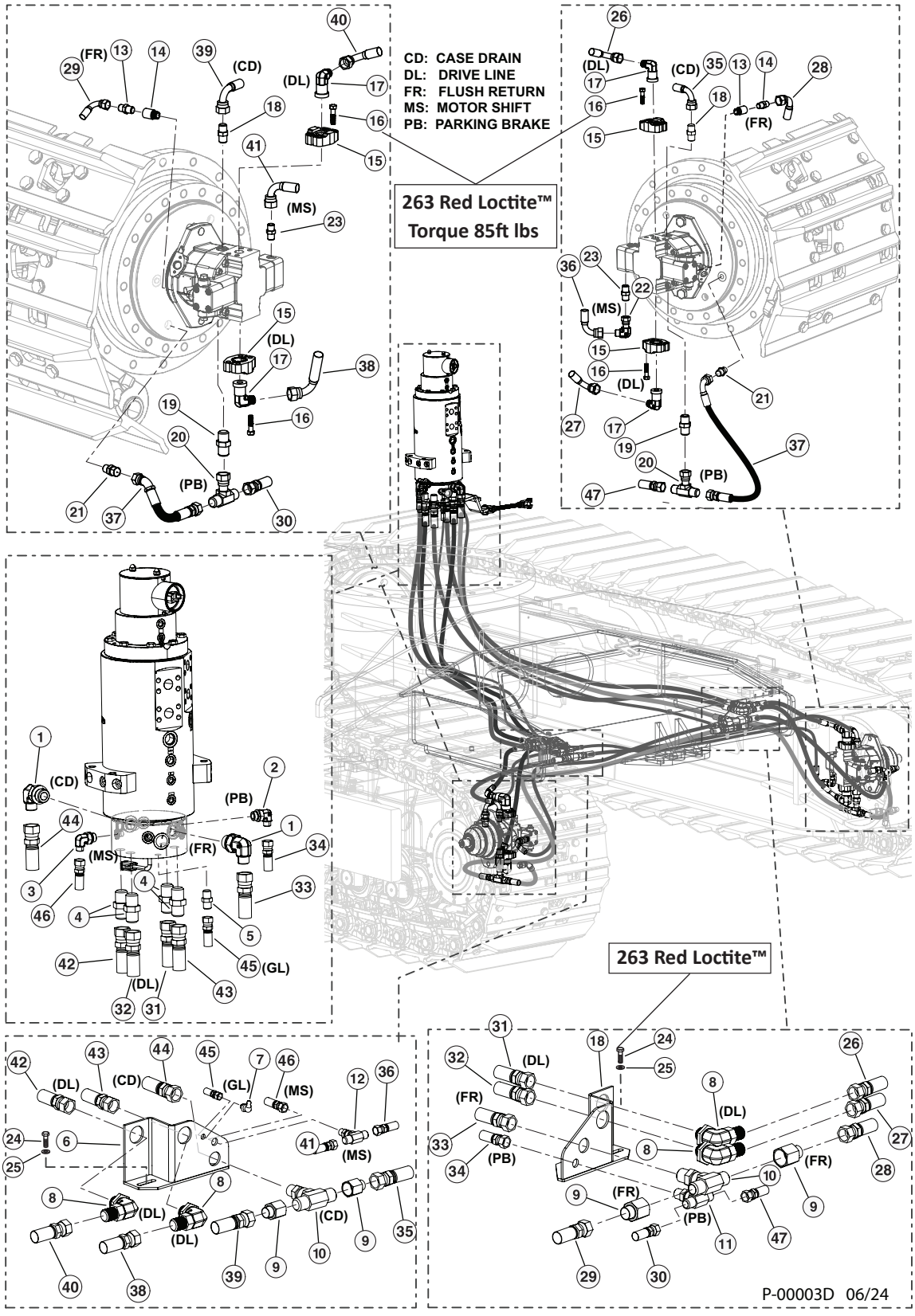

# P100-00250 - 10’6” 45L NON-LEVELING LEVELING CARBODY HYD. FITTINGS (RM. TO BULKHEAD TO TRACK MOTORS)

| Item | Part # | Description | Qty. |
|---|---|---|---|
| | **57458** | **KIT, FITTING - TRACK TRUNK** | 1 |
| | **57968** | **KIT, FITTING - ROTARY MANIFOLD TRACK NL** | 1 |
| | **57456** | **KIT, FITTING - TRACK NL CARBODY** | 1 |
| 37 | 55596 - (KIT) | HOSE ASSY - 387TC22 06-06OS-0604-W - (BRAKE JUMPER - DRIVE MOTOR TO FINAL DRAIVE) | 2 |
| 38 | 55596 - (KIT) | HOSE ASSY - 797TC36.5 16-16OS-1609-SW - (DRIVE LINE - LEFT INSIDE BULKHEAD TO BOTTOM LH TRACK MOTOR) | 1 |
| 39 | 55596 - (KIT) | HOSE ASSY - 187TC39 08-08OS-0809-W - (CASE DRAIN - BULKHEAD TE TO LH DRIVE MOTOR) | 1 |
| 40 | 55596 - (KIT) | HOSE ASSY - 797TC29.5 16-16OS-1609-SW - (DRIVE LINE - LH OUTSIDE BULKHEAD TEE TO TOP LH DRIVE MOTOR) | 1 |
| 41 | 55596 - (KIT) | HOSE ASSY - 387TC39 04-04OS-0409-W - (SHIFT - (LEFT MOTOR TO LEFT BULKHEAD TEE) | 1 |
| 42 | 55596 - (KIT) | HOSE ASSY - 797TC68 16-16OS-1604-SW - (DRIVE LINE - ROTARY MANIFOLD #10 TO LEFT BULKHEAD, OUTSIDE) | 1 |
| 43 | 55596 - (KIT) | HOSE ASSY - 797TC69 16-16OS-1604-SW - (DRIVE LINE - ROTARY MANIFOLD #12 TO LEFT BULKHEAD, INSIDE) | 1 |
| 44 | 55596 - (KIT) | HOSE ASSY - 187TC85 12-12OS-120S-W - (CASE DRAIN - ROTARY MANIFOLD #V1 LEFT BULKHEAD) | 1 |
| 45 | 55596 - (KIT) | HOSE ASSY - 387TC83 04-04JS-04JS-W - (GREASE LINE - LEFT BULKHEAD TO ROTARY MANIFOLD) | 1 |
| 46 | 55596 - (KIT) | HOSE ASSY - 387TC76 04-04OS-0409-W - (SHIFT - LEFT BULKHEAD TEE TO ROTARY MANIFOLD | 1 |
| 47 | 55596 - (KIT) | HOSE ASSY - 387TC51 06-06OS-060S-W - (BRAKE - RIGHT DRIVE MOTOR TEE TO RIGHT BULKHEAD TEE | 1 |

# P100-00255 - U/C HYD. HOSE U, 10_6 CARBODY, NL - 45L C/B - TN735 - TRACK DRIVE HOSES

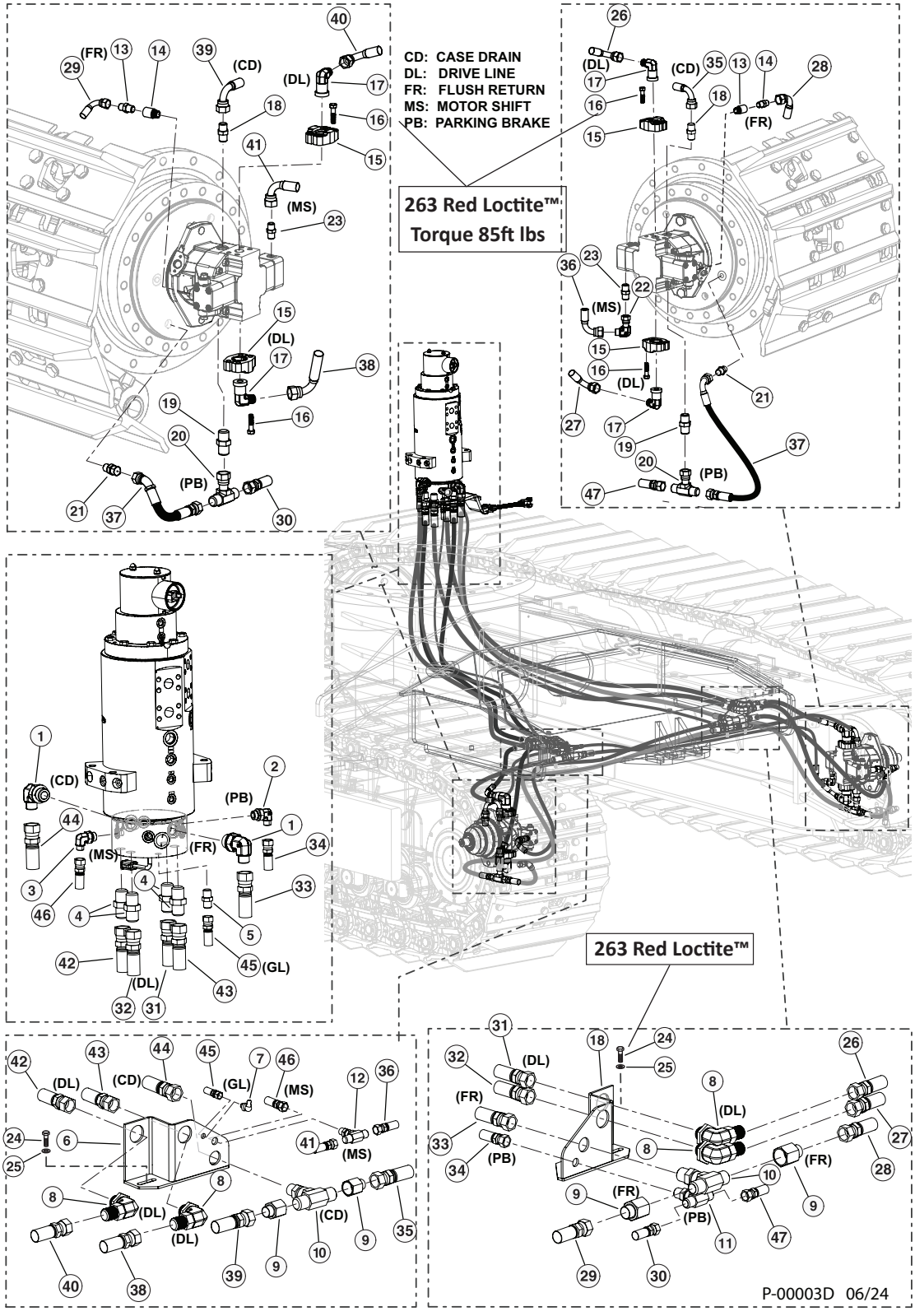

# P100-00255 - U/C HYD. HOSE U, 10_6 CARBODY, NL - 45L C/B - TN735 - TRACK DRIVE HOSES

| Item | Part # | Description | Qty. |
|---|---|---|---|
| | **57458** | **KIT, FITTING - TRACK TRUNK** | 1 |
| | **57968** | **KIT, FITTING - ROTARY MANIFOLD TRACK NL** | 1 |
| | **57456** | **KIT, FITTING - TRACK NL CARBODY** | 1 |
| 1 | 17688 | ELBOW, 90 - FF1868T-1212S | 2 |
| 2 | 15133 | ELBOW, 90 - FF1868T-0406S | 1 |
| 3 | 16296 | ELBOW, 90 - FF1868T-0606S | 1 |
| 4 | 15225 | CONNECTOR, STR - FF1852T-1616S | 4 |
| 5 | 51887 | CONNECTOR, STR - (4F50X-S) | 1 |
| 6 | 53762 | BULKHEAD, TRACK HOSE L.H. | 1 |
| 7 | 15684 | FITTING, GREASE - .125 NPT - 90 | 1 |
| 8 | 53680 | FITTING, BULKHEAD UNION ELBOW 16 WELO-WN | 4 |
| 9 | 18581 | CONNECTOR, REDUCER - ORS FF2281T-0812S | 4 |
| 10 | 53192 | FITTING, BULKHEAD BRANCH TEE- 12 WJLO-WL | 2 |
| 11 | 52902 | TEE, BULKHEAD BRANCH - 6 | 1 |
| 12 | 52901 | TEE, BULKHEAD BRANCH - 4 | 1 |
| 13 | 15117 | CONNECTOR, STR - FF1852T-0808S | 2 |
| 14 | 53651 | FITTING, FLUSHING ORIFICE - TRACK MOTOR | 2 |
| 15 | 58359 | CONNECTOR,FLANGE PAD-W48-16-16U-M12 BLK | 4 |
| 16 | (CALL) | BOLT, M12-1.75 X 45MM L 10MM HEX DRIVE **(TORQUE 85FT LBS) 263 RED LOCTITE™** | 16 |
| 17 | 15228 | ELBOW, 90 - FF1868T-1616S | 4 |
| 18 | 52439 | CONNECTOR, MALE ISO 6149 | 1 |
| 19 | 54795 | CONNECTOR, STR ORIFICED .04” TRACK MOTOR | 2 |
| 20 | 52900 | SWIVEL, NUT BRANCH TEE #6 | 2 |
| 21 | 53124 | FITTING, MALE CONNECTOR ISO 6149 | 2 |
| 22 | 15145 | ELBOW, 90 SWIVEL - FF2098T-0404S | 2 |
| 23 | 53157 | FITTING, CONNECTOR - #4 ORF - 14MM | 2 |
| 24 | 11707 | BOLT - .375” X 1” **263 RED LOCTITE™** | 4 |
| 25 | 15228 | ELBOW, 90 - FF1868T-1616S | 4 |

# P100-00255 - U/C HYD. HOSE U, 10_6 CARBODY, NL - 45L C/B - TN735 - TRACK DRIVE HOSES

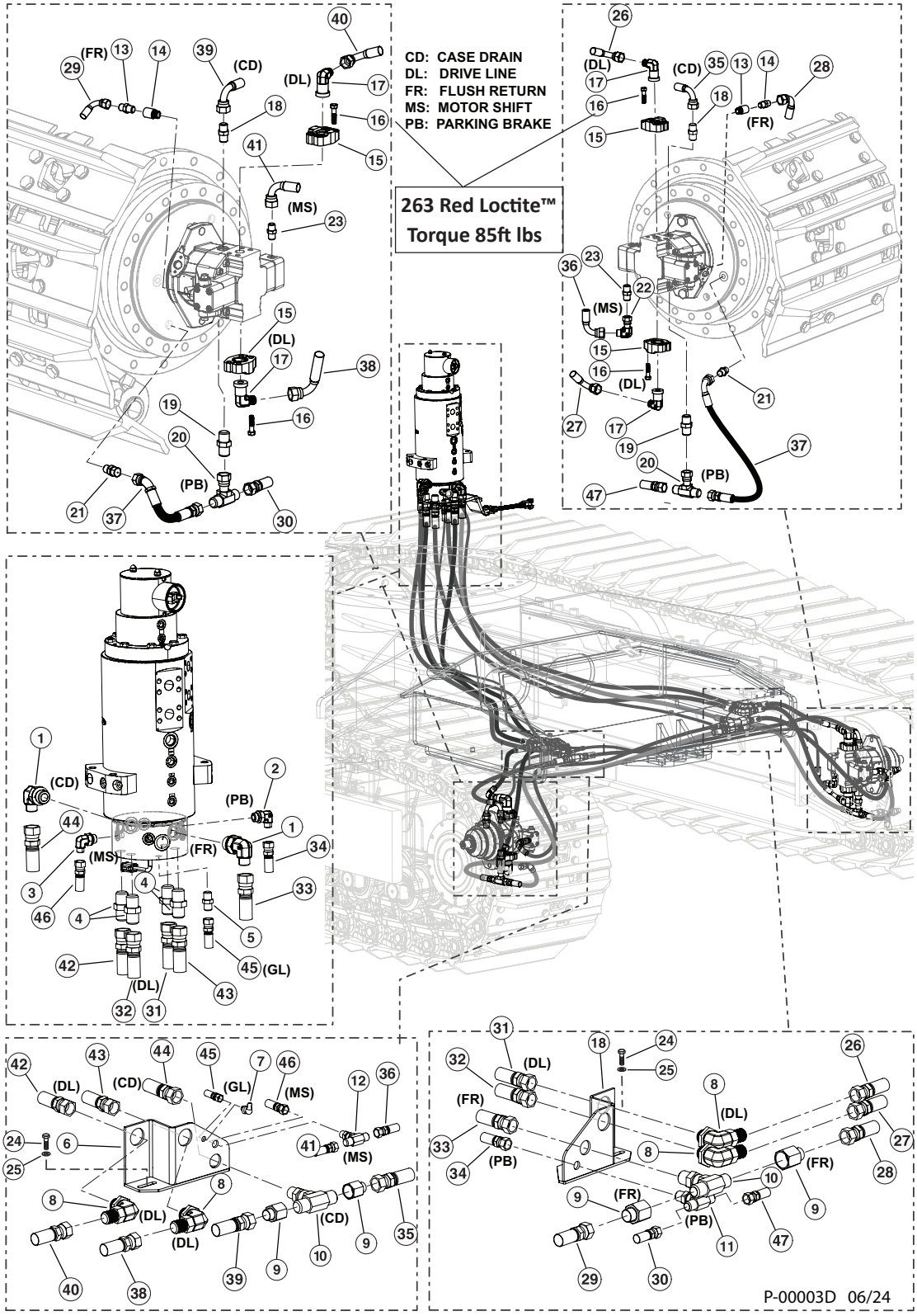

# P100-00255 - U/C HYD. HOSE U, 10_6 CARBODY, NL - 45L C/B - TN735 - TRACK DRIVE HOSES

| Item | Part | Description | Qty. |
|---|---|---|---|
| 26 | 55596 - (KIT) | HOSE ASSY - 797TC29.5 16-16OS-16O9-SW - (BULKHEAD TO RH DRIVE MOTOR - TOP) | 1 |
| 27 | 55596 - (KIT) | HOSE ASSY - 797TC36.5 16-16OS-16O9-SW - (BULKHEAD TO RH DRIVE MOTOR - BOTTOM) | 28 |
| 28 | 55596 - (KIT) | HOSE ASSY - 797TC54 08-08OS-08O9-W - (FLUSH - BULKHEAD TEE TO RH DRIVE MOTOR) | 1 |
| 29 | 55596 - (KIT) | HOSE ASSY - 797TC66 08-08OS-08O9-W - (FLUSH - BULKHEAD TEE TO LH DRIVE MOTOR) | 1 |
| 30 | 55596 - (KIT) | HOSE ASSY - 797TC64 06-06OS-08O6-W - (BRAKE - BULKHEAD TEE TO LH DRIVE MOTOR) | 1 |
| 31 | 55596 - (KIT) | HOSE ASSY - 797TC68 16-016OS-16OS-SW - (DRIVE LINE - ROTARY MANIFOLD #9 TO RH OUTSIDE BULKHEAD) | 1 |
| 32 | 55596 - (KIT) | HOSE ASSY - 797TC71 16-016OS-16O4-SW - (DRIVE LINE - ROTARY MANIFOLD #11 TO RH INSIDE BULKHEAD) | 1 |
| 33 | 55596 - (KIT) | HOSE ASSY - 797TC83 12-12OS-12OS-W - (FLUSH - ROTARY MANIFOLD #7 TO BULKHEAD TEE) | 1 |
| 34 | 55596 - (KIT) | HOSE ASSY - 797TC85 06-06OS-06OS-W - (BRAKE - ROTARY MANIFOLD #1 TO BULKHEAD TEE) | 1 |
| 35 | 55596 - (KIT) | HOSE ASSY - 797TC51 08-08OS-08O9-W - (CASE DRAIN - BULKHEAD TEE TO RH DRIVE MOTOR) | 1 |
| 36 | 55596 - (KIT) | HOSE ASSY - 797TC54 04-04OS-04O9-W - (SHIFT - BULKHEAD TEE TO RH DRIVE MOTOR) | 1 |
| 37 | 55596 - (KIT) | HOSE ASSY - 387TC22 06-06OS-06O4 - (BRAKE JUMPER - DRIVE MOTOR TO FINAL DRIVE) BOTTOM LH TRACK MOTOR) | 1 |
| 38 | 55596 - (KIT) | HOSE ASSY - 797TC36.5 16-16OS-16O9-SW - (DRIVE LINE - LEFT INSIDE BULKHEAD TO | 1 |
| 39 | 55596 - (KIT) | HOSE ASSY - 187TC39 08-08OS-08O9-W - (CASE DRAIN - BULKHEAD TO LH TRACK MOTOR) | 1 |
| 40 | 55596 - (KIT) | HOSE ASSY - 797TC29.5 16-16OS-16O9-SW - (DRIVE LINE - LH OUTSIDE BULKHEAD TEE TO TOP LH TRACK MOTOR) | 1 |
| 41 | 55596 - (KIT) | HOSE ASSY - 387TC39 04-04OS-04OS-W - (SHIFT - LH TRACK MOTOR TO LH BULKHEAD TEE) | 1 |
| 42 | 55596 - (KIT) | HOSE ASSY - 797TC68 16-16OS-16O4-SW - (DRIVE LINE - ROTARY MANIFOLD #10 TO LH BULKHEAD, OUTSIDE) | 1 |
| 43 | 55596 - (KIT) | HOSE ASSY - 797TC69 16-16OS-16OS-SW - (DRIVE LINE - ROTARY MANIFOLD 12 TO LH BULKHEAD, INSIDE) | 1 |
| 44 | 55596 - (KIT) | HOSE ASSY - 187TC88 12-12OS-12OS-W - (CASE DRAIN - ROTARY MANIFOLD V1 TO LH BULKHEAD) | 1 |
| 45 | 55596 - (KIT) | HOSE ASSY - 387TC83 04-04JS-04JS-W - (GREASE LINE - LH BULKHEAD TO ROTARY MANIFOLD) | 1 |
| 46 | 55596 - (KIT) | HOSE ASSY - 387TC76 04-04OS-04OS-W - (SHIFT - LH BULKHEAD TEE TO ROTARY MANIFOLD #3) | 1 |
| 47 | 55596 - (KIT) | HOSE ASSY - 387TC51 06-06OS-06OS-W - (BRAKE - RH DRIVE MOTOR TEE TO RH BULKHEAD TEE) | 1 |

# P100-00220 - 10’6” 45L NON-LEVELING CARBODY HYD. FITTINGS - (FUEL HOSES)

**NOTE: HYDRAULIC FITTINGS GET 545 LOCTITE™**

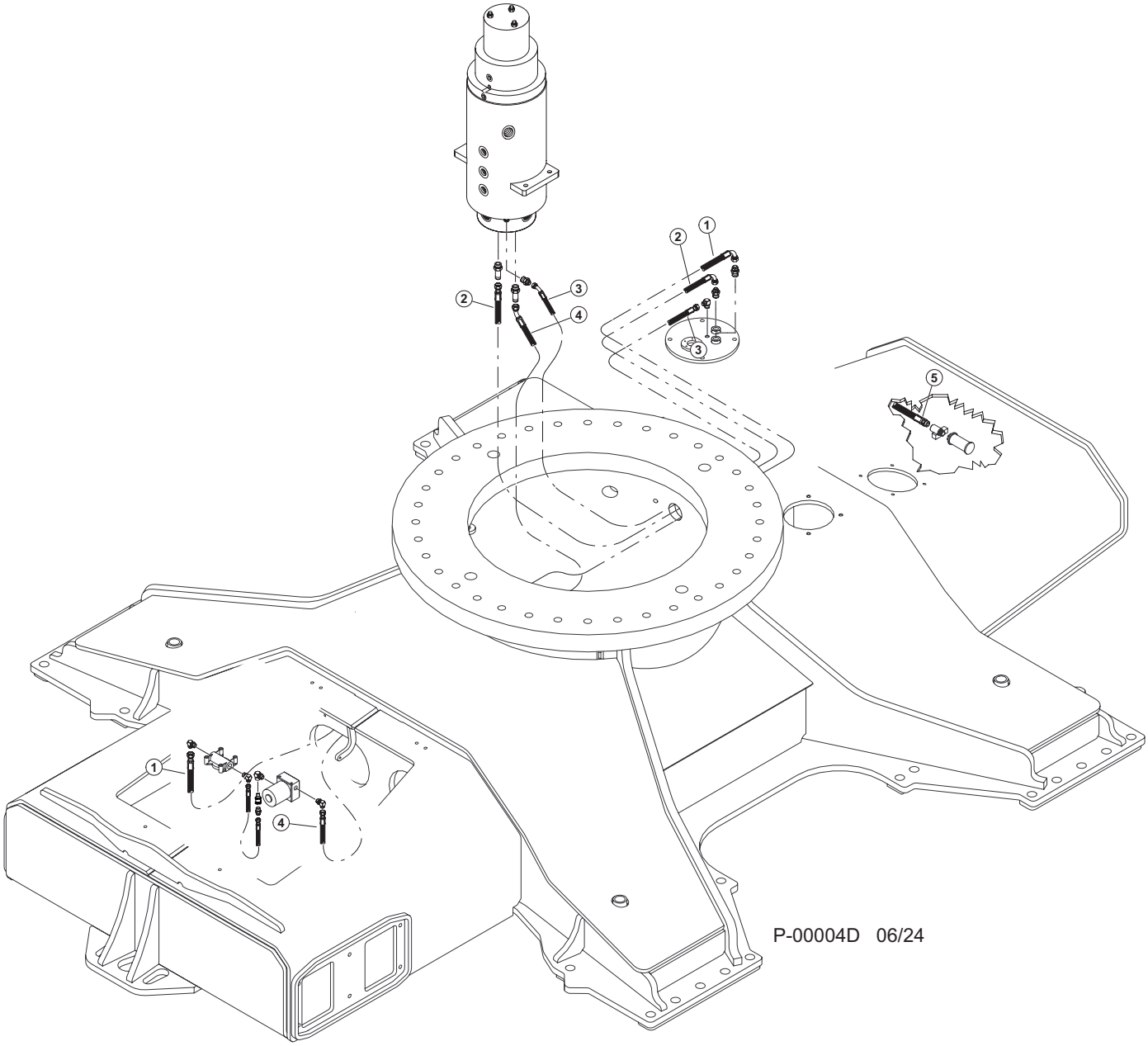

# P100-00220 - 10’6” 45L NON-LEVELING CARBODY HYD. FITTINGS - (FUEL HOSES)

| Item | Part # | Description | Qty. |
|---|---|---|---|
| 1 | 55596 - (KIT) | HOSE ASSY - 221FR77 08-08JS-08J9-W - (FUEL TANKSUPPLY TO FUEL FILTER) | 1 |
| 2 | 55596 - (KIT) | HOSE ASSY - 221FR82 06-06JS-06J9-W - (FUEL RETURN - ROTARY MANIFOLD PORT FR TO FUEL TANK) | 1 |
| 3 | 55596 - (KIT) | HOSE ASSY - 387TC20 04-04OS-04O4-W - (FUEL VENT - FUEL TANK TO ROTARY MANIFOLD PORT FS) | 1 |
| 4 | 55596 - (KIT) | HOSE ASSY - 221FR759 06-06JS-06J4-W - (FUEL PUMP TO ROTARY MANIFOLD) | 1 |
| 5 | 55596 - (KIT) | HOSE ASSY - 1887TC24 08-08MP-0804 - (FUEL SUPPLY IN TANK) | 1 |

# UNDERCARRIAGE - (R)

# R100-00010 - TRACK FRAME 725 STD SLIDER TN/TL725D - 9’8”, 10’4” (L) - 9’6”, 10’4” (NL)

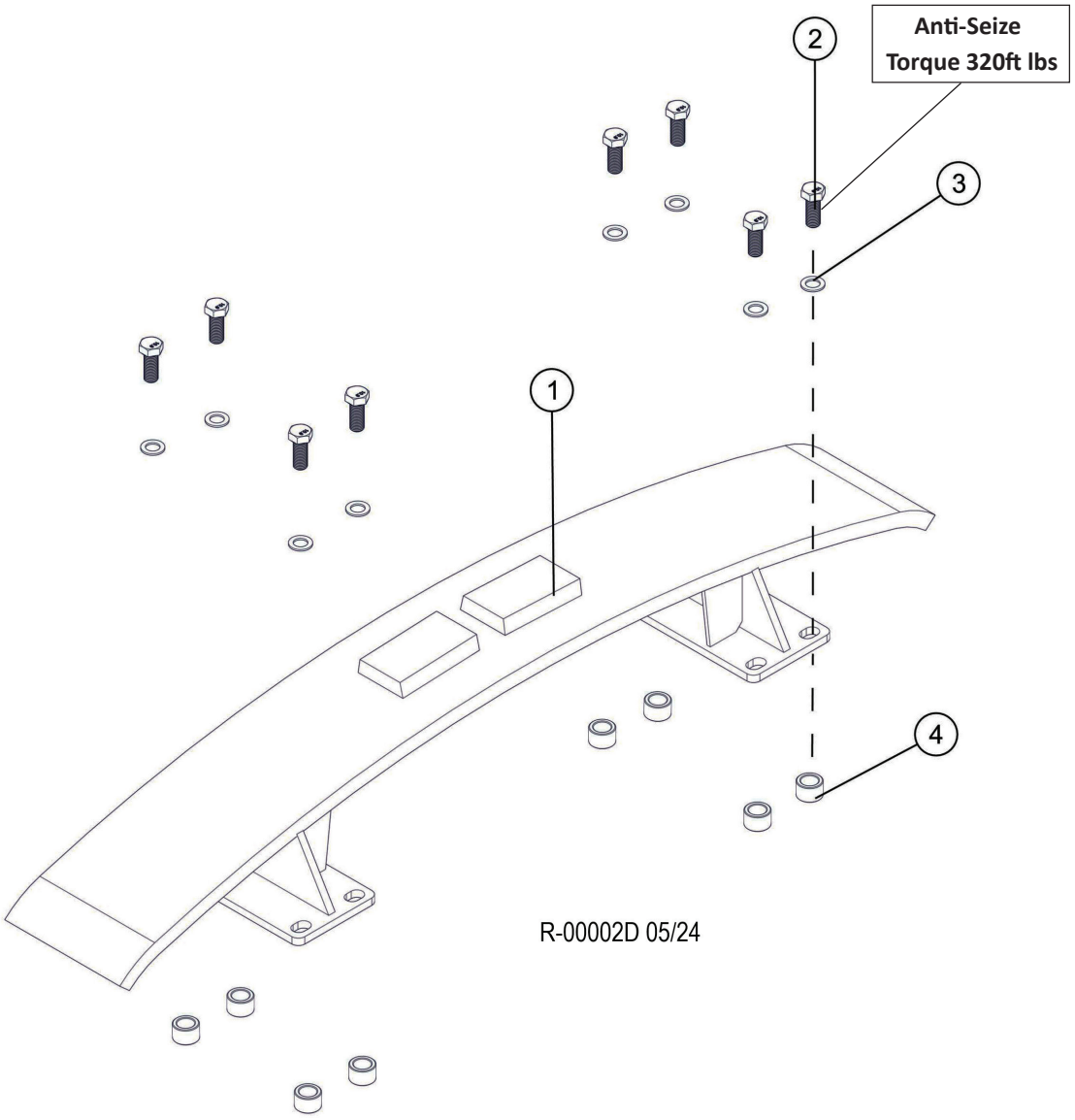


| Item | Part # | Description | Qty. |
|---|---|---|---|
| 1 | 54086 | SLIDER, TRACK - 735 10’4” CARBODY | 2 |
| 2 | 18525 | BOLT - 20MM-2.5P X 50MM **ANTI-SEIZE (TORQUE 320FT LBS)** | 16 |
| 3 | 19926 | WASHER, BOLT - ROLLER | 16 |
| 4 | 53950 | SPACER, TRACK SLIDER - 1.62” X 1” | 16 |

# R100-00020 - TRACK SLIDER - TL725D - 9’8”, 10’4”

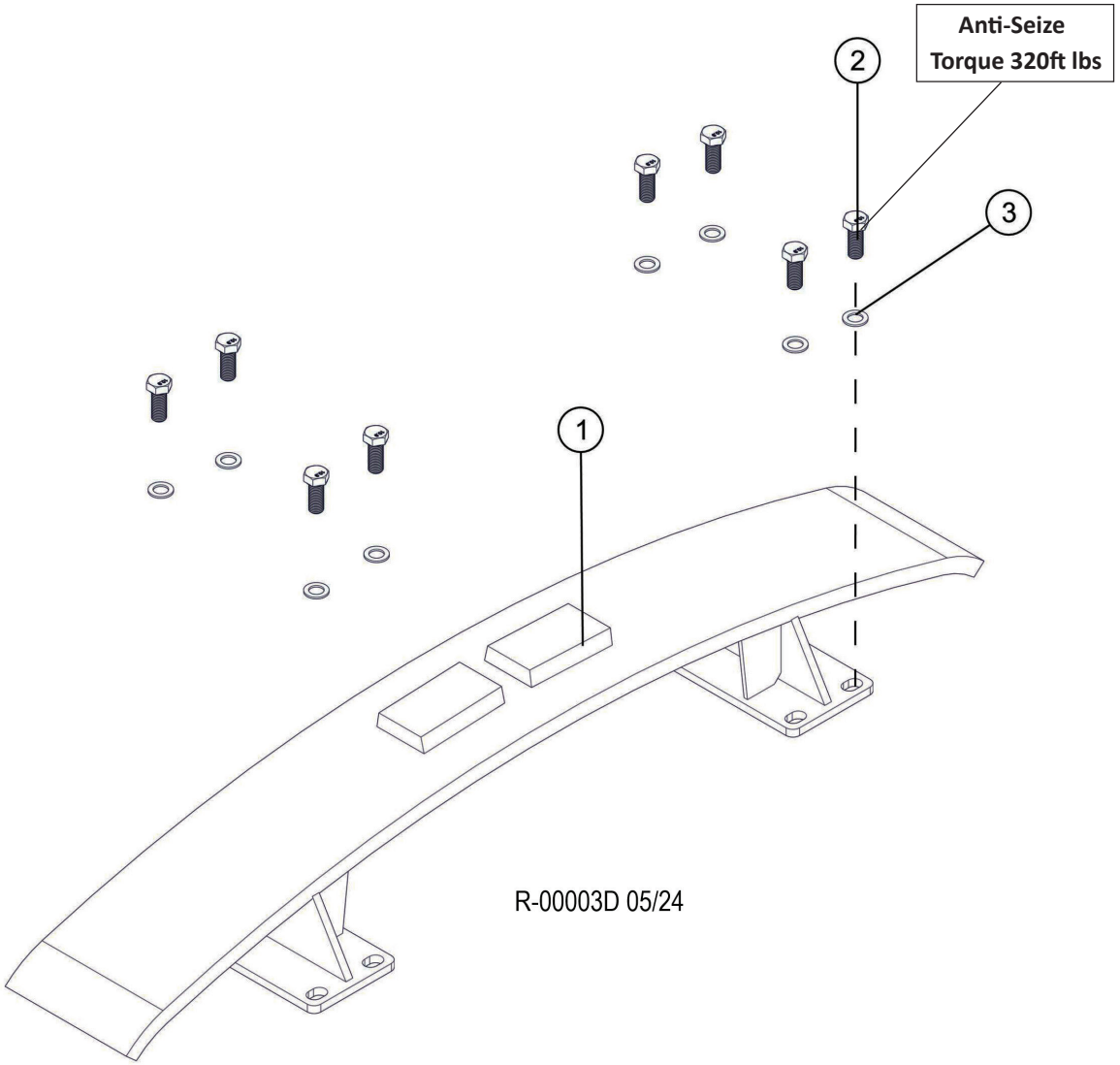


| Item | Part # | Description | Qty. |
|---|---|---|---|
| 1 | 54086 | SLIDER, TRACK - 735 10’4” CARBODY | 2 |
| 2 | 18525 | BOLT - 20MM-2.5P X 50MM **ANTI-SEIZE (TORQUE 320FT LBS)** | 16 |
| 3 | 42110 | WASHER, FLAT - 20MM | 16 |

# R100-00030 - TRACK SLIDER - TN725D - 9’6”, 10’6”

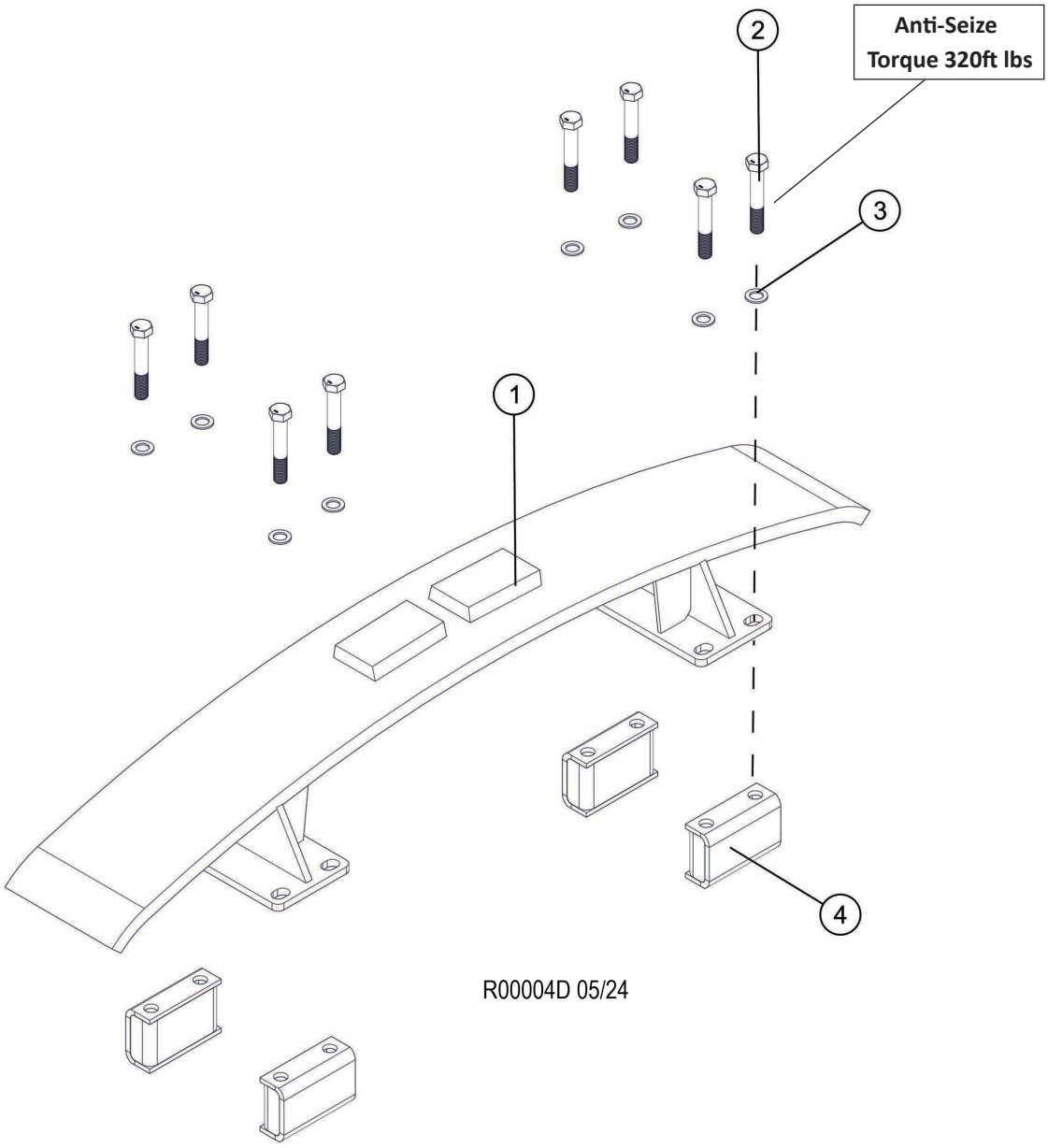


| Item | Part # | Description | Qty. |
|---|---|---|---|
| 1 | 54086 | SLIDER, TRACK - 735 10’4” CARBODY | 2 |
| 2 | 53120 | BOLT - 20MM-2.5 X 140MM **ANTI-SEIZE (TORQUE 320FT LBS)** | 16 |
| 3 | 42110 | WASHER, FLAT - 20MM | 16 |
| 4 | 53626 | RISER, TOP TRACK ROLLER 725 NL 4.0T | 8 |

# R100-00040 - TRACK FRAME 735-745 STD SLIDER - TN/TL735D, TN/TL745D

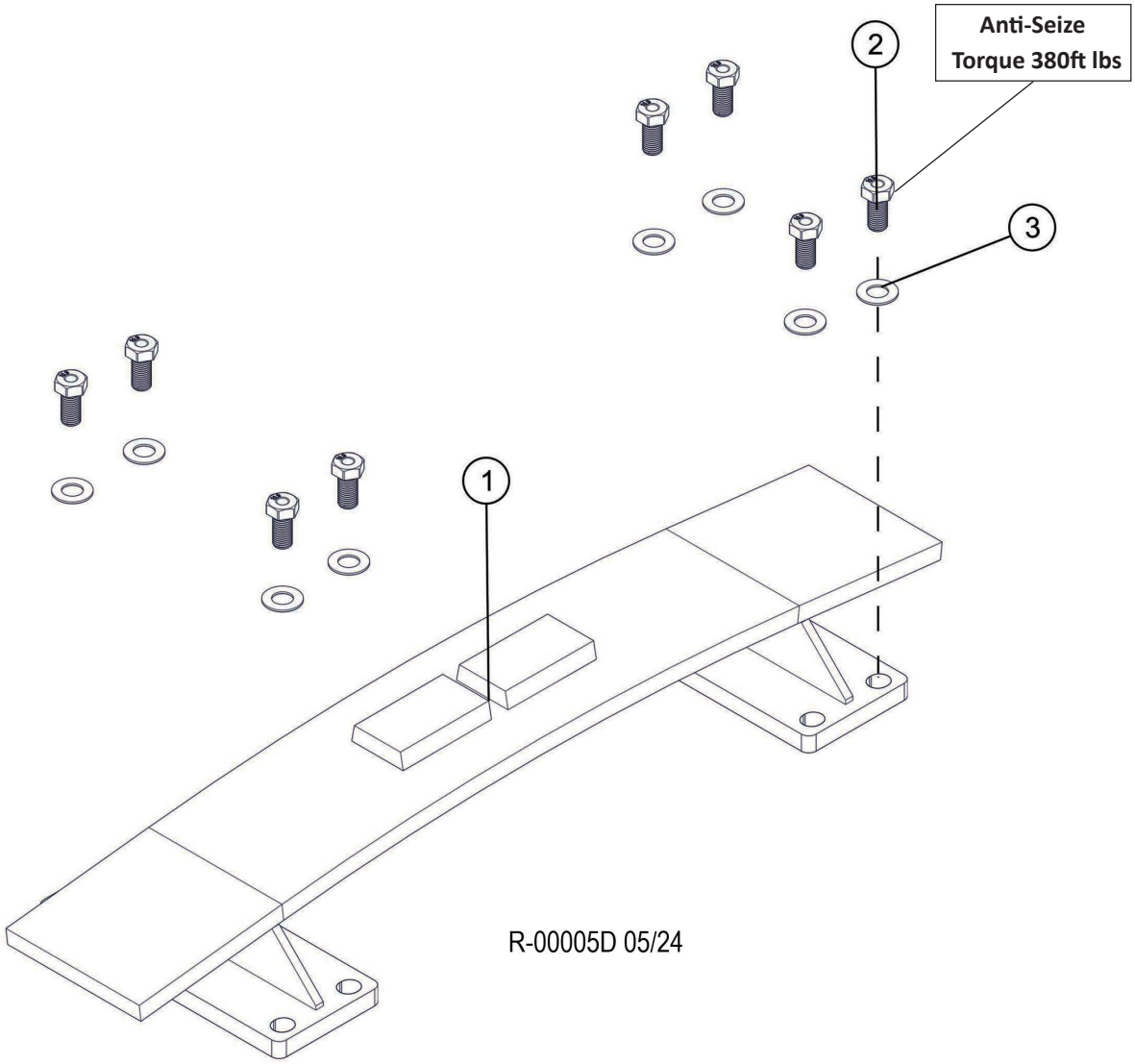


| Item | Part # | Description | Qty. |
|---|---|---|---|
| 1 | 22728 | SLIDER, TRACK - 735 10’4” CARBODY | 1 |
| 2 | 21444 | BOLT - 24MM X 2.0P X 50MM 10.9 **ANTI-SEIZE (TORQUE 380FT LBS)** | 16 |
| 3 | 15579 | WASHER, SAE FLAT - 1” | 16 |

# R100-00050 - TRACK SLIDER - L.P. (11’0” CARBODY) - TL735D, TL-745D

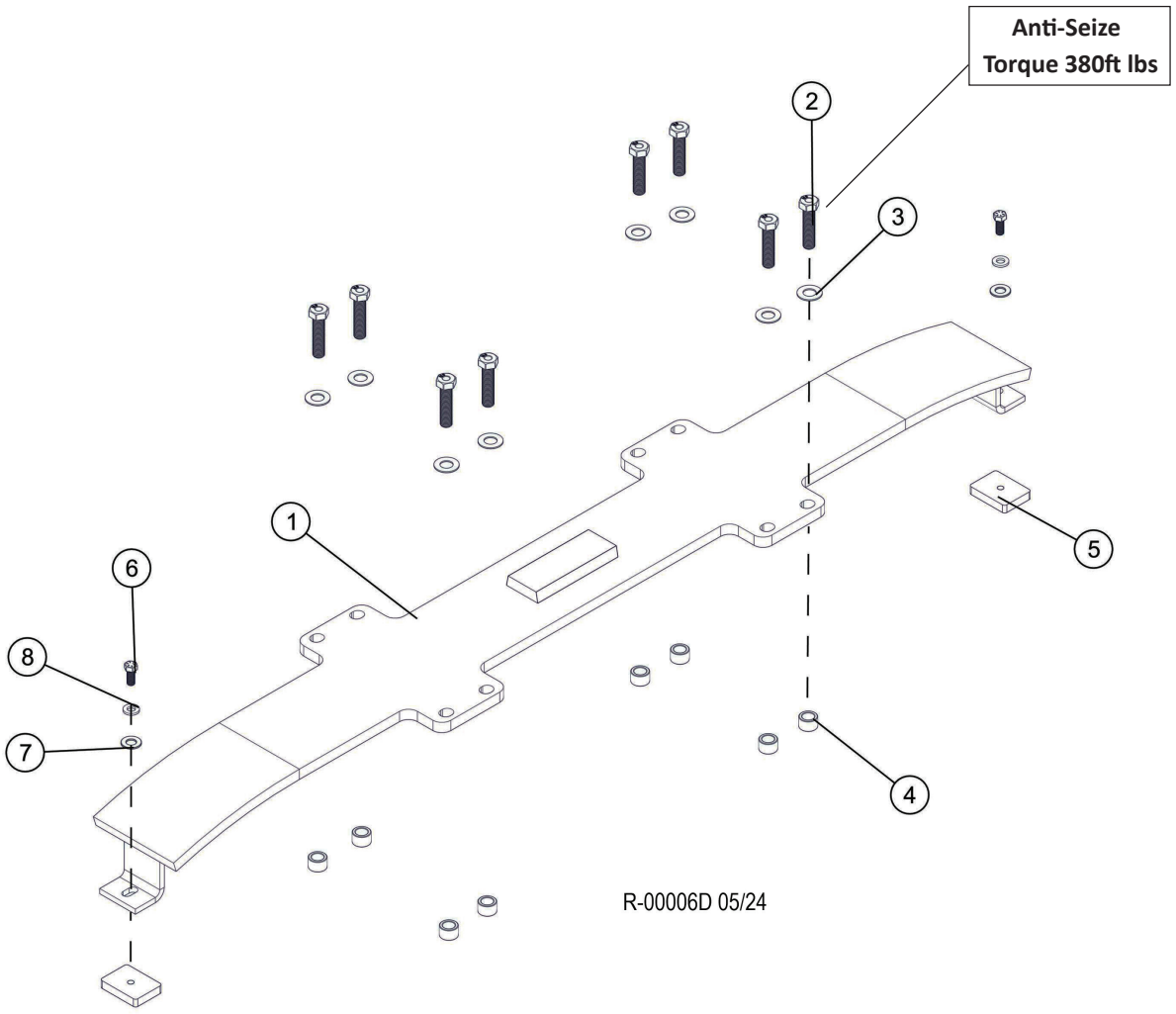


| Item | Part # | Description | Qty. |
|---|---|---|---|
| 1 | 53949 | SLIDER, TRACK - 11’0”,11’-2” CAR BODY TL735/45,TL | 2 |
| 2 | 53946 | BOLT - 24MM-3.0-100MM 10.9 **ANTI-SEIZE (TORQUE 380FT LBS)** | 16 |
| 3 | 15579 | WASHER, SAE FLAT - 1” | 16 |
| 4 | 53950 | SPACER, TRACK SLIDER - 1.62” X 1” | 16 |
| 5 | 47604 | BAR, TAPPED 3’ X 4” X 5/8” | 4 |
| 6 | 15502 | BOLT - .625” X 1.5” | 4 |
| 7 | 10771 | WASHER, SAE FLAT - .625” | 4 |
| 8 | 23210 | WASHER, SAE FLAT - .625” (EXTRA THICK) | 4 |

# R100-00060 - TRACK SLIDER - TN735D, TN745D, TN755D

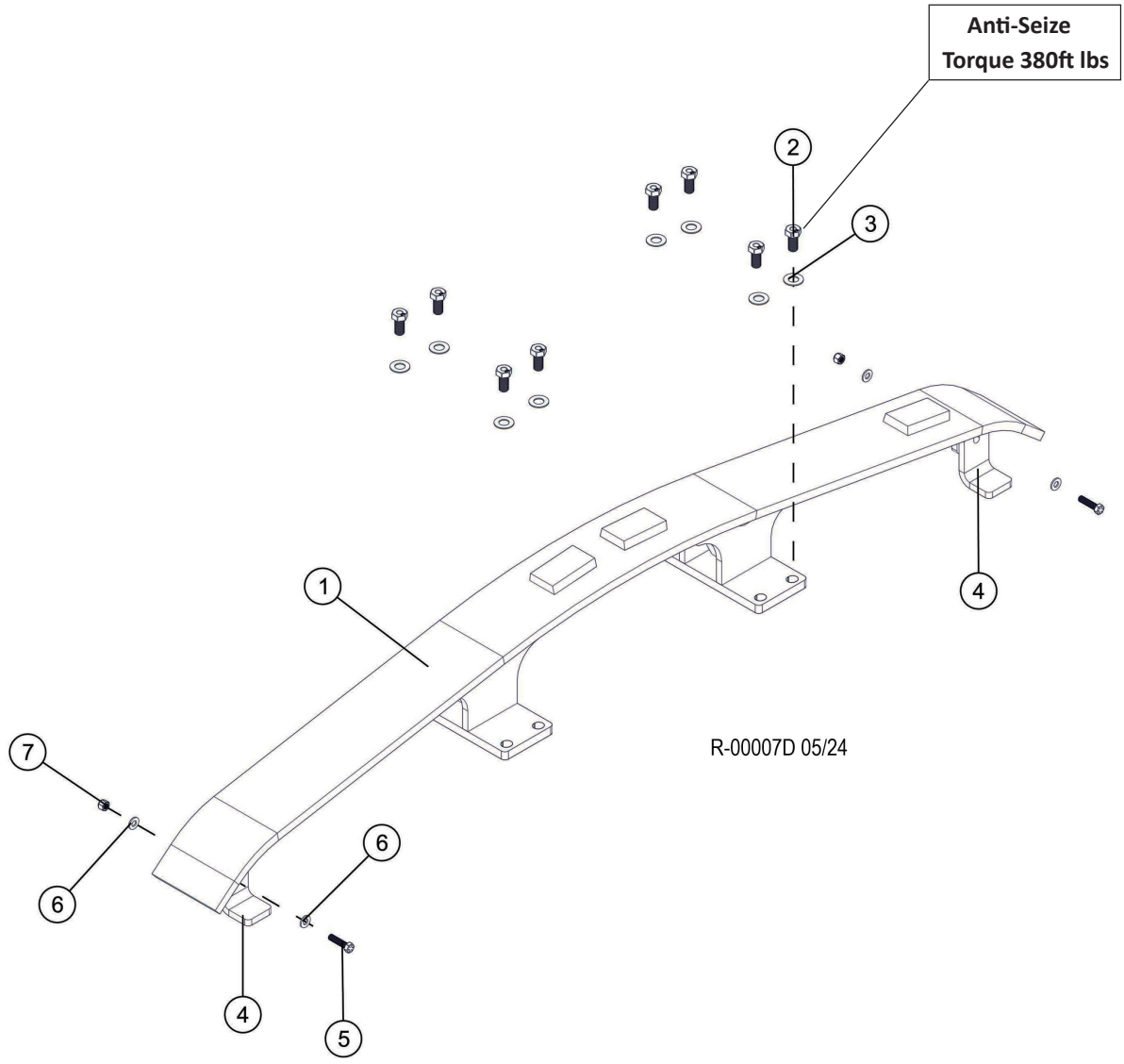


| Item | Part # | Description | Qty. |
|---|---|---|---|
| 1 | 47690 | SLIDER, TRACK - TN745/765 11’-2” | 2 |
| 2 | 21444 | BOLT - 24MM X 2.0P X 50MM 10.9 **ANTI-SEIZE (TORQUE 380FT LBS)** | 16 |
| 3 | 15579 | WASHER, SAE FLAT - 1” | 16 |
| 4 | 47911 | PLATE, TRACK SLIDER SUPPORT 11’-2” NON L | 4 |
| 5 | 15517 | BOLT - .625” X 2.5” | 4 |
| 6 | 10805 | WASHER, FLAT - .625” | 8 |
| 7 | 10816 | NUT, LOCK - .625” | 4 |

# R100-00070 - TRACK FRAME STD SF ROLLER - TL725D

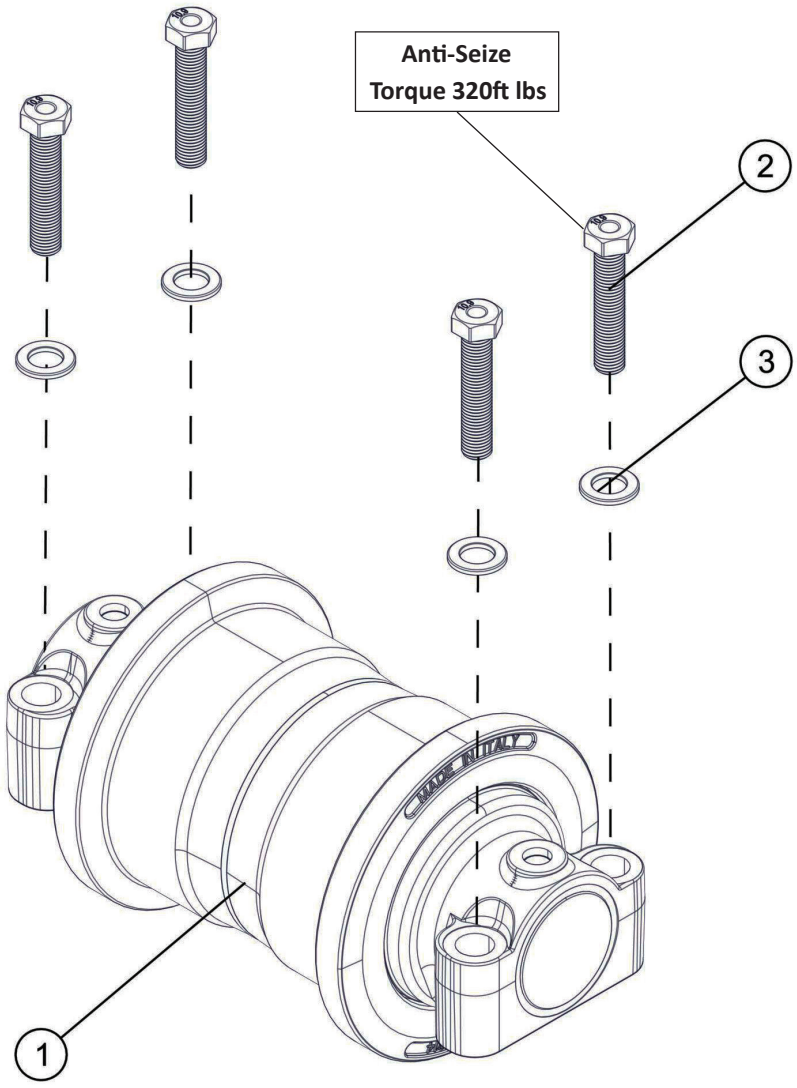


R-00009D 05/24

| Item | Part # | Description | Qty. |
|---|---|---|---|
| 1 | 53220 | ROLLER, BOTTOM SINGLE FLANGE - 330 | 4 |
| 2 | 19923 | BOLT - 20MM - 2.5P X 100MM **ANTI-SEIZE (TORQUE 320FT LBS)** | 16 |
| 3 | 42110 | WASHER, FLAT - 20MM | 16 |

# R100-00080 - TRACK FRAME STD SF ROLLER - TN725D

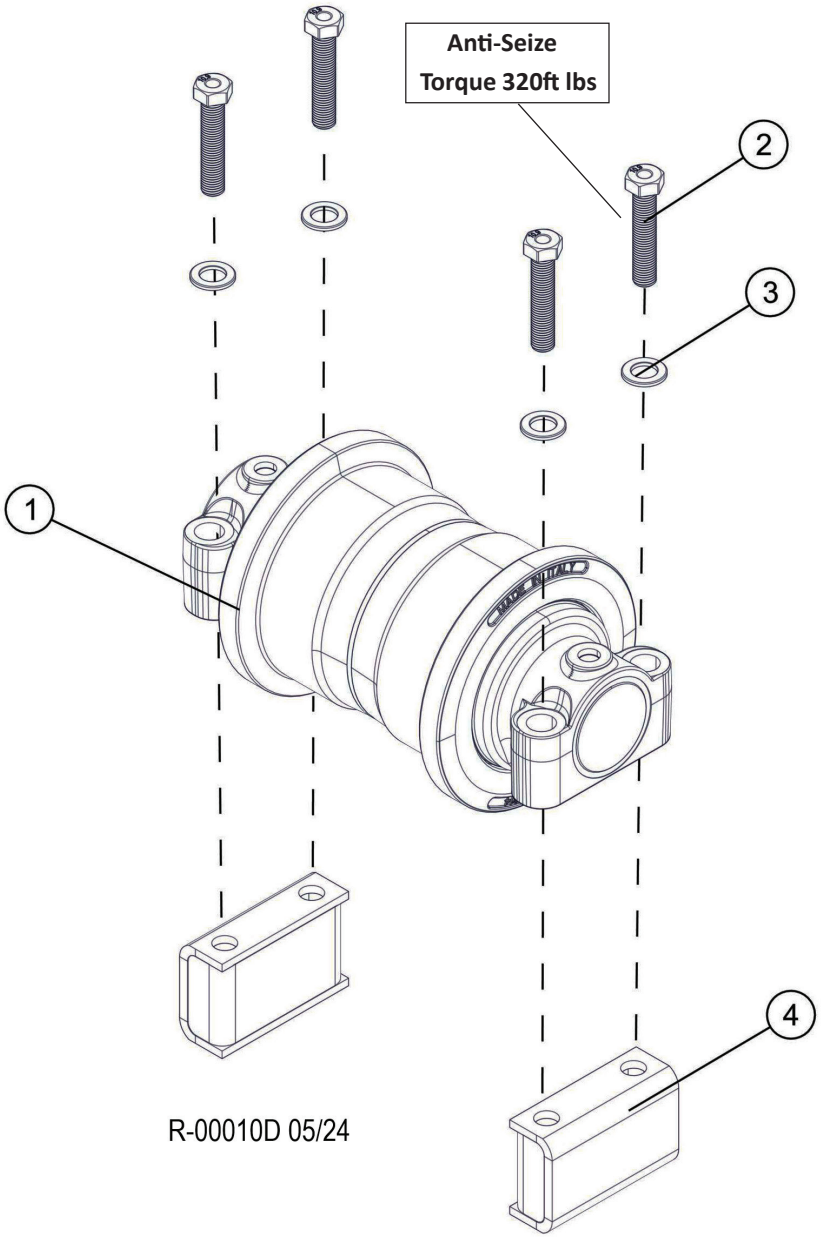


| Item | Part # | Description | Qty. |
|---|---|---|---|
| 1 | 53220 | ROLLER, BOTTOM SINGLE FLANGE - 330 | 4 |
| 2 | 53628 | BOLT - TOP ROLLER SPACER - 20MM X 200MM **ANTI-SEIZE (TORQUE 320FT LBS)** | 16 |
| 3 | 42110 | WASHER, FLAT - 20MM | 16 |
| 4 | 53626 | RISER, TOP TRACK ROLLER 725 NL 4.0T | 8 |

# R100-00090 - TRACK FRAME STD SF ROLLER - TN/TL735D, TN/TL745D

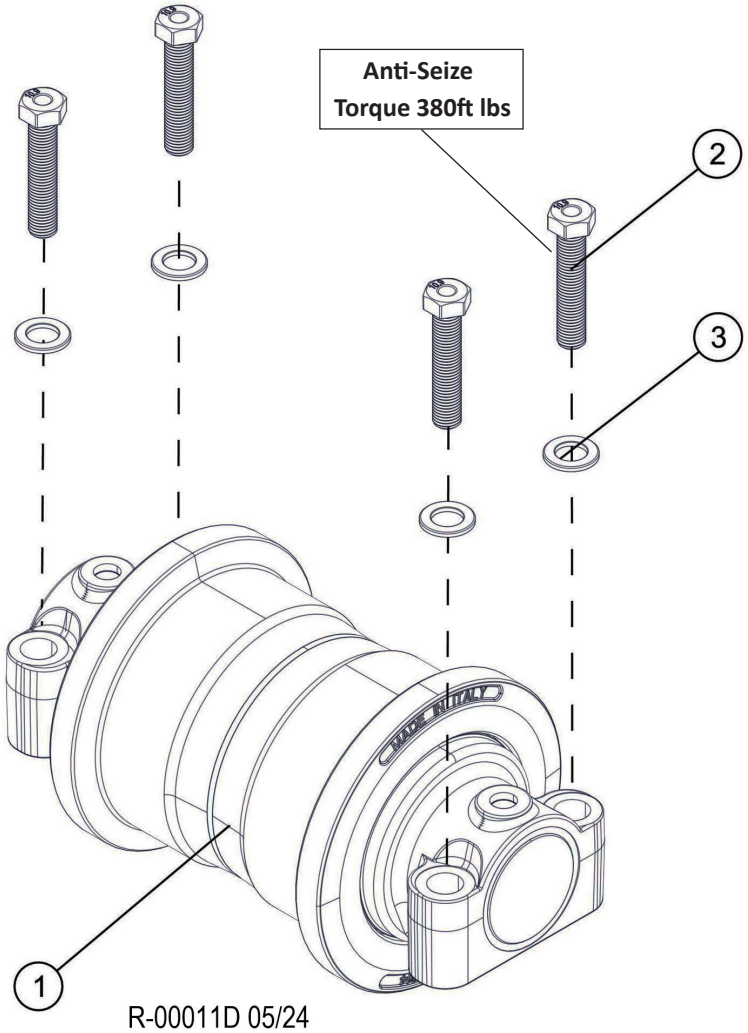


| Item | Part # | Description | Qty. |
|---|---|---|---|
| 1 | 53221 | ROLLER, BOTTOM SINGLE FLANGE - 330 | 4 |
| 2 | 57249 | BOLT - 24MM-3.0 X 120MM **ANTI-SEIZE (TORQUE 380FT LBS)** | 16 |
| 3 | 15579 | WASHER, SAE FLAT - 1” | 16 |

# R100-00100 - TRACK FRAME STAR ROLLER - TL725D

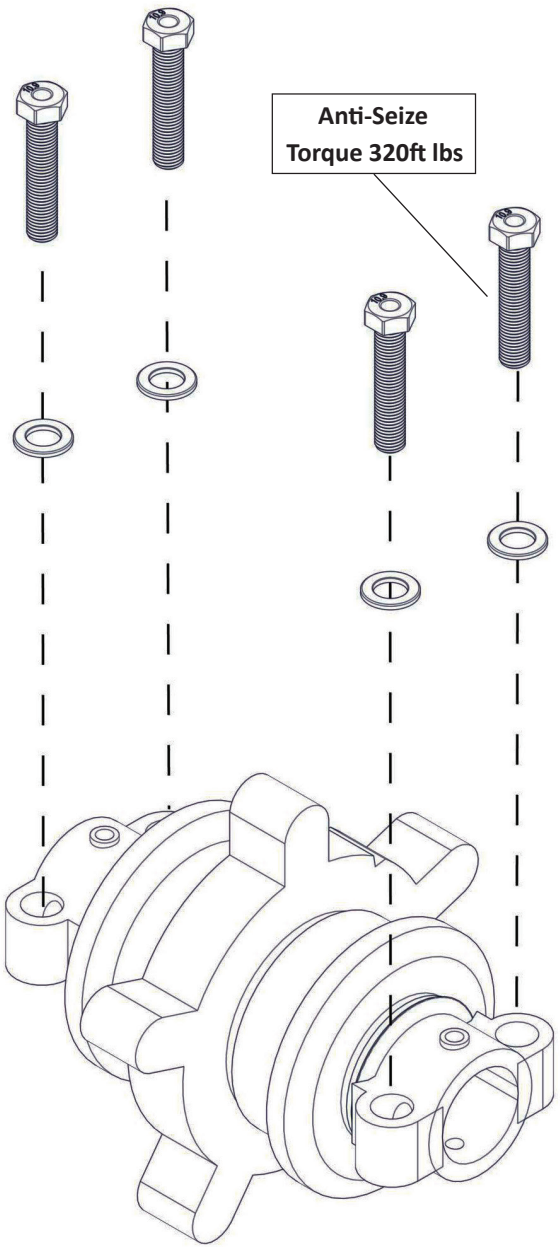


R-00012D 05/24

| Item | Part # | Description | Qty. |
|---|---|---|---|
| 1 | 53865 | ROLLER, BOTTOM STAR - 725 | 4 |
| 2 | 19923 | BOLT - 20MM-2.5P X 100MM **ANTI-SEIZE (TORQUE 320FT LBS)** | 16 |
| 3 | 42110 | WASHER, FLAT - 20MM | 16 |

# R100-00110 - TRACK FRAME STAR ROLLER - TN725D

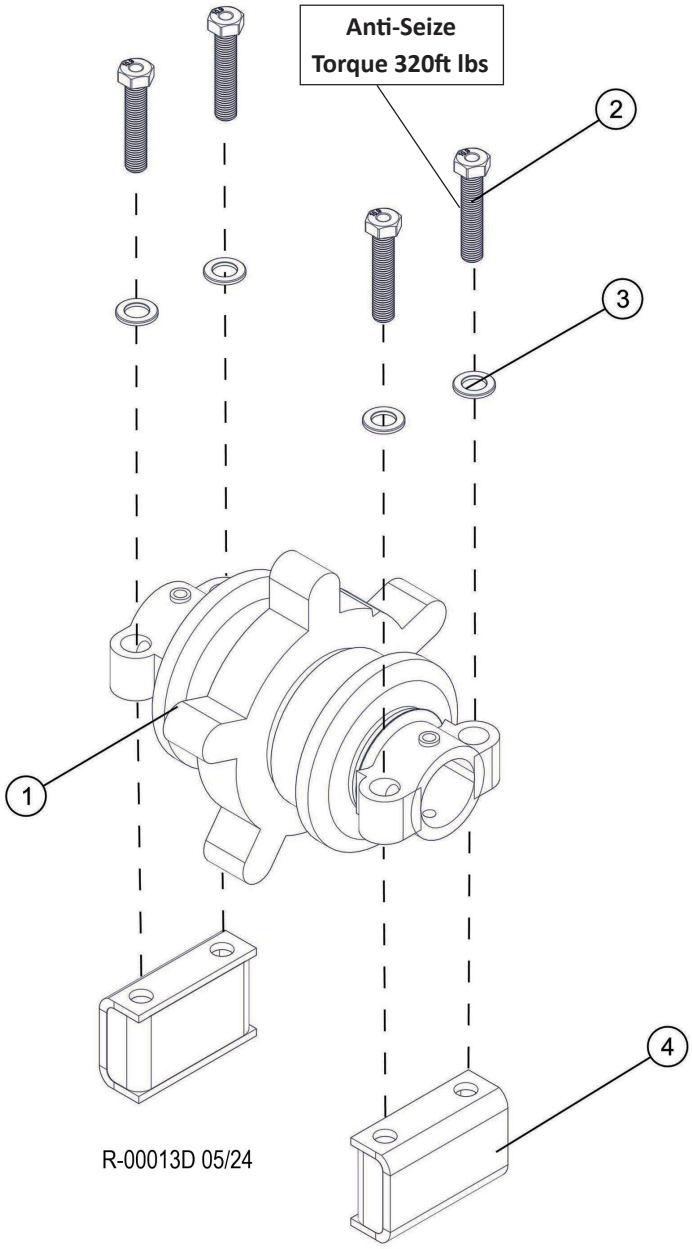


| Item | Part # | Description | Qty. |
|---|---|---|---|
| 1 | 53865 | ROLLER, BOTTOM STAR - 725 | 4 |
| 2 | 53628 | BOLT - TOP ROLLER SPACER - 20MM X 200MM **ANTI-SEIZE (TORQUE 320FT LBS)** | 16 |
| 3 | 42110 | WASHER, FLAT - 20MM | 16 |
| 4 | 53626 | RISER, TOP TRACK ROLLER 725 NL 4.0T | 8 |

# R100-00120 - TRACK FRAME STAR ROLLER - TN/TL735D, TN/TL745D

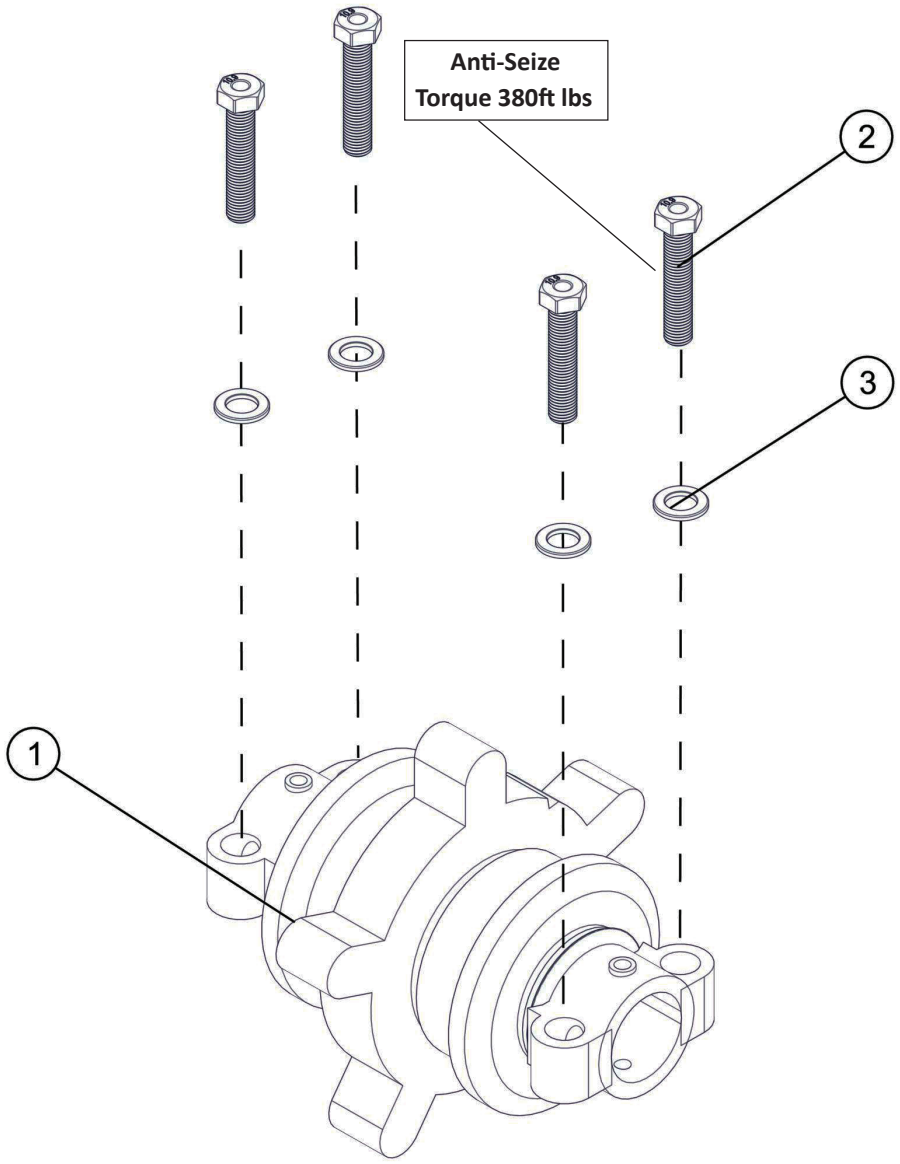


R-00014D 05/24

| Item | Part # | Description | Qty. |
|---|---|---|---|
| 1 | 53759 | ROLLER, BOTTOM STAR - 735 | 4 |
| 2 | 57249 | BOLT - 24MM-3.0 X 120MM **ANTI-SEIZE (TORQUE 380FT LBS)** | 16 |
| 3 | 15579 | WASHER, SAE FLAT - 1” | 16 |

# R100-00130 - TRACK ROLLER ASSEMBLY INSTALLATION (725)

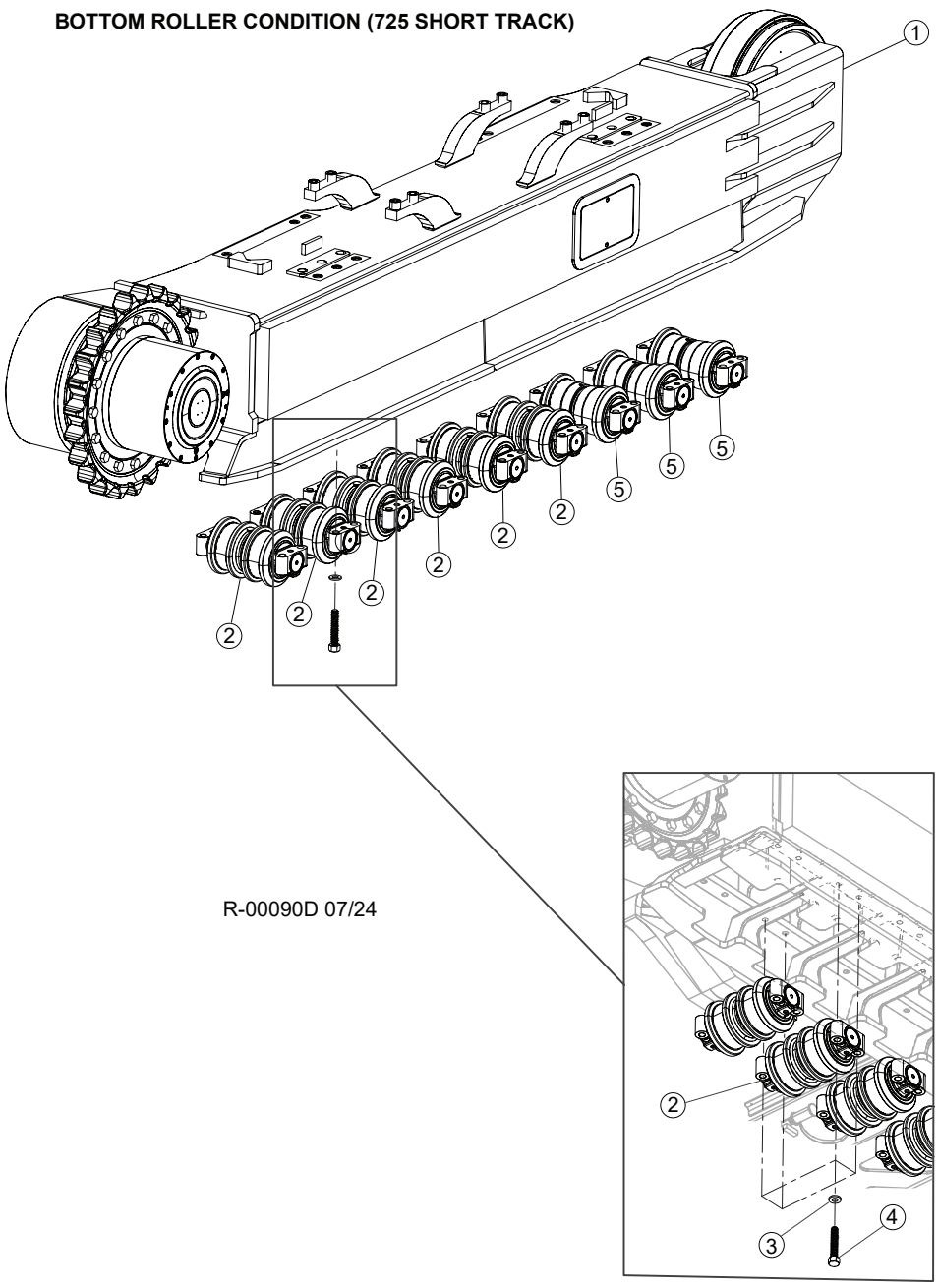


| Item | Part # | Description | Qty. |
|---|---|---|---|
| 1 | 53096 | 725D TRACK FRAME SET - CAT 325 LONG (LEFT AND RIGHT) | 1 |
| - | 699240 | FRAME, RIGHT SIDE | 1 |
| - | 699250 | FRAME, LEFT SIDE | 1 |
| 2 | 53678 | ROLLER, BOTTOM DOUBLE FLANGE - 325 | 6 |
| 3 | 42110 | WASHER, FLAT - 20MM | 32 |
| 4 | 19923 | BOLT - 20MM-2.5P X 100MM | 32 |
| 5 | 53220 | ROLLER, BOTTOM SINGLE FLANGE - 325 | 3 |

# R100-00130 - TRACK ROLLER ASSEMBLY INSTALLATION (735 AND 745)

**BOTTOM ROLLER CONDITION (735 AND 745 LONG TRACK)**

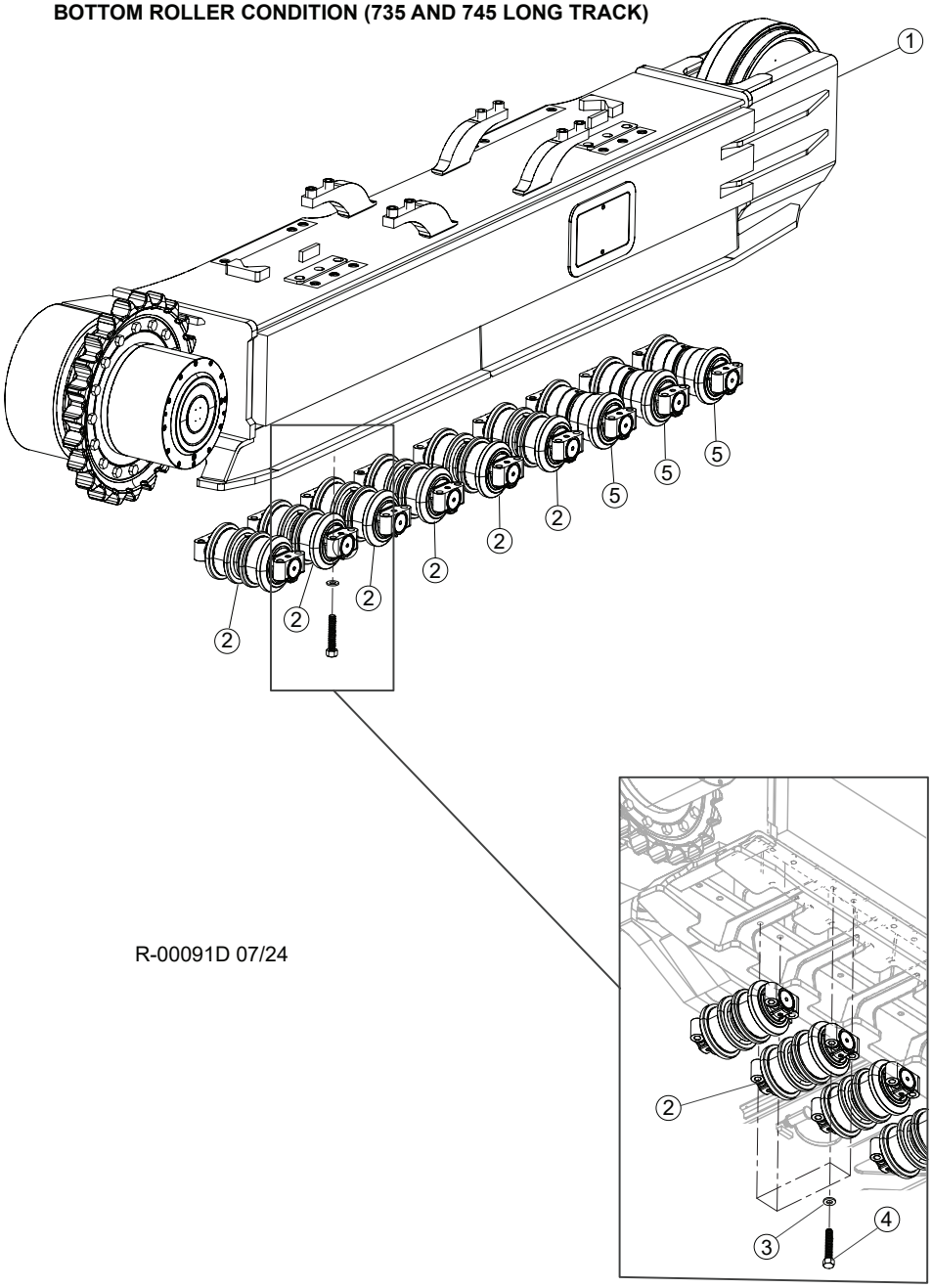





R-00091D 07/24

| Item | Part # | Description | Qty. |
|---|---|---|---|
| 1 | 53066 | 735D TRACK FRAME SET - CAT 330 (LEFT AND RIGHT (STANDARD) | 1 |
| - | 55155 | 745D TRACK FRAME SET - CAT 330 LONG (LEFT AND RIGHT) | 1 |
| - | 699240 | FRAME, RIGHT SIDE | 1 |
| - | 699250 | FRAME, LLEFT SIDE | 1 |
| 2 | 53689 | ROLLER, BOTTOM DOUBLE FLANGE - 330 | 6 |
| 3 | 42110 | WASHER, FLAT - 20MM | 32 |
| 4 | 19923 | BOLT - 20MM-2.5P X 100MM | 32 |
| 5 | 53221 | ROLLER, BOTTOM SINGAL FLANGE - 330 | 3 |

# R100-00130 - TRACK SHOE U. 8P, 48L S600 BERCO - 725D

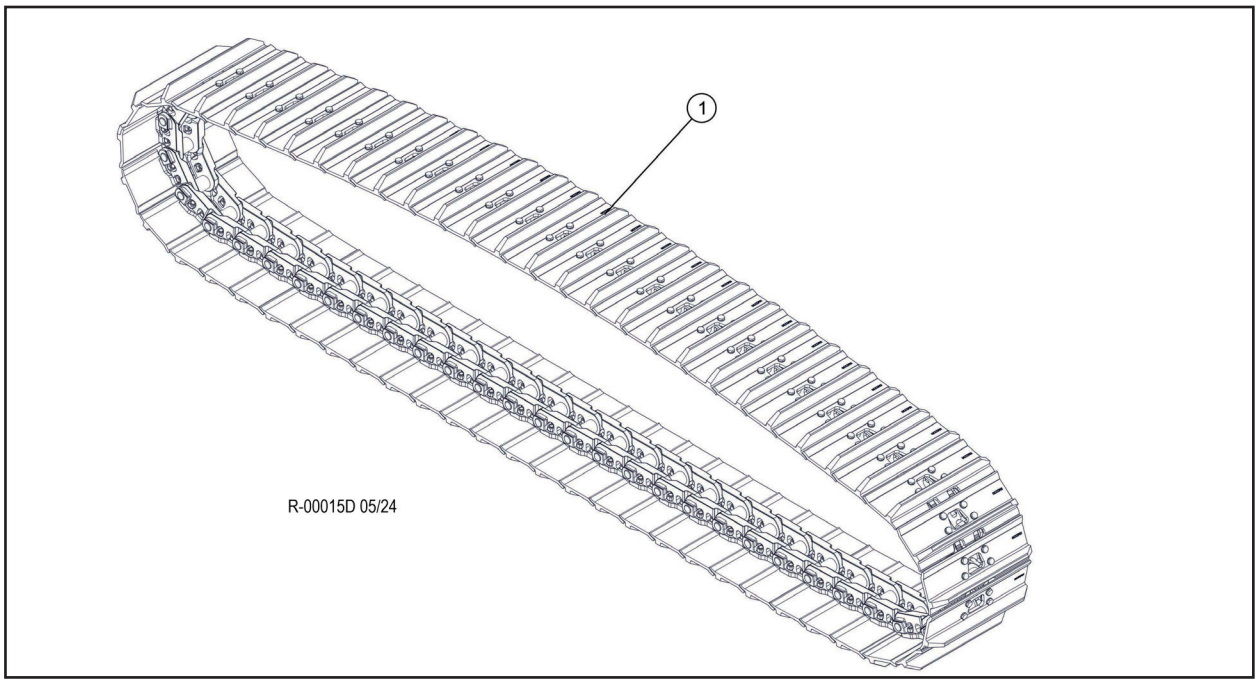


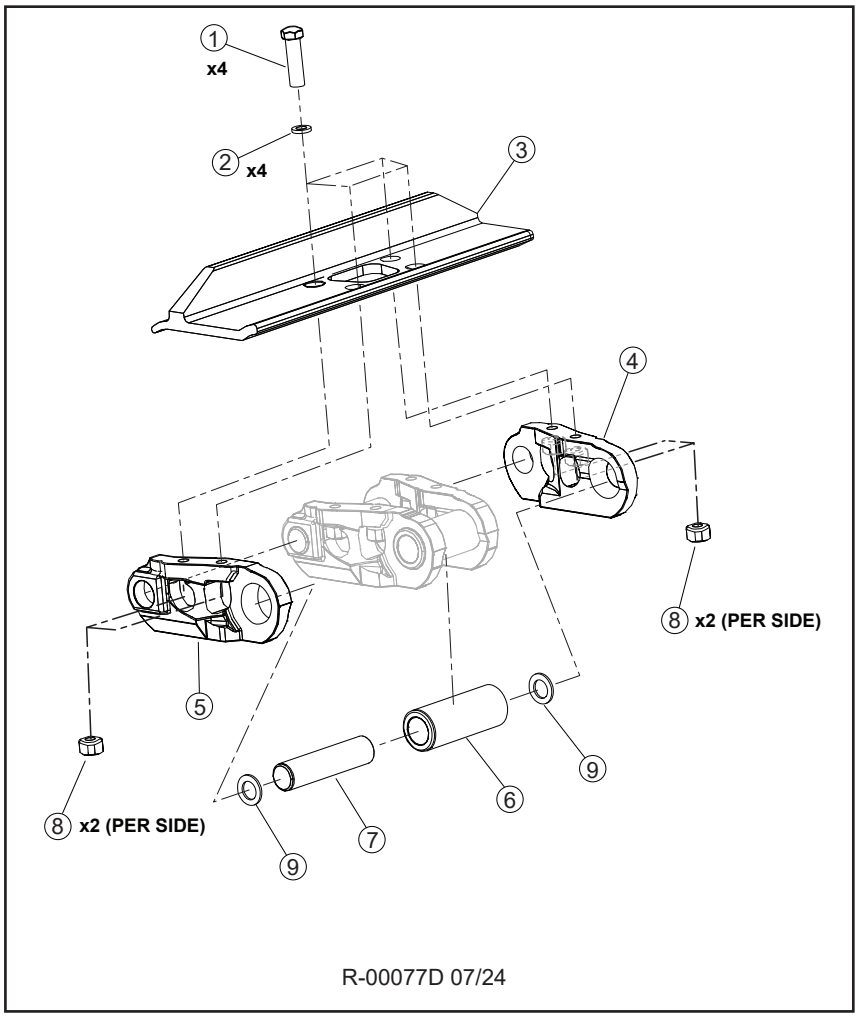

# R100-00130 - TRACK SHOE U. 8P, 48L S600 BERCO - 725D

| Item | Part # | Description | Qty. |
|---|---|---|---|
| 1 | 53100 | TRACK, RAIL W/600 SINGLE (48 LINK) D-6 | 1 |

| Item | Part # | Description | Qty. |
|---|---|---|---|
| 1 | 17185 | BOLT, TRACK SHOE | 180 |
| 2 | N/A | WASHER | 180 |
| 3 | 17183 | SHOE - 600 SINGLE | 45 |
| 4 | 698460 | LINK (RIGHT) | 45 |
| 5 | 698470 | LINK (LEFT) | 45 |
| 6 | 698420 | BUSHING | 44 |
| - | 698430 | BUSHING, MASTER LINK | 1 |
| 7 | 698450 | PIN | 44 |
| - | 21401 | PIN, MASTER LINK | 1 |
| 8 | 17186 | NUT, TRACK SHOE | 180 |
| 9 | 698390 | SEAL, LINK | 88 |
| - | 698410 | SEAL, MASTER LINK | 2 |

**OPTIONAL LONG TRACK**

| | | | |
|---|---|---|---|
| 1 | 17185 | BOLT, TRACK SHOE | 192 |
| 2 | N/A | WASHER | 192 |
| 3 | 17183 | SHOE, 600 SINGLE | 48 |
| 4 | 698460 | LINK (RIGHT) | 48 |
| 5 | 698470 | LINK (LEFT) | 48 |
| 6 | 698420 | BUSHING | 47 |
| - | 698430 | BUSHING, MASTER LINK | 1 |
| 7 | 698450 | PIN | 47 |
| - | 21401 | PIN, MASTER LINK | 1 |
| 8 | 17186 | NUT, TRACK SHOE | 192 |
| 9 | 698390 | SEAL, LINK | 94 |
| - | 698410 | SEAL, MASTER LINK | 2 |

# R100-00140 - TRACK SHOE U. 8P, 48L D600 BERCO - 725D

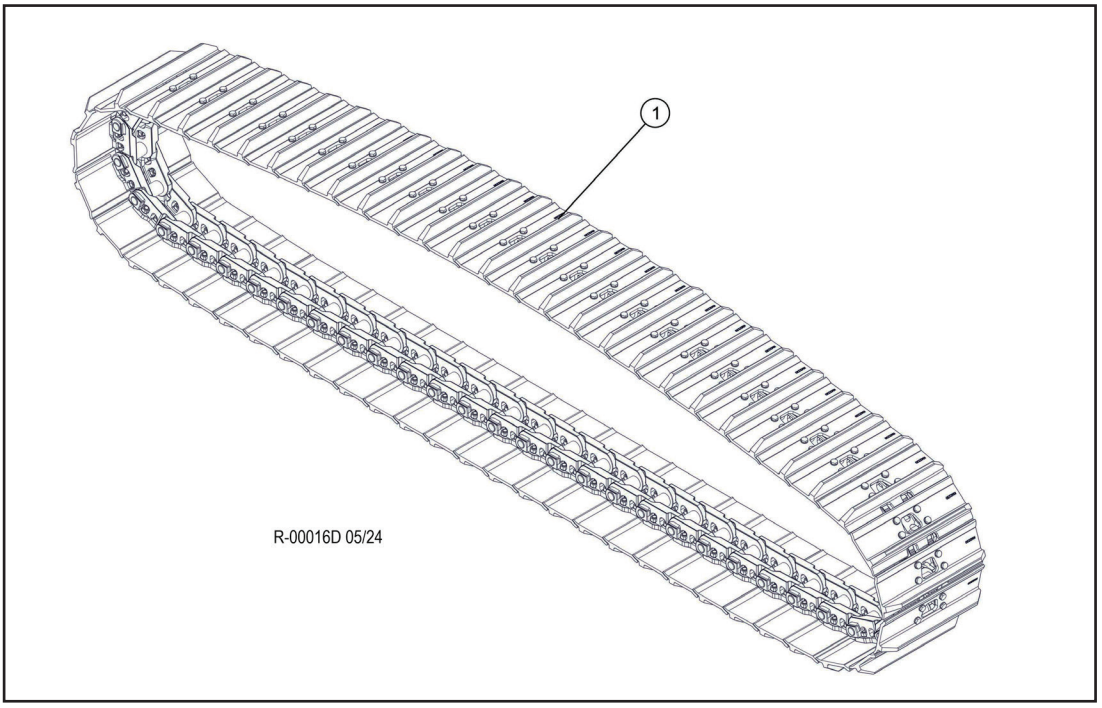


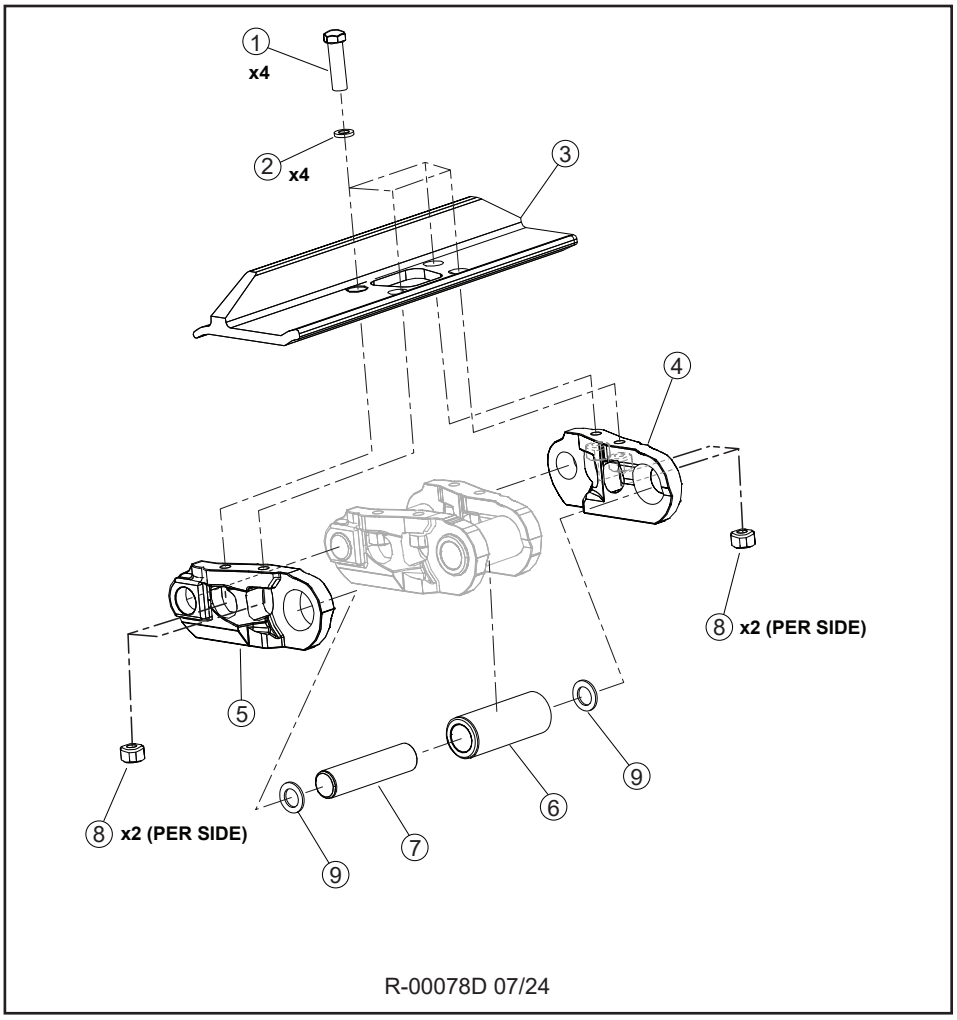

# R100-00140 - TRACK SHOE U. 8P, 48L D600 BERCO - 725D

| Item | Part # | Description | Qty. |
|---|---|---|---|
| 1 | 54025 | TRACK, RAIL W/600 DG-48 LINK D6 BERCO | 1 |

| Item | Part # | Description | Qty. |
|---|---|---|---|
| 1 | SI 878 | BOLT, TRACK SHOE | 216 |
| 2 | N/A | WASHER | 216 |
| 3 | KM2447 700 | SHOE - 600 SINGLE | 54 |
| 4 | SI 649A | LINK (RIGHT) | 54 |
| 5 | SI 650A | LINK (LEFT) | 54 |
| 6 | SI 877 | BUSHING | 53 |
| - | SI 607 | BUSHING, MASTER LINK | 1 |
| 7 | SI 604 | PIN | 53 |
| - | SI 876 | PIN, MASTER LINK | 1 |
| 8 | SI 652 | NUT, TRACK SHOE | 216 |
| 9 | 698390 | SEAL, LINK | 106 |

# R100-00150 - TRACK SHOE U. 8P, 48L S700 BERCO - 725D

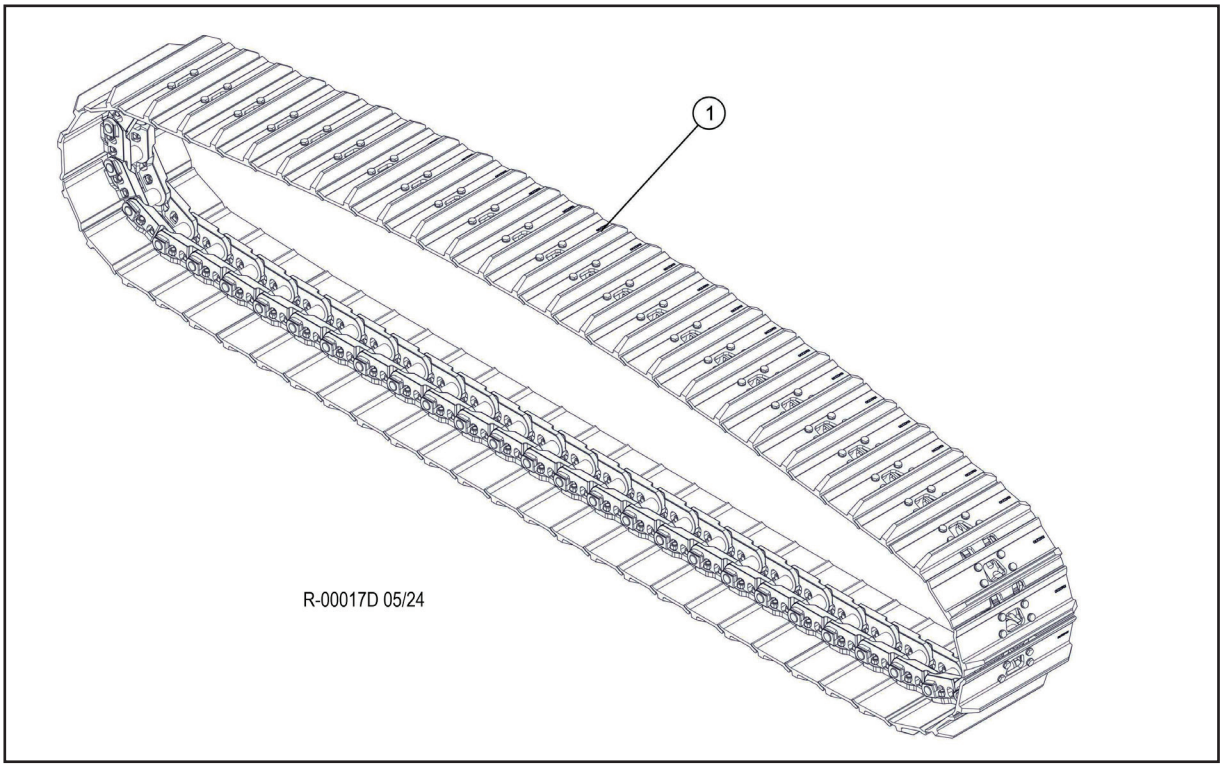


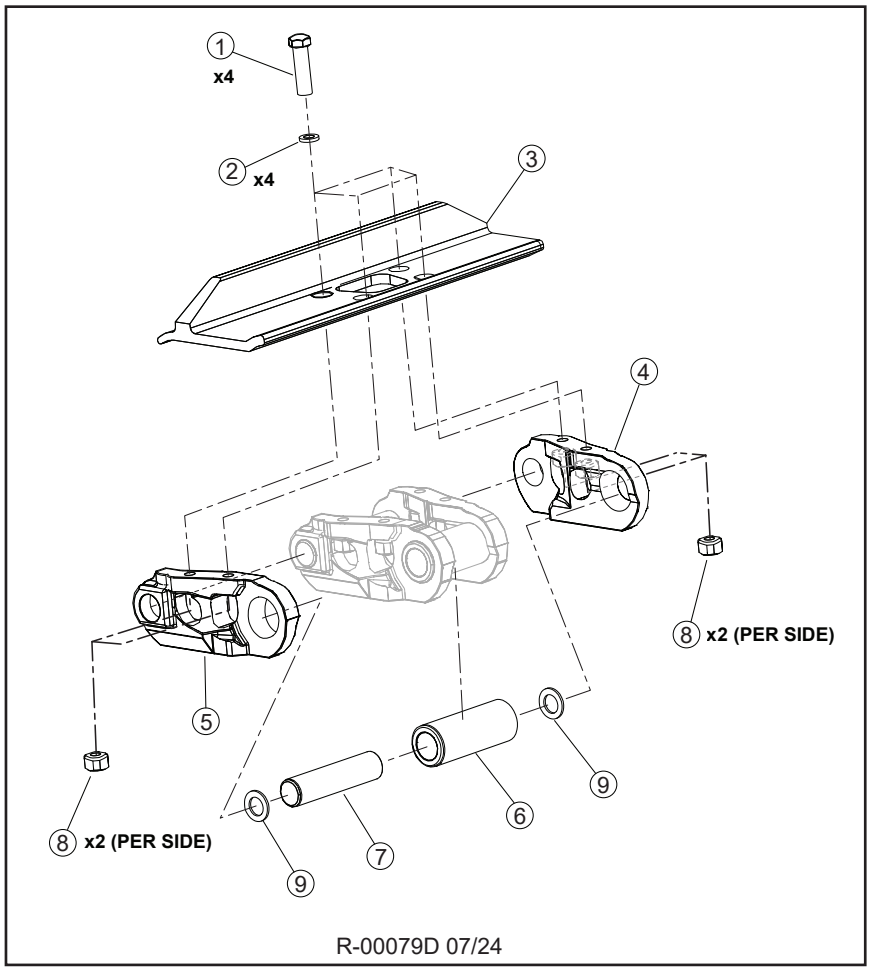

# R100-00150 - TRACK SHOE U. 8P, 48L S700 BERCO - 725D

| Item | Part # | Description | Qty. |
|---|---|---|---|
| 1 | 52647 | TRACK, RAIL W/700 SINGLE (48) - D6 | 1 |

| Item | Part # | Description | Qty. |
|---|---|---|---|
| 1 | 17185 | BOLT, TRACK SHOE | 180 |
| 2 | N/A | WASHER | 180 |
| 3 | 21054 | SHOE - 700 SINGLE | 45 |
| 4 | 698460 | LINK (RIGHT) | 45 |
| 5 | 698470 | LINK (LEFT) | 45 |
| 6 | 698420 | BUSHING | 44 |
| - | 698430 | BUSHING, MASTER LINK | 1 |
| 7 | 698450 | PIN | 44 |
| - | 21401 | PIN, MASTER LINK | 1 |
| 8 | 17186 | NUT, TRACK SHOE | 180 |
| 9 | 698390 | SEAL, LINK | 88 |
| - | 698410 | SEAL, MASTER LINK | 2 |

**OPTIONAL LONG TRACK**

| | | | |
|---|---|---|---|
| 1 | 17185 | BOLT, TRACK SHOE | 192 |
| 2 | N/A | WASHER | 192 |
| 3 | 21054 | SHOE - 700 SINGLE | 48 |
| 4 | 698460 | LINK (RIGHT) | 48 |
| 5 | 698470 | LINK (LEFT) | 48 |
| 6 | 698420 | BUSHING | 47 |
| - | 698430 | BUSHING, MASTER LINK | 1 |
| 7 | 698450 | PIN | 47 |
| - | 21401 | PIN, MASTER LINK | 1 |
| 8 | 17186 | NUT, TRACK SHOE | 192 |
| 9 | 698390 | SEAL, LINK | 94 |
| - | 698410 | SEAL, MASTER LINK | 2 |

# R100-00160 - TRACK SHOE U. 8P, 48L D700 BERCO - 725D

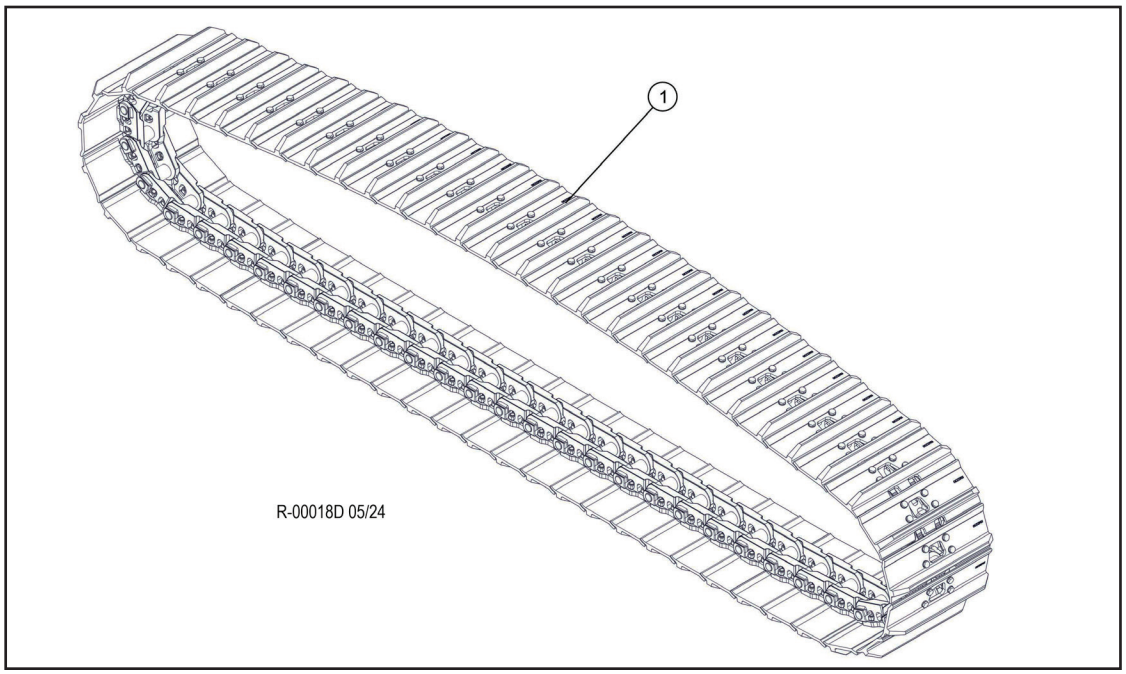


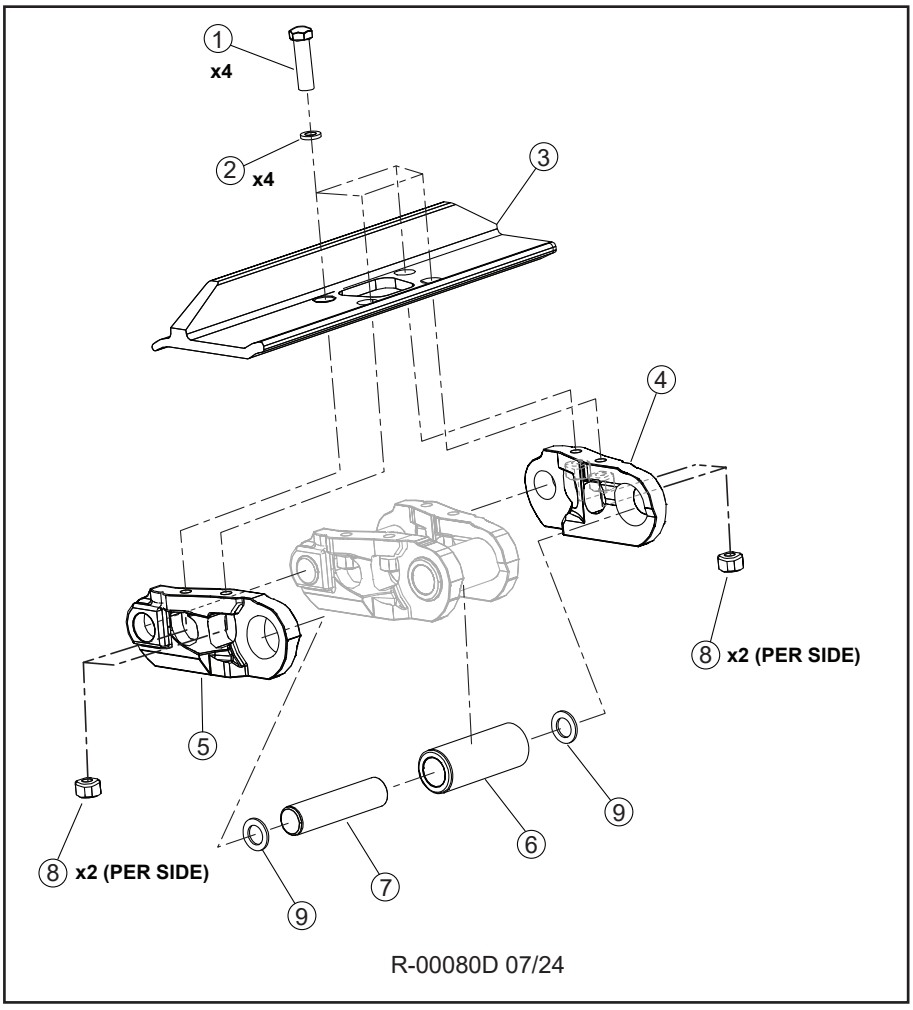

# R100-00160 - TRACK SHOE U. 8P, 48L D700 BERCO - 725D

| Item | Part # | Description | Qty. |
|---|---|---|---|
| 1 | 53630 | TRACK, RAIL W/700 DG (48 LINK) D-6 BERCO | 1 |

| Item | Part # | Description | Qty. |
|---|---|---|---|
| 1 | 17185 | BOLT, TRACK SHOE | 180 |
| 2 | N/A | WASHER | 180 |
| 3 | 19480 | SHOE - 700 DOUBLE | 45 |
| 4 | 698460 | LINK (RIGHT) | 45 |
| 5 | 698470 | LINK (LEFT) | 45 |
| 6 | 698420 | BUSHING | 44 |
| - | 698430 | BUSHING, MASTER LINK | 1 |
| 7 | 698450 | PIN | 44 |
| - | 21401 | PIN, MASTER LINK | 1 |
| 8 | 17186 | NUT, TRACK SHOE | 180 |
| 9 | 698390 | SEAL, LINK | 88 |
| - | 698410 | SEAL, MASTER LINK | 2 |

**OPTIONAL LONG TRACK**

| | | | |
|---|---|---|---|
| 1 | 17185 | BOLT, TRACK SHOE | 192 |
| 2 | N/A | WASHER | 192 |
| 3 | 19480 | SHOE, 600 SINGLE | 48 |
| 4 | 698460 | LINK (RIGHT) | 48 |
| 5 | 698470 | LINK (LEFT) | 48 |
| 6 | 698420 | BUSHING | 47 |
| - | 698430 | BUSHING, MASTER LINK | 1 |
| 7 | 698450 | PIN | 47 |
| - | 21401 | PIN, MASTER LINK | 1 |
| 8 | 17186 | NUT, TRACK SHOE | 192 |
| 9 | 698390 | SEAL, LINK | 94 |
| - | 698410 | SEAL, MASTER LINK | 2 |

# R100-00170 - TRACK SHOE U. 8P, 48L T850 BERCO - 725D

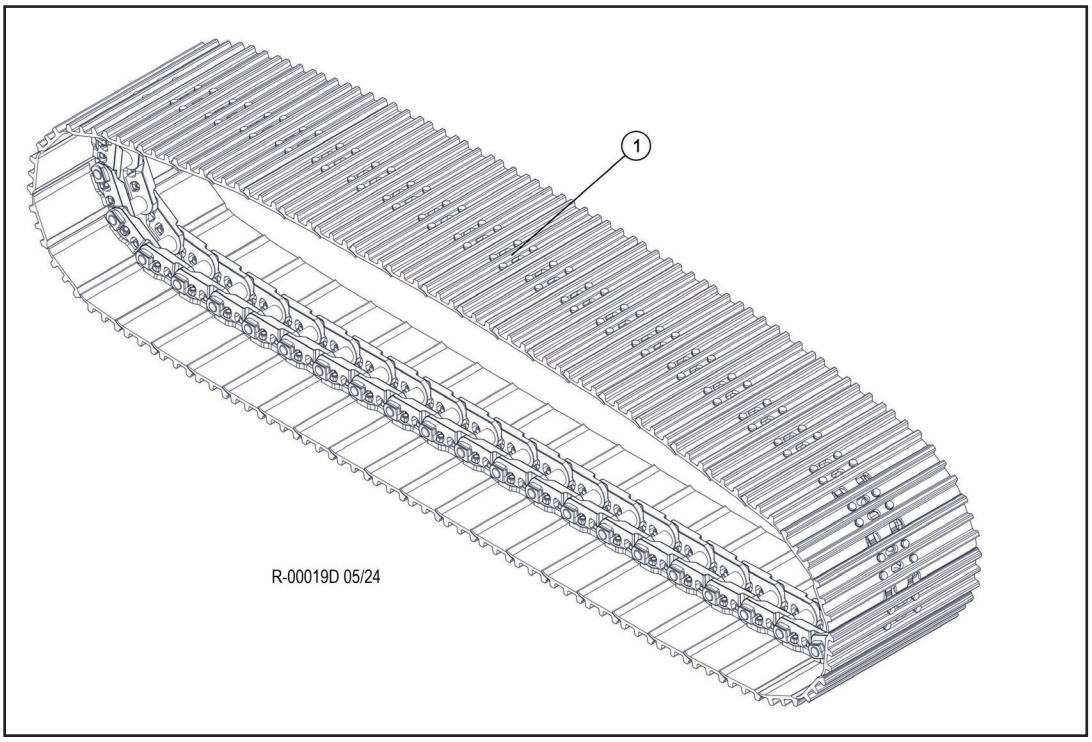


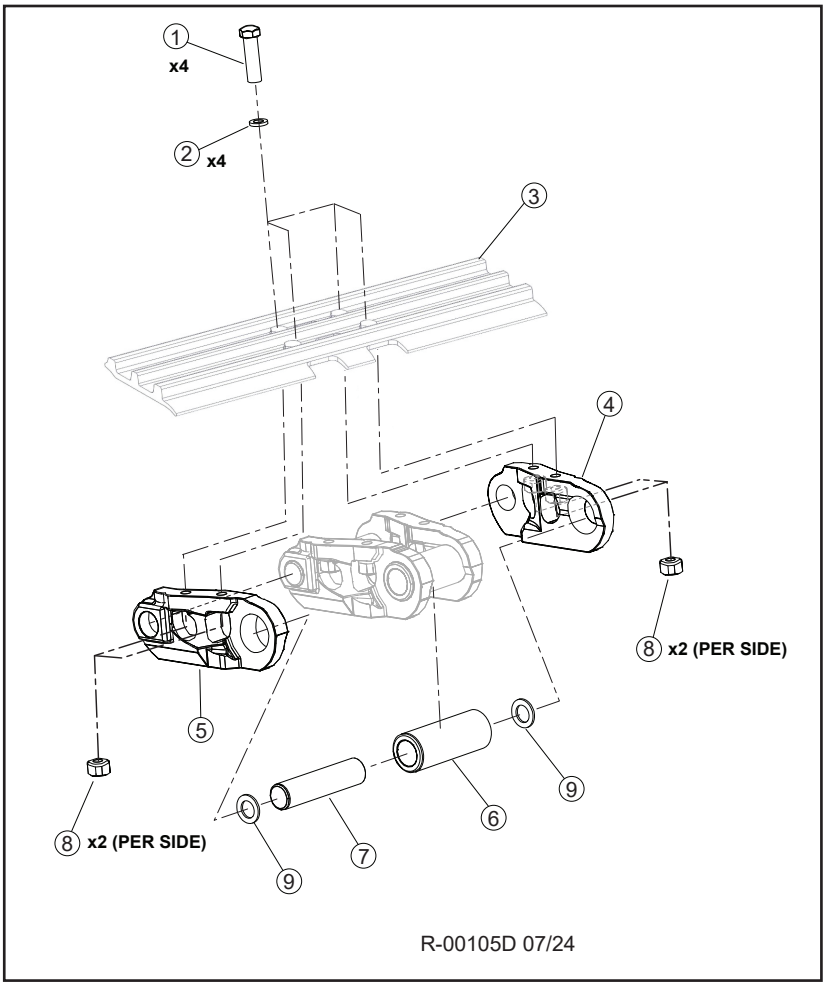

# R100-00170 - TRACK SHOE U. 8P, 48L T850 BERCO - 725D

| Item | Part # | Description | Qty. |
|---|---|---|---|
| 1 | 54499 | TRACK, RAIL W/850 TG (48 LINK) D6 - BERCO | 1 |

| Item | Part # | Description | Qty. |
|---|---|---|---|
| 1 | 17185 | BOLT, TRACK SHOE | 180 |
| 2 | N/A | WASHERS | 180 |
| 3 | CR5499A | TRACK SHOE | 45 |
| 4 | CR5491 | LINK, TRACK - LH | 45 |
| 5 | CR5490 | LINK, TRACK - RH | 45 |
| 6 | CR6298 | BUSHING | 1 |
| 7 | CR5492 | PIN | 2 |
| 8 | FT2111 | NUT, TRACK SHOE | 180 |
| 9 | CR6292 | SEAL, LINKS | 88 |
| * | CR5493 | PIN, TRACK MASTER - 325 | |

# R100-00180 - TRACK SHOE U. 8P, 48L T850 CAT - 725D

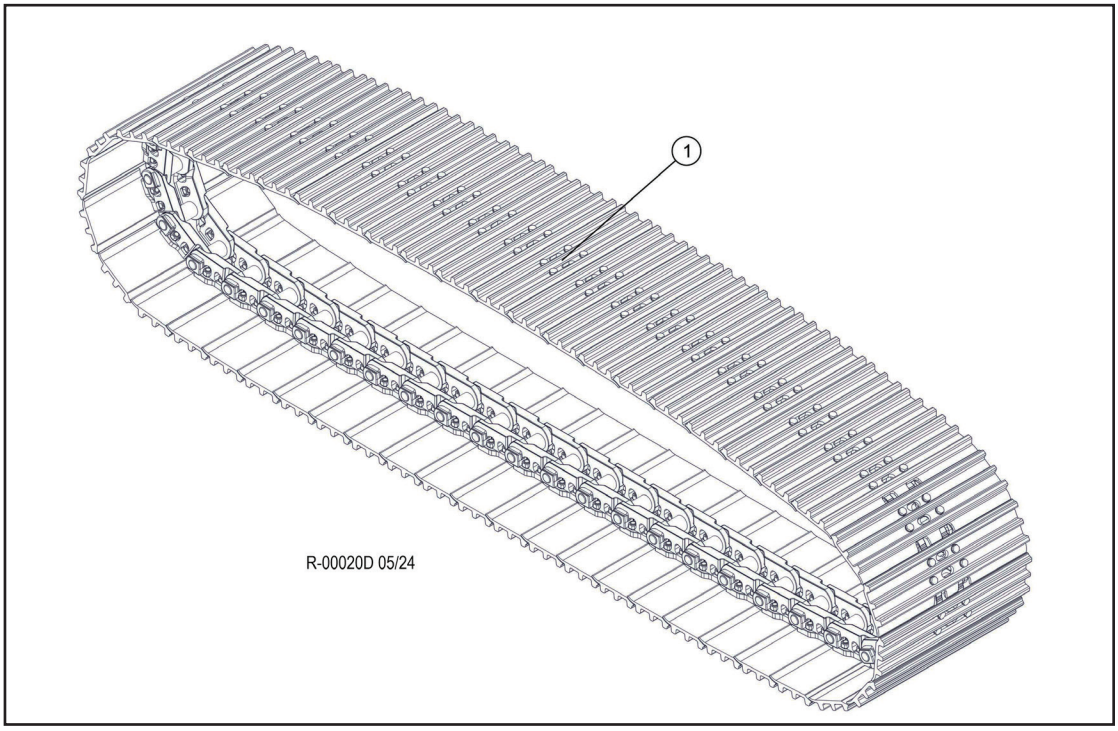


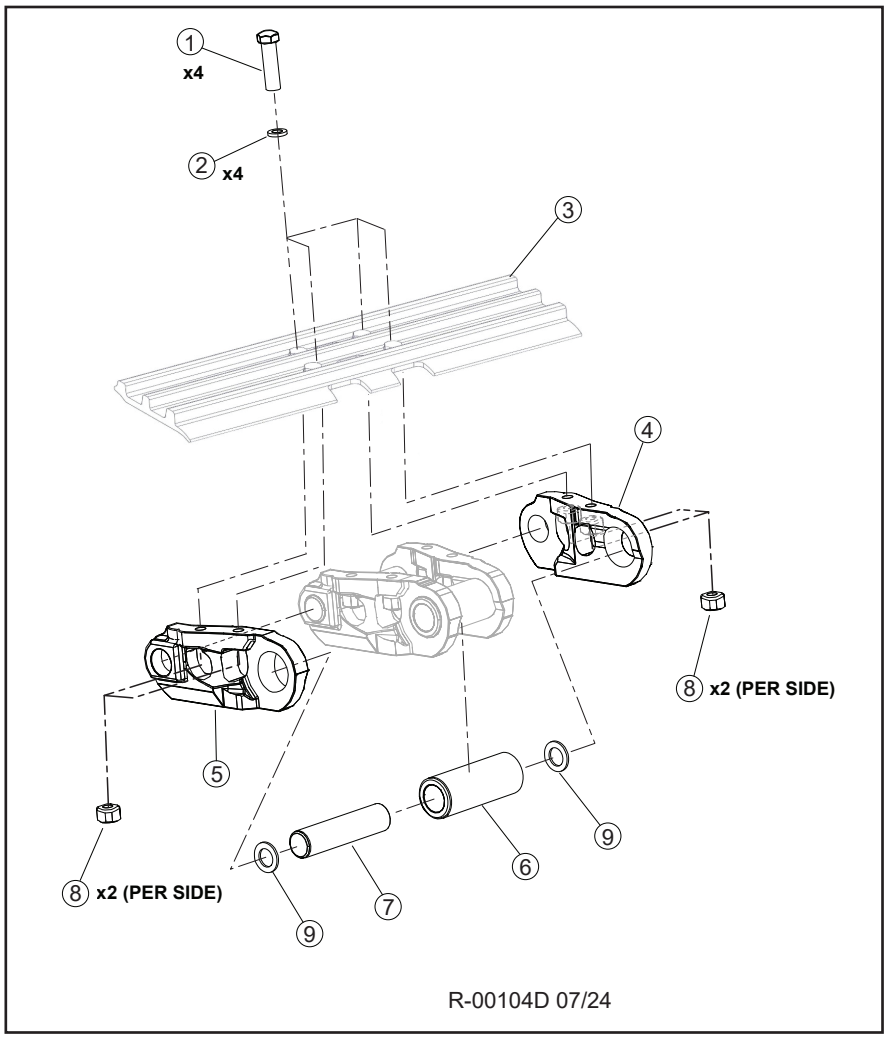

# R100-00180 - TRACK SHOE U. 8P, 48L T850 CAT - 725D

| Item | Part # | Description | Qty. |
|---|---|---|---|
| 1 | 58311 | TRACK, RAIL W/850 TG (48 LINK) D6 - CAT | 1 |

| Item | Part # | Description | Qty. |
|---|---|---|---|
| 1 | 17185 | BOLT, TRACK SHOE | 180 |
| 2 | N/A | WASHERS | 180 |
| 3 | SEE DESCRIPTION | TRACK SHOE CALL | - |
| 4 | CR5491 | LINK, TRACK LH (325) | 45 |
| 5 | CR5490 | LINK, TRACK - RH (325) | 45 |
| 6 | CR5493 | BUSHING | 1 |
| 7 | CR6293 | PIN | 2 |
| 8 | 17186 | NUT, TRACK SHOE | 180 |
| 9 | CR6292 | SEAL, LINKS | 88 |
| * | 21401 | PIN, TRACK MASTER - 325 | 1 |

# R100-00190 - TRACK SHOE U. 8.5P, 45L S600 BERCO - 735D

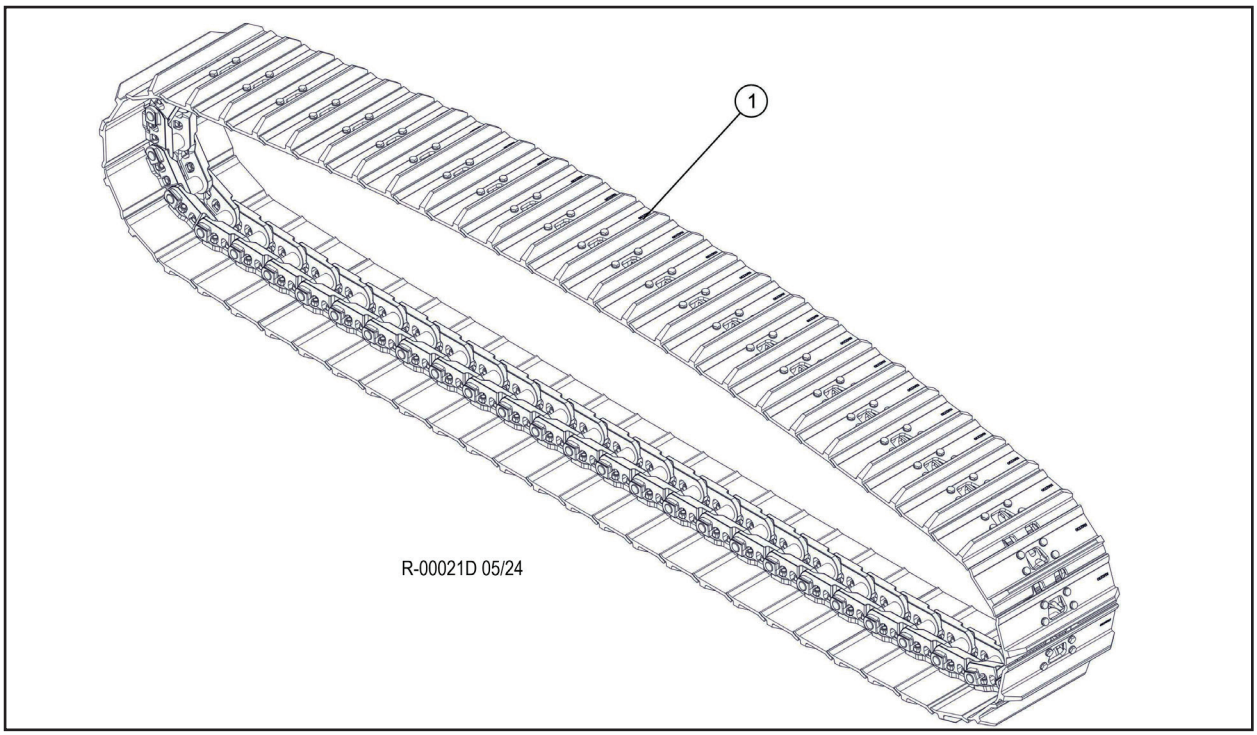


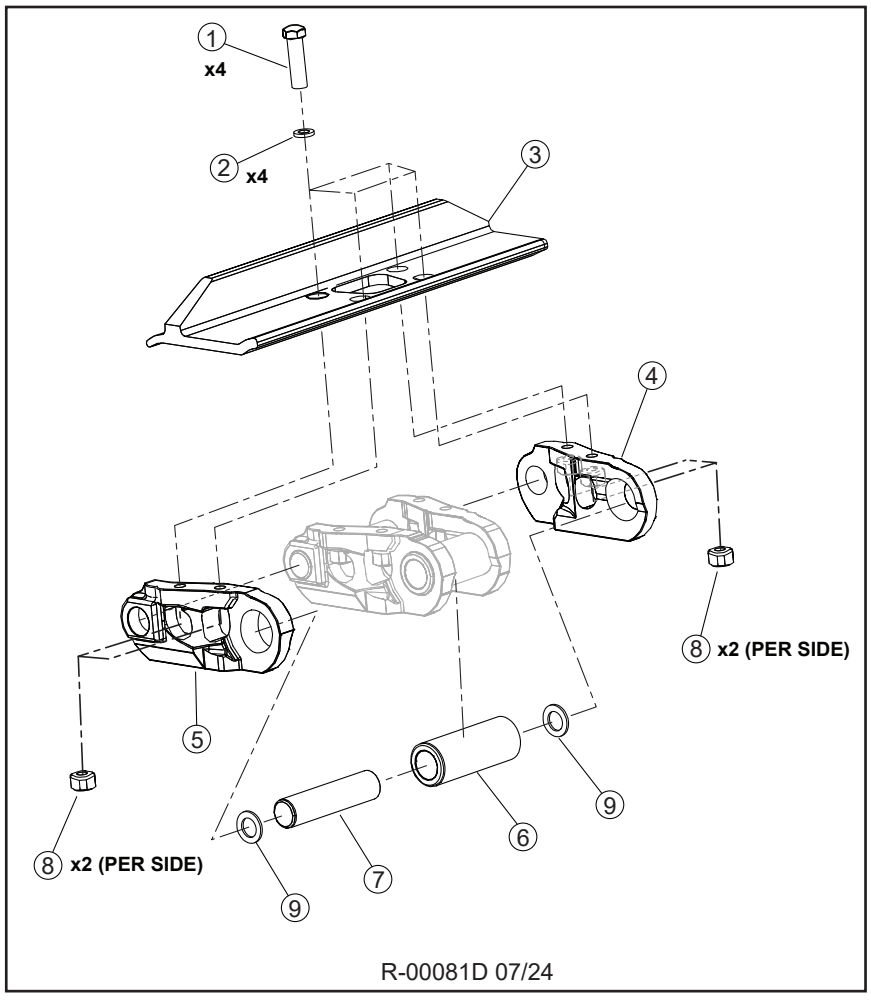

# R100-00190 - TRACK SHOE U. 8.5P, 45L S600 BERCO - 735D

| Item | Part # | Description | Qty. |
|---|---|---|---|
| 1 | 53101 | TRACK, RAIL W/600 SINGLE D-7 BERCO 45 | 1 |

| Item | Part # | Description | Qty. |
|---|---|---|---|
| 1 | 18354 | BOLT, TRACK SHOE | 192 |
| 2 | N/A | WASHER | 192 |
| 3 | 17861 | SHOE - 600 SINGLE | 48 |
| 4 | CR5914 | LINK (RIGHT) | 48 |
| 5 | CR5915 | LINK (LEFT) | 48 |
| 6 | 56138 | BUSHING | 47 |
| - | 56140 | BUSHING, MASTER LINK | 1 |
| 7 | 56567 | PIN | 47 |
| - | 698540 | PIN, MASTER LINK | 1 |
| 8 | 17864 | NUT, TRACK SHOE | 192 |
| | 56555 | SEAL, LINK | 94 |

# R100-00200 - TRACK SHOE U. 8.5P, 45L S600 HD BERCO - 735D

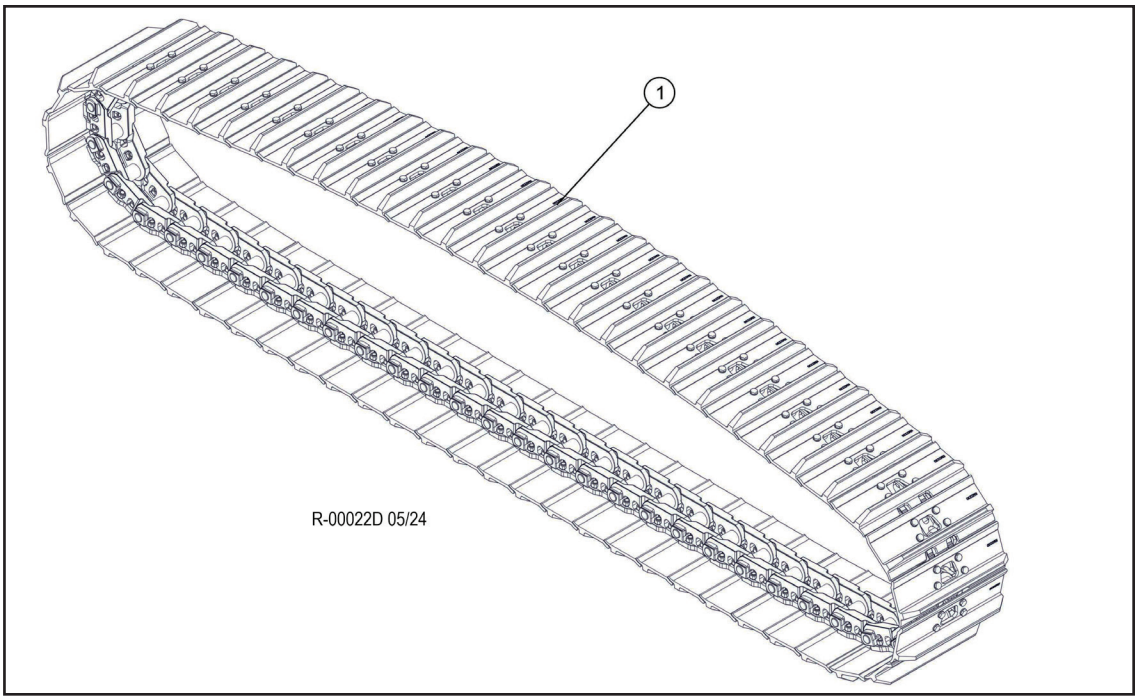


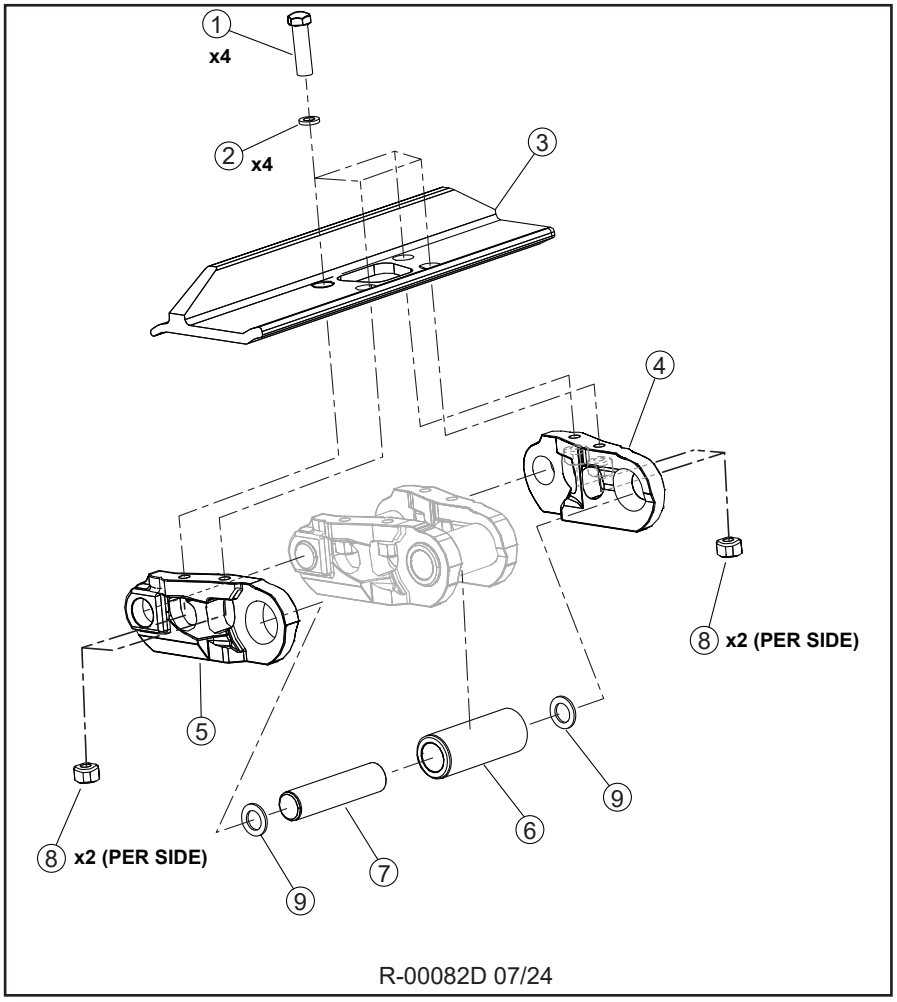

# R100-00200 - TRACK SHOE U. 8.5P, 45L S600 HD BERCO - 735D

| Item | Part # | Description | Qty. |
|---|---|---|---|
| 1 | 55086 | TRACK, RAIL W/600 SG - D7G HEAVY DUTY 45 | 1 |

| Item | Part # | Description | Qty. |
|---|---|---|---|
| 1 | SI 878 | BOLT, TRACK SHOE | 180 |
| 2 | N/A | WASHER | 180 |
| 3 | KM2230 610 | SHOE - 600 SINGLE | 45 |
| 4 | SI 649A | LINK (RIGHT) | 45 |
| 5 | SI 650a | LINK (LEFT) | 45 |
| 6 | SI 877 | BUSHING | 44 |
| - | SI 607 | BUSHING, MASTER LINK | 1 |
| 7 | SI 604 | PIN | 44 |
| - | SI 876 | PIN, MASTER LINK | 1 |
| 8 | SI 652 | NUT, TRACK SHOE | 180 |
| 9 | 698560 | SEAL, LINK | 88 |
| - | 58368 | TRACK LINK REPAIR | 1 |

# R100-00210 - TRACK SHOE U. 8.5P, 45L S600 CAT - 735D

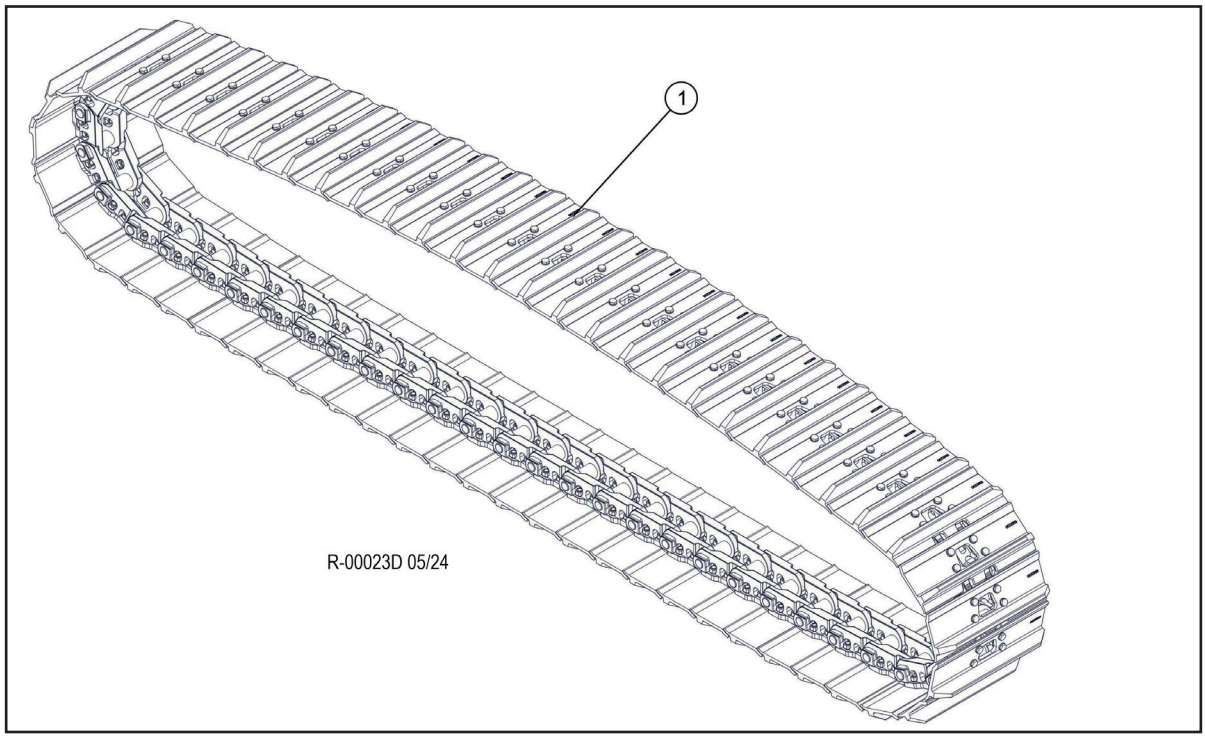


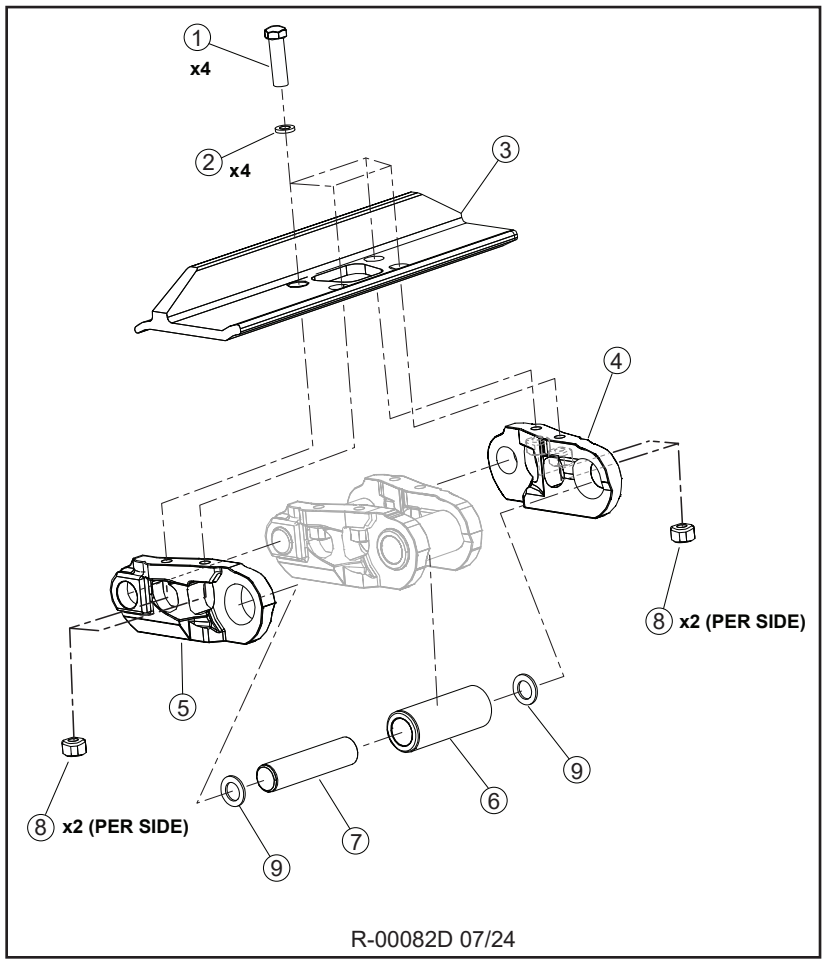

# R100-00210 - TRACK SHOE U. 8.5P, 45L S600 CAT - 735D

| Item | Part # | Description | Qty. |
|---|---|---|---|
| 1 | 55271 | TRACK, RAIL W/600 SINGLE D7 - CAT 45 LIN | 1 |

| Item | Part # | Description | Qty. |
|---|---|---|---|
| 1 | 18354 | BOLT, TRACK SHOE | 192 |
| 2 | N/A | WASHER | 192 |
| 3 | 17861 | SHOE - 600 SINGLE | 48 |
| 4 | CR5914 | LINK (RIGHT) | 48 |
| 5 | CR5915 | LINK (LEFT) | 48 |
| 6 | 56138 | BUSHING | 47 |
| - | 56140 | BUSHING, MASTER LINK | 1 |
| 7 | 56567 | PIN | 47 |
| - | 698540 | PIN, MASTER LINK | 1 |
| 8 | 17864 | NUT, TRACK SHOE | 192 |
| 9 | 56555 | SEAL, LINK | 94 |

# R100-00220 - TRACK SHOE U. 8.5P, 45L S700 BERCO - 735D

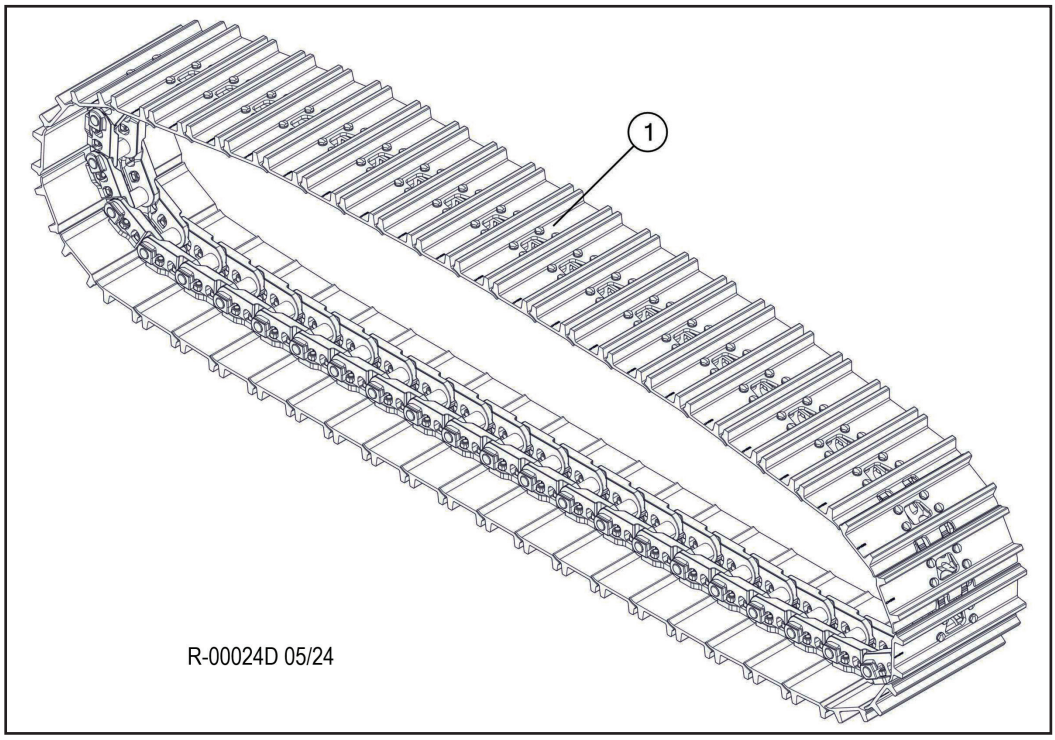


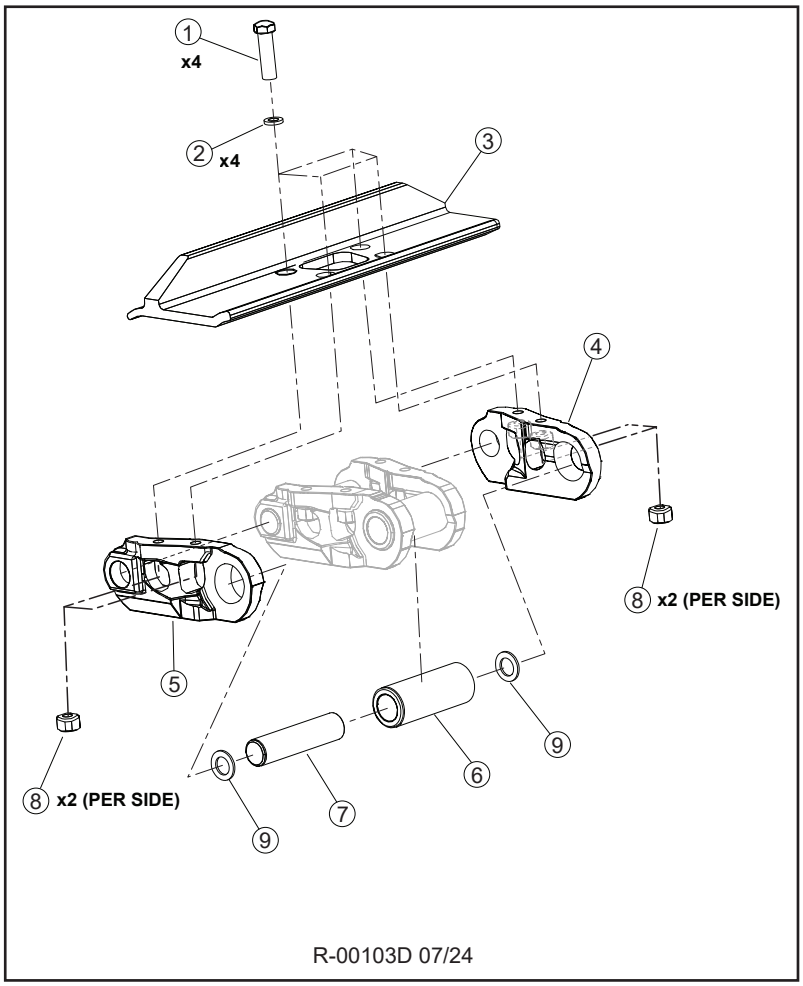

# R100-00220 - TRACK SHOE U. 8.5P, 45L S700 BERCO - 735D

| Item | Part # | Description | Qty. |
|---|---|---|---|
| 1 | 55480 | TRACK, RAIL W/600 DOUBLE D7 BERCO 45 LIN | 1 |

| Item | Part # | Description | Qty. |
|---|---|---|---|
| 1 | 18354 | BOLT, TRACK SHOE | 192 |
| 2 | N/A | WASHERS | 192 |
| 3 | 698530 | TRACK SHOE | - |
| 4 | CR5914 | LINK, TRACK LH (325) | 48 |
| 5 | CR5915 | LINK, TRACK - RH (325) | 48 |
| 6 | 56138 | BUSHING | 1 |
| 7 | 56567 | PIN | 47 |
| 8 | 17864 | NUT, TRACK SHOE | 192 |
| 9 | 56555 | SEAL, LINKS | 92 |
| * | 698540 | PIN, TRACK MASTER - 325 | 1 |

# R100-00230 - TRACK SHOE U. 8.5P, 45L S700 BERCO - TN/TL735D

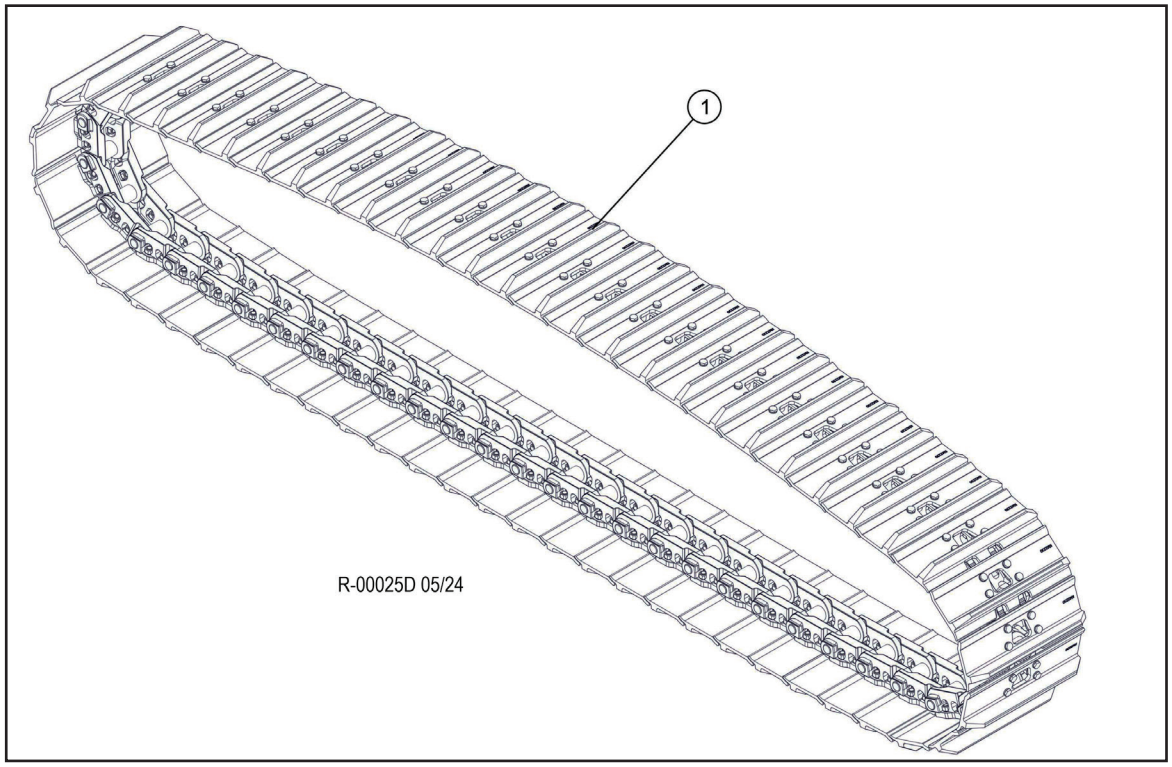


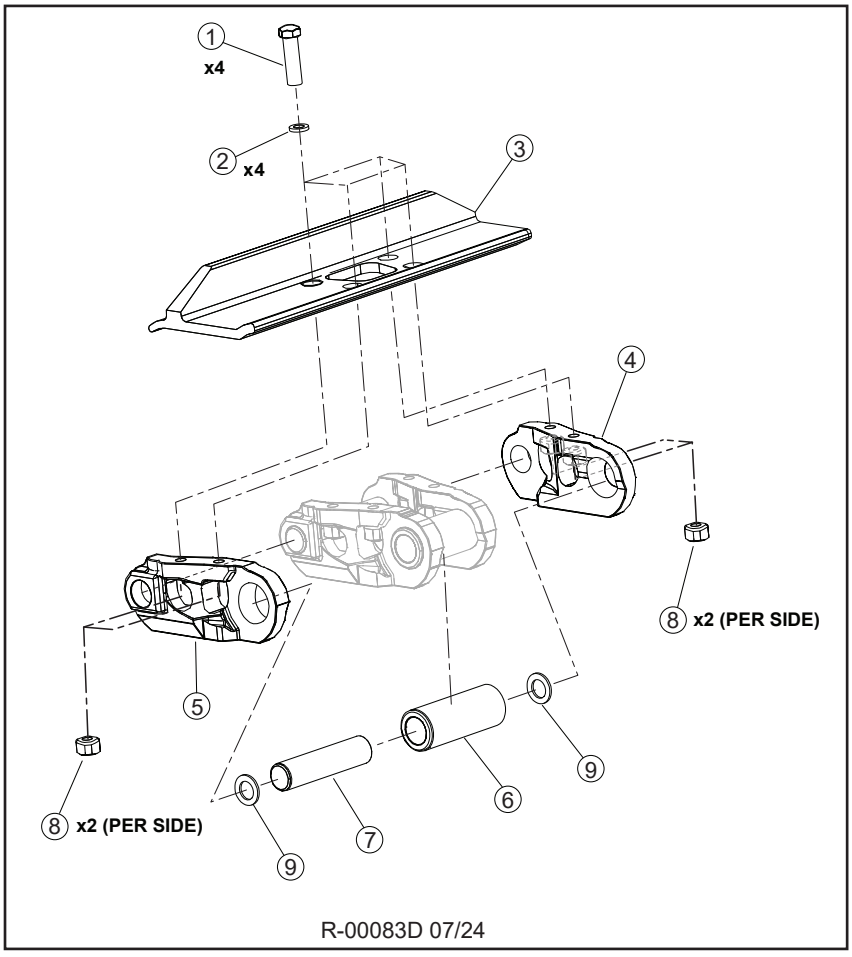

# R100-00230 - TRACK SHOE U. 8.5P, 45L S700 BERCO - TN/TL735D

| Item | Part # | Description | Qty. |
|---|---|---|---|
| 1 | 53271 | TRACK, RAIL W/700 SG (45LINK) D-7 BERCO | 1 |

| Item | Part # | Description | Qty. |
|---|---|---|---|
| 1 | 18354 | BOLT, TRACK SHOE | 192 |
| 2 | N/A | WASHERS | 192 |
| 3 | 698530 | TRACK SHOE | - |
| 4 | CR5914 | LINK, TRACK LH (325) | 48 |
| 5 | CR5915 | LINK, TRACK - RH (325) | 48 |
| 6 | 56138 | BUSHING | 1 |
| 7 | 56567 | PIN | 47 |
| 8 | 17864 | NUT, TRACK SHOE | 192 |
| 9 | 56555 | SEAL, LINKS | 92 |
| * | 698540 | PIN, TRACK MASTER - 325 | 1 |

# R100-00240 - TRACK SHOE U. 8.5P, 45L S700 BERCO - HD - TN/TL735D

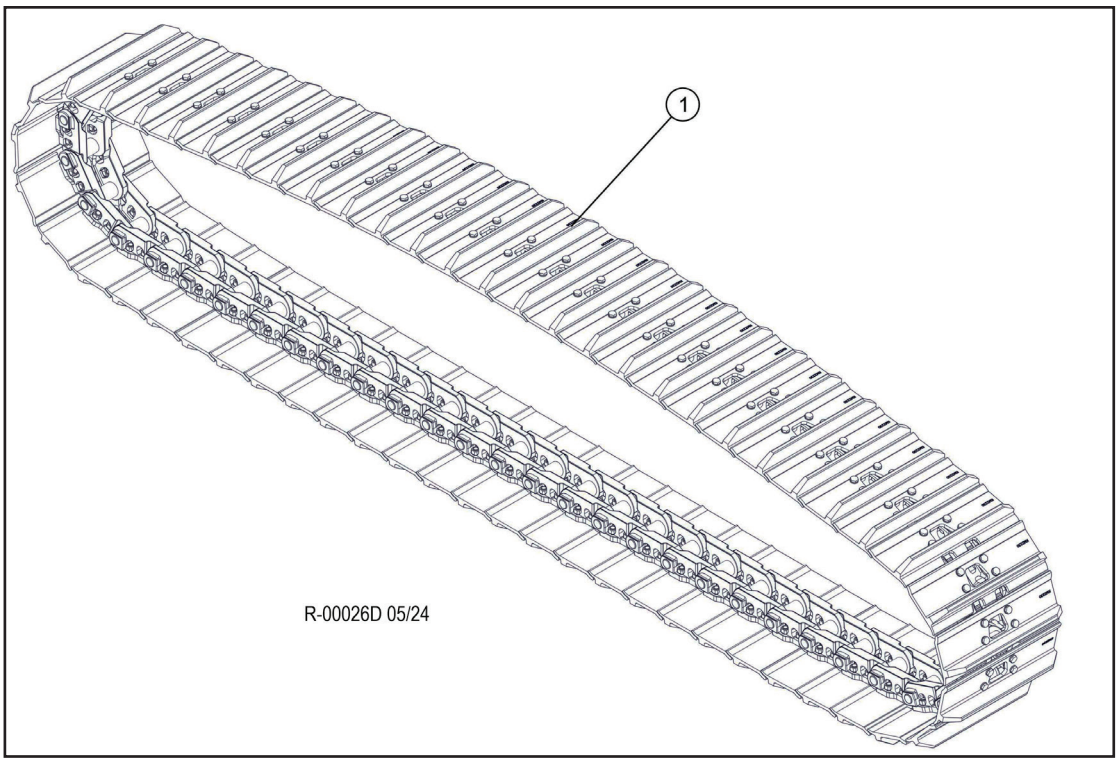


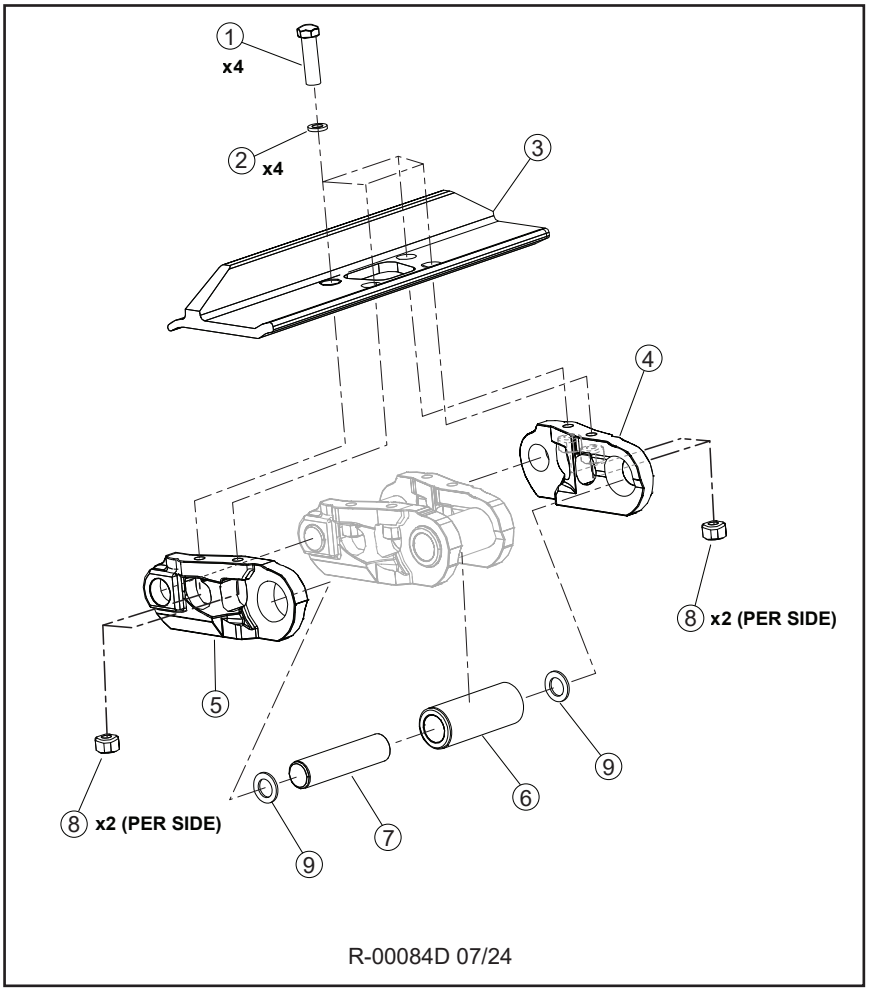

# R100-00240 - TRACK SHOE U. 8.5P, 45L S700 BERCO - HD - TN/TL735D

| Item | Part # | Description | Qty. |
|---|---|---|---|
| 1 | 55611 | TRACK, RAIL W/700 SG (45 LINK) D7G BERCO | 1 |

| Item | Part # | Description | Qty. |
|---|---|---|---|
| 1 | SI 878 | BOLT, TRACK SHOE | 180 |
| 2 | N/A | WASHER | 180 |
| 3 | 58357 | SHOE, TRACK - 710 mm D7G | 45 |
| 4 | SI 649A | LINK (RIGHT) | 45 |
| 5 | SI 650a | LINK (LEFT) | 45 |
| 6 | SI 877 | BUSHING | 44 |
| - | 56142 | BUSHING, MASTER LINK | 1 |
| 7 | 56141 | PIN | 44 |
| - | SI 876 | PIN, MASTER LINK | 1 |
| 8 | SI 652 | NUT, TRACK SHOE | 180 |
| 9 | 698560 | SEAL, LINK | 88 |
| - | 58368 | TRACK LINK REPAIR | 1 |

# R100-00250 - TRACK SHOE U. 8.5P, 45L D700 BERCO - 735D

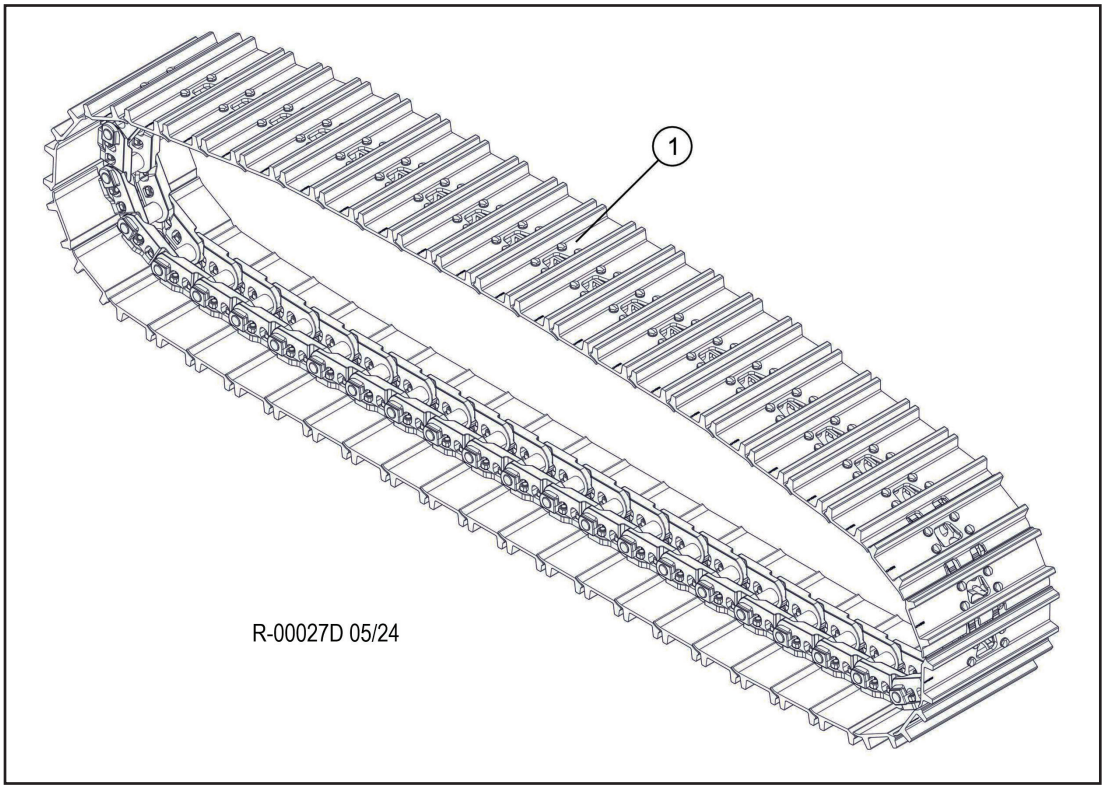


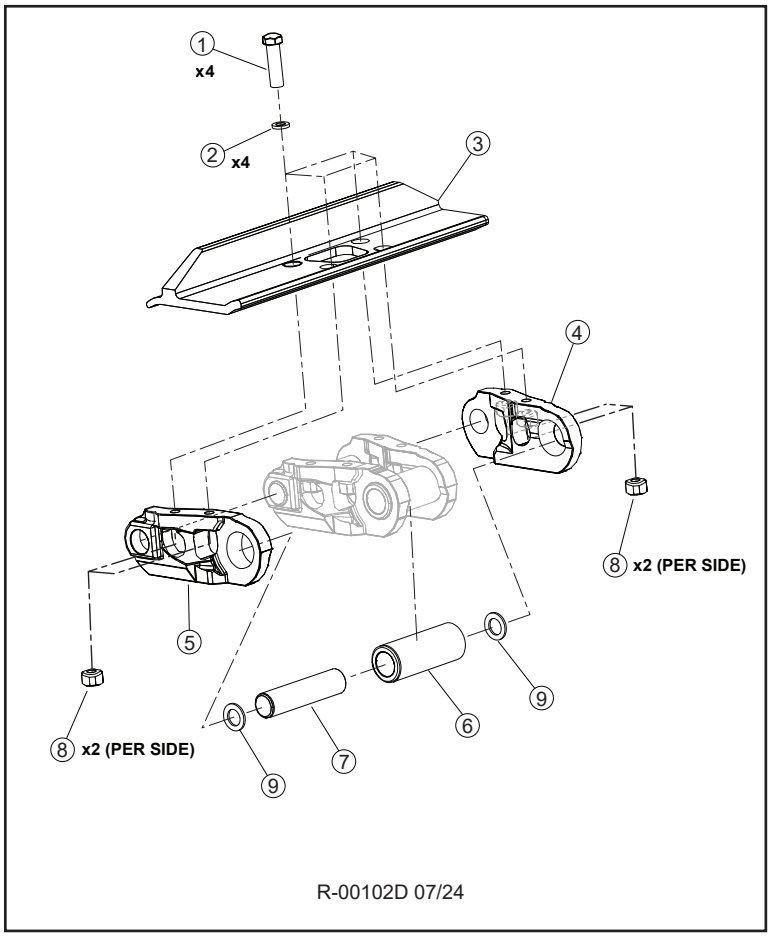

# R100-00250 - TRACK SHOE U. 8.5P, 45L D700 BERCO - 735D

| Item | Part # | Description | Qty. |
|---|---|---|---|
| 1 | 53803 | TRACK, RAIL W/700 DG (45 LINK) D7 BERCO | 1 |

| Item | Part # | Description | Qty. |
|---|---|---|---|
| 1 | 18354 | BOLT, TRACK SHOE | 192 |
| 2 | N/A | WASHERS | 192 |
| 3 | 698530 | TRACK SHOE | - |
| 4 | CR5914 | LINK, TRACK LH (325) | 48 |
| 5 | CR5915 | LINK, TRACK - RH (325) | 48 |
| 6 | 56138 | BUSHING | 1 |
| 7 | 56537 | PIN | 47 |
| 8 | 17864 | NUT, TRACK SHOE | 192 |
| 9 | 56555 | SEAL, LINKS | 92 |
| * | 698540 | PIN, TRACK MASTER - 325 | 1 |

# R100-00260 - TRACK SHOE U. 8.5P, 45L D700 HD BERCO - 735D

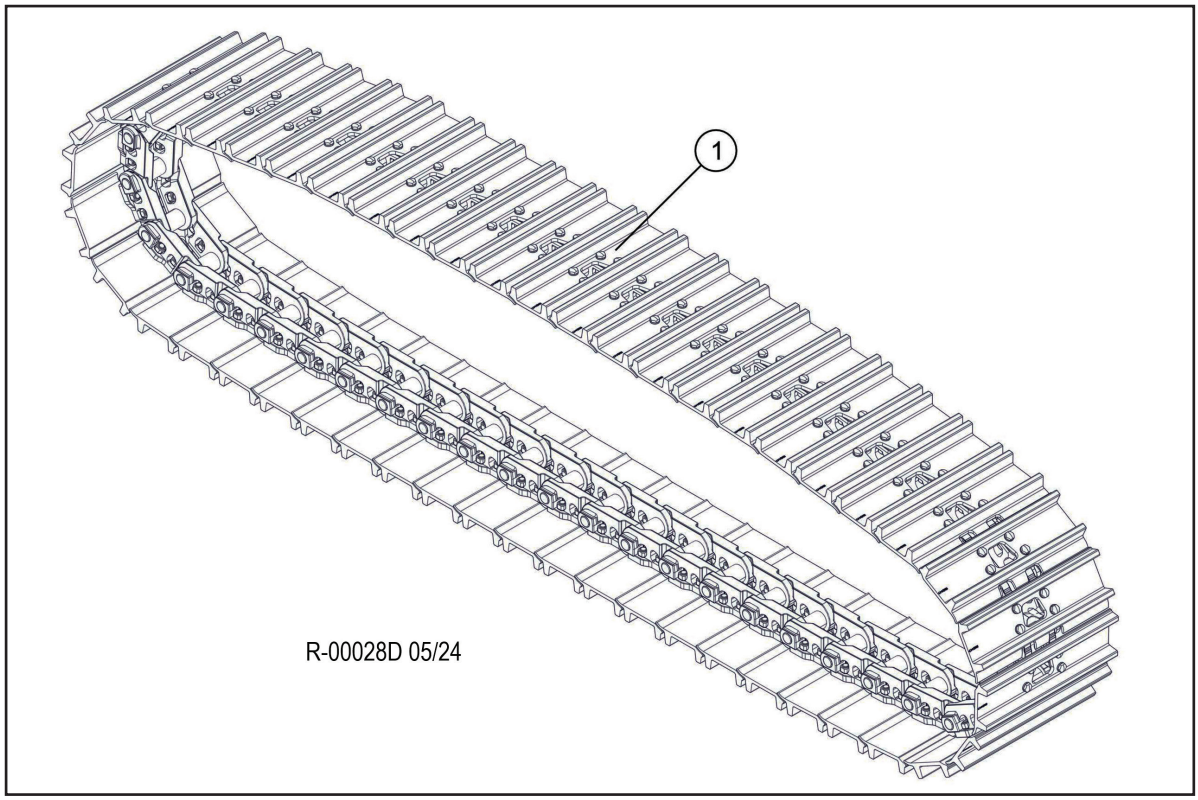


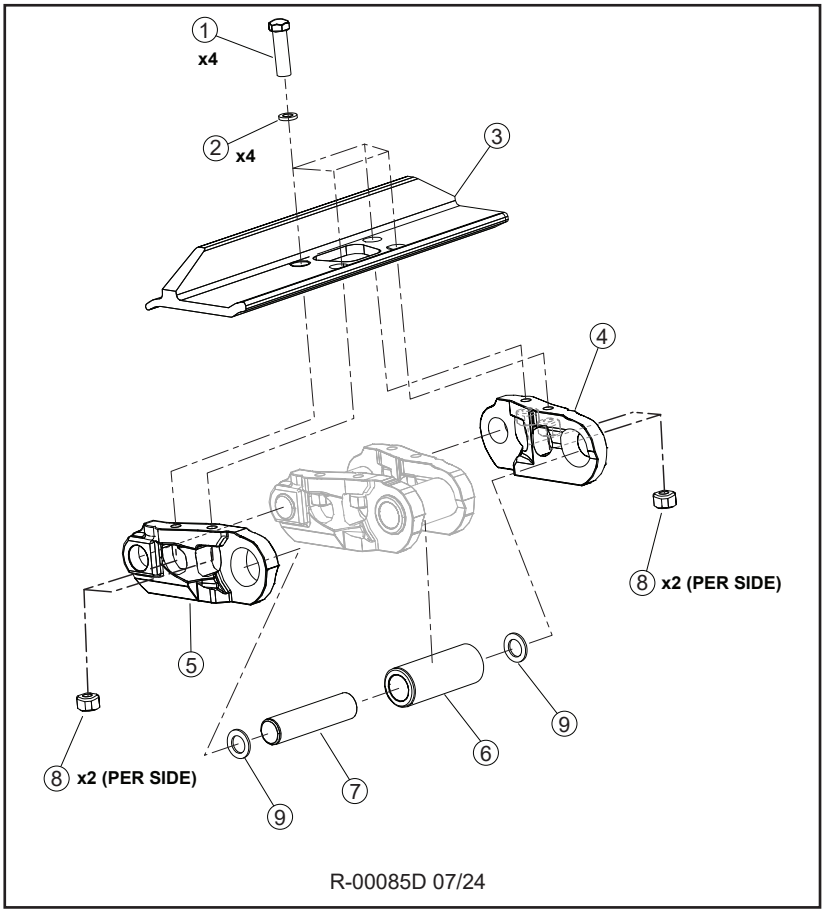

# R100-00260 - TRACK SHOE U. 8.5P, 45L D700 HD BERCO - 735D

| Item | Part # | Description | Qty. |
|---|---|---|---|
| 1 | 55682 | TRACK, RAIL W/700 DG - D7G (45 LINK) HD | 1 |

| Item | Part # | Description | Qty. |
|---|---|---|---|
| 1 | SI 878 | BOLT, TRACK SHOE | 180 |
| 2 | N/A | WASHER | 180 |
| 3 | 698570 | SHOE, TRACK - 700 MM | 45 |
| 4 | SI 649A | LINK (RIGHT) | 45 |
| 5 | SI 650A | LINK (LEFT) | 45 |
| 6 | SI 877 | BUSHING | 44 |
| - | 56142 | BUSHING, MASTER LINK | 1 |
| 7 | 56141 | PIN | 44 |
| - | SI 876 | PIN, MASTER LINK | 1 |
| 8 | SI 652 | NUT, TRACK SHOE | 180 |
| 9 | 698560 | SEAL, LINK | 88 |

# R100-00270 - TRACK SHOE U. 8.5P, 45L D800 HD BERCO - 735D

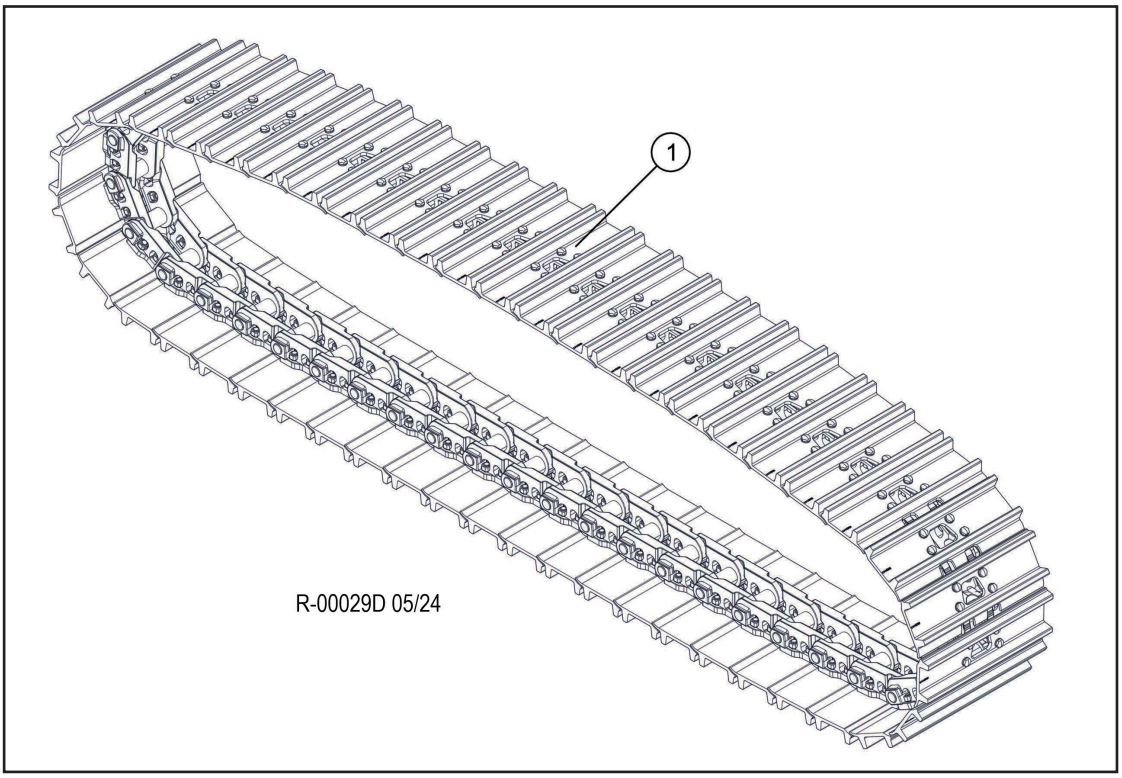


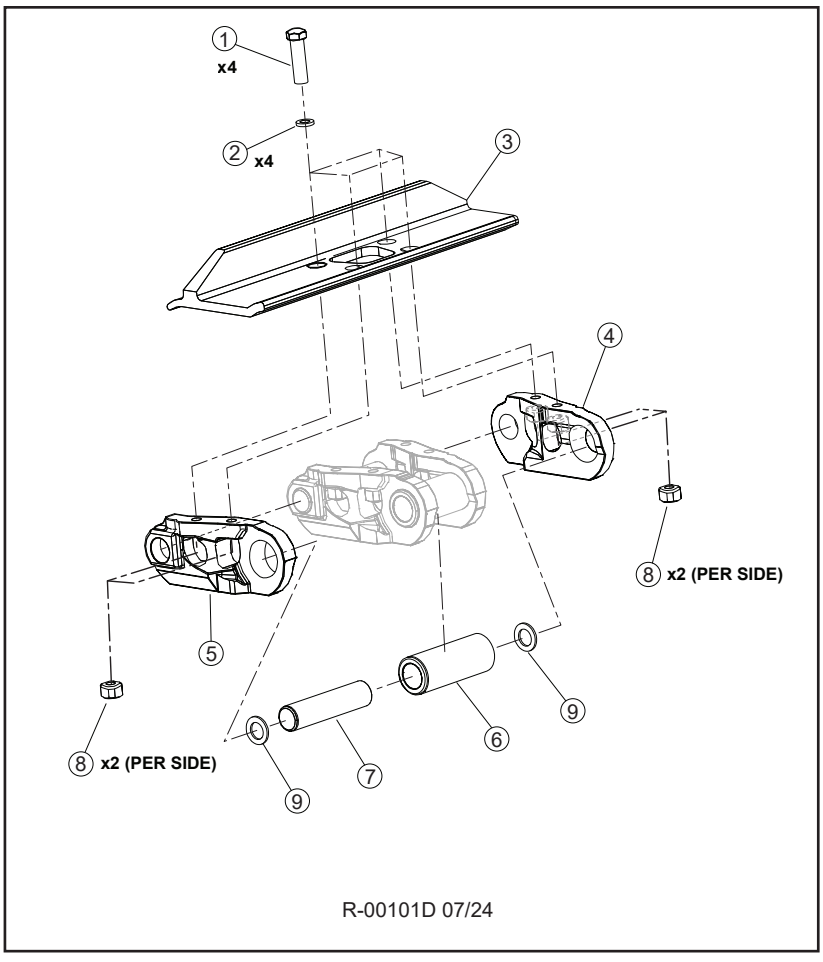

# R100-00270 - TRACK SHOE U. 8.5P, 45L D800 HD BERCO - 735D

| Item | Part # | Description | Qty. |
|---|---|---|---|
| 1 | 58325 | TRACK, RAIL W/800 DG (45 LINK) D7G - HD | 1 |

| Item | Part # | Description | Qty. |
|---|---|---|---|
| 1 | SI 878 | BOLT, TRACK SHOE | 180 |
| 2 | N/A | WASHERS | 18 |
| 3 | 698570 | TRACK SHOE | 45 |
| 4 | SI 649A | LINK, TRACK LH (325) | 45 |
| 5 | SI 650A | LINK, TRACK - RH (325) | 45 |
| 6 | SI 877 | BUSHING | 1 |
| 7 | 56141 | PIN | 44 |
| 8 | SI 652 | NUT, TRACK SHOE | 180 |
| 9 | 698560 | SEAL, LINKS | 88 |
| * | 698590 | PIN, TRACK MASTER | 1 |

# R100-00280 - TRACK SHOE D7 48 LINK 600MM SG - 745D, 755D

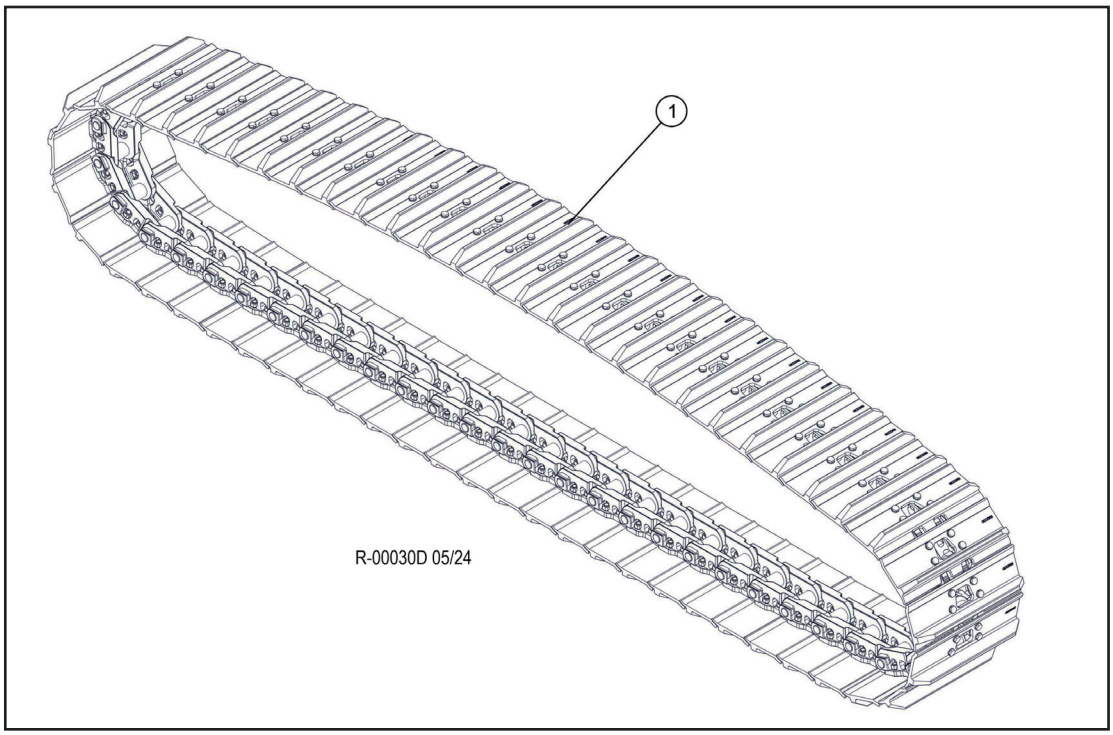


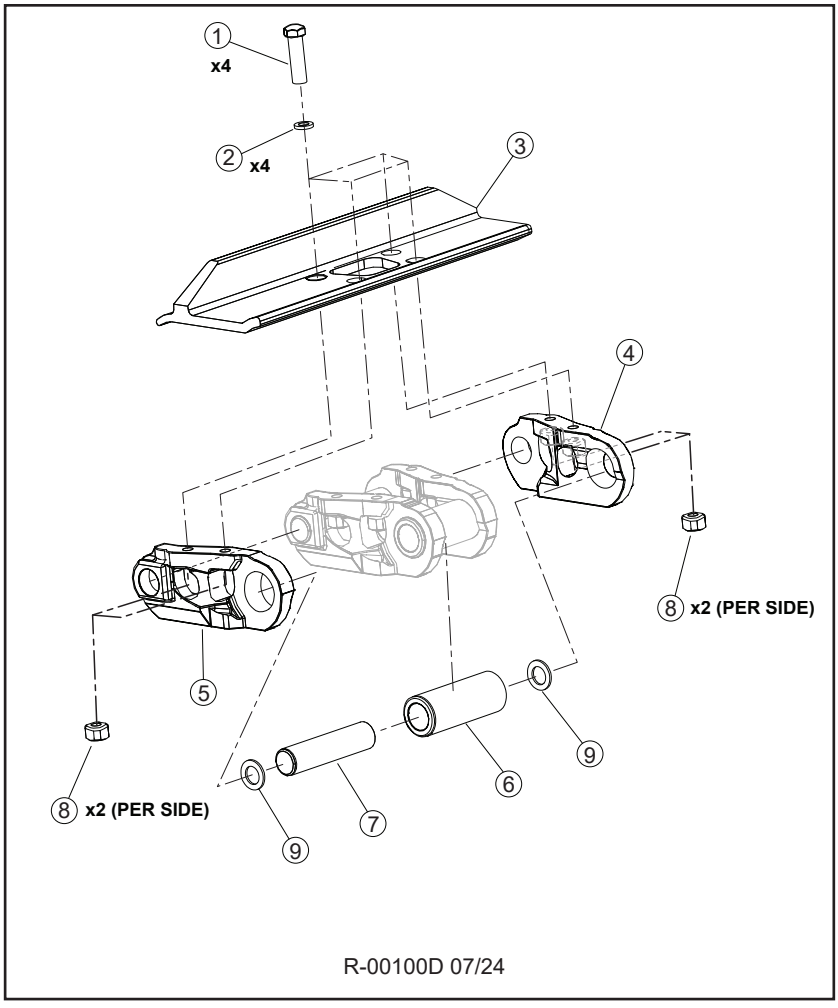

# R100-00280 - TRACK SHOE D7 48 LINK 600MM SG - 745D, 755D

| Item | Part # | Description | Qty. |
|---|---|---|---|
| 1 | 55481 | TRACK, RAIL W/600 SINGLE D7 - 48 LINKS | 2 |

| Item | Part # | Description | Qty. |
|---|---|---|---|
| 1 | 18354 | BOLT, TRACK SHOE | 192 |
| 2 | N/A | WASHERS | 192 |
| 3 | 17861 | TRACK SHOE | - |
| 4 | CR5915 | LINK, TRACK LH (325) | 48 |
| 5 | CR5914 | LINK, TRACK - RH (325) | 48 |
| 6 | 56138 | BUSHING | 47 |
| 7 | 56567 | PIN | 2 |
| 8 | 17864 | NUT, TRACK SHOE | 192 |
| 9 | 56555 | SEAL, LINKS | 94 |
| * | CR734 | PIN, TRACK MASTER - 325 | 1 |

# R100-00290 - TRACK SHOE D7 48 LINK 600MM HD SG - 745D, 755D

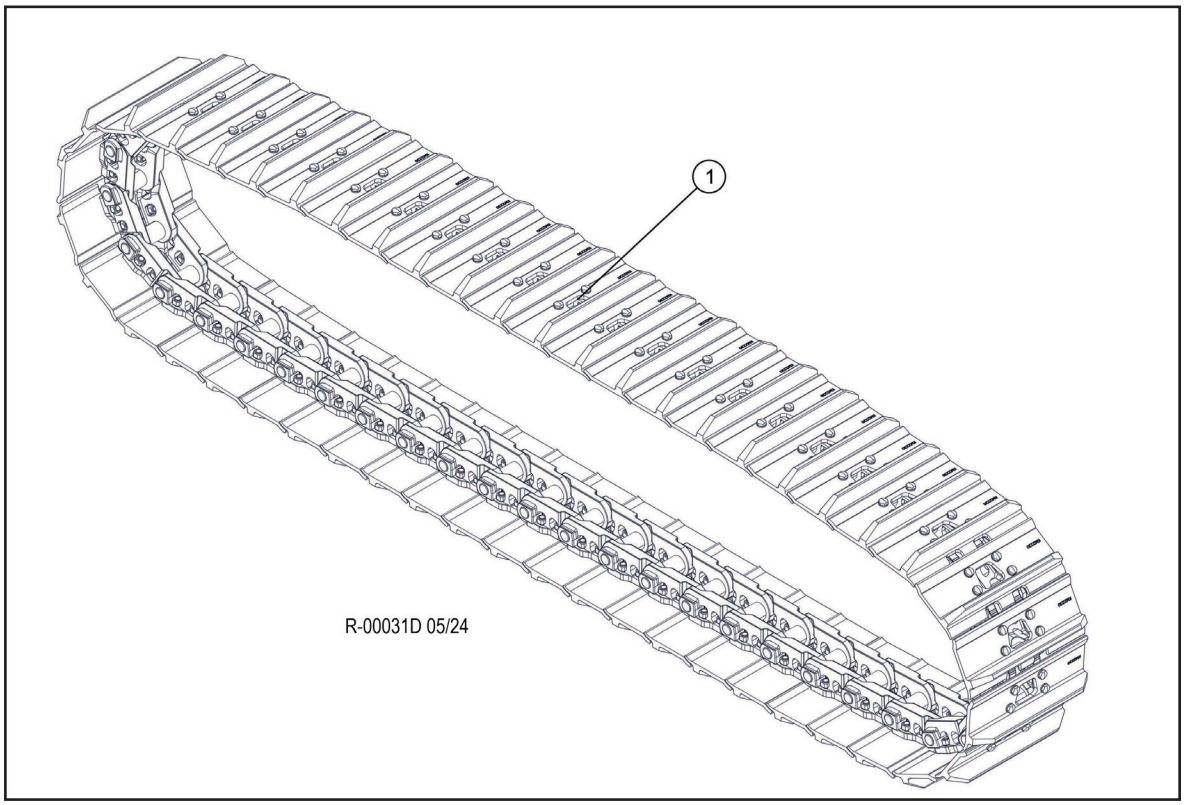


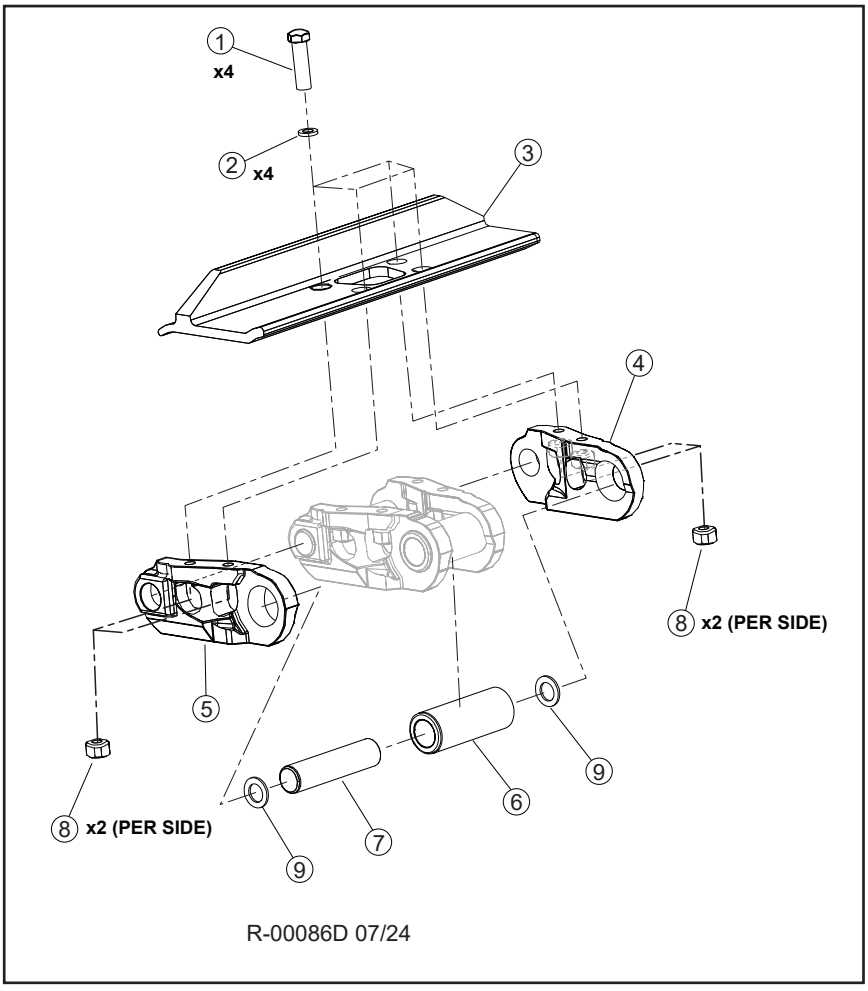

# R100-00290 - TRACK SHOE D7 48 LINK 600MM HD SG - 745D, 755D

| Item | Part # | Description | Qty. |
|---|---|---|---|
| 1 | 55319 | TRACK, RAIL W/600 SG-48 LINK D7G HEAVY D | 2 |

| Item | Part # | Description | Qty. |
|---|---|---|---|
| 1 | SI 878 | BOLT, TRACK SHOE | 180 |
| 2 | N/A | WASHER | 180 |
| 3 | KM2230 610 | SHOE - 600 SINGLE | 45 |
| 4 | SI 649A | LINK (RIGHT) | 45 |
| 5 | SI 650a | LINK (LEFT) | 45 |
| 6 | SI 877 | BUSHING | 44 |
| - | 56142 | BUSHING, MASTER LINK | 1 |
| 7 | 56141 | PIN | 44 |
| - | SI 876 | PIN, MASTER LINK | 1 |
| 8 | SI 652 | NUT, TRACK SHOE | 180 |
| 9 | 698560 | SEAL, LINK | 88 |
| - | 58368 | TRACK LINK REPAIR | 1 |

# R100-00300 - TRACK SHOE D7 48 LINK 600MM SG - 745D, 755D

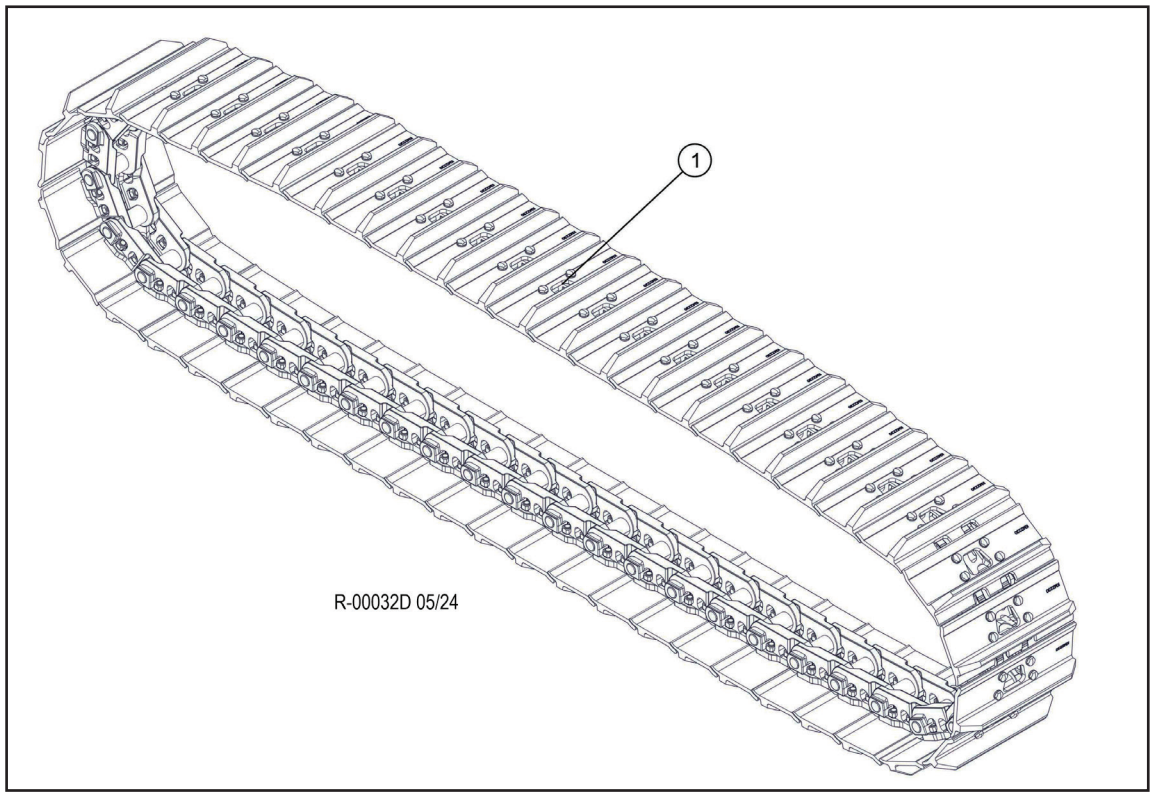


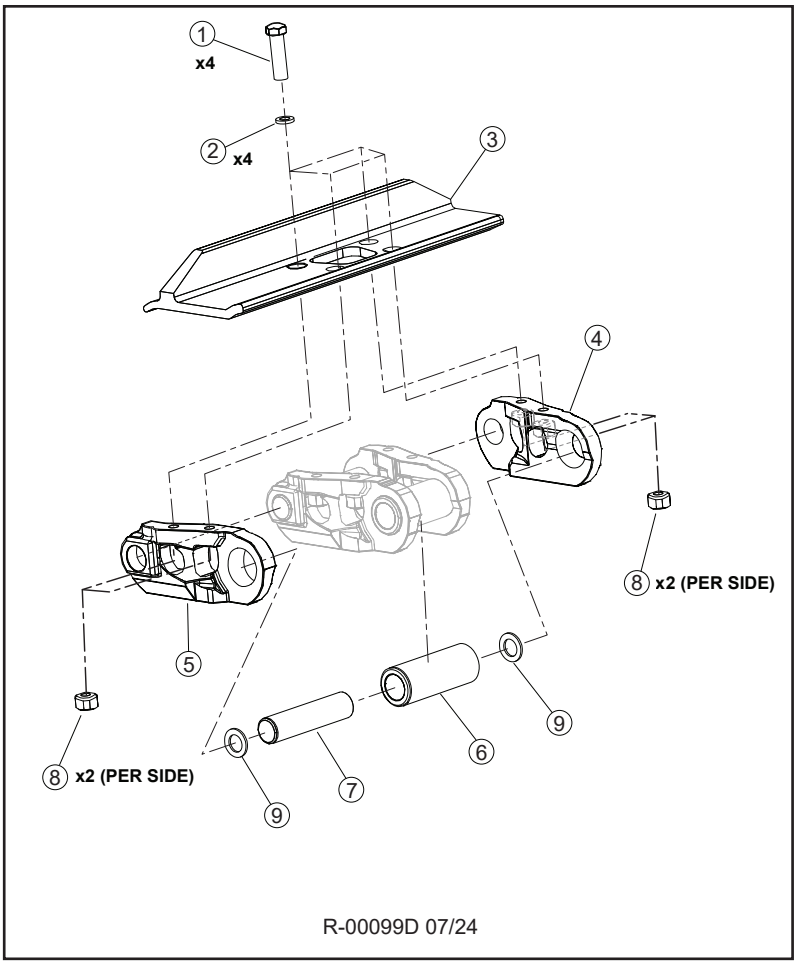

# R100-00300 - TRACK SHOE D7 48 LINK 600MM SG - 745D, 755D

| Item | Part # | Description | Qty. |
|---|---|---|---|
| 1 | 57577 | TRACK, RAIL W/600-48 LINK D7 (CAT BRAND) | 2 |

| Item | Part # | Description | Qty. |
|---|---|---|---|
| 1 | 18354 | BOLT, TRACK SHOE | 180 |
| 2 | N/A | WASHERS | 180 |
| 3 | 17861 | TRACK SHOE 330/600MM SG | 45 |
| 4 | 21450 | LINK, TRACK LH (330) | 45 |
| 5 | 21451 | LINK, TRACK - RH (330) | 45 |
| 6 | 698440 | BUSHING | 44 |
| * | 201-0828 | BUSHING, MASTER LINK | 1 |
| 7 | 21456 | PIN | 44 |
| * | 21457 | PIN, TRACK MASTER - 330 | 1 |
| 8 | 17864 | NUT, TRACK SHOE | 180 |
| 9 | 179-3426 | SEAL, LINKS | 88 |
| * | 179-3428 | SEAL, MASTER LINK | 2 |

# R100-00310 - TRACK RAIL W/SHOE D7 48 LINK 600MM TALL - 745D, 755D

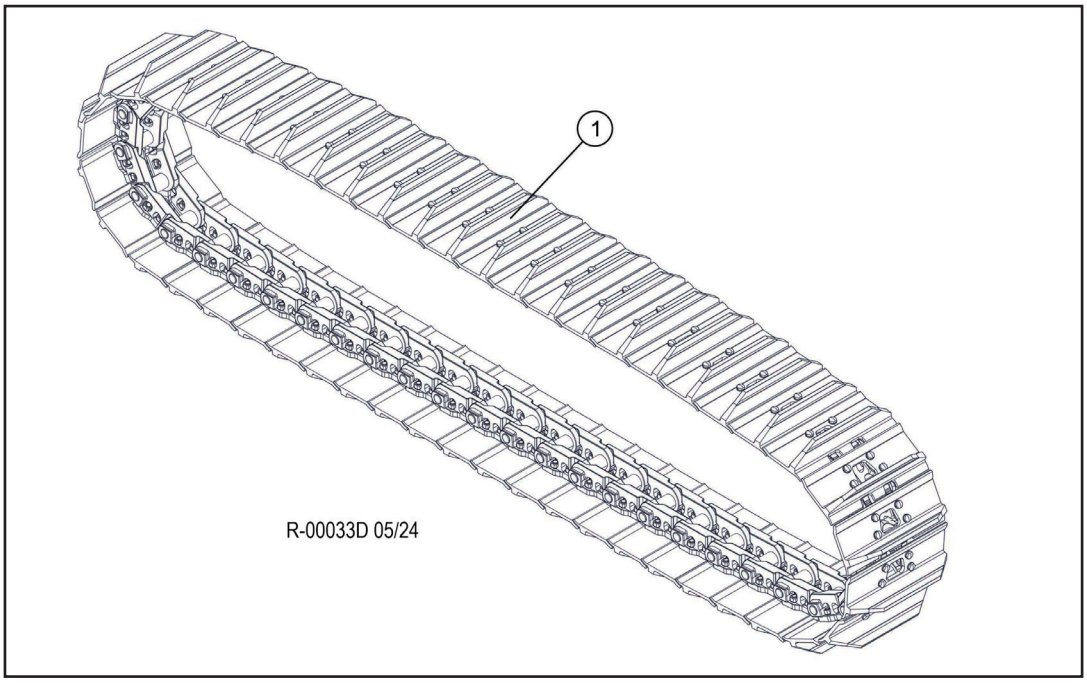


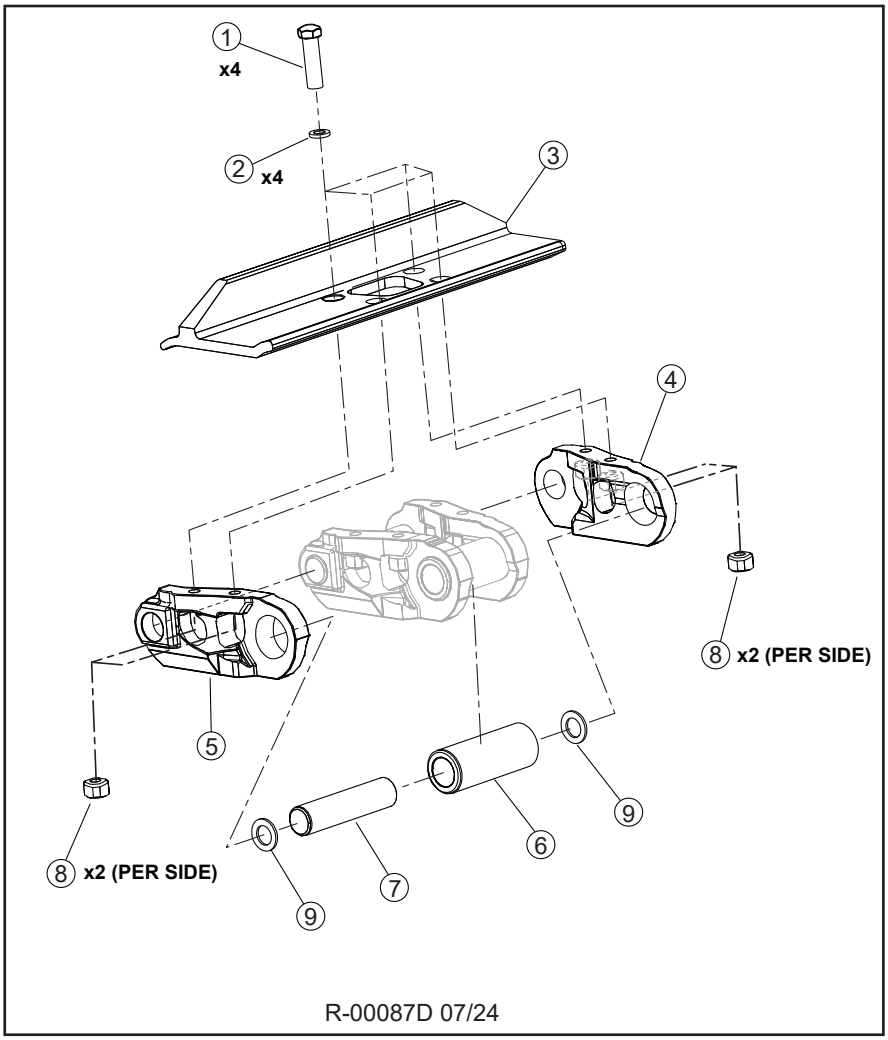

# R100-00310 - TRACK RAIL W/SHOE D7 48 LINK 600MM TALL - 745D, 755D

| Item | Part # | Description | Qty. |
|---|---|---|---|
| 1 | 58600 | TRACK, RAIL W/600 SG-48 LINK D7G TALL GR | 2 |

| Item | Part # | Description | Qty. |
|---|---|---|---|
| 1 | SI 878 | BOLT, TRACK SHOE | 180 |
| 2 | N/A | WASHER | 180 |
| 3 | SH0027A-000-00 | SHOE - 600 SINGLE | 45 |
| 4 | SI 649A | LINK (RIGHT) | 45 |
| 5 | SI 650a | LINK (LEFT) | 45 |
| 6 | SI 877 | BUSHING | 44 |
| - | 56142 | BUSHING, MASTER LINK | 1 |
| 7 | 56141 | PIN | 44 |
| - | SI 876 | PIN, MASTER LINK | 1 |
| 8 | SI 652 | NUT, TRACK SHOE | 180 |
| 9 | 698560 | SEAL, LINK | 88 |
| - | 58368 | TRACK LINK REPAIR | 1 |

# R100-00320 - TRACK SHOE D7 48 LINK 700MM SG - 745D, 755D

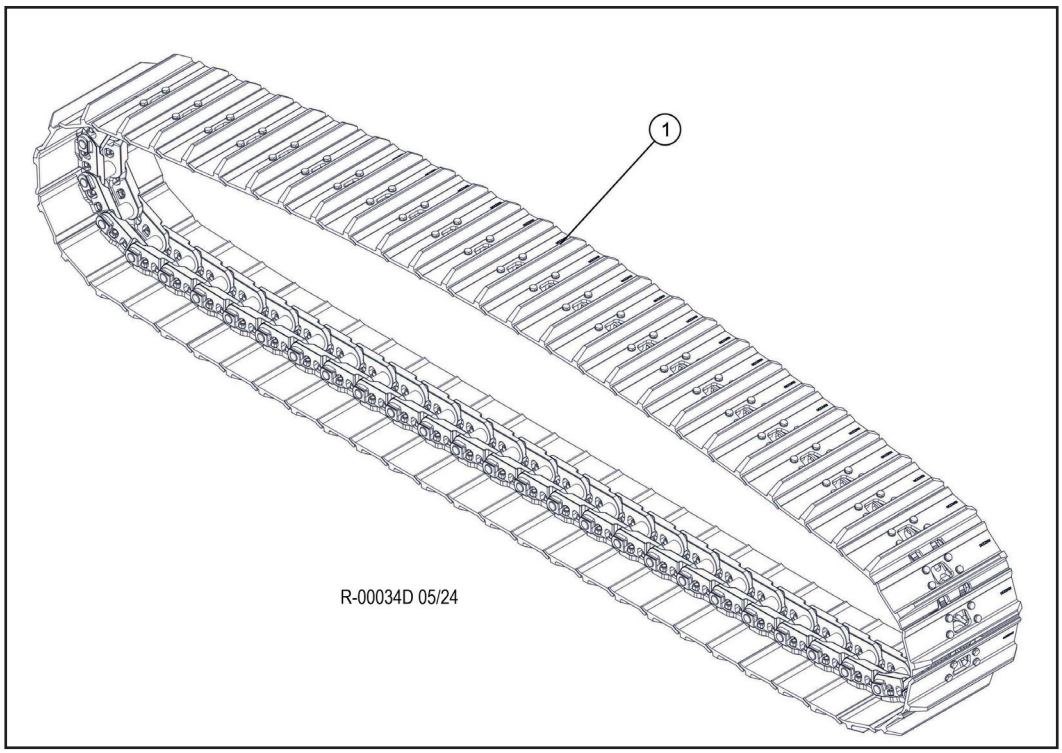


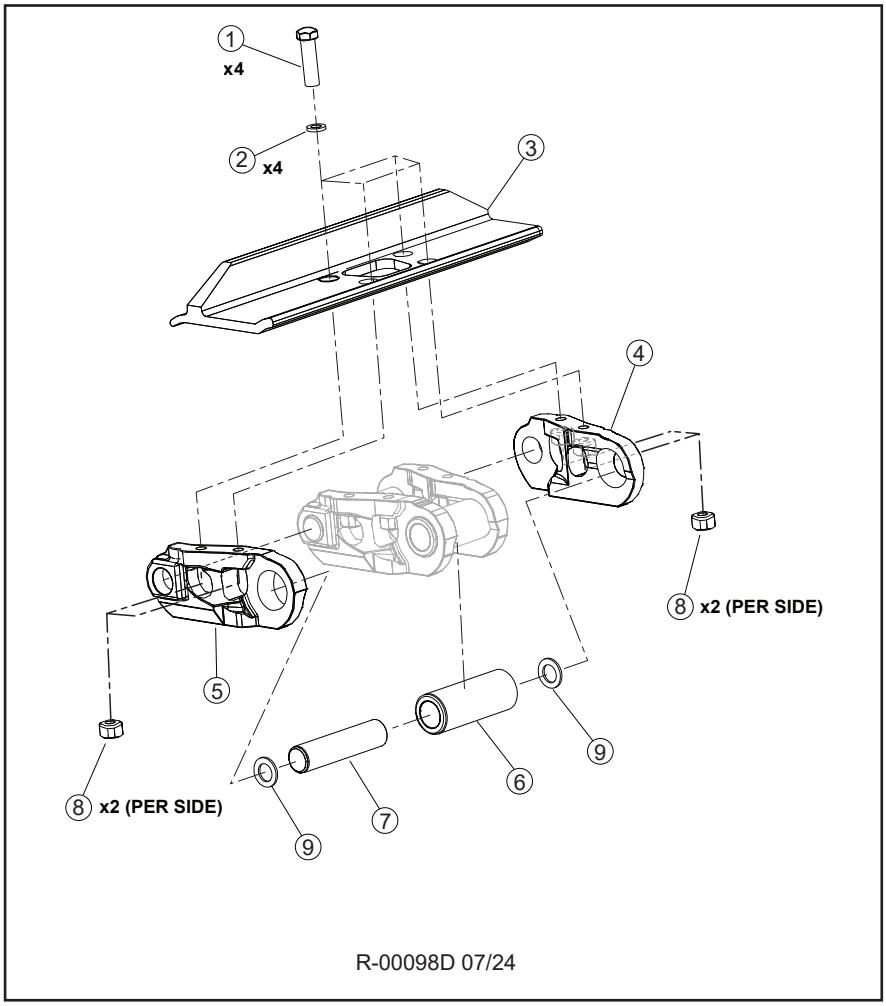

# R100-00320 - TRACK SHOE D7 48 LINK 700MM SG - 745D, 755D

| Item | Part # | Description | Qty. |
|---|---|---|---|
| 1 | 57936 | TRACK, RAIL W/700 SG (48LINK) D-7 BERCO | 2 |

| Item | Part # | Description | Qty. |
|---|---|---|---|
| 1 | 18354 | BOLT, TRACK SHOE | 192 |
| 2 | N/A | WASHERS | 192 |
| 3 | 17861 | TRACK SHOE | - |
| 4 | CR5915 | LINK, TRACK LH (325) | 48 |
| 5 | CR5914 | LINK, TRACK - RH (325) | 48 |
| 6 | 56138 | BUSHING | 47 |
| 7 | 56567 | PIN | 2 |
| 8 | 17864 | NUT, TRACK SHOE | 192 |
| 9 | 56555 | SEAL, LINKS | 94 |
| * | 698540 | PIN, TRACK MASTER - 325 | 1 |

# R100-00330 - TRACK SHOE D7 48 LINK 700MM HD SG - 745D, 755D

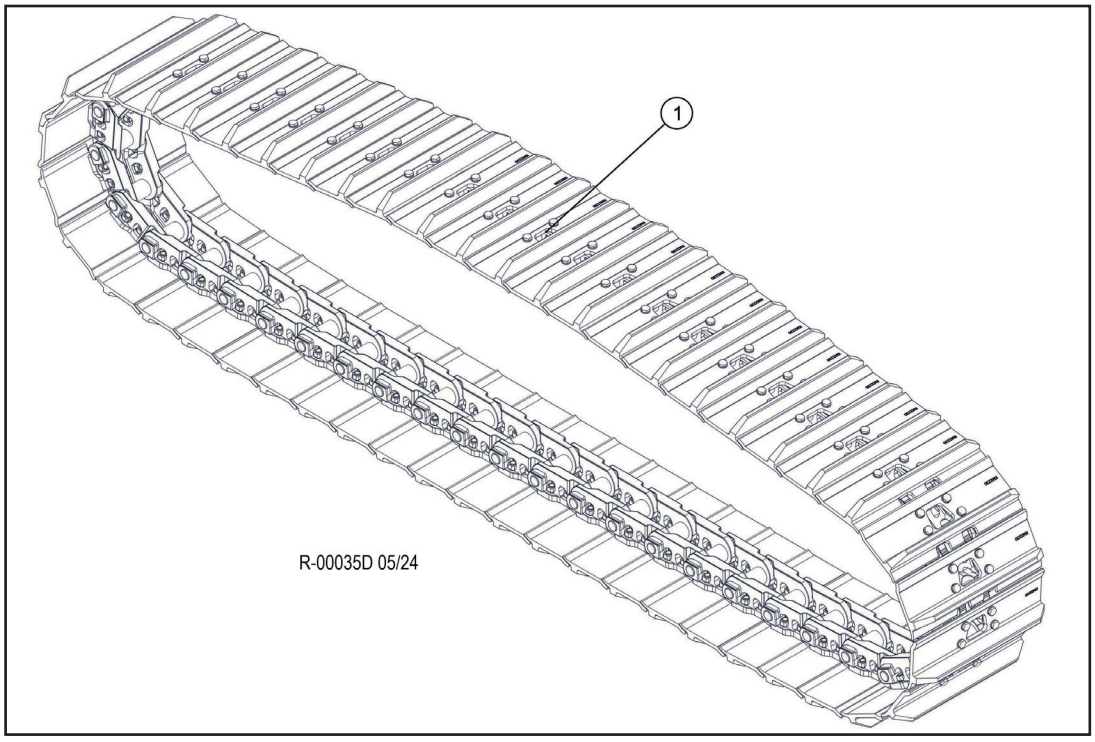


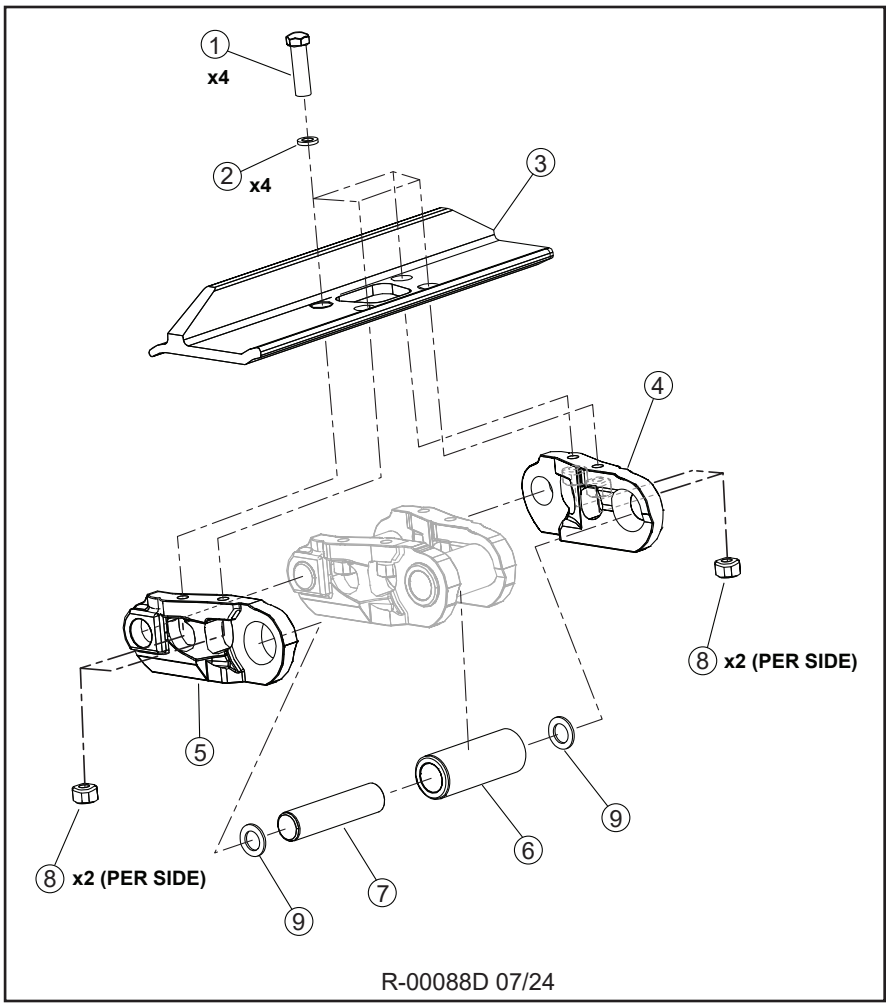

# R100-00330 - TRACK SHOE D7 48 LINK 700MM HD SG - 745D, 755D

| Item | Part # | Description | Qty. |
|---|---|---|---|
| 1 | 57184 | TRACK, RAIL W/700 SG (48 LINK) D7G HD | 2 |

| Item | Part # | Description | Qty. |
|---|---|---|---|
| 1 | SI 878 | BOLT, TRACK SHOE | 180 |
| 2 | N/A | WASHER | 180 |
| 3 | 58357 | SHOE, TRACK - 710 mm D7G | 45 |
| 4 | SI 649A | LINK (RIGHT) | 45 |
| 5 | SI 650a | LINK (LEFT) | 45 |
| 6 | SI 877 | BUSHING | 44 |
| - | 56142 | BUSHING, MASTER LINK | 1 |
| 7 | 56141 | PIN | 44 |
| - | SI 876 | PIN, MASTER LINK | 1 |
| 8 | SI 652 | NUT, TRACK SHOE | 180 |
| 9 | 698560 | SEAL, LINK | 88 |
| - | 58368 | TRACK LINK REPAIR | |

# R100-00340 - TRACK SHOE D7 48 LINK 700MM HD SG - 745D, 755D

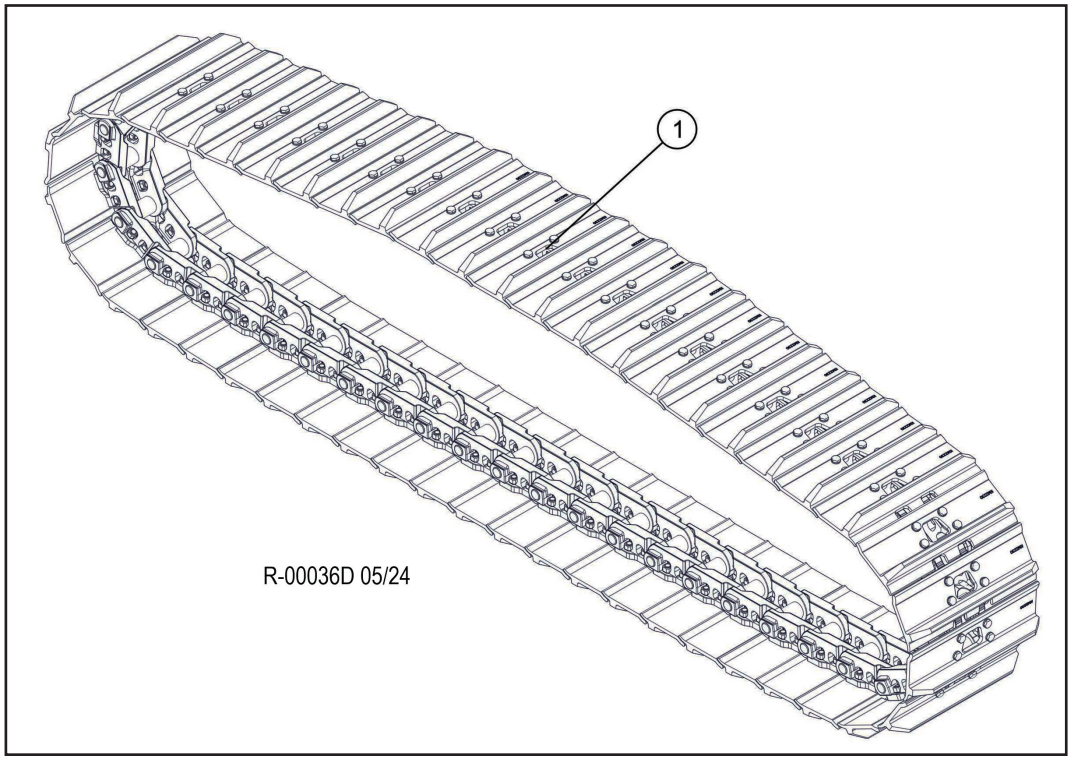


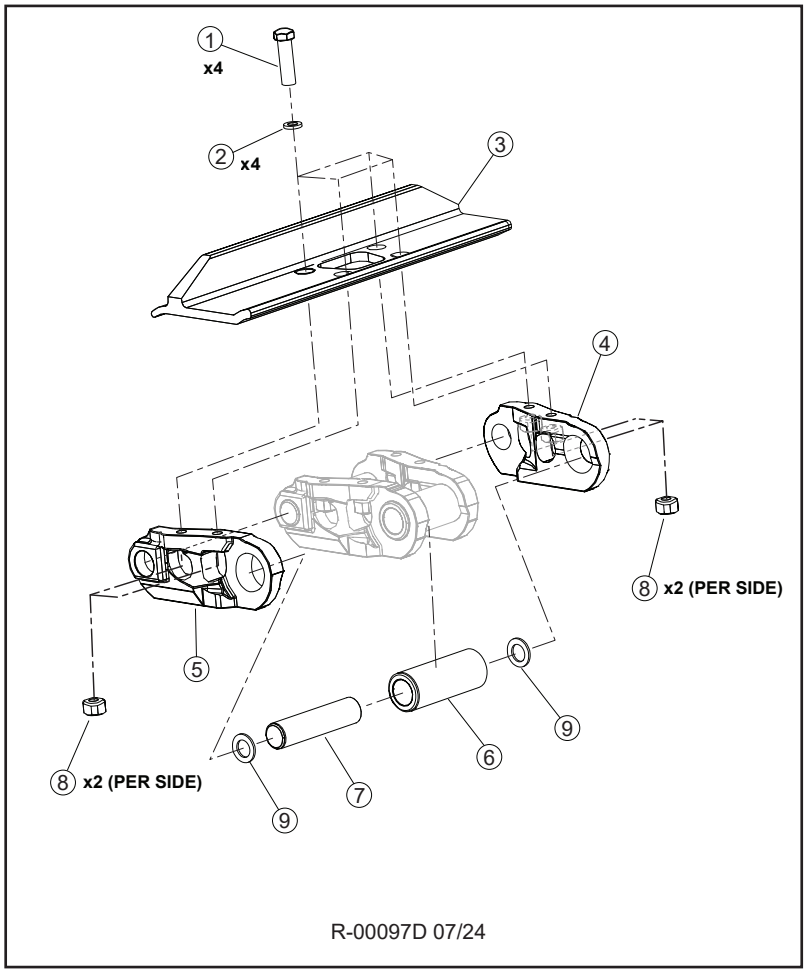

# R100-00340 - TRACK SHOE D7 48 LINK 700MM HD SG - 745D, 755D

| Item | Part # | Description | Qty. |
|---|---|---|---|
| 1 | 58310 | TRACK, RAIL W/700 SG (48LINK) D-7 CAT | 2 |

| Item | Part # | Description | Qty. |
|---|---|---|---|
| 1 | 18354 | BOLT, TRACK SHOE | 180 |
| 2 | N/A | WASHERS | 180 |
| 3 | 21055 | TRACK SHOE 330/700MM SG | 45 |
| 4 | 21450 | LINK, TRACK LH (330) | 45 |
| 5 | 21451 | LINK, TRACK - RH (330) | 45 |
| 6 | 698440 | BUSHING | 44 |
| * | 201-0828 | BUSHING, MASTER LINK | 1 |
| 7 | 21456 | PIN | 44 |
| * | 21457 | PIN, TRACK MASTER - 330 | 1 |
| 8 | 17864 | NUT, TRACK SHOE | 180 |
| 9 | 179-3426 | SEAL, LINKS | 88 |
| * | 179-3428 | SEAL, MASTER LINK | 2 |

# R100-00350 - TRACK SHOE D7 48 LINK 700MM DG - 745D, 755D

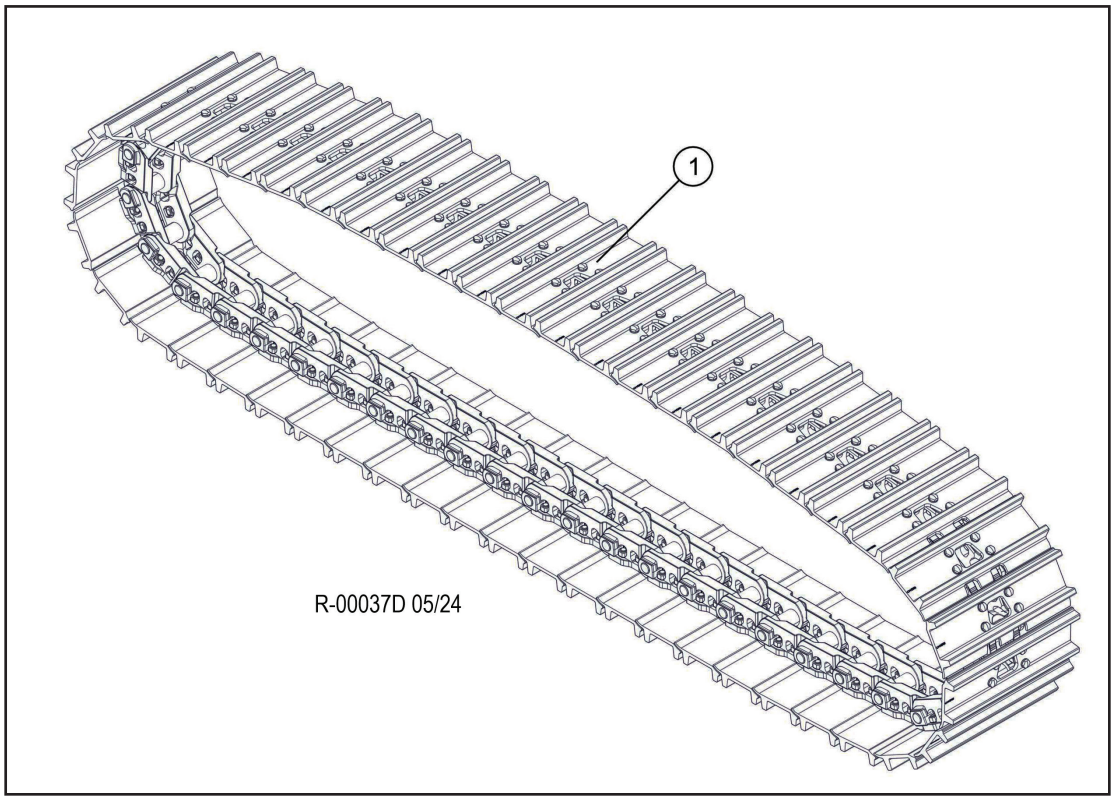


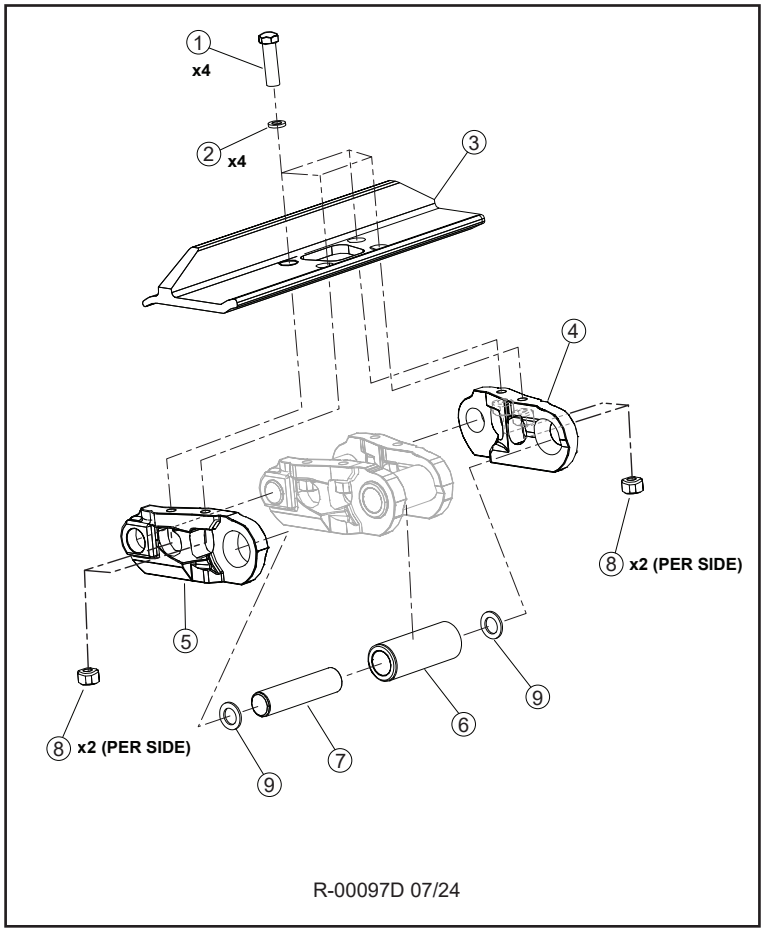

# R100-00350 - TRACK SHOE D7 48 LINK 700MM DG - 745D, 755D

| Item | Part # | Description | Qty. |
|---|---|---|---|
| 1 | 57711 | TRACK, RAIL W/700 DG (48 LINK) D7 BERCO | 2 |

| Item | Part # | Description | Qty. |
|---|---|---|---|
| 1 | 18354 | BOLT, TRACK SHOE | 192 |
| 2 | CALL | WASHERS | 192 |
| 3 | 698530 | TRACK SHOE | - |
| 4 | CR5915 | LINK, TRACK LH (325) | 48 |
| 5 | CR5914 | LINK, TRACK - RH (325) | 48 |
| 6 | 56138 | BUSHING | 47 |
| 7 | 56567 | PIN | 2 |
| 8 | 17864 | NUT, TRACK SHOE | 192 |
| 9 | 56555 | SEAL, LINKS | 94 |
| * | 698540 | PIN, TRACK MASTER - 325 | 1 |

# R100-00360 - TRACK SHOE D7 48 LINK 700MM HD DG - 745D, 755D

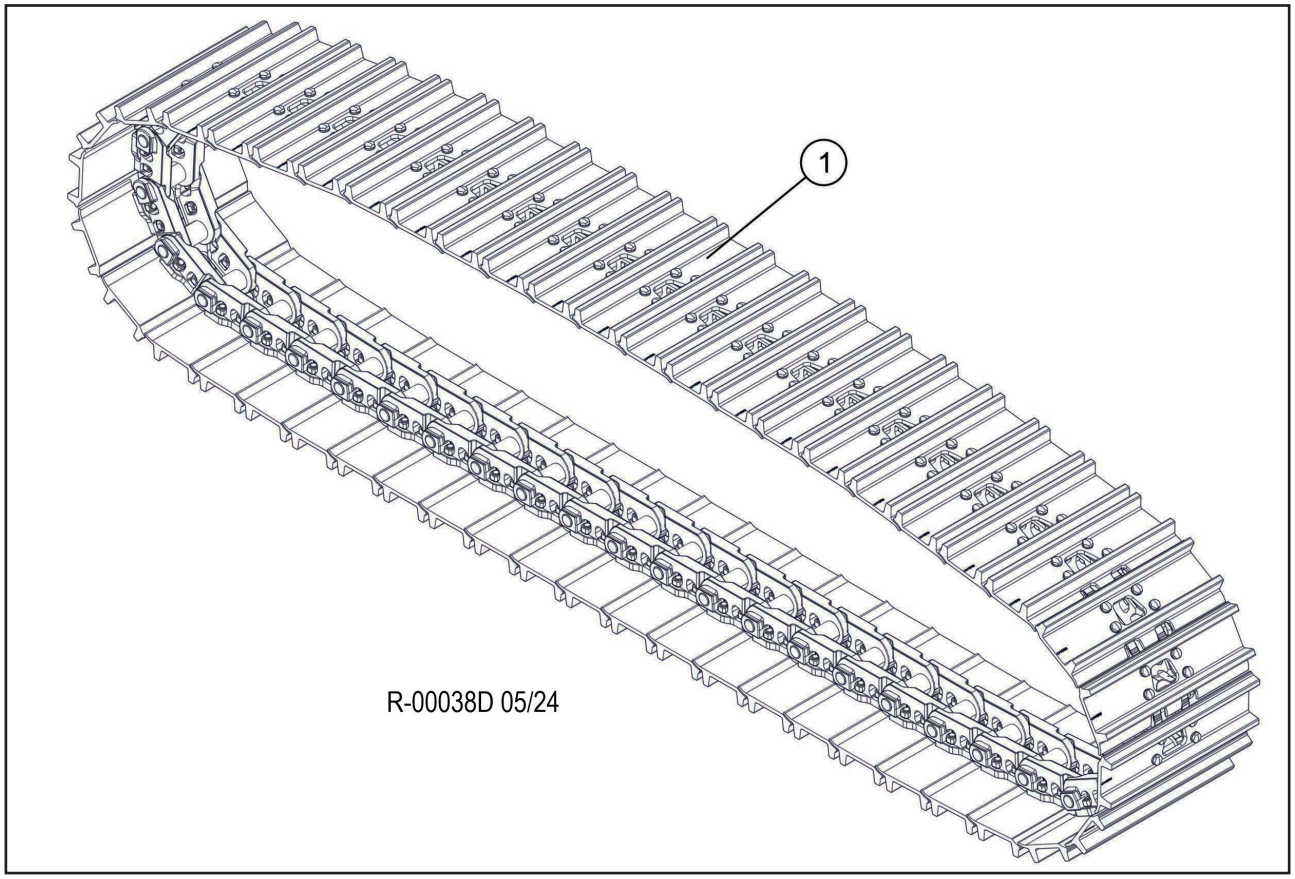


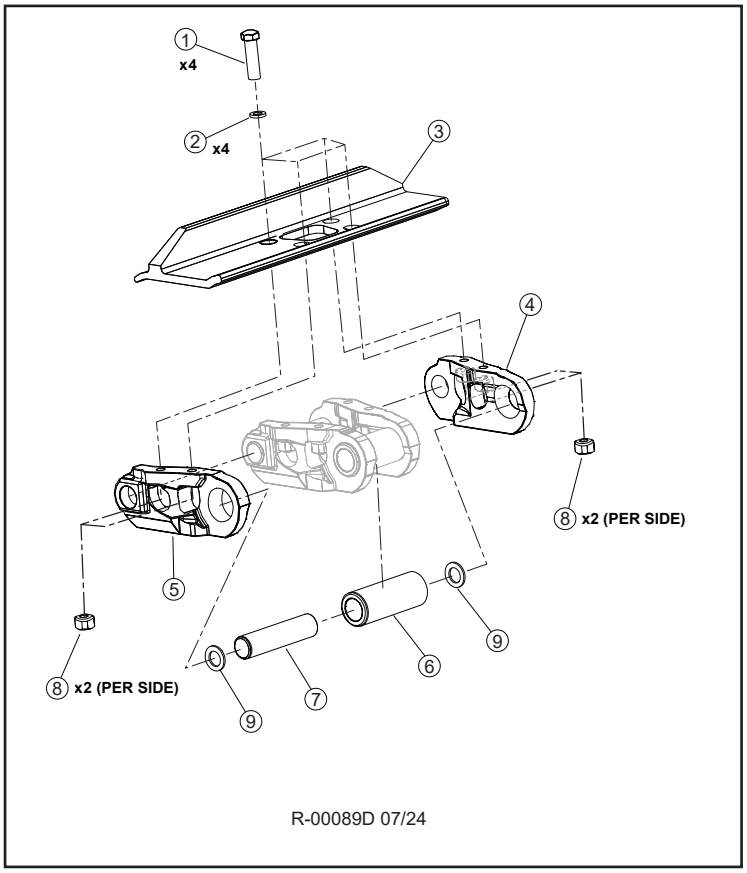

# R100-00360 - TRACK SHOE D7 48 LINK 700MM HD DG - 745D, 755D

| Item | Part # | Description | Qty. |
|---|---|---|---|
| 1 | 57752 | TRACK, RAIL W/700 DG - D7G (48 LINK) HD | 2 |

| Item | Part # | Description | Qty. |
|---|---|---|---|
| 1 | SI 878 | BOLT, TRACK SHOE | 180 |
| 2 | N/A | WASHER | 180 |
| 3 | 698570 | SHOE, TRACK - 700 MM | 45 |
| 4 | SI 649A | LINK (RIGHT) | 45 |
| 5 | SI 650A | LINK (LEFT) | 45 |
| 6 | SI 877 | BUSHING | 44 |
| - | 56142 | BUSHING, MASTER LINK | 1 |
| 7 | 56141 | PIN | 44 |
| - | SI 876 | PIN, MASTER LINK | 1 |
| 8 | SI 652 | NUT, TRACK SHOE | 180 |
| 9 | 698560 | SEAL, LINK | 88 |

# R100-00370 - TRACK SHOE D7 48 LINK 850MM TG - 745D, 755D

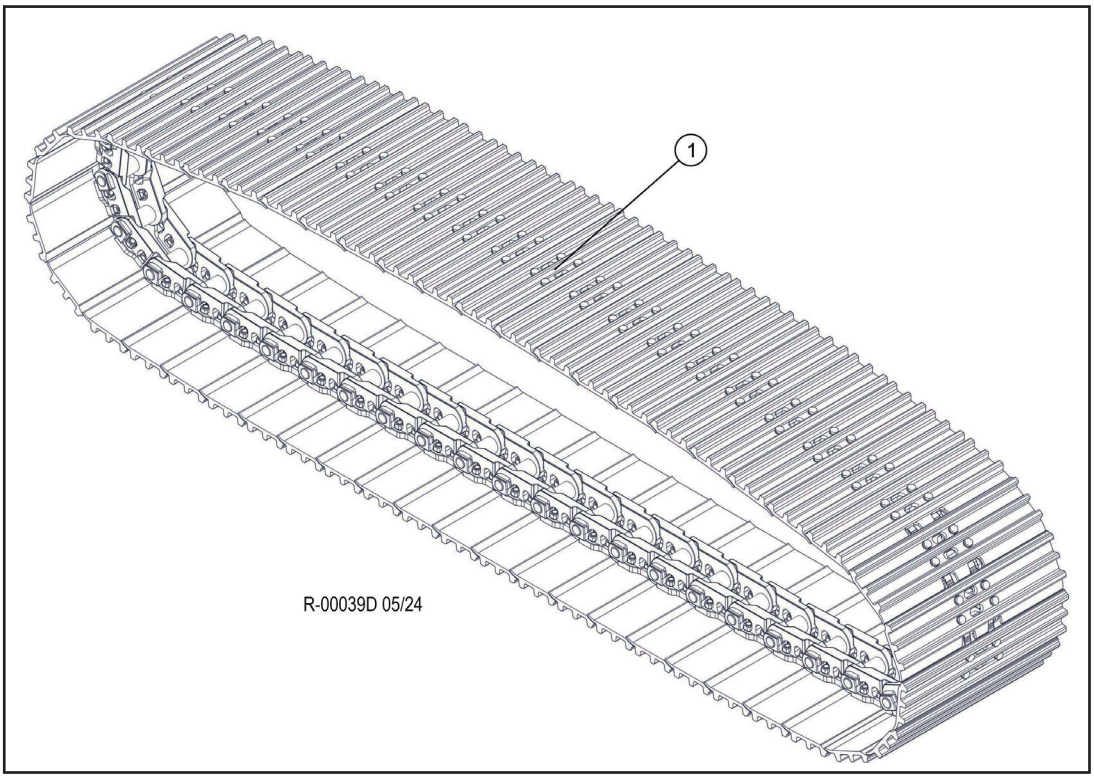


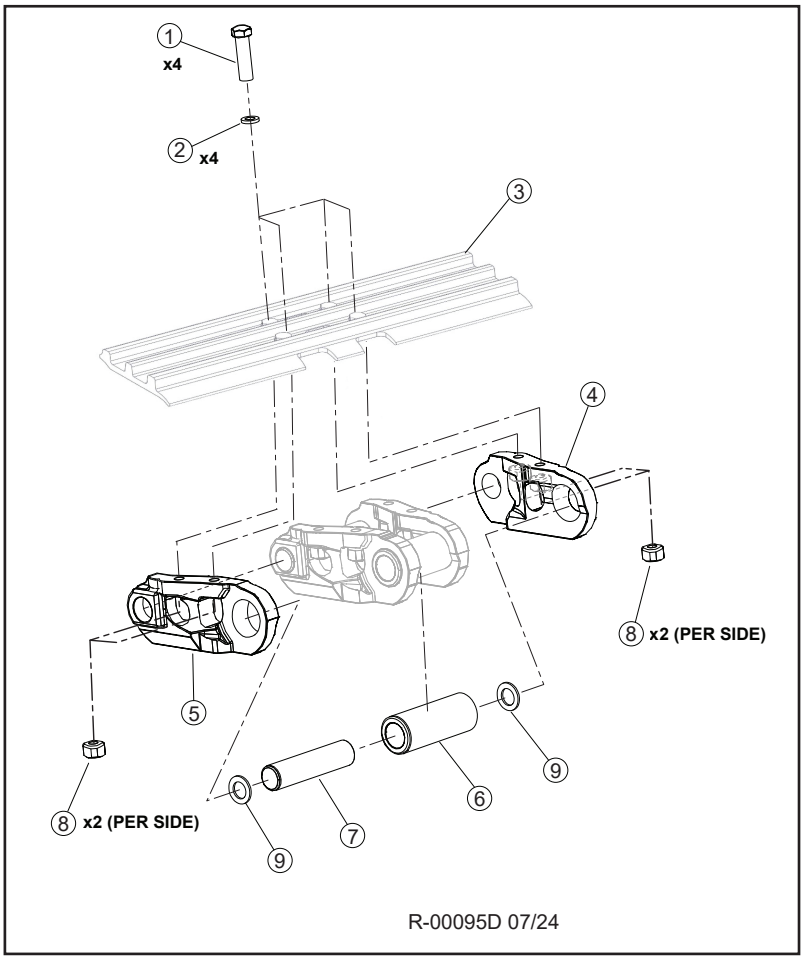

# R100-00370 - TRACK SHOE D7 48 LINK 850MM TG - 745D, 755D

| Item | Part # | Description | Qty. |
|---|---|---|---|
| 1 | 55348 | TRACK, RAIL W/850 TG (48 LINK) D7- BERCO | 2 |

| Item | Part # | Description | Qty. |
|---|---|---|---|
| 1 | 18354 | BOLT, TRACK SHOE | 180 |
| 2 | N/A | WASHERS | 180 |
| 3 | CR5957 | TRACK SHOE | 45 |
| 4 | CR5915 | LINK, TRACK LH | 45 |
| 5 | CR5914 | LINK, TRACK - RH | 45 |
| 6 | 698510 | BUSHING | 44 |
| * | 698490 | BUSHING, MASTER LINK | 1 |
| 7 | 698480 | PIN | 44 |
| * | 698500 | PIN, TRACK MASTER | 1 |
| 8 | 17864 | NUT, TRACK SHOE | 180 |
| 9 | 56555 | SEAL, LINK | 88 |

# R100-00380 - TRACK SHOE D7 48 LINK 850MM HD TG - 745D, 755D

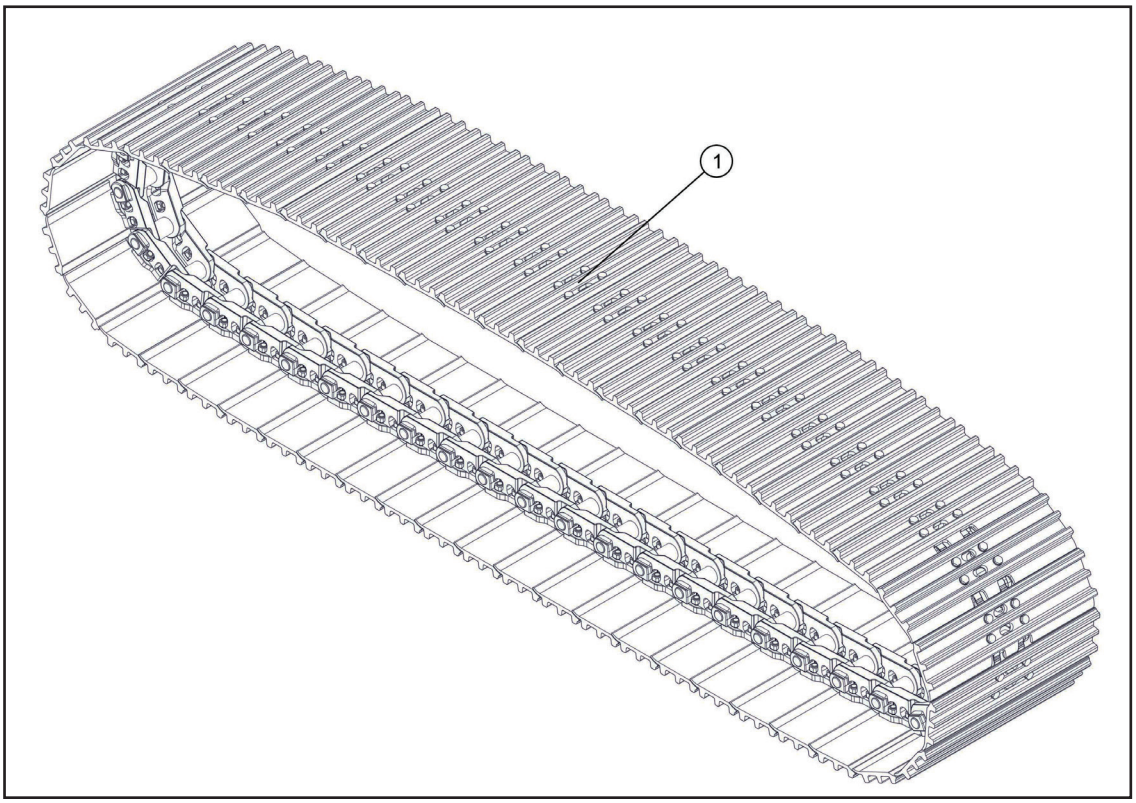


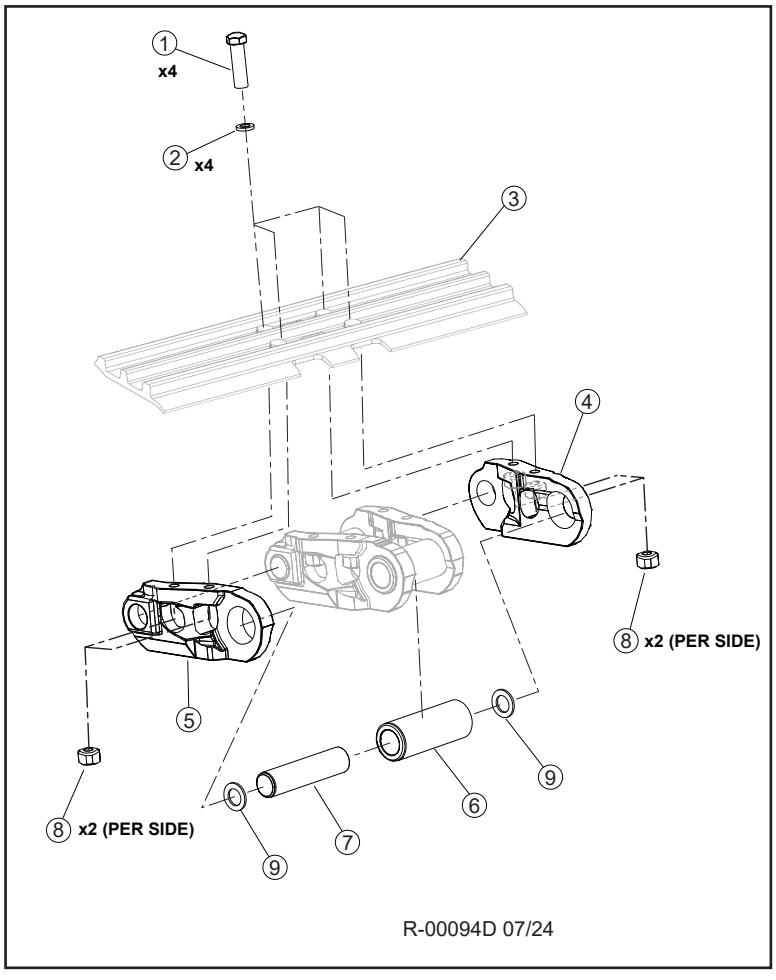

# R100-00380 - TRACK SHOE D7 48 LINK 850MM HD TG - 745D, 755D

| Item | Part # | Description | Qty. |
|---|---|---|---|
| 1 | 55632 | TRACK, RAIL W/850 TG (48 LINK) D7G HD | 2 |

| Item | Part # | Description | Qty. |
|---|---|---|---|
| 1 | SI 651 | BOLT, TRACK SHOE | 188 |
| 2 | N/A | WASHERS | 188 |
| 3 | 56144 | TRACK SHOE | 47 |
| 4 | SI 650A | LINK, TRACK LH | 47 |
| 5 | SI 649A | LINK, TRACK - RH | 44 |
| 6 | SI 877 | BUSHING | 46 |
| * | 56142 | BUSHING, MASTER LINK | 1 |
| 7 | 56141 | PIN | 44 |
| * | 698590 | PIN, TRACK MASTER | 1 |
| 8 | SI 652 | NUT, TRACK SHOE | 188 |
| 9 | 698560 | SEAL, LINKS | 96 |

# R100-00390 - TRACK SHOE D7 48 LINK 900MM TG - TN745D, TN755D

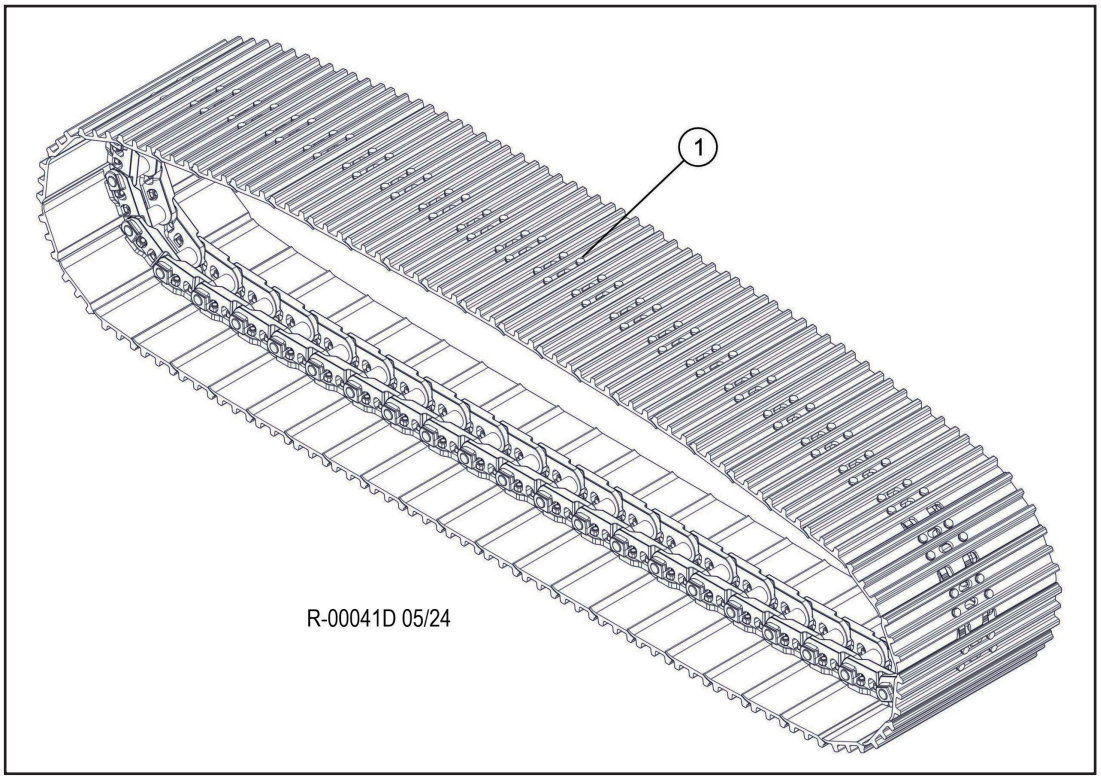


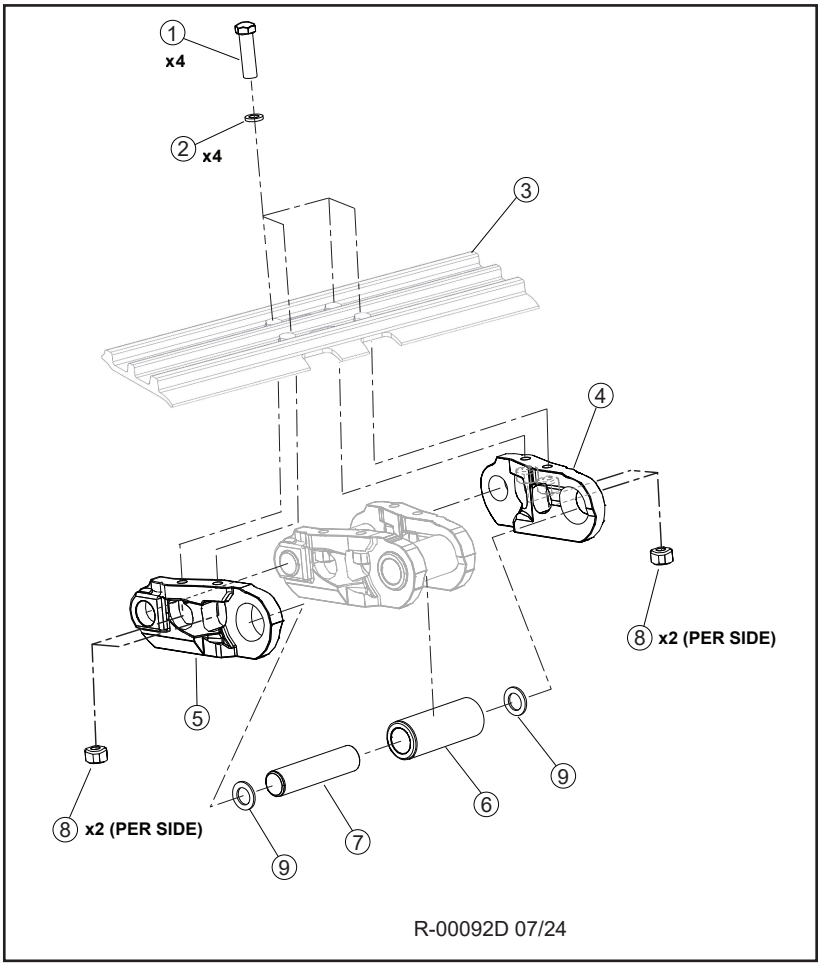

# R100-00390 - TRACK SHOE D7 48 LINK 900MM TG - TN745D, TN755D

| Item | Part # | Description | Qty. |
|---|---|---|---|
| 1 | 53301 | TRACK, RAIL W/900 TG (48 LINK) D7G HD | 2 |

| Item | Part # | Description | Qty. |
|---|---|---|---|
| 1 | SI 651 | BOLT, TRACK SHOE | 188 |
| 2 | N/A | WASHERS | 188 |
| 3 | 56144 | TRACK SHOE | 47 |
| 4 | SI 650A | LINK, TRACK LH | 47 |
| 5 | SI 649A | LINK, TRACK - RH | 44 |
| 6 | SI 877 | BUSHING | 46 |
| * | 56142 | BUSHING, MASTER LINK | 1 |
| 7 | 56141 | PIN | 44 |
| * | 698590 | PIN, TRACK MASTER | 1 |
| 8 | SI 652 | NUT, TRACK SHOE | 188 |
| 9 | 698560 | SEAL, LINKS | 96 |

# R100-00400 - TRACK SHOE D7G 48 LINK TRILINK 900MM TG - TN745D, TN755

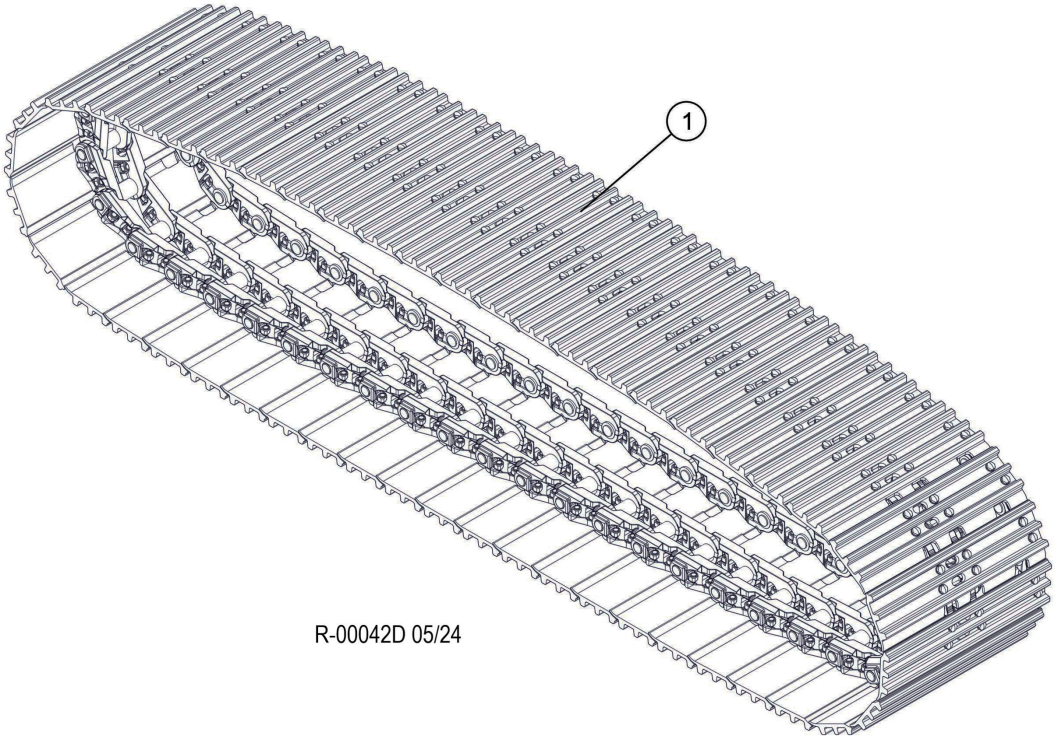


R-00042D 05/24

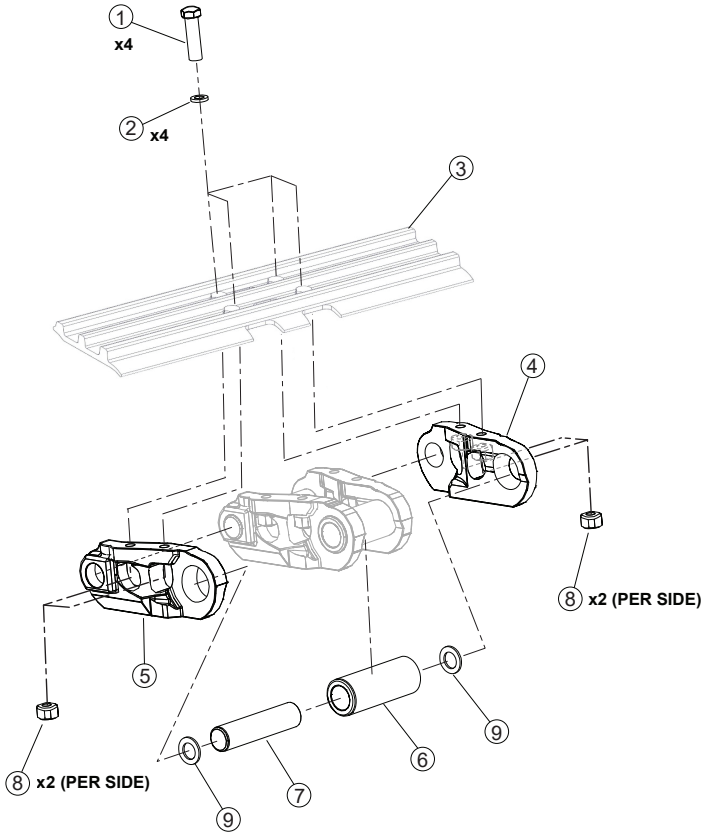


R-00093D 07/24

# R100-00400 - TRACK SHOE D7G 48 LINK TRILINK 900MM TG - TN745D, TN755

| Item | Part # | Description | Qty. |
|---|---|---|---|
| 1 | 53320 | TRACK, RAIL W/900 TG TRI TRACK HD - 48 L | 2 |

| Item | Part # | Description | Qty. |
|---|---|---|---|
| 1 | SI 1878 | BOLT, TRACK SHOE (Torque to 300 ft lbs (400 Nm) | 282 |
| 2 | N/A | WASHER | 282 |
| 3 | 698630 | SHOE - 900MM TRIPLE | 46 |
| 4 | SI 649A | LINK (right) | 46 |
| 5 | SI 650A | LINK (left) | 4 |
| 6 | SI 877 | BUSHING | 46 |
| - | 56142 | BUSHING, MASTER LINK | 1 |
| 7 | 56141 | PIN | 42 |
| - | 698590 | PIN, MASTER LINK | 1 |
| 8 | SI 652 | NUT, TRACK SHOE | 282 |
| 9 | 698560 | SEAL, LINK | 88 |
| | | | 1 |

# R100-00410 - CENTER FRAME U. (3M)

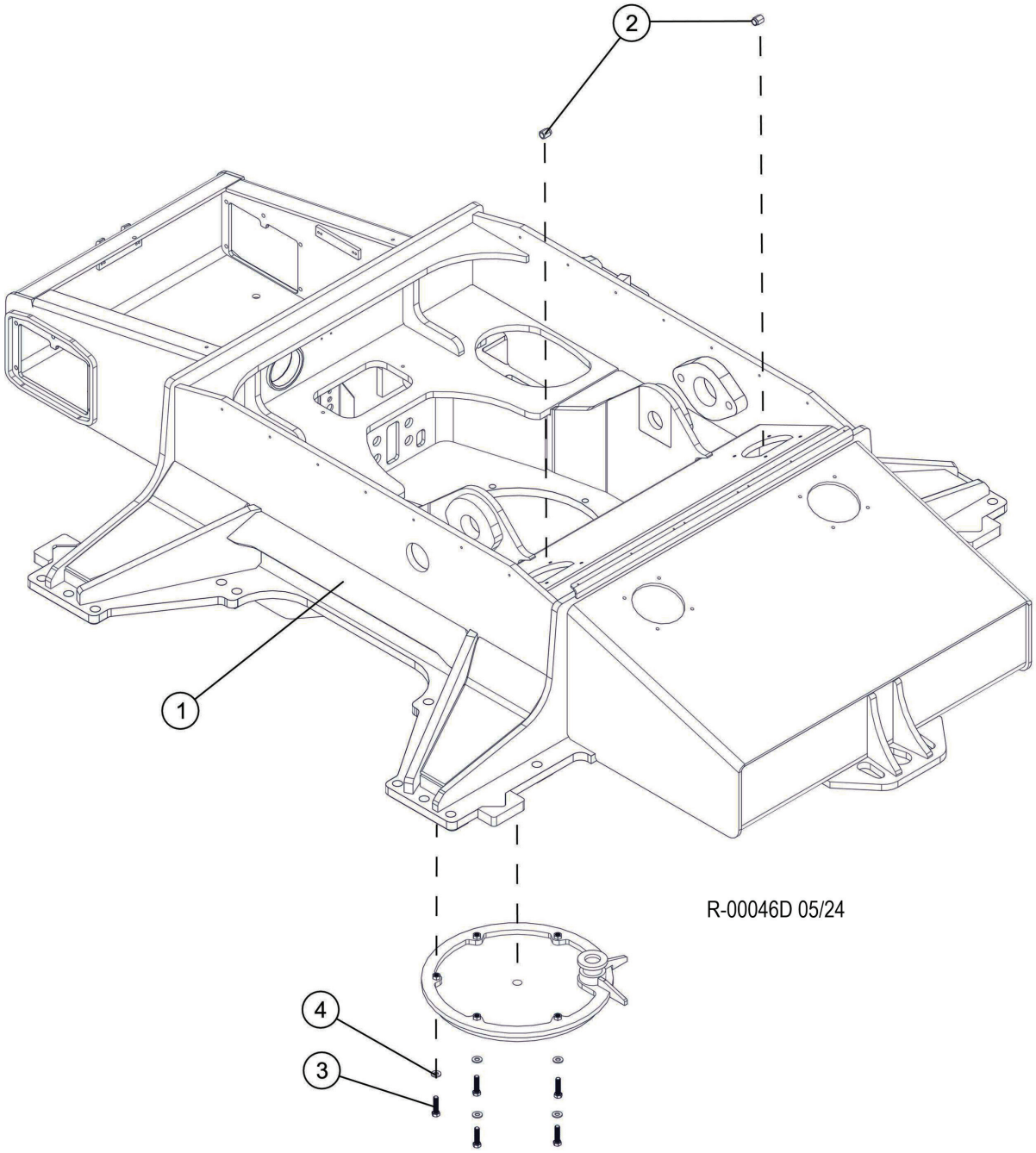


| Item | Part # | Description | Qty. |
|---|---|---|---|
| 1 | 65065 | CARBODY, TRACK MACHINE D7-LEV 3M/W N-BL | 1 |
| 2 | 53885 | VALVE, CHECK - FUEL TANK | 2 |
| 3 | 15517 | BOLT - .625” X 2.5” | 5 |
| 4 | 10805 | WASHER, FLAT - .625” | 5 |

# R100-00420 - 3M, LVL TRUNK LID

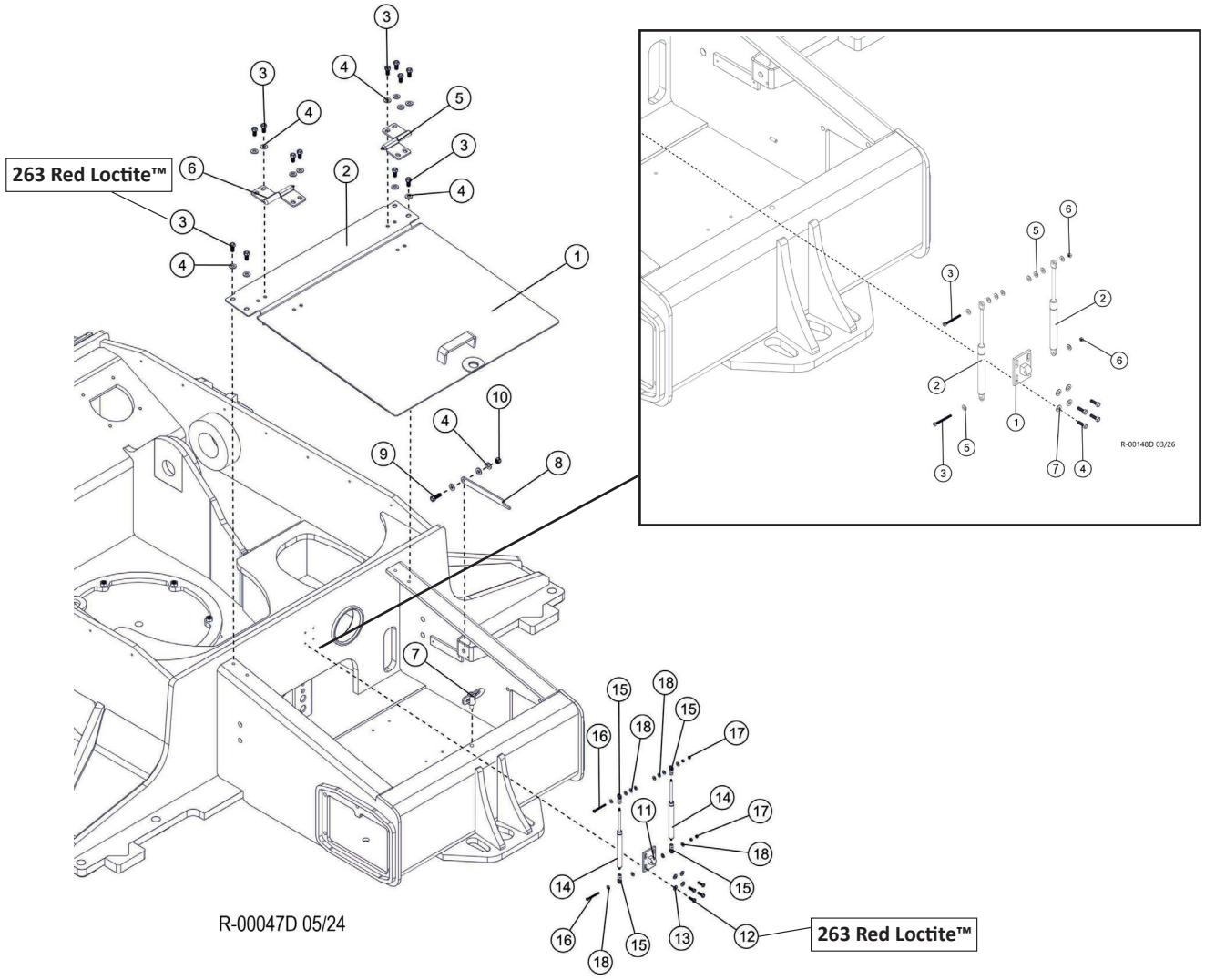


| Item | Part # | Description | Qty. |
|---|---|---|---|
| 1 | 53613 | TRUNK, LID LEVELING T/M 3M WIDE W/BLADE | 1 |
| 2 | 59117 | WELD, TRUNK LID MOUNT, 3M LVL | 1 |
| 3 | 10783 | BOLT - .5" X 1" **263 RED LOCTITE™** | 12 |
| 4 | 10804 | WASHER, FLAT - .5" | 15 |
| 5 | 65530 | HINGE ASSY, 2 BOLT, LH | 1 |
| 6 | 65531 | HINGE ASSY, 2 BOLT, RH | 1 |
| 7 | 19771 | LATCH, CAM - SHORT (PUMP GUARD) | 1 |
| 8 | 54060 | ROD, PROP - LEVELING TRUNK-CURRENT | 1 |
| 9 | 10739 | BOLT - .5" X 1.5" | 1 |
| 10 | 10815 | NUT, LOCK - .5" | 1 |
| 11 | 54059 | BRACKET, TRUNK GAS SPRING **S/N: UP TO 1261** | 1 |
| 12 | 15589 | BOLT - .3125" X 1" **263 RED LOCTITE™** | 4 |
| 13 | 10801 | WASHER, FLAT - .3125" | 4 |
| 14 | 57963 | CYLINDER, GAS SHOCK **S/N: UP TO 1261** | 2 |
| 15 | 54108 | STUD, ROD END - GAS SPRING TRACK TRUCK **S/N: UP TO 1261** | 4 |
| 16 | 58198 | BOLT, M6 -1.00 x 60MM TRUNK SHOCK **S/N: UP TO 1261** | 2 |
| 17 | 16117 | NUT, HEX - 6MM **S/N: UP TO 1261** | 4 |
| 18 | 10757 | WASHER, SAE FLAT - .25" **S/N: UP TO 1261** | 12 |
| | | **S/N: 1261 & FORWARD** | |
| 1 | 540590 | BRACKET, TRUNK GAS SPRING | 1 |
| 2 | 695830 | SHOCK, GAS, 325MM X 800N | 2 |
| 3 | 10824 | BOLT - .3125" X 2.5" | 2 |
| 4 | 15589 | BOLT - .3125" X 1" | 4 |
| 5 | 15559 | WASHER, SAE FLAT - .3125" | 10 |
| 6 | 10812 | NUT, LOCK - .3125" | 4 |
| 7 | 10801 | WASHER, FLAT - .3125" | 4 |

# R100-00430 - 10’4 LEVELING CARBODY

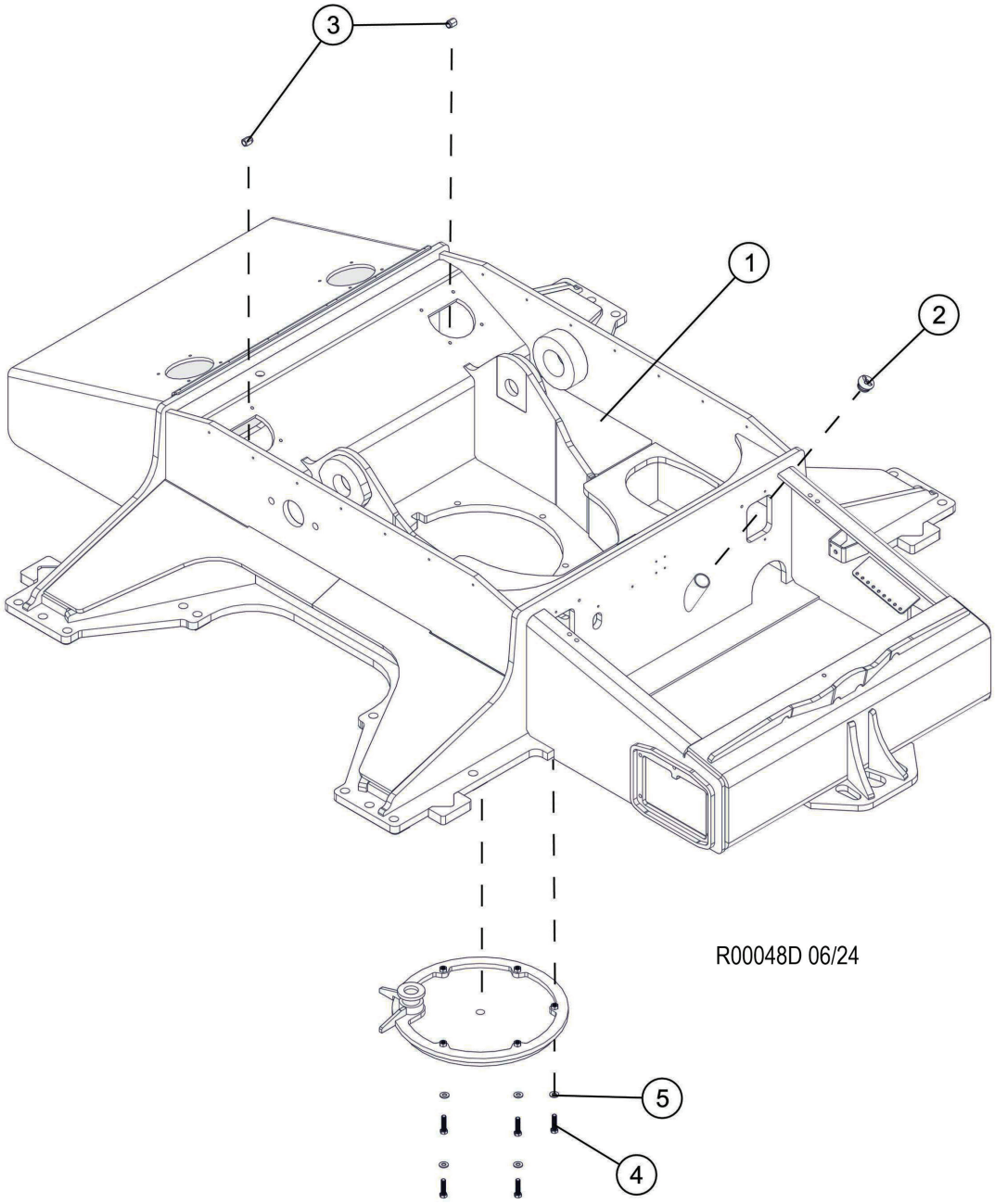


| Item | Part # | Description | Qty. |
|---|---|---|---|
| 1 | 60005 | CARBODY, TRACK - LEVELING 10’-4” HD LEV | 1 |
| 2 | 53728 | CAP, EXPANDABLE - AUX OIL TANK (TRACK) | 1 |
| 3 | 53885 | VALVE, CHECK - FUEL TANK | 2 |
| 4 | 15517 | BOLT - .625” X 2.5” | 5 |
| 5 | 10805 | WASHER, FLAT - .625” | 5 |

# R100-00440 - 10’6 & 11’0 LVL TRUCK LID

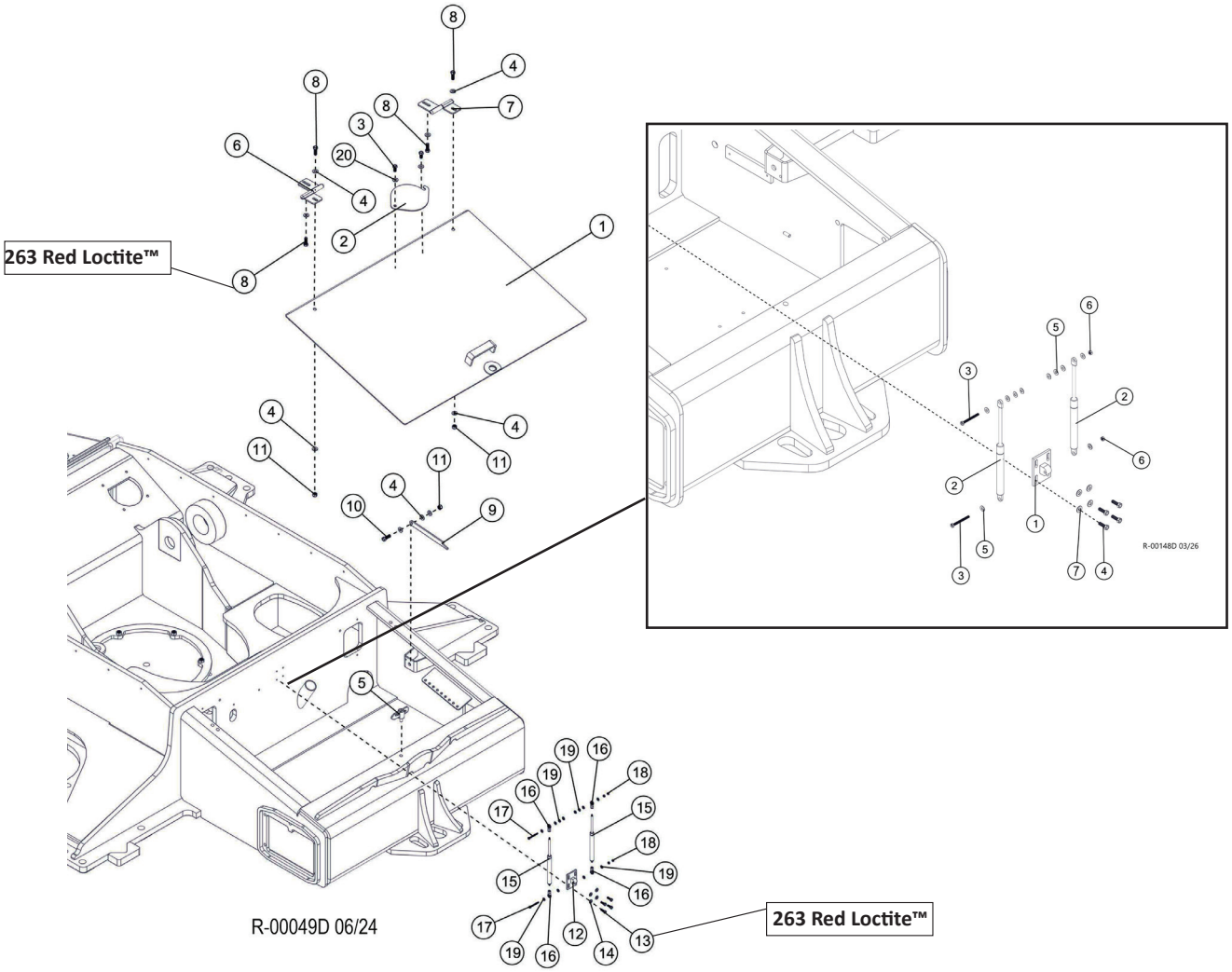


| Item | Part # | Description | Qty. |
|---|---|---|---|
| 1 | 54057 | LID, TRUNK LEVELING T/M BRACED | 1 |
| 2 | 12150 | COVER, ACCESS - RAD FILL / STEER CYL | 1 |
| 3 | 10783 | BOLT - .5” X 1” | 2 |
| 4 | 10804 | WASHER, FLAT - .5” | 9 |
| 5 | 19771 | LATCH, CAM - SHORT (PUMP GUARD) | 1 |
| 6 | 59118 | HINGE ASSY, 1 BOLT, lH | 1 |
| 7 | 59119 | HINGE ASSY, 1 BOLT, RH | 1 |
| 8 | 50100 | BOLT - .5” X 1.25” **263 RED LOCTITE™** | 4 |
| 9 | 54060 | ROD, PROP - LEVELING TRUNK-CURRENT | 1 |
| 10 | 10739 | BOLT - .5” X 1.5” | 1 |
| 11 | 10815 | NUT, LOCK - .5” | 3 |
| 12 | 54059 | BRACKET, TRUNK GAS SPRING **S/N: UP TO 1261** | 1 |
| 13 | 15589 | BOLT - .3125” X 1” **263 RED LOCTITE™** | 4 |
| 14 | 10801 | WASHER, FLAT - .3125” | 4 |
| 15 | 57963 | CYLINDER, GAS SHOCK **S/N: UP TO 1261** | 2 |
| 16 | 54108 | STUD, ROD END - GAS SPRING TRACK TRUCK **S/N: UP TO 1261** | 4 |
| 17 | 58198 | BOLT, M6 -1.00 x 60MM TRUNK SHOCK **S/N: UP TO 1261** | 2 |
| 18 | 16117 | NUT, HEX - 6MM **S/N: UP TO 1261** | 4 |
| 19 | 10757 | WASHER, SAE FLAT - .25” **S/N: UP TO 1261** | 12 |
| 20 | 15534 | WASHER, SAE FLAT - .5” | 2 |
| | | **S/N: 1261 & FORWARD** | |
| 1 | 540590 | BRACKET, TRUNK GAS SPRING | 1 |
| 2 | 695830 | SHOCK, GAS, 325MM X 800N | 2 |
| 3 | 10824 | BOLT - .3125" X 2.5" | 2 |
| 4 | 15589 | BOLT - .3125" X 1" | 4 |
| 5 | 15559 | WASHER, SAE FLAT - .3125" | 10 |
| 6 | 10812 | NUT, LOCK - .3125" | 4 |
| 7 | 10801 | WASHER, FLAT - .3125” | 4 |

# R100-00450 - 11’0 LEVELING CARBODY

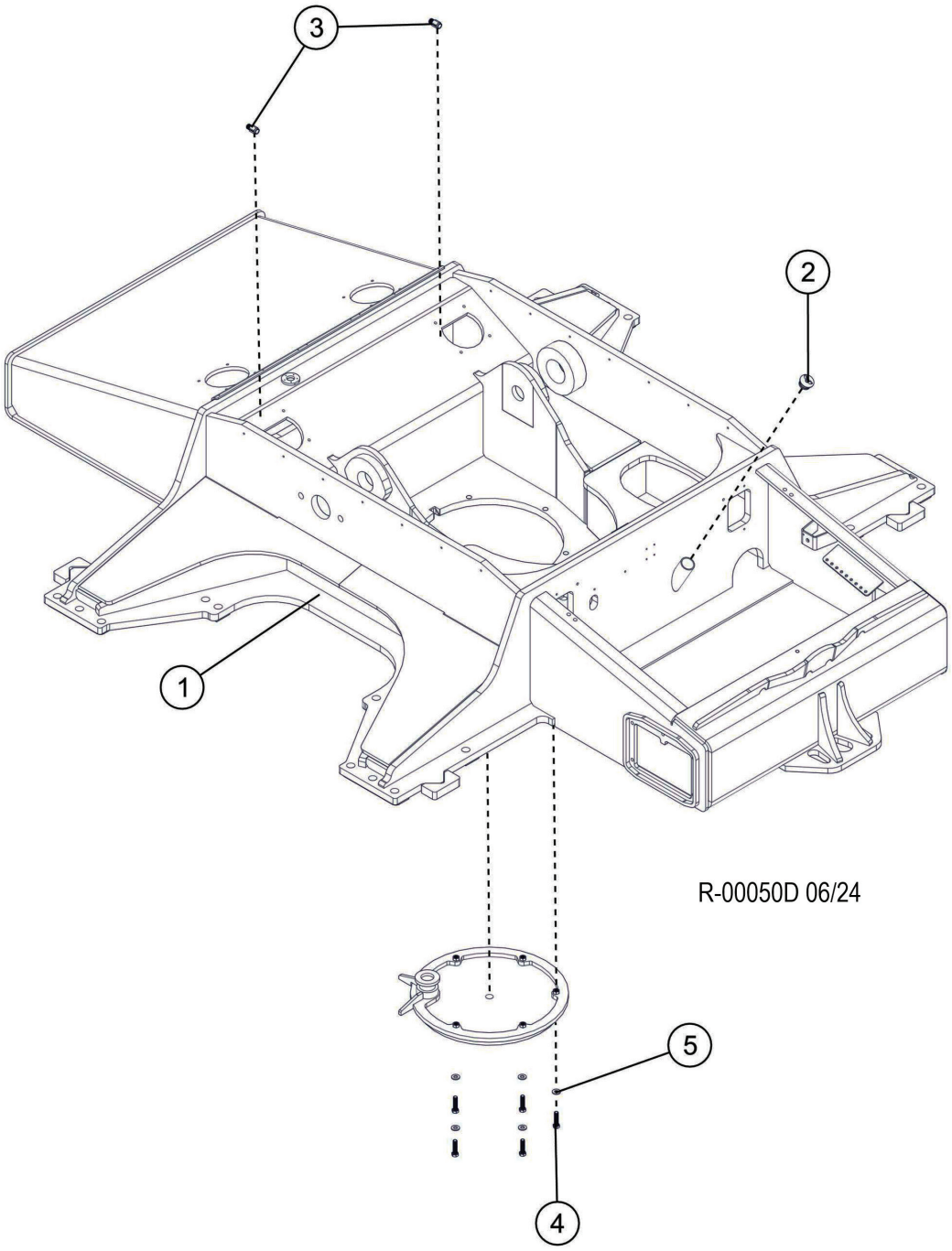


| Item | Part # | Description | Qty. |
|---|---|---|---|
| 1 | 60045 | WELDMENT, CARBODY LEVELING 11’-0” HD | 1 |
| 2 | 53728 | CAP, EXPANDABLE - AUX OIL TANK (TRACK) | 1 |
| 3 | 53885 | VALVE, CHECK - FUEL TANK | 2 |
| 4 | 15517 | BOLT - .625” X 2.5” | 5 |
| 5 | 10805 | WASHER, FLAT - .625” | 5 |

# R100-00460 - 10’6 & 11’0 LVL TRUCK LID

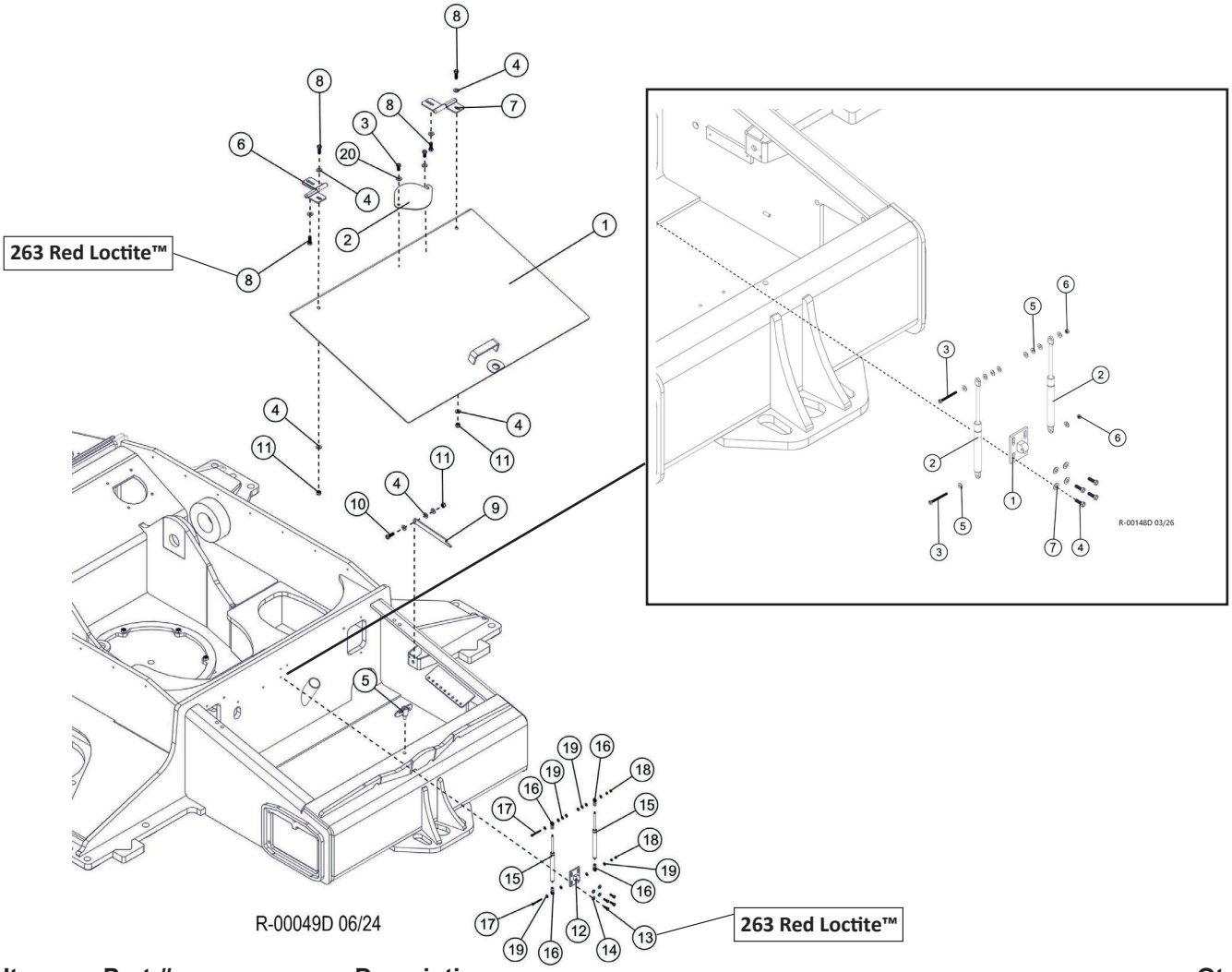


| Item | Part # | Description | Qty. |
|---|---|---|---|
| 1 | 54057 | LID, TRUNK LEVELING T/M BRACED | 1 |
| 2 | 12150 | COVER, ACCESS - RAD FILL / STEER CYL | 1 |
| 3 | 10783 | BOLT - .5” X 1” | 2 |
| 4 | 10804 | WASHER, FLAT - .5” | 9 |
| 5 | 19771 | LATCH, CAM - SHORT (PUMP GUARD) | 1 |
| 6 | 59118 | HINGE ASSY, 1 BOLT, IH | 1 |
| 7 | 59119 | HINGE ASSY, 1 BOLT, RH | 1 |
| 8 | 50100 | BOLT - .5” X 1.25” 263 RED LOCTITE™ | 4 |
| 9 | 54060 | ROD, PROP - LEVELING TRUNK-CURRENT | 1 |
| 10 | 10739 | BOLT - .5” X 1.5” | 1 |
| 11 | 10815 | NUT, LOCK - .5” | 3 |
| 12 | 54059 | BRACKET, TRUNK GAS SPRING **S/N: UP TO 1261** | 1 |
| 13 | 15589 | BOLT - .3125” X 1” 263 RED LOCTITE™ | 4 |
| 14 | 10801 | WASHER, FLAT - .3125” | 4 |
| 15 | 57963 | CYLINDER, GAS SHOCK **S/N: UP TO 1261** | 2 |
| 16 | 54108 | STUD, ROD END - GAS SPRING TRACK TRUCK **S/N: UP TO 1261** | 4 |
| 17 | 58198 | BOLT, M6 -1.00 x 60MM TRUNK SHOCK **S/N: UP TO 1261** | 2 |
| 18 | 16117 | NUT, HEX - 6MM S/N: UP TO 1261 | 4 |
| 19 | 10757 | WASHER, SAE FLAT - .25” **S/N: UP TO 1261** | 12 |
| 20 | 15534 | WASHER, SAE FLAT - .5” | 2 |
| | | **S/N: 1261 & FORWARD** | |
| 1 | 540590 | BRACKET, TRUNK GAS SPRING | 1 |
| 2 | 695830 | SHOCK, GAS, 325MM X 800N | 2 |
| 3 | 10824 | BOLT - .3125" X 2.5" | 2 |
| 4 | 15589 | BOLT - .3125" X 1" | 4 |
| 5 | 15559 | WASHER, SAE FLAT - .3125" | 10 |
| 6 | 10812 | NUT, LOCK - .3125" | 4 |
| 7 | 10801 | WASHER, FLAT - .3125” | 4 |

# R100-00470 - 11’0 LEVELING CARBODY

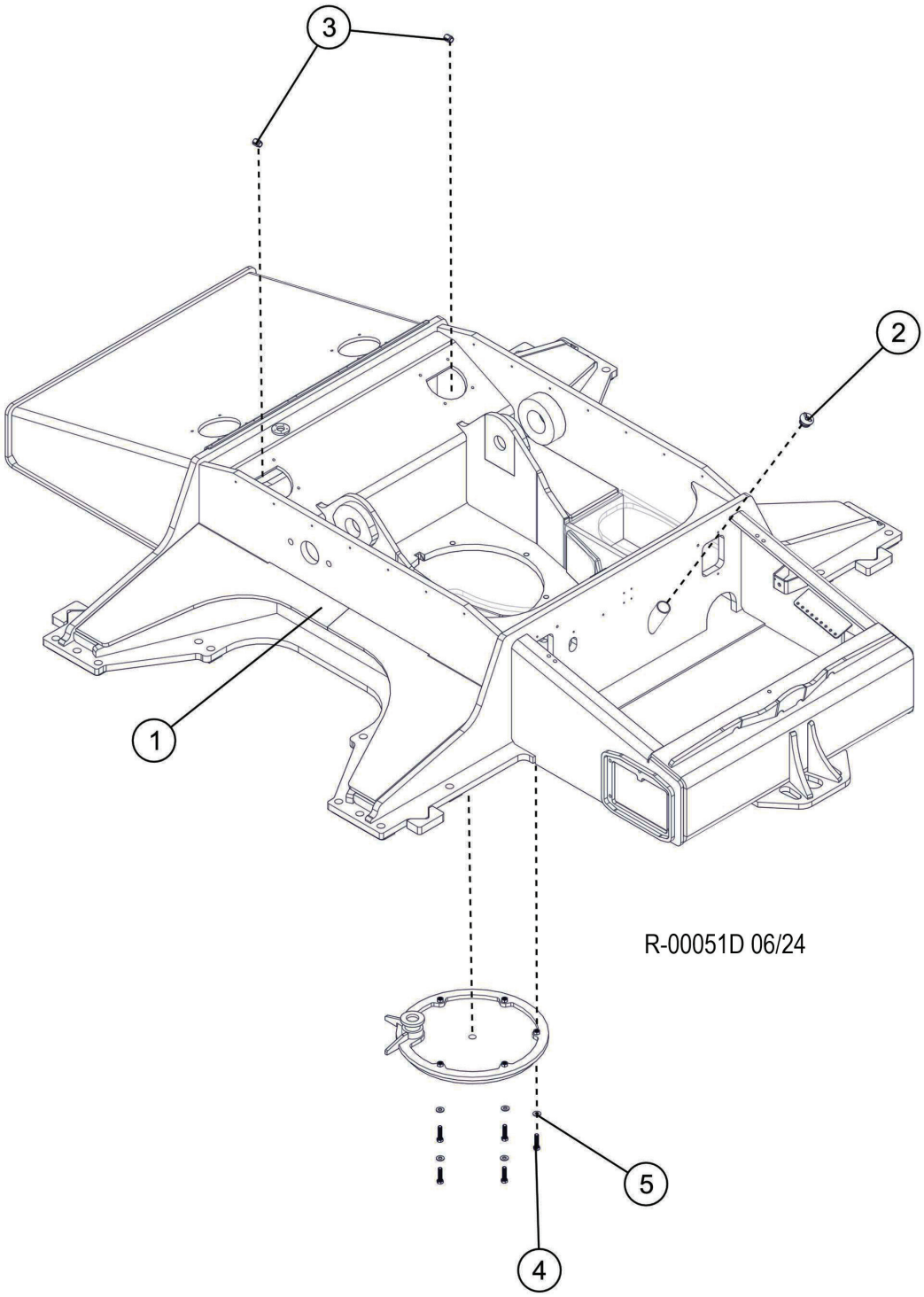


| Item | Part # | Description | Qty. |
|---|---|---|---|
| 1 | 65918 | WELDMENT, CARBODY, LVL, 11’0” TETHERED | 1 |
| 2 | 53728 | CAP, EXPANDABLE - AUX OIL TANK (TRACK) | 1 |
| 3 | 53885 | VALVE, CHECK - FUEL TANK | 2 |
| 4 | 15517 | BOLT - .625” X 2.5” | 5 |
| 5 | 10805 | WASHER, FLAT - .625” | 5 |

# R100-00480 - 10’6 & 11’0 LVL TRUCK LID

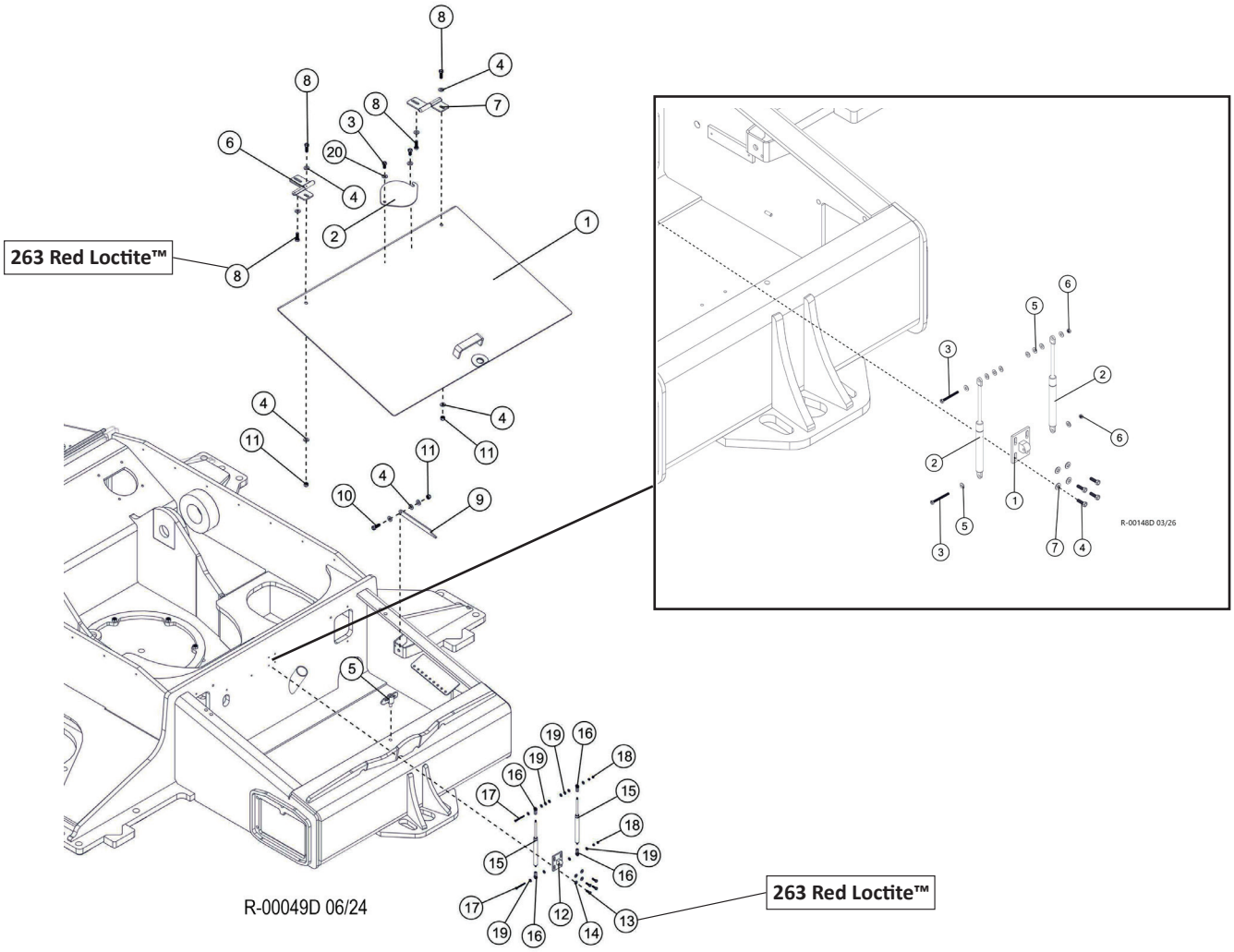


| Item | Part # | Description | Qty. |
|---|---|---|---|
| 1 | 54057 | LID, TRUNK LEVELING T/M BRACED | 1 |
| 2 | 12150 | COVER, ACCESS - RAD FILL / STEER CYL | 1 |
| 3 | 10783 | BOLT - .5” X 1” | 2 |
| 4 | 10804 | WASHER, FLAT - .5” | 9 |
| 5 | 19771 | LATCH, CAM - SHORT (PUMP GUARD) | 1 |
| 6 | 59118 | HINGE ASSY, 1 BOLT, lH | 1 |
| 7 | 59119 | HINGE ASSY, 1 BOLT, RH | 1 |
| 8 | 50100 | BOLT - .5” X 1.25” **263 RED LOCTITE™** | 4 |
| 9 | 54060 | ROD, PROP - LEVELING TRUNK-CURRENT | 1 |
| 10 | 10739 | BOLT - .5” X 1.5” | 1 |
| 11 | 10815 | NUT, LOCK - .5” | 3 |
| 12 | 54059 | BRACKET, TRUNK GAS SPRING **S/N: UP TO 1261** | 1 |
| 13 | 15589 | BOLT - .3125” X 1” **263 RED LOCTITE™** | 4 |
| 14 | 10801 | WASHER, FLAT - .3125” | 4 |
| 15 | 57963 | CYLINDER, GAS SHOCK **S/N: UP TO 1261** | 2 |
| 16 | 54108 | STUD, ROD END - GAS SPRING TRACK TRUCK **S/N: UP TO 1261** | 4 |
| 17 | 58198 | BOLT, M6 -1.00 x 60MM TRUNK SHOCK **S/N: UP TO 1261** | 2 |
| 18 | 16117 | NUT, HEX - 6MM **S/N: UP TO 1261** | 4 |
| 19 | 10757 | WASHER, SAE FLAT - .25” **S/N: UP TO 1261** | 12 |
| 20 | 15534 | WASHER, SAE FLAT - .5” | 2 |
| | | **S/N: 1261 & FORWARD** | |
| 1 | 540590 | BRACKET, TRUNK GAS SPRING | 1 |
| 2 | 695830 | SHOCK, GAS, 325MM X 800N | 2 |
| 3 | 10824 | BOLT - .3125" X 2.5" | 2 |
| 4 | 15589 | BOLT - .3125" X 1" | 4 |
| 5 | 15559 | WASHER, SAE FLAT - .3125" | 10 |
| 6 | 10812 | NUT, LOCK - .3125" | 4 |
| 7 | 10801 | WASHER, FLAT - .3125” | 4 |

# R100-00490 - 3M NL CARBODY

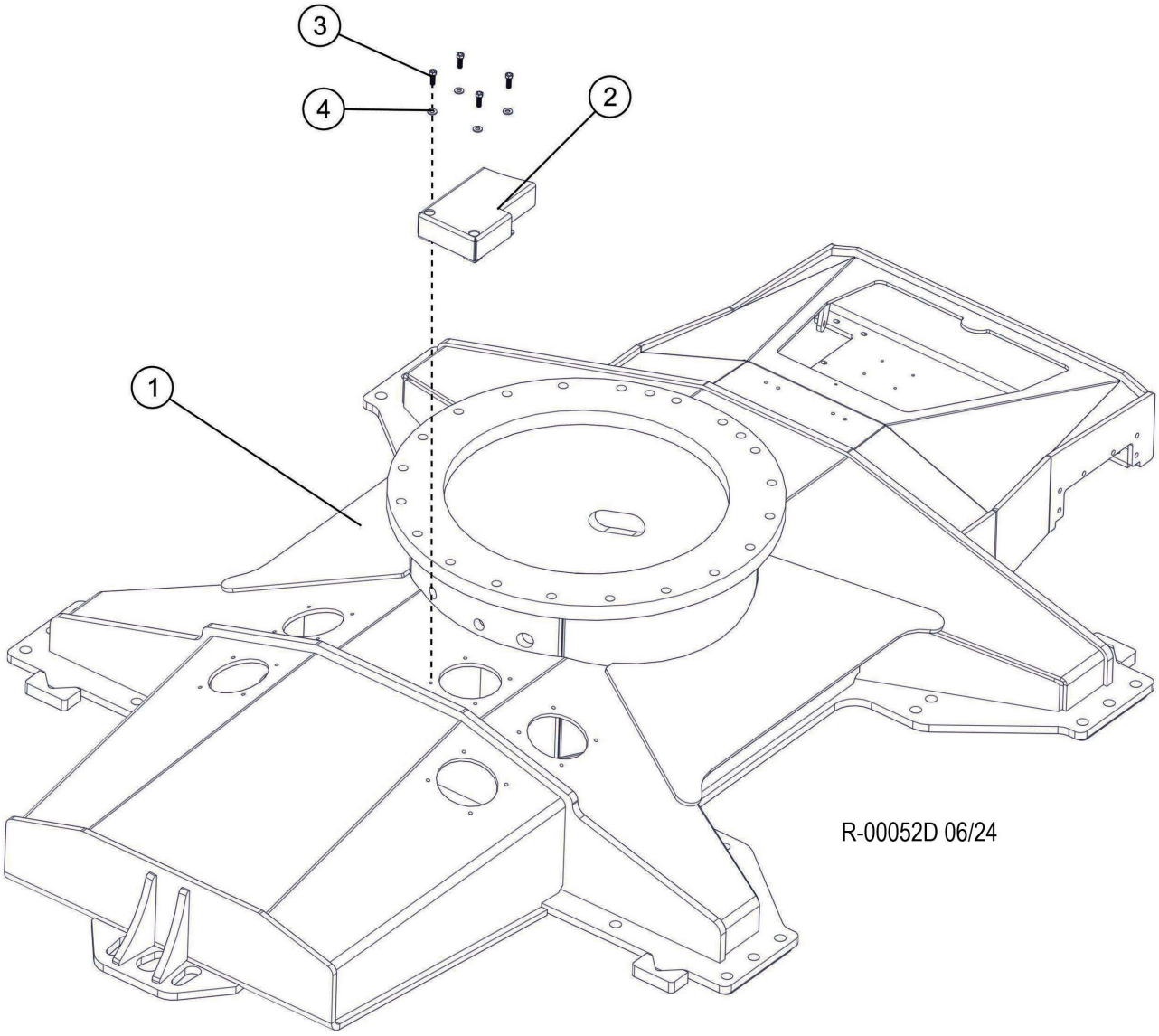


| Item | Part # | Description | Qty. |
|---|---|---|---|
| 1 | 650150 | CARBODY, TRACK MACHINE-N/L 9'-6" (3M) | 1 |
| 2 | 65407 | PLATE, FUEL SENDER COVER-TN 9'6" | 1 |
| 3 | 10739 | BOLT - .5" X 1.5" | 4 |
| 4 | 15534 | WASHER, SAE FLAT - .5" | 4 |

# R100-00500 - 3M NL CARBODY LID

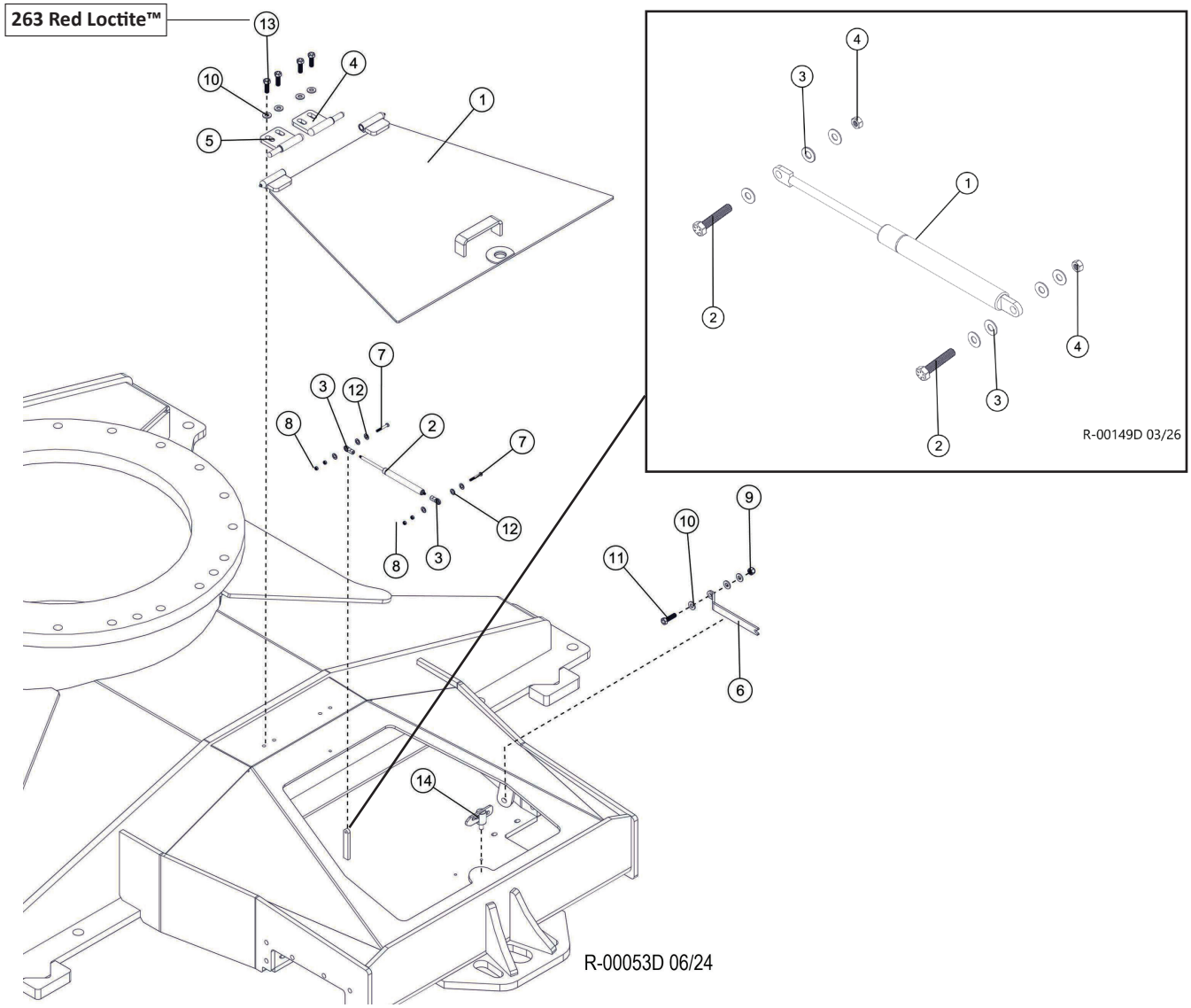


| Item | Part # | Description | Qty. |
|---|---|---|---|
| 1 | 65403 | WELDMENT, TRUNK LID NL | 1 |
| 2 | 57963 | CYLINDER, GAS SHOCK **S/N: UP TO 1261** | 1 |
| 3 | 54108 | STUD, ROD END - GAS SPRING TRACK TRUCK **S/N: UP TO 1261** | 2 |
| 4 | 65135 | HINGE WELD, MALE | 1 |
| 5 | 65310 | HINGE WELD, MALE | 1 |
| 6 | 65317 | PROP ROD- NL TRUNK | 1 |
| 7 | 59132 | BOLT - 6MM-1.0P X 45MM **S/N: UP TO 1261** | 2 |
| 8 | 16117 | NUT, HEX - 6MM **S/N: UP TO 1261** | 4 |
| 9 | 10815 | NUT, HEX - 1/2” | 1 |
| 10 | 10804 | WASHER, FLAT - 0.5” | 7 |
| 11 | 18933 | BOLT - .5” x 1.75” | 1 |
| 12 | 15528 | WASHER, SAE FLAT - .375” **S/N: UP TO 1261** | 6 |
| 13 | 10739 | BOLT - .5” X 1.5” **263 RED LOCTITE™** | 4 |
| 14 | 19771 | LATCH, CAM - SHORT (PUMP GUARD) | 1 |
| | | **S/N: 1261 & FORWARD** | |
| 1 | 695830 | SHOCK, GAS, 325MM X 800N | 1 |
| 2 | 15591 | BOLT - .3125" X 1" | 2 |
| 3 | 15559 | WASHER, SAE FLAT - .3125" | 7 |
| 4 | 10812 | NUT, LOCK - .3125" | 2 |

# R100-00510 - 10’6 NL CARBODY

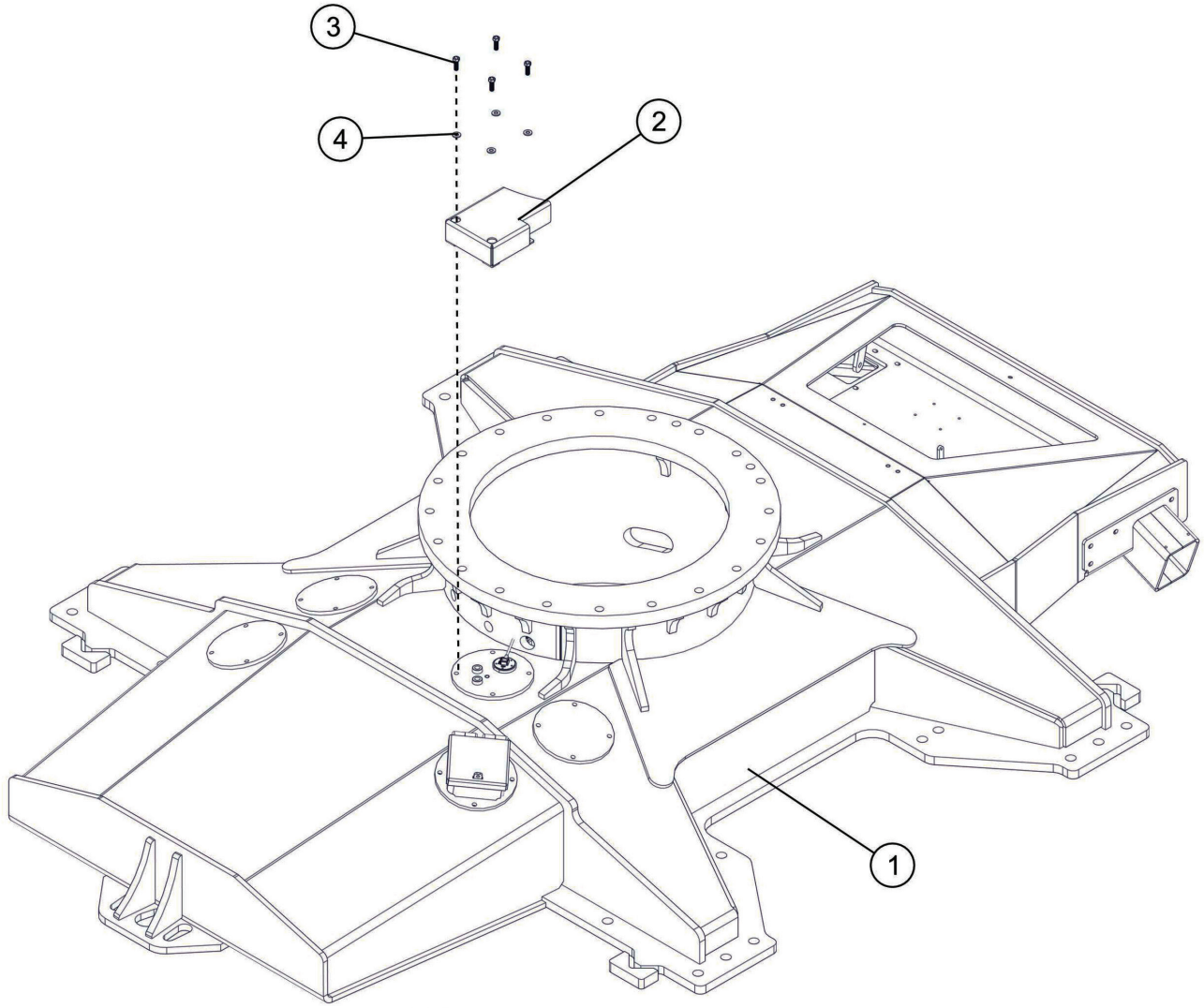


R-00054D 06/24

| Item | Part # | Description | Qty. |
|---|---|---|---|
| 1 | 609350 | CARBODY, TRACK MACHINE-N/L 10’-6” | 1 |
| 2 | 65400 | PLATE, FUEL SENDER COVER-TN | 1 |
| 3 | 10739 | BOLT - .5” X 1.5” | 4 |
| 4 | 15534 | WASHER, SAE FLAT - .5” | 4 |

# R100-00520 - 10’6 NL TRUNK LID

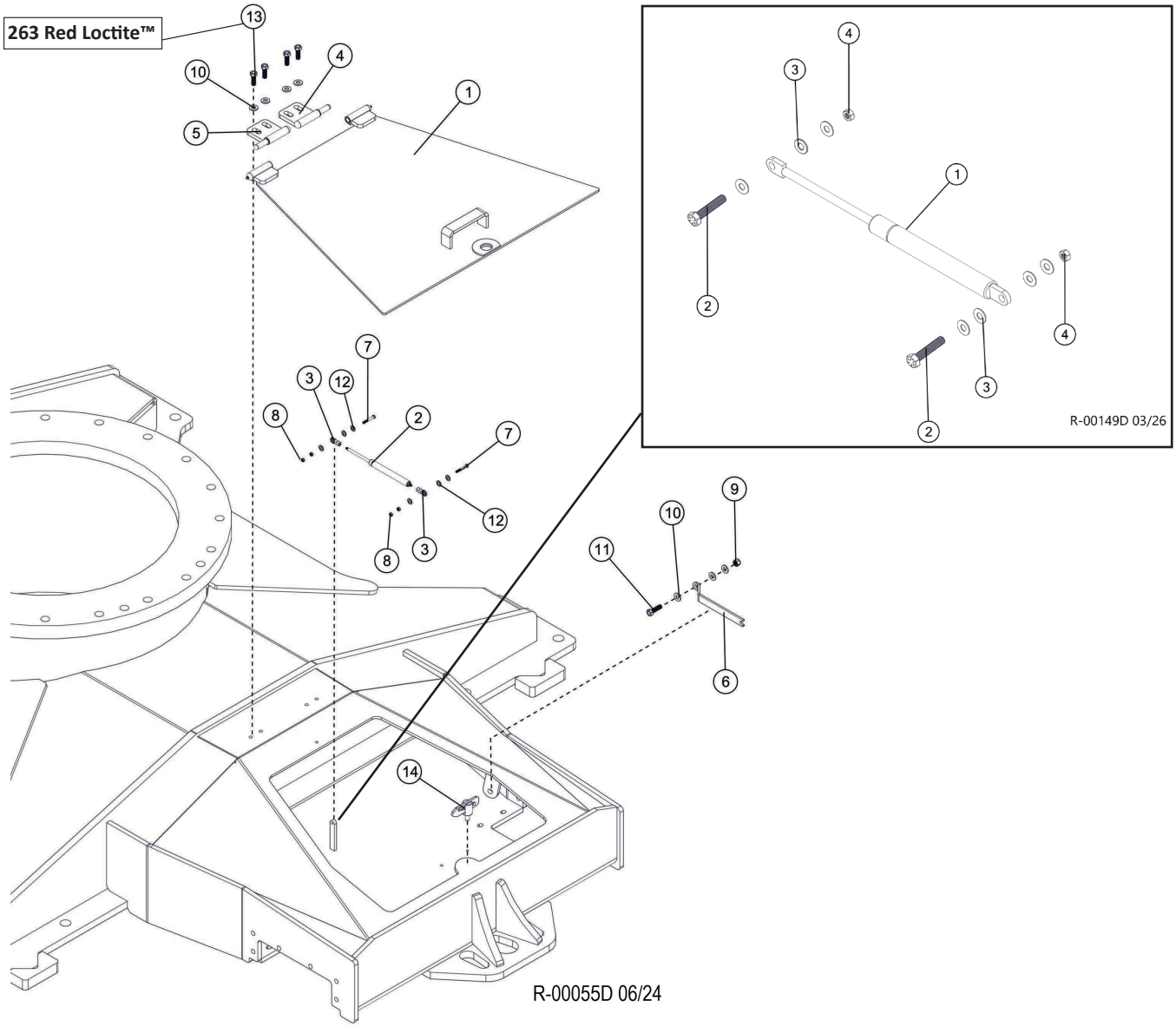


| Item | Part # | Description | Qty. |
|---|---|---|---|
| 1 | 65126 | WELDMENT, TRUNK LID NL | 1 |
| 2 | 57963 | CYLINDER, GAS SHOCK **S/N: UP TO 1261** | 1 |
| 3 | 54108 | STUD, ROD END - GAS SPRING TRACK TRUCK **S/N: UP TO 1261** | 2 |
| 4 | 65135 | HINGE WELD, MALE | 1 |
| 5 | 65310 | HINGE WELD, MALE | 1 |
| 6 | 65317 | PROP ROD- NL TRUNK | 1 |
| 7 | 59132 | BOLT - 6MM-1.0P X 45MM **S/N: UP TO 1261** | 2 |
| 8 | 16117 | NUT, HEX - 6MM **S/N: UP TO 1261** | 4 |
| 9 | 10815 | NUT, HEX - 1/2” | 1 |
| 10 | 10804 | WASHER, FLAT - 0.5” | 7 |
| 11 | 18933 | BOLT - .5” x 1.75” | 1 |
| 12 | 15528 | WASHER, SAE FLAT - .375” **S/N: UP TO 1261** | 6 |
| 13 | 10739 | BOLT - .5” X 1.5” **263 RED LOCTITE™** | 4 |
| 14 | 19771 | LATCH, CAM - SHORT (PUMP GUARD) | 1 |
| | | **S/N: 1261 & FORWARD** | |
| 1 | 695830 | SHOCK, GAS, 325MM X 800N | 1 |
| 2 | 15591 | BOLT - .3125" X 1" | 2 |
| 3 | 15559 | WASHER, SAE FLAT - .3125" | 7 |
| 4 | 10812 | NUT, LOCK - .3125 | 2 |

# R100-00520 - CENTER FRAME U. (3M BLADE) (EU ONLY)

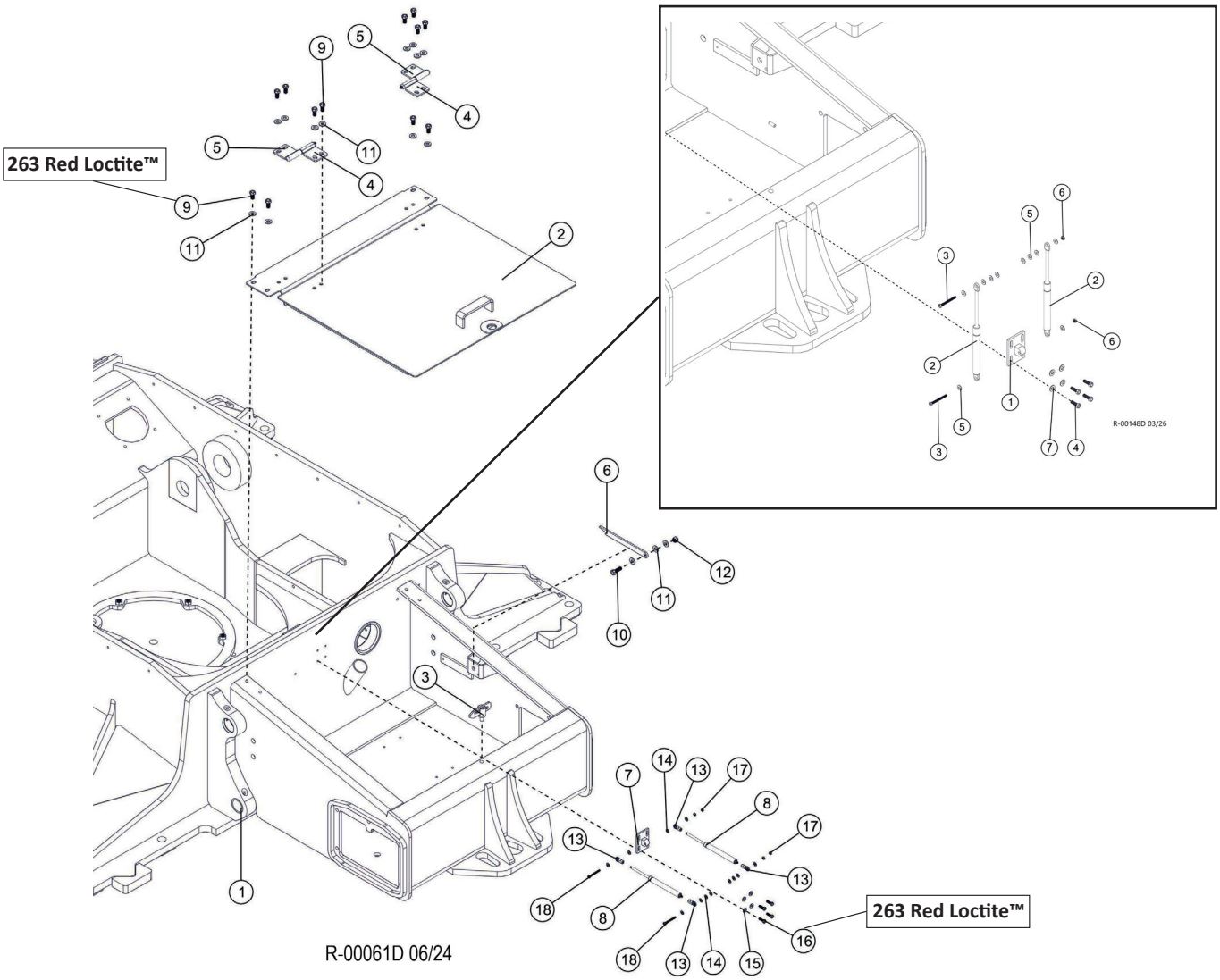


| Item | Part # | Description | Qty. |
|---|---|---|---|
| 1 | 54315 | CARBODY, TRACK MACHINE D7-LEV 3M/W BLD | 1 |
| 2 | 54057 | LID, TRUNK LEVELING T/M BRACED | 1 |
| 3 | 19771 | LATCH, CAM - SHORT (PUMP GUARD) | 1 |
| 4 | 65135 | HINGE WELD, MALE | 2 |
| 5 | 65309 | HINGE WELD, FEMALE, LH | 2 |
| 6 | 54060 | ROD, PROP - LEVELING TRUNK-CURRENT | 1 |
| 7 | 54059 | BRACKET, TRUNK GAS SPRING **S/N: UP TO 1261** | 1 |
| 8 | 57963 | SHOCK, GAS - TRUNK LID **S/N: UP TO 1261** | 2 |
| 9 | 10783 | BOLT - .5" X 1" **263 RED LOCTITE™** | 12 |
| 10 | 10739 | BOLT - .5" X 1.5" | 1 |
| 11 | 10804 | WASHER, FLAT - .5" | 15 |
| 12 | 10815 | NUT, LOCK - .5" | 1 |
| 13 | 54108 | STUD, ROD END - GAS SPRING TRACK TRUNK **S/N: UP TO 1261** | 4 |
| 14 | 10757 | WASHER, SAE FLAT - .25" **S/N: UP TO 1261** | 12 |
| 15 | 10801 | WASHER, FLAT - .3125" | 4 |
| 16 | 15589 | BOLT - .3125" X 1" **263 RED LOCTITE™** | 4 |
| 17 | 16117 | NUT, HEX - 6MM **S/N: UP TO 1261** | 4 |
| 18 | 58198 | BOLT, M6 -1.00 x 60MM TRUNK SHOCK **S/N: UP TO 1261** | 2 |
| | | **S/N: 1261 & FORWARD** | |
| 1 | 540590 | BRACKET, TRUNK GAS SPRING | 1 |
| 2 | 695830 | SHOCK, GAS, 325MM X 800N | 2 |
| 3 | 10824 | BOLT - .3125" X 2.5" | 2 |
| 4 | 15589 | BOLT - .3125" X 1" | 4 |
| 5 | 15559 | WASHER, SAE FLAT - .3125" | 10 |
| 6 | 10812 | NUT, LOCK - .3125 | 4 |
| 7 | 10801 | WASHER, FLAT - .3125" | 4 |

# R100-00530 - TRACK FRAME 8.0P, 48L

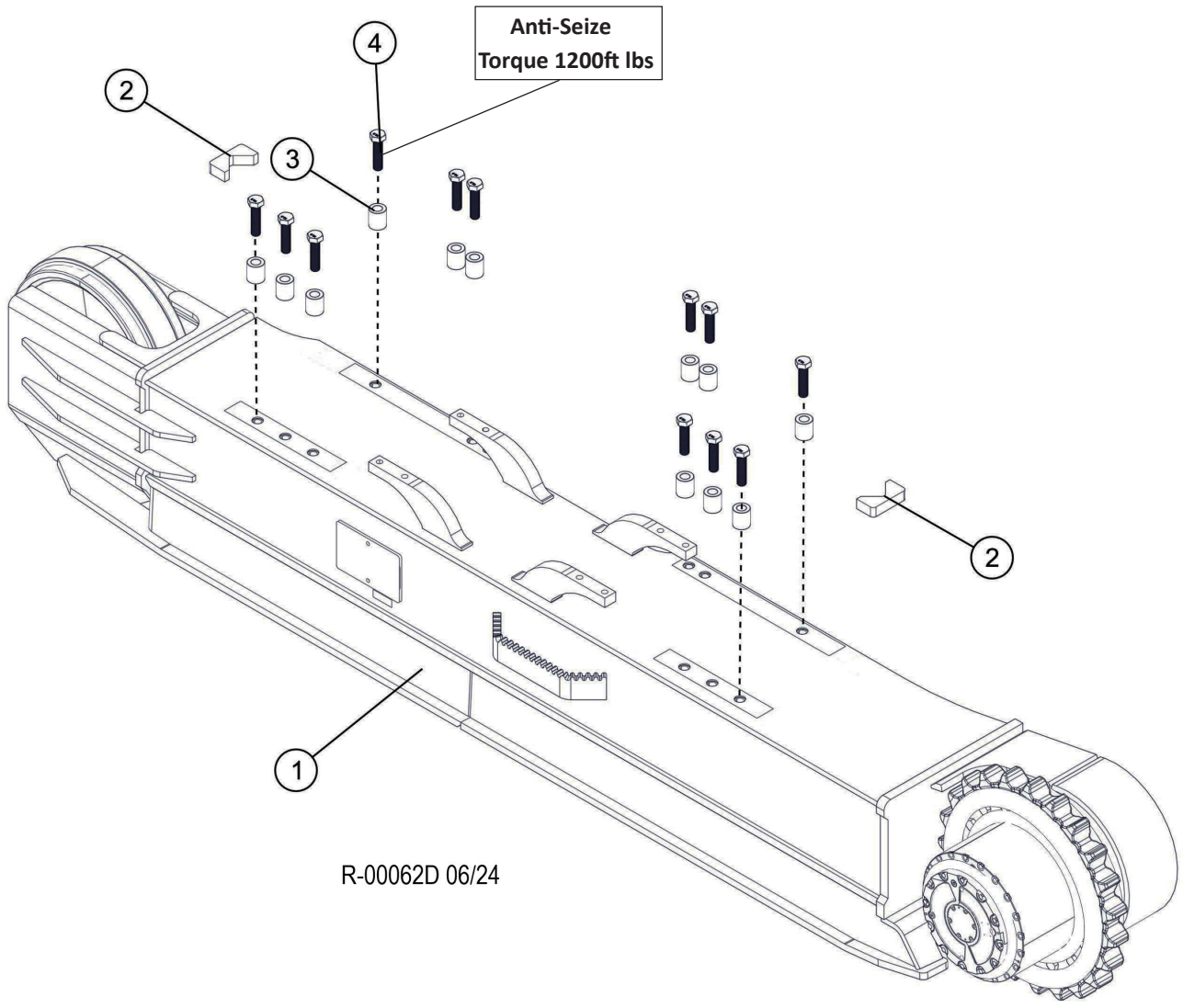


| Item | Part # | Description | Qty. |
|---|---|---|---|
| 1 | 57579 | TRACK FRAME - CAT 325L 8170 DRIVES (NOTE: Includes Left & Right Sides) | 1 |
| 2 | 43137 | PLATE, LOCKING | 4 |
| 3 | 12464 | SPACER, BOLT - CARBODY (BRAATZ) | 24 |
| 4 | 53139 | BOLT - 30MM-3.5 X 160MM 12.9 **ANTI-SEIZE (TORQUE 1200FT LBS)** | 24 |

# R100-00530 - TRACK FRAME FRONT IDLER ASSEMBLY AND INSTALLATION (725 ONLY)

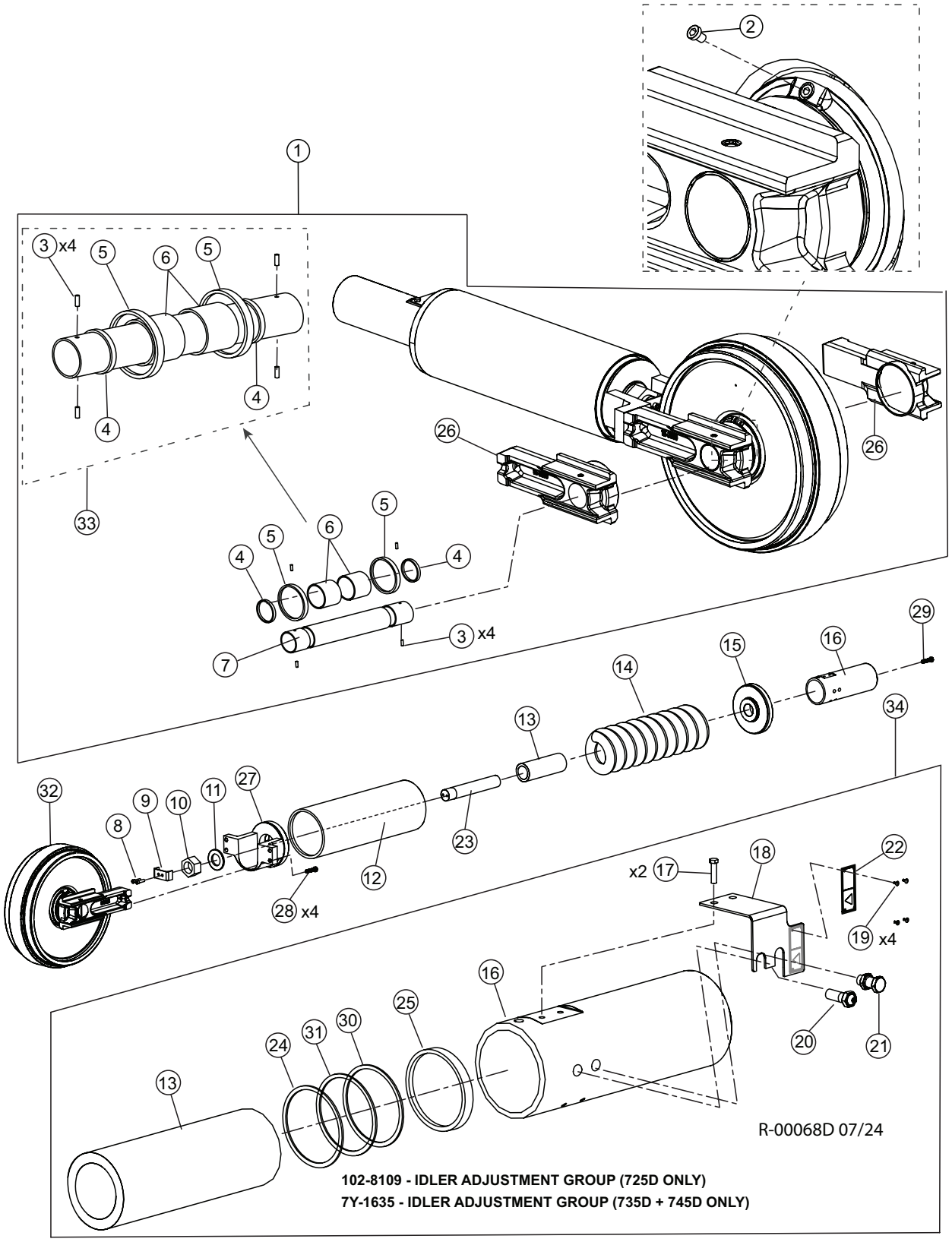

# R100-00530 - TRACK FRAME FRONT IDLER ASSEMBLY AND INSTALLATION (725 ONLY)

| Item | Part # | Description | Qty. |
|---|---|---|---|
| 1 | 17872 | FRONT IDLER ASSEMBLY | 1 |
| 2 | 7H-3171 | PLUG | 1 |
| 3 | 6Y-2266 | PIN | 2 |
| 4 | 8F-8882 | SEAL | 2 |
| 5 | 109-0885 | SEAL GP | 2 |
| 6 | 6Y-2272 | BEARING | 2 |
| 7 | 112-9951 | SHAFT | 1 |
| 8 | 096-4835 | BOLT | 2 |
| 9 | 221-9781 | STRAP | 1 |
| 10 | 8C-7328 | NUT | 1 |
| 11 | 7Y-0725 | WASHER | 1 |
| 12 | 7Y-0555 | SUPPORT | 1 |
| 13 | 7Y-0680 | PISTON | 1 |
| 14 | 186-2367 | SPRING | 1 |
| 15 | CALL | - | 1 |
| 16 | 102-8112 | CYLINDER | 1 |
| 17 | 8T-4191 | BOLT, | 2 |
| 18 | 113-2824 | PLATE, INCLUDES **ITEM #19 AND #22** | 1 |
| 19 | 4B-4158 | SCREW | 4 |
| 20 | 2S-5926 | VATSE, relief | 1 |
| 21 | 095-2927 | VATSE, fill | 1 |
| 22 | 253-1346 | PLATE-WARNING | 1 |
| 23 | 221-9780 | ROD | 1 |
| 24 | 7Y-0682 | RING, back up | 2 |
| 25 | 093-1436 | SEAL, lip type | 1 |
| 26 | 7I-7767 | BEARING | 2 |
| 27 | 7Y-0734 | SUPPORT | 1 |
| 28 | 8T-6430 | BOLT | 4 |
| 29 | 7X-2563 | BOLT | 2 |
| 30 | 095-1619 | SEAL, o-ring | 2 |
| 31 | 093-1512 | RING, back up | 2 |
| 32 | CALL | - | 1 |
| 33 | 115-7471 | IDLER AS | 1 |
| 34 | 102-8109 | IDLER ADJUSTMENT GROUP | 1 |

# R100-00530 - TRACK FINAL DRIVE (725 ONLY)

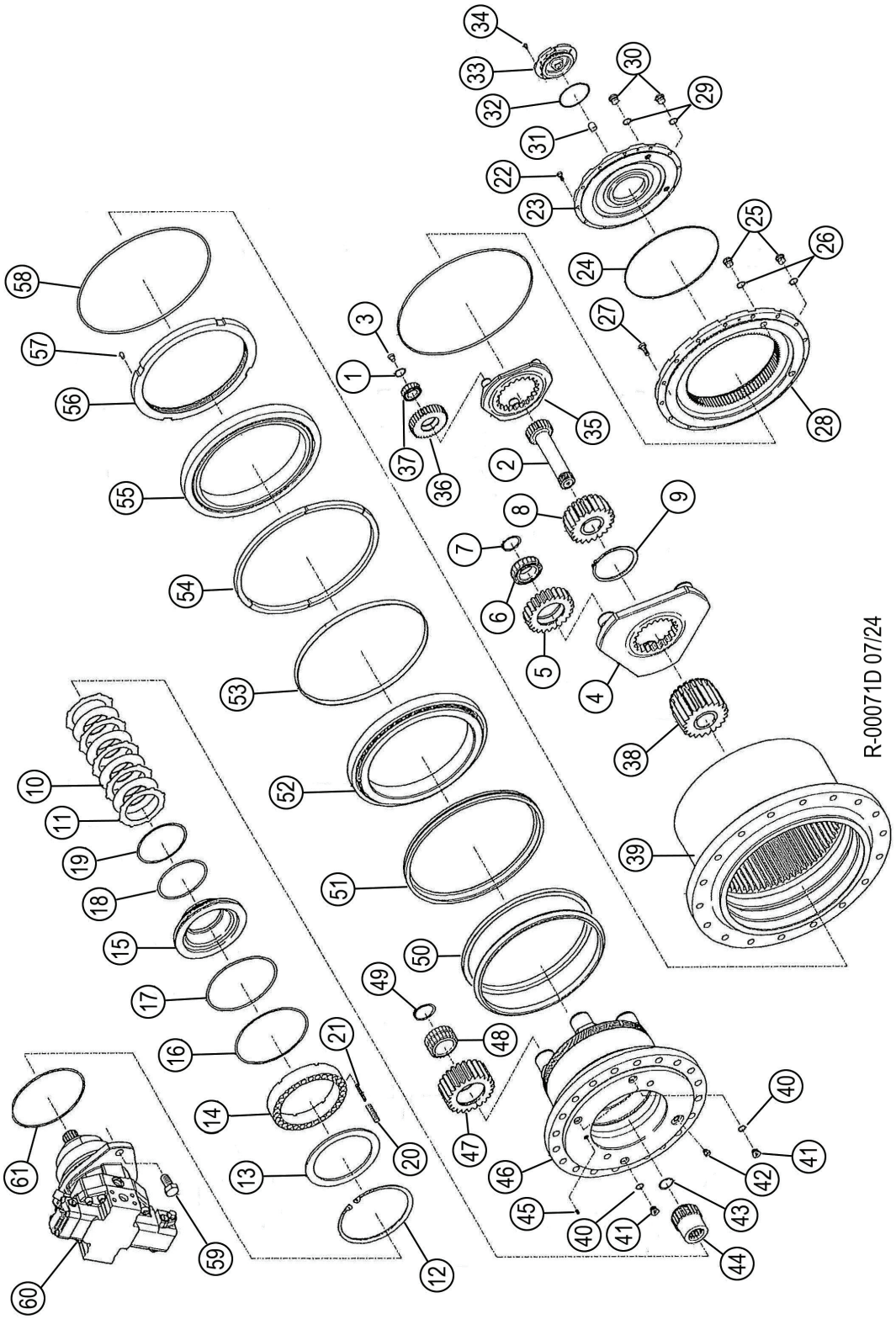

# R100-00530 - TRACK FINAL DRIVE (725 ONLY)

| Item | Part # | Description | Qty. |
|---|---|---|---|
| | 57652 | FINAL DRIVE ASSY. - 725 (CURRENT) | 1 |
| 1 | 916452021 | RETAINING RING | 1 |
| 2 | R916016816 | SUN GEAR SHAFT | 1 |
| 3 | 56356 | SPACER PIN | 1 |
| 4 | R916016886 | PLANET CARRIER | 1 |
| 5 | 58108 | PLANET GEAR | 1 |
| 6 | 58109 | CYLINDER ROLLER BEARING | 1 |
| 7 | R916452038 | RETAINING RING | 1 |
| 8 | R916016818 | SUN GEAR | 1 |
| 9 | R916452071 | RETAINING RING | 1 |
| 10 | 58407 | INNER DISK | 4 |
| 11 | 699530 | OUTER DISK | 5 |
| 12 | 53407 | RETAINING RING | 1 |
| 13 | R988080203 | WASHER | 1 |
| 14 | R916015310 | INTERMEDIATE RING | 1 |
| 15 | R988080204 | PISTON | 1 |
| 16 | 58405 | THRUST RING | 1 |
| 17 | 58403 | O-RING | 1 |
| 18 | 58404 | O-RING | 1 |
| 19 | 58406 | THRUST RING | 1 |
| 20 | 56361 | COMPRESSION SPRING | 1 |
| 21 | 56363 | COMPRESSION SPRING | 1 |
| 22 | R916441133 | HEXAGON SCREW | 1 |
| 23 | R916017061 | FLANGE | 1 |
| 24 | R913010870 | O-RING | 1 |
| 25-61 | SEE DESCRIPTION | CALL | |

# R100-00530 - TRACK DRIVE MOTOR (725 ONLY)

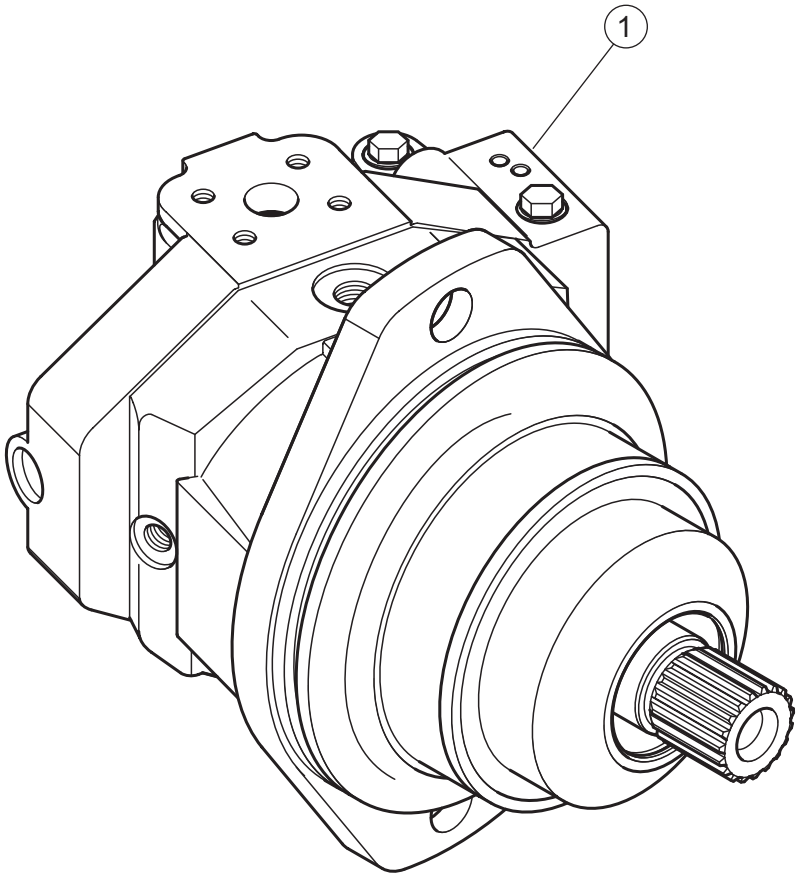


R-00072D 07/24

| Item | Part # | Description | Qty. |
|---|---|---|---|
| 1 | 57653 | MOTOR, TRACK - 8170 FINAL (725) | 1 |
| * | R902095791 | SEAL KIT | 1 |

# R100-00530 - TRACK DRIVE MOTOR (725 ONLY)

**NOTE: APPLY GREASE TO O-RINGS**

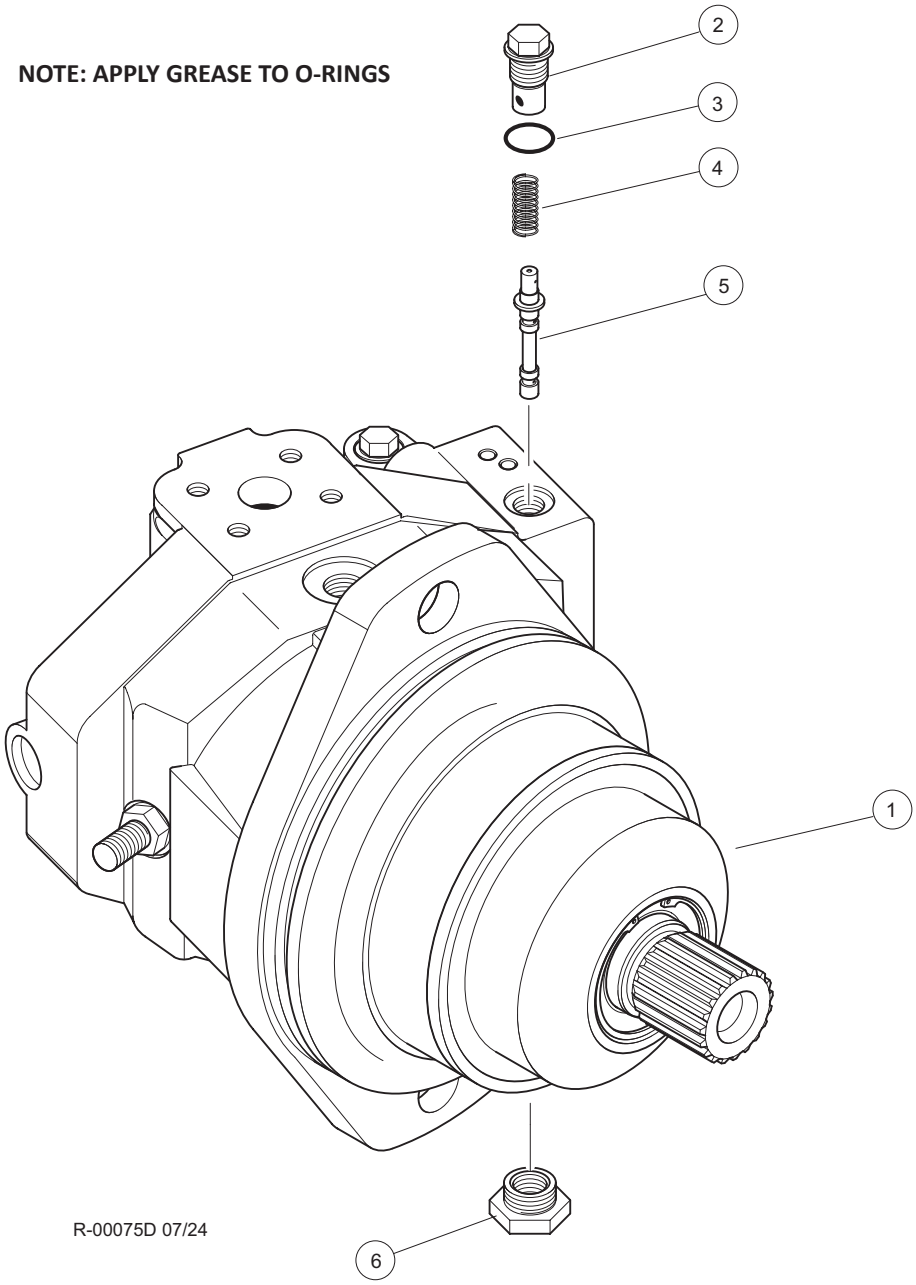


| Item | Part # | Description | Qty. |
|---|---|---|---|
| 1 | 25019 | MOTOR, TRACK 725 | 1 |
| 2 | 21637 | PLUG, stroker cover | 1 |
| 3 | 20720 | O-RING, Stroker cover plug | 2 |
| 4 | 21639 | SPRING, stroker cover | 1 |
| 5 | 21640 | SPOOL, stroker cover | 1 |
| 6 | 21641 | BUSHING, reducer | 1 |
| - | 21635 | IT, SEAL REPAIR | 1 |
| - | 21636 | KIT, SEAL REPAIR | 1 |

# R100-00540 - TRACK FRAME 8.5P, 45L

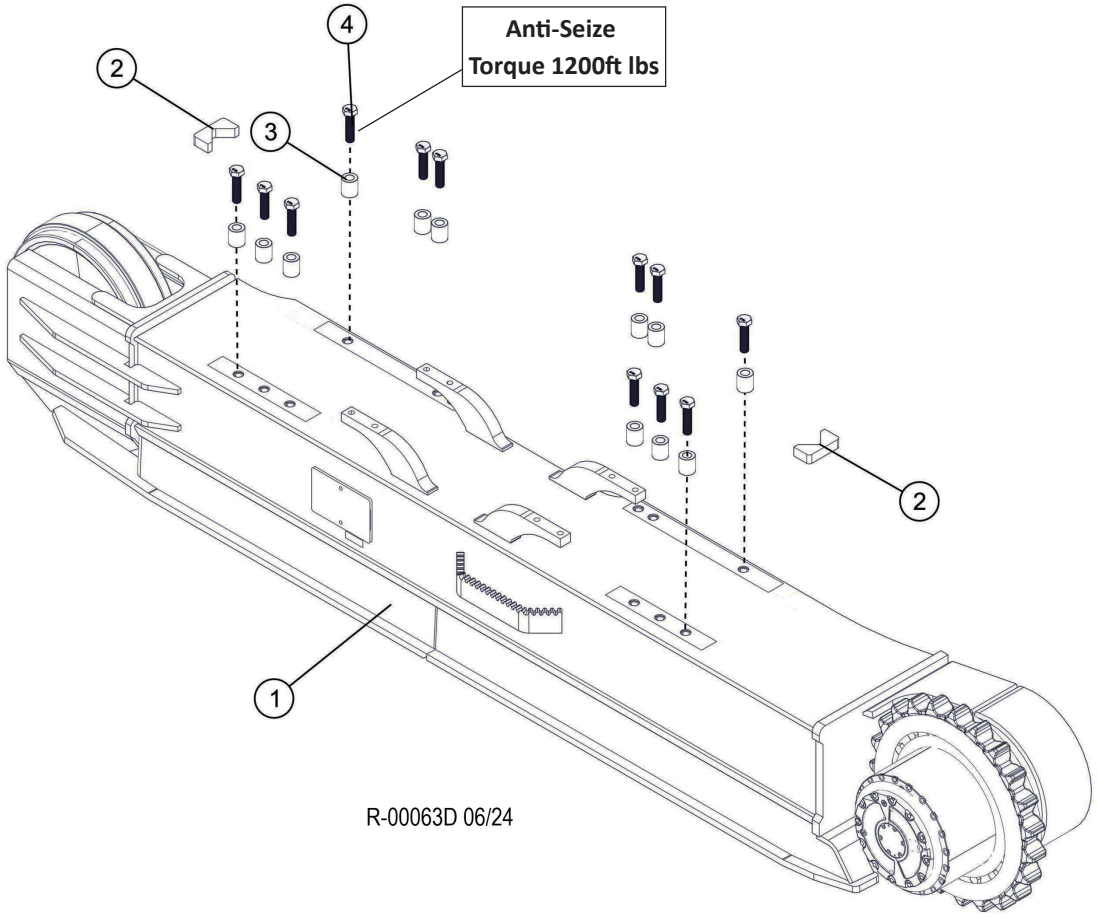


| Item | Part # | Description | Qty. |
|---|---|---|---|
| 1 | 53066 | TRACK FRAME - CAT 330S W/O RAILS AND SHO (NOTE: Includes Left & Right Sides) | 1 |
| 2 | 43137 | PLATE, LOCKING | 4 |
| 3 | 12464 | SPACER, BOLT - CARBODY | 24 |
| 4 | 53139 | BOLT - 30MM-3.5 X 160MM 12.9 **ANTI-SEIZE (TORQUE 1200FT LBS)** | 24 |

# R100-00550 - TRACK FRAME 8.5P, 48L

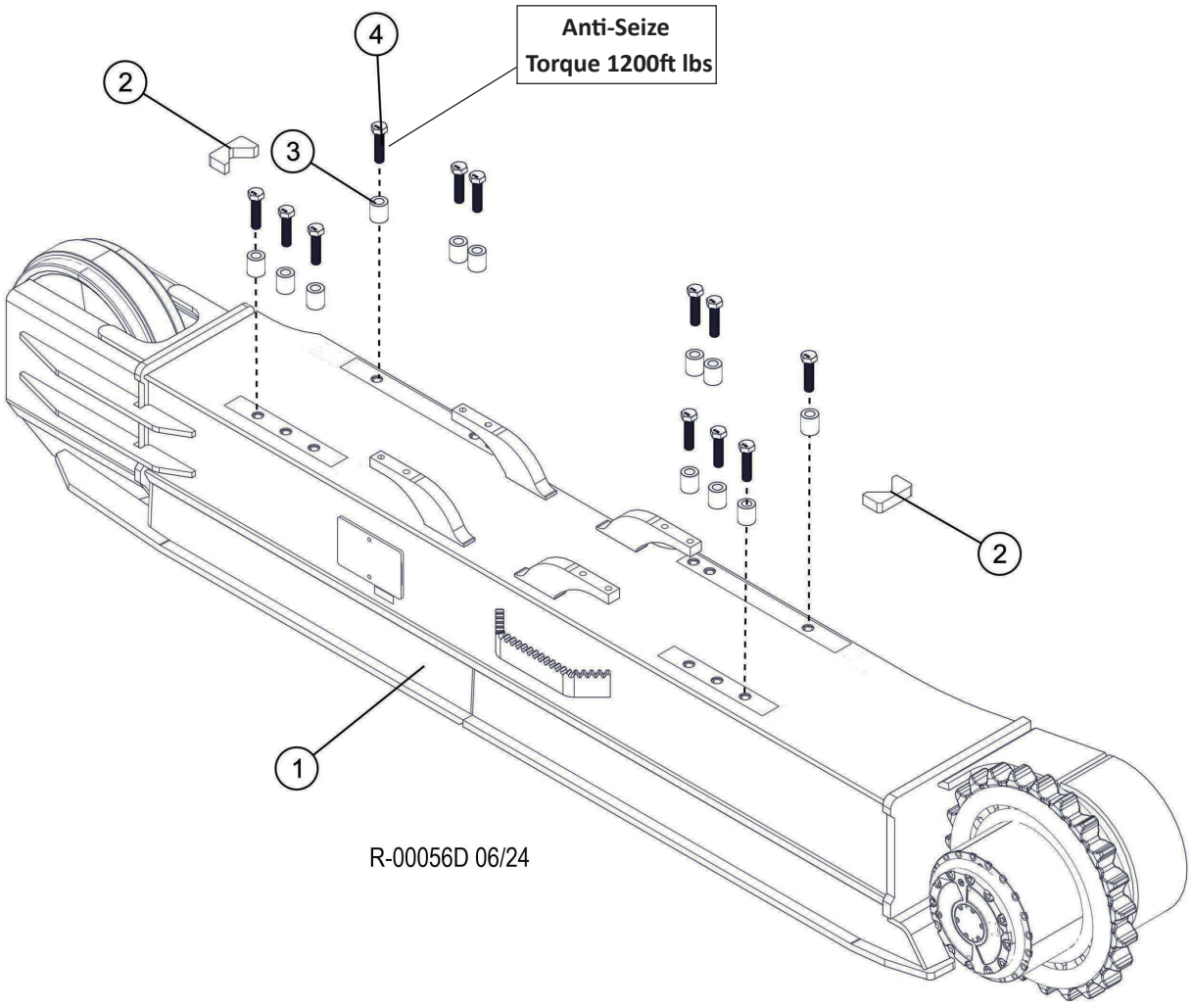


| Item | Part # | Description | Qty. |
|---|---|---|---|
| 1 | 53066 | TRACK FRAME - CAT 330S W/O RAILS AND SHO (NOTE: Includes Left & Right Sides) | 1 |
| 2 | 43137 | PLATE, LOCKING | 4 |
| 3 | 12464 | SPACER, BOLT - CARBODY | 24 |
| 4 | 53139 | BOLT - 30MM-3.5 X 160MM 12.9 **ANTI-SEIZE (TORQUE 1200FT LBS)** | 24 |

# R100-00530 - TRACK FRAME FRONT IDLER ASSEMBLY AND INSTALLATION (735/745 ONLY)

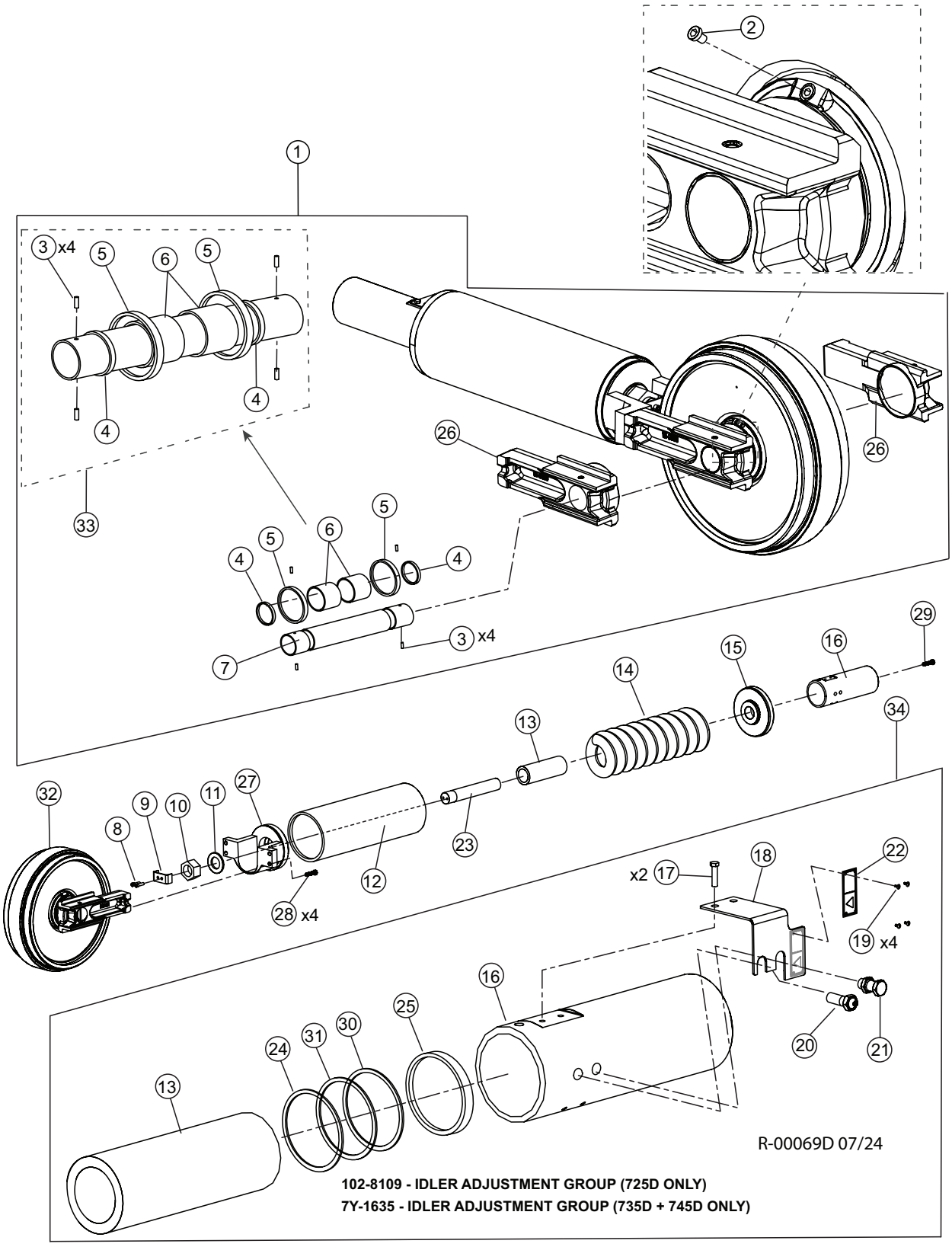

# R100-00530 - TRACK FRAME FRONT IDLER ASSEMBLY AND INSTALLATION (735/745 ONLY)

| Item | Part # | Description | Qty. |
|---|---|---|---|
| 1 | 17873 | FRONT IDLER ASSEMBLY | 1 |
| 2 | 21492 | PLUG | 1 |
| 3 | 21520 | PIN | 4 |
| 4 | 21517 | SEAL | 2 |
| 5 | 109-0881 | SEAL GP | 2 |
| 6 | 6Y-2272 | BEARING | 6 |
| 7 | 21518 | SHAFT | 1 |
| 8 | 8T-9080 | BOLT | 2 |
| 9 | 7Y-1221 | STRAP | 1 |
| 10 | 7Y-1460 | NUT | 1 |
| 11 | 7Y-1459 | WASHER | 1 |
| 12 | 7Y-1878 | SUPPORT | 1 |
| 13 | 7Y-1867 | PISTON | 1 |
| 14 | 7Y-1874 | SPRING | 1 |
| 15 | CALL | - | 1 |
| 16 | 7Y-1866 | CYLINDER | 1 |
| 17 | 8T-4191 | BOLT, | 2 |
| 18 | 6I-6550 | PLATE, INCLUDES **ITEM #19 AND #22** | 1 |
| 19 | 6I-6550 | SCREW | 4 |
| 20 | 2S-5926 | VATSE, relief | 1 |
| 21 | 095-2927 | VATSE, fill | 1 |
| 22 | 6I-6550 | PLATE-WARNING | 1 |
| 23 | 7Y-1872 | ROD | 1 |
| 24 | 7Y-1884 | RING, back up | 2 |
| 25 | 093-1437 | SEAL, lip type | 1 |
| 26 | 21519-TS | BEARING | 2 |
| 27 | 101-2620 | SUPPORT | 1 |
| 28 | 21461 | BOLT | 4 |
| 29 | 21459 | BOLT | 2 |
| 30 | 248-7178 | SEAL, o-ring | 2 |
| 31 | 093-1509 | RING, back up | 2 |
| 32 | CALL | - | 1 |
| 33 | 136-3874 | IDLER AS | 1 |
| 34 | 7Y-1635 | IDLER ADJUSTMENT GROUP | 1 |

# R100-00530 - TRACK FINAL DRIVE ASSEMBLY AND INSTALLATION (735/745 ONLY)

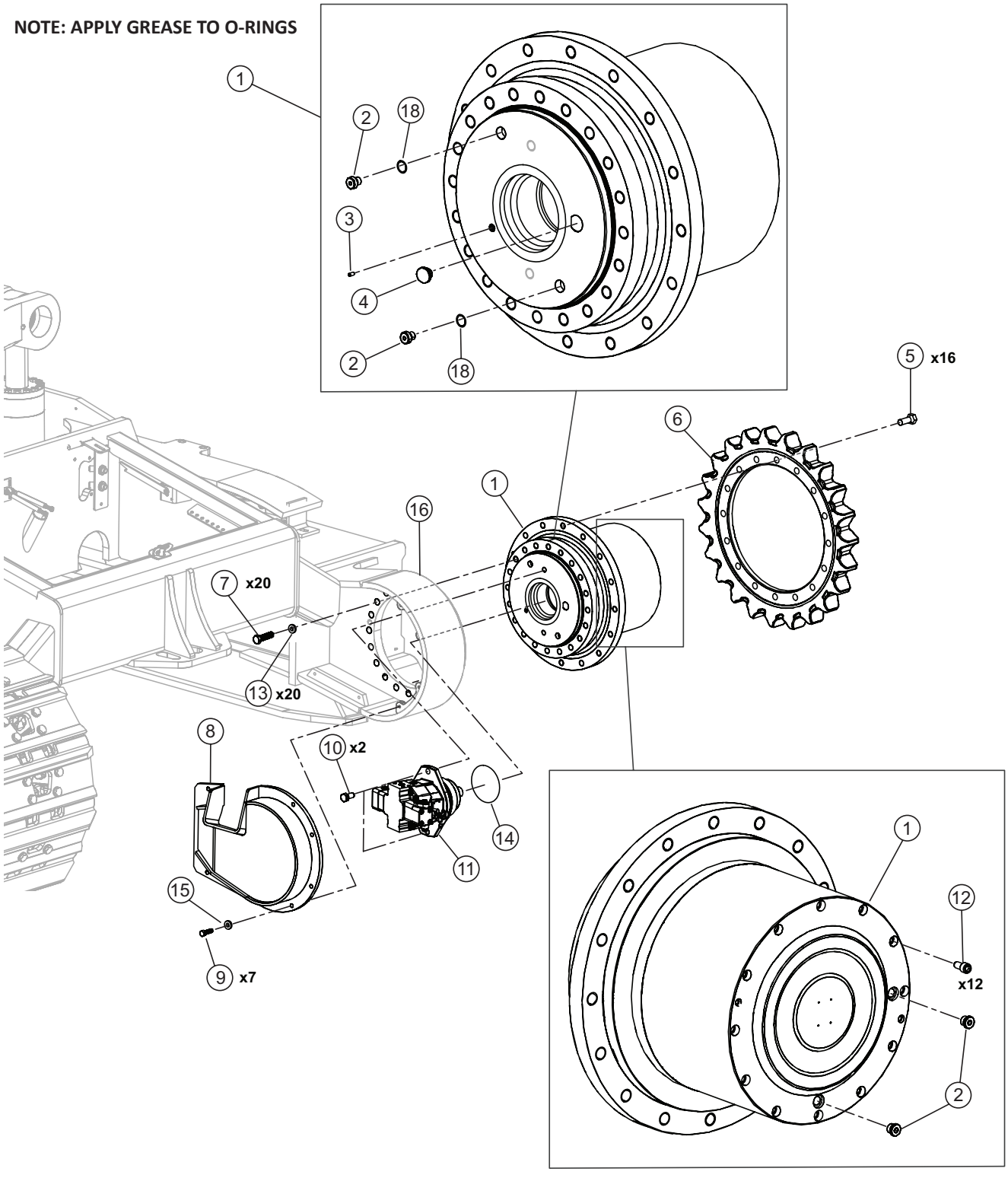


R-00070D 07/24

# R100-00530 - TRACK FINAL DRIVE ASSEMBLY AND INSTALLATION (735/745 ONLY)

| Item | Part # | Description | Qty. |
|---|---|---|---|
| 1 | 19860 | FINAL DRIVE ASSY. - 735/745 | 1 |
| 2 | **SEE DESCRIPTION** | CALL | 4 |
| 3 | **SEE DESCRIPTION** | CALL | 1 |
| 4 | **SEE DESCRIPTION** | CALL | 1 |
| 5 | 21444 | BOLT - 24MM (Torque to 660 ft lbs (900 Nm)) (see NOTE below) | 16 |
| 6 | 21443 | SPROCKET, FINAL DRVE (330) | 1 |
| 7 | 24535 | BOLT - 24MM (Torque to 660 ft lbs (900 Nm)) (see NOTE below) | 20 |
| 8 | 17870 | COVER, TRACK DRIVE MOTOR 735 + 745 - LH (T-PRO) | 1 |
| * | 17871 | COVER, TRACK DRIVE MOTOR 735 + 745 - RH (T-PRO) | 1 |
| 9 | 18415 | BOLT - 12MM-1.75P X 30MM | 7 |
| 10 | 21383 | BOLT - (Rexroth 16441363 | 2 |
| 11 | (SEE PAGE) | TRACK HYDRAULIC MOTOR | 2 |
| 12 | SEE DESCRIPTION | CALL | 12 |
| 13 | 19926 | WASHER - HARD 24MM x 80MM (Torque 660 ft lbs (900 Nm)) (See NOTE below) | 20 |
| 14 | 21713 | O-RING, Rexroth Motor, REXROTH PART #:16463252 | 2 |
| 15 | 18735 | WASHER, FLAT - 12MM | 7 |
| 16 | (SEE PAGE) | TRACK FRAME ASSEMBLY | 1 |

(SEE PAGE) See referenced page for component or assembly breakdown.

NOTE: Use Loctite 272 (blue / medium) during installation.

# R100-00530 - TRACK DRIVE MOTOR (735 AND 745 ONLY)

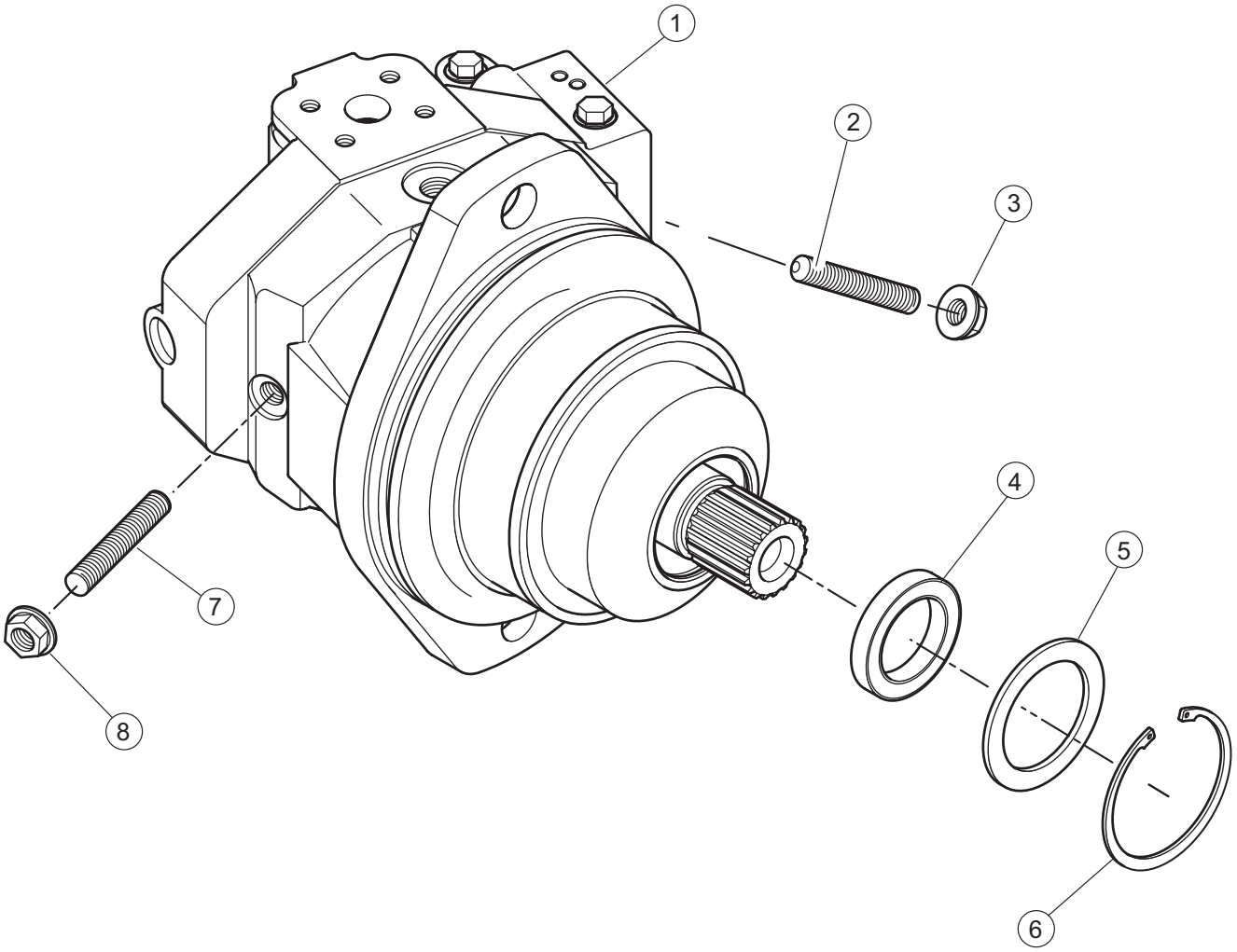


R-00073D 07/24

| Item | Part # | Description | Qty. |
|---|---|---|---|
| 1 | 21011 | MOTOR, TRACK 735 AND 745 | 1 |
| 2 | 21633 | SCREW | 1 |
| 3 | 20689 | NUT | 2 |
| 4 | 21628 | SEAL | 1 |
| 5 | 21630 | SHIM | 1 |
| 6 | 21632 | RING | 1 |
| 7 | 21634 | SCREW | 1 |
| * | 21636 | KIT, SEAL REPAIR | 1 |

# R100-00530 - TRACK DRIVE MOTOR (735 AND 745 ONLY)

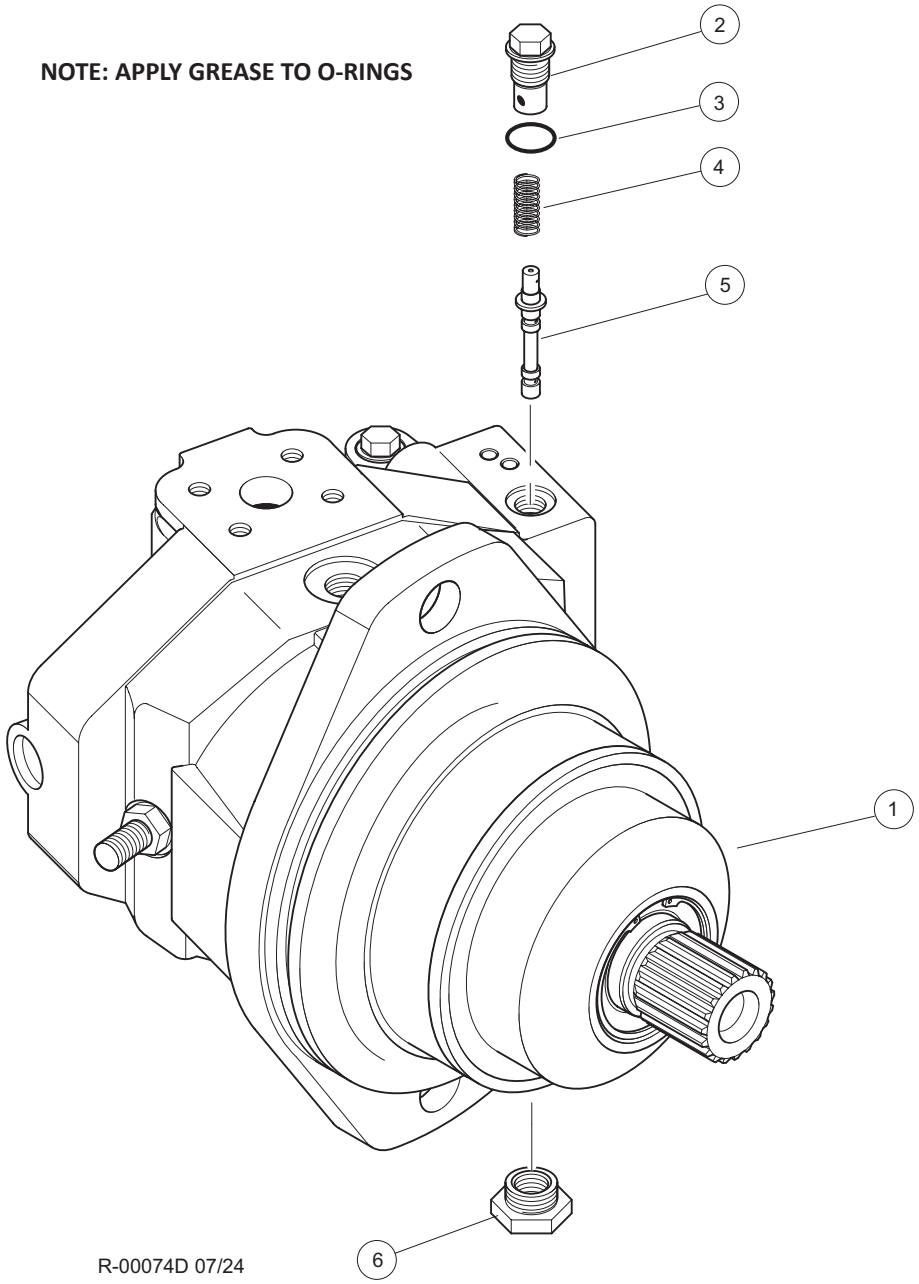


| Item | Part # | Description | Qty. |
|---|---|---|---|
| 1 | 21011 | MOTOR, TRACK 735/745 | 1 |
| 2 | 21638 | PLUG, stroker cover | 1 |
| 3 | 20720 | O-RING, Stroker cover plug | 2 |
| 4 | 21639 | SPRING, stroker cover | 1 |
| 5 | 21640 | SPOOL, stroker cover | 1 |
| 6 | 21642 | BUSHING, reducer | 1 |
| - | 21636 | KIT, SEAL REPAIR | 1 |

# R100-00560 - TRACK COUNTER WEIGHT - 725

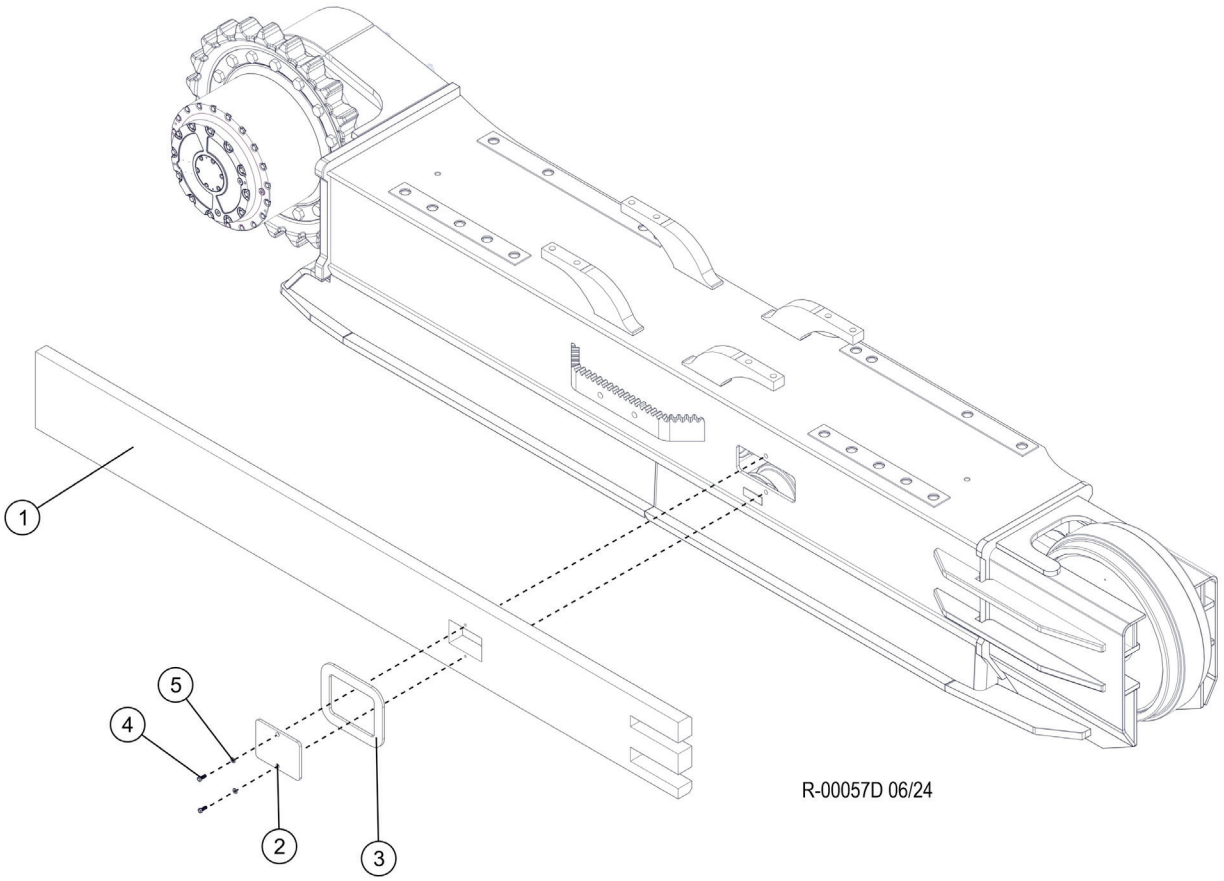


| Item | Part # | Description | Qty. |
|---|---|---|---|
| 1 | 54127-R | COUNTER WEIGHT - TRACK MACHINE 725LT R.H | 1 |
| * | 54127-L | COUNTER WEIGHT - TRACK MACHINE 725LT L.H | 1 |
| 2 | 54250 | COVER, TRACK COUNTERWEIGHT 725 | 2 |
| 3 | 44457 | PLATE, COVER FRAME 725 CT'WT | 2 |
| 4 | 11707 | BOLT - .375" X 1" | 4 |
| 5 | 15528 | WASHER, SAE FLAT - .375" | 4 |

* Means Not Shown

# R100-00570 - TRACK COUNTER WEIGHT - 735

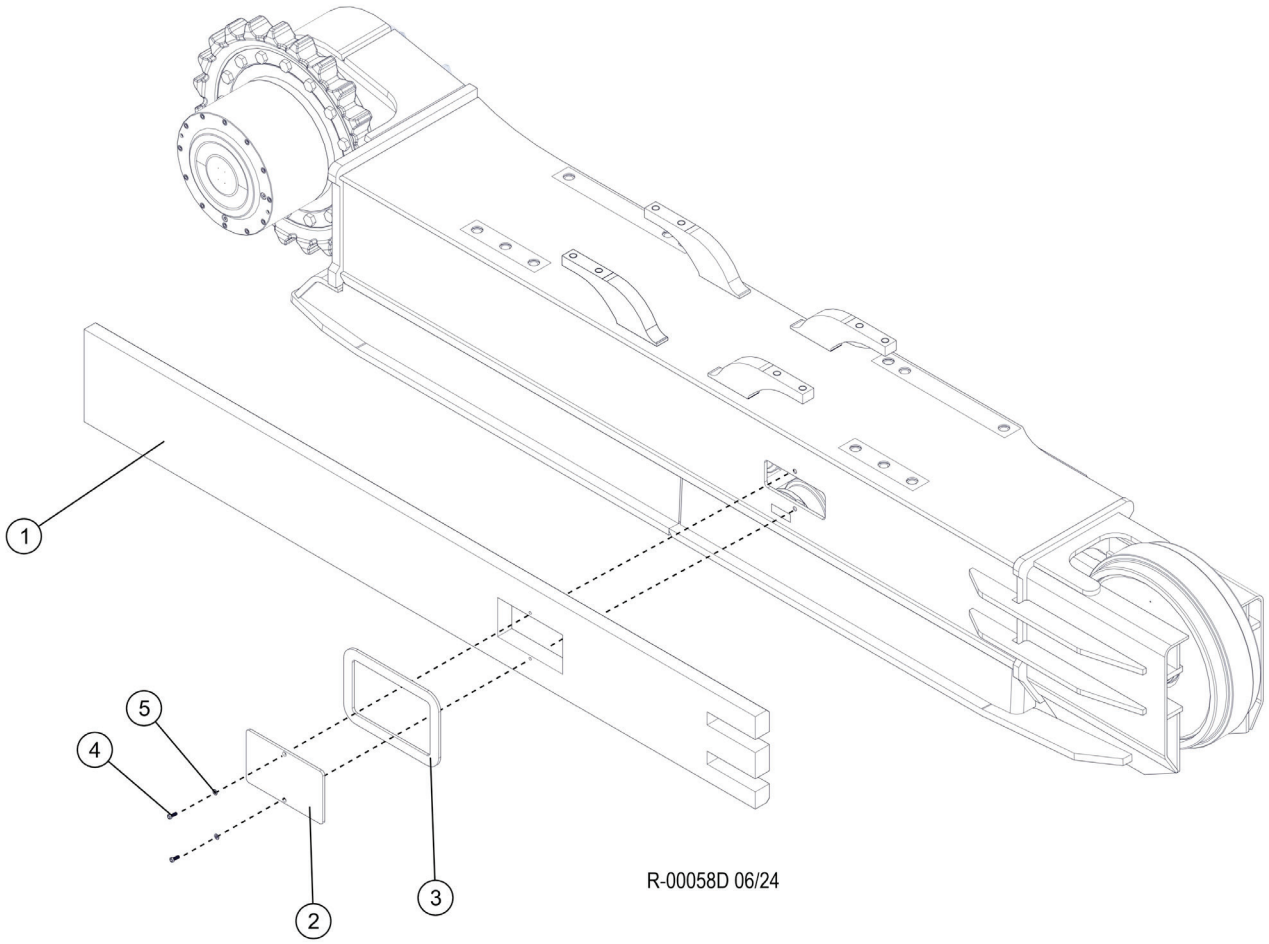


| Item | Part # | Description | Qty. |
|---|---|---|---|
| 1 | 53772-RH | COUNTER WEIGHT, TRACK MACHINE - 735 | 1 |
| * | 53772-LH | COUNTER WEIGHT, TRACK MACHINE - 735 | 1 |
| 2 | 54134 | COVER, TRACK COUNTERWEIGHT 735 | 2 |
| 3 | 44434 | PLATE, COVER FRAME | 2 |
| 4 | 11707 | BOLT - .375” X 1” | 4 |
| 5 | 15528 | WASHER, SAE FLAT - .375” | 4 |

* Means Not Shown

# R100-00580 - TRACK COUNTER WEIGHT - 745

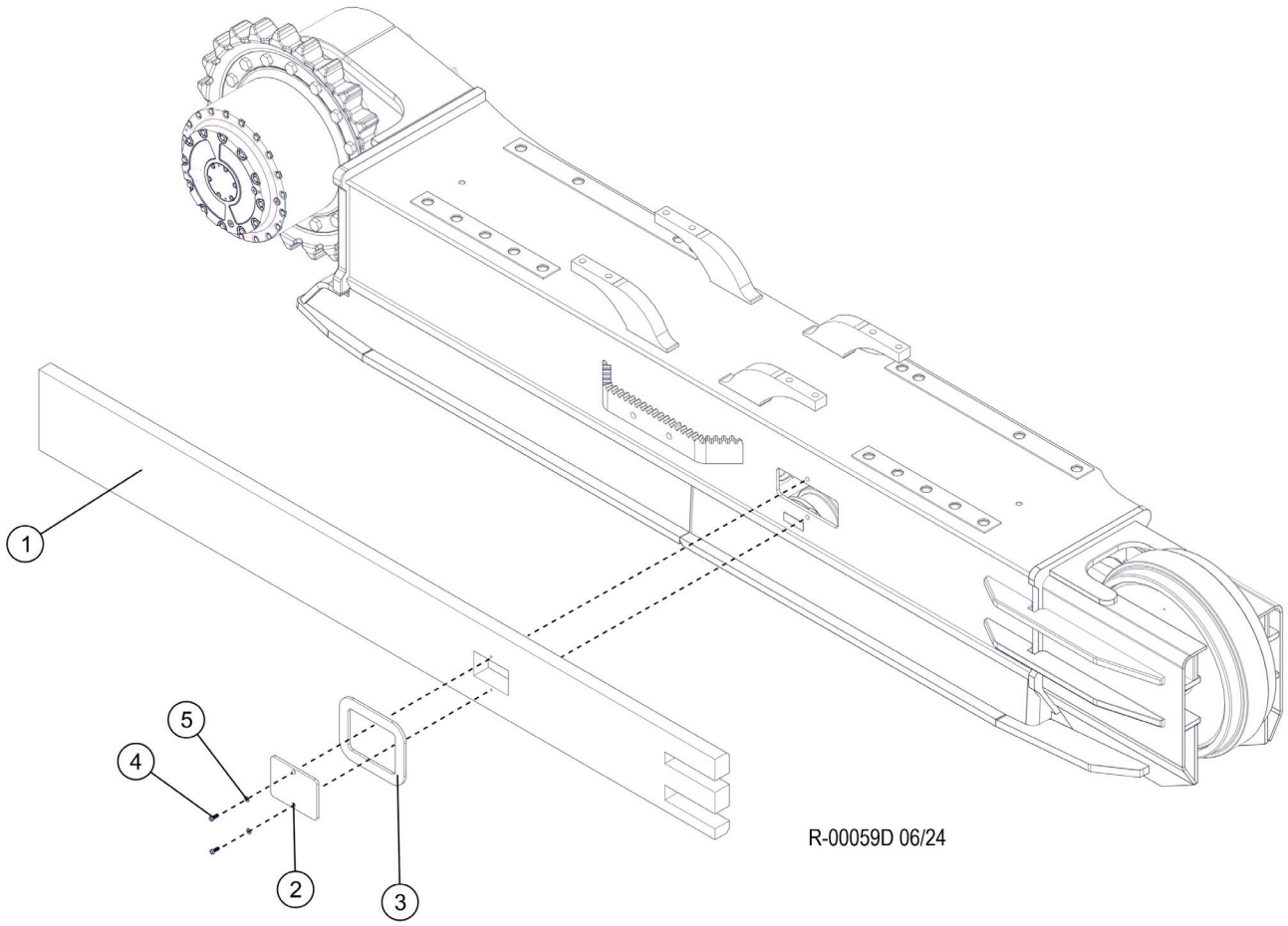


| Item | Part # | Description | Qty. |
|---|---|---|---|
| 1 | 46650-LH | COUNTER WEIGHT - TRACK (745 LONG - LH) | 1 |
| * | 46650-RH | COUNTER WEIGHT - TRACK (745 LONG - RH) | 1 |
| 2 | 54134 | COVER, TRACK COUNTERWEIGHT 735 | 2 |
| 3 | 44434 | PLATE, COVER FRAME | 2 |
| 4 | 11707 | BOLT - .375” X 1” | 4 |
| 5 | 15528 | WASHER, SAE FLAT - .375” | 4 |

* Means Not Shown

# R100-00590 - DEBRIS DEFLECTORS

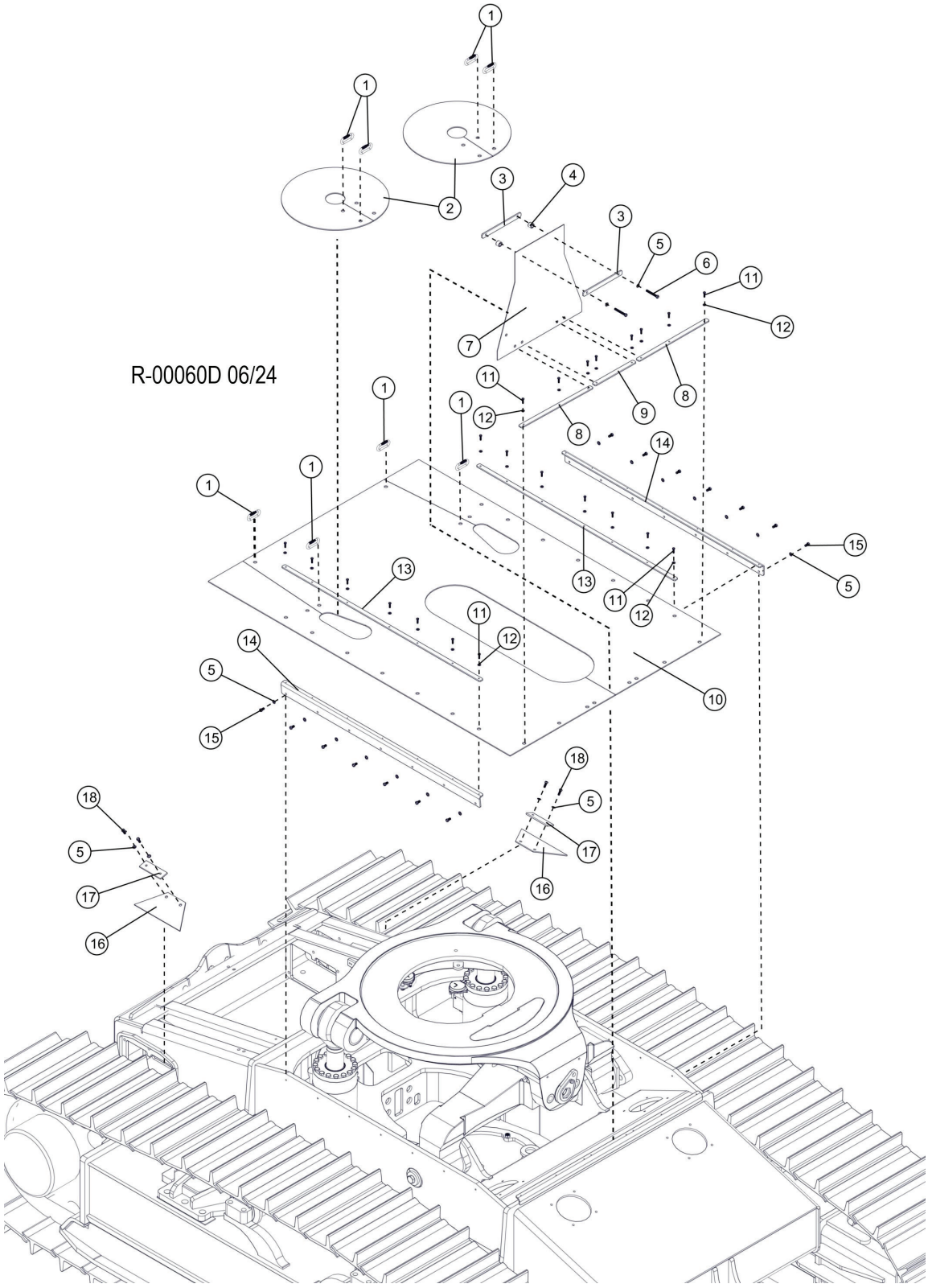

# R100-00590 - DEBRIS DEFLECTORS

| Item | Part # | Description | Qty. |
|---|---|---|---|
| 1 | 18578 | LINK, QUICK | 8 |
| 2 | 53663 | SKIRTING, LEVELING CYLINDER | 2 |
| 3 | 53658 | BAR, RETAINER | 2 |
| 4 | 19219 | SPACER | 2 |
| 5 | 15528 | 3/8” FLAT WASHER | 20 |
| 6 | 10750 | BOLT - .375” X 3” | 2 |
| 7 | 53661 | SKIRTING, FRONT CASTING | 1 |
| 8 | 53234 | BAR, RETAINER SKIRTING FRONT ENDS | 2 |
| 9 | 53259 | BAR, RETAINER SKIRTING FRONT CENTER | 1 |
| 10 | 53660 | SKIRTING, MAIN - FULL LENGTH | 1 |
| 11 | 15576 | BOLT - .25” X 1” | 22 |
| 12 | 10757 | 1/4” FLAT WASHER | 22 |
| 13 | 53235 | BAR, RETAINER SKIRTING SIDE | 2 |
| 14 | 53233 | ATTACHMENT, SKIRTING SIDE | 2 |
| 15 | 15542 | BOLT - .375” X .75” | 14 |
| 16 | 53622 | BELTING,  TRACK CHUTE COVER | 2 |
| 17 | 20209 | RETAINER, RUBBER STEP | 2 |
| 18 | 11707 | BOLT - .375” X 1” | 4 |

# R100-00600 - TRACK CHUTE U. 10’4 - D6 LEVELING

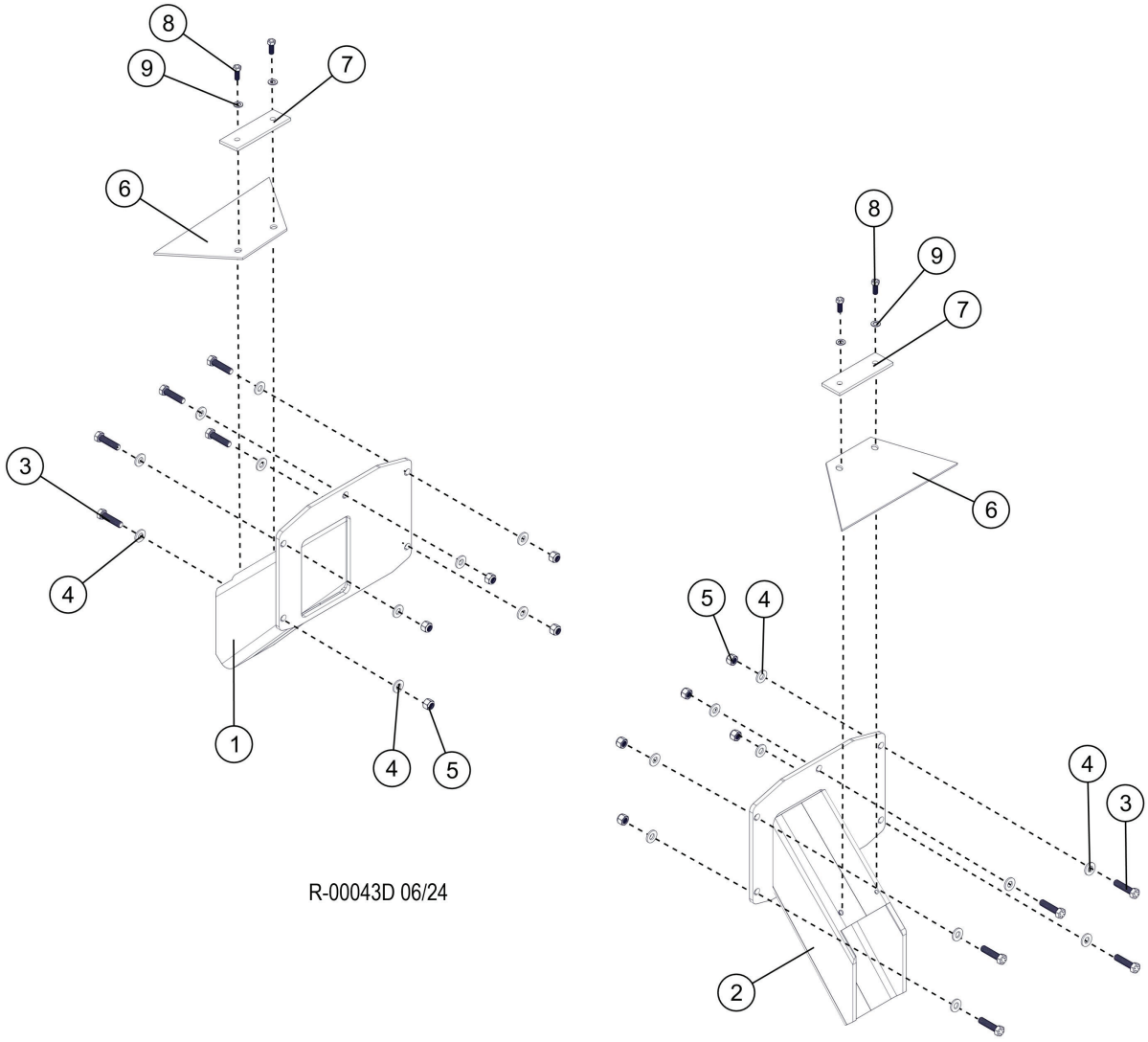


R-00043D 06/24

| Item | Part # | Description | Qty. |
|---|---|---|---|
| 1 | 65516 | WELDMENT, TRACK CHUTE, D6, 10-4 - LH | 1 |
| 2 | 65517 | WELDMENT, TRACK CHUTE, D6, 10-4 - RH | 1 |
| 3 | 10736 | BOLT - .5” X 2” | 10 |
| 4 | 15534 | WASHER, SAE FLAT - .5” | 20 |
| 5 | 10815 | NUT, LOCK - .5” | 10 |
| 6 | 53622 | BELTING, TRACK CHUTE COVER | 2 |
| 7 | 20209 | RETAINER, RUBBER STEP | 2 |
| 8 | 11707 | BOLT - .375” X 1” | 4 |
| 9 | 15528 | WASHER, SAE FLAT - .375” | 4 |

# R100-00610 - TRACK CHUTE U. 3M - D6 LEVELING

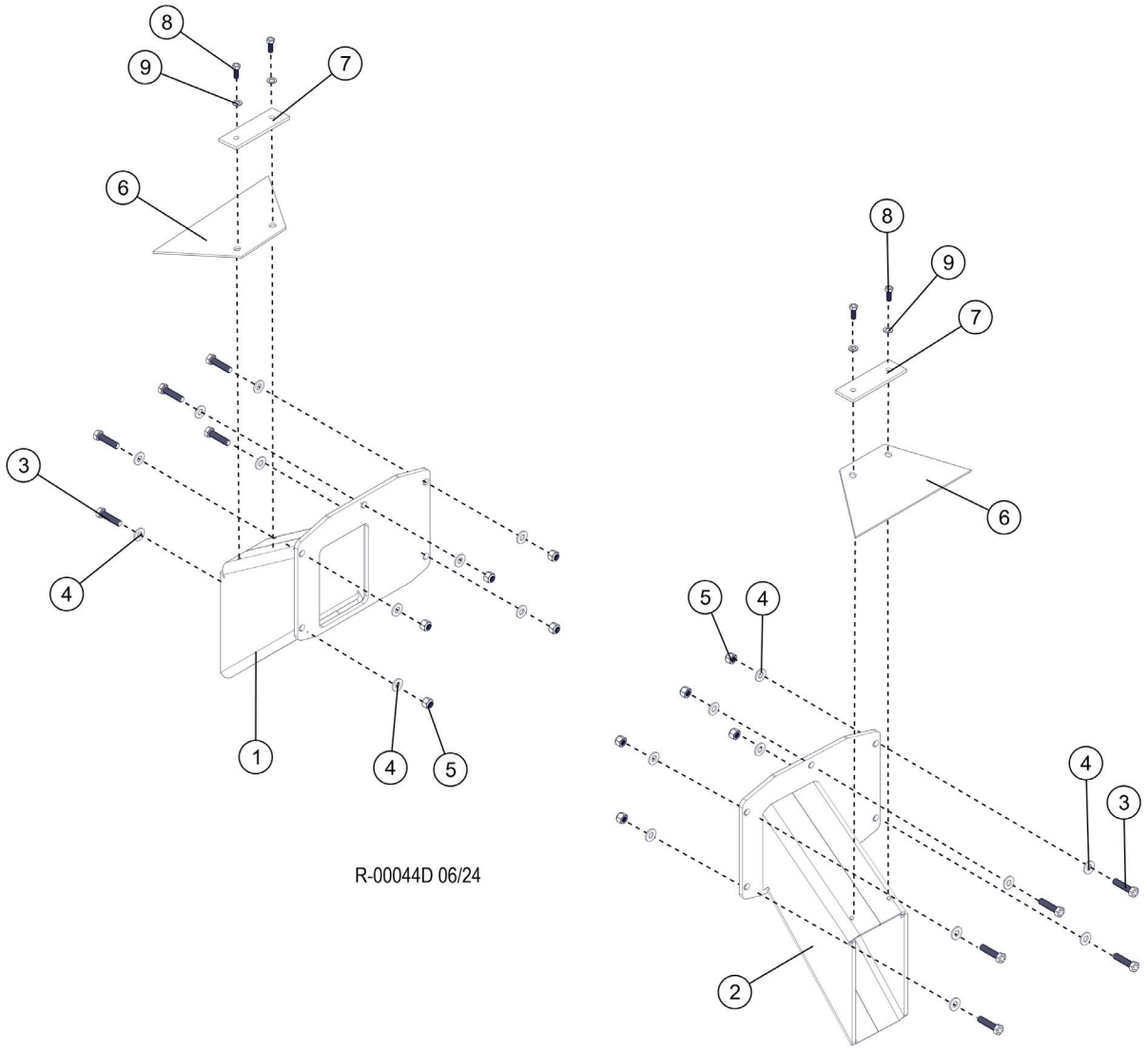


| Item | Part # | Description | Qty. |
|---|---|---|---|
| 1 | 65508 | WELDMENT, TRACK CHUTE, 3M D6 - LH | 1 |
| 2 | 65509 | WELDMENT, TRACK CHUTE, 3M D6 - RH | 1 |
| 3 | 10736 | BOLT - .5” X 2” | 10 |
| 4 | 15534 | WASHER, SAE FLAT - .5” | 20 |
| 5 | 10815 | NUT, LOCK - .5” | 10 |
| 6 | 53622 | BELTING, TRACK CHUTE COVER | 2 |
| 7 | 20209 | RETAINER, RUBBER STEP | 2 |
| 8 | 11707 | BOLT - .375” X 1” | 4 |
| 9 | 15528 | WASHER, SAE FLAT - .375” | 4 |

# R100-00620 - TRACK CHUTE U. 10’6 - D6 LEVELING

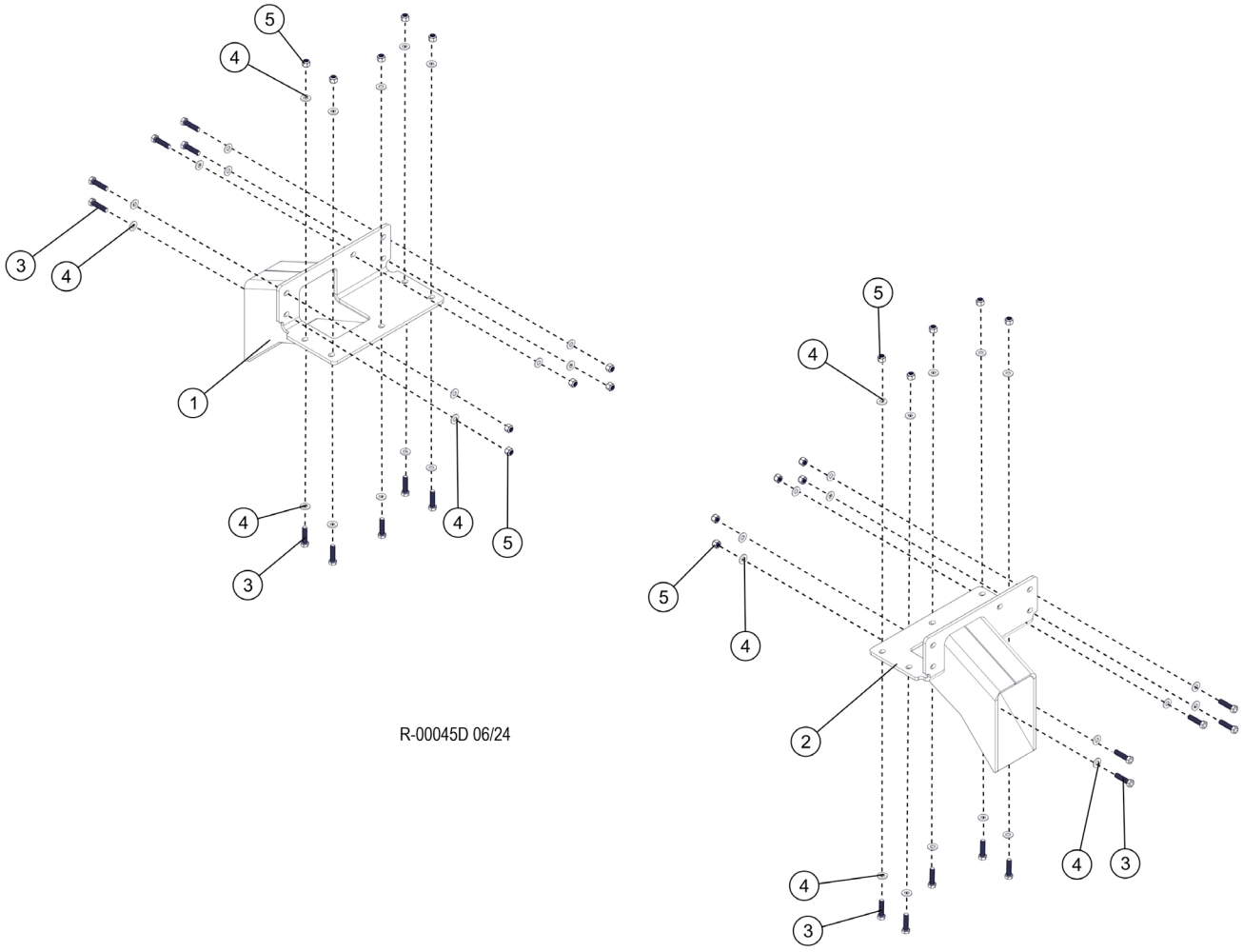


| Item | Part # | Description | Qty. |
|---|---|---|---|
| 1 | 60970 | WELDMENT, D6 TRACK CHUTE 10’6” - LH | 1 |
| 2 | 60969 | WELDMENT, D6 TRACK CHUTE 10’6” - RH | 1 |
| 3 | 10736 | BOLT - .5” X 2” | 20 |
| 4 | 15534 | WASHER, SAE FLAT - .5” | 40 |
| 5 | 10815 | NUT, LOCK - .5” | 20 |

# R100-00630 - TRACK CHUTE U. 10’4/D7 LEVELING

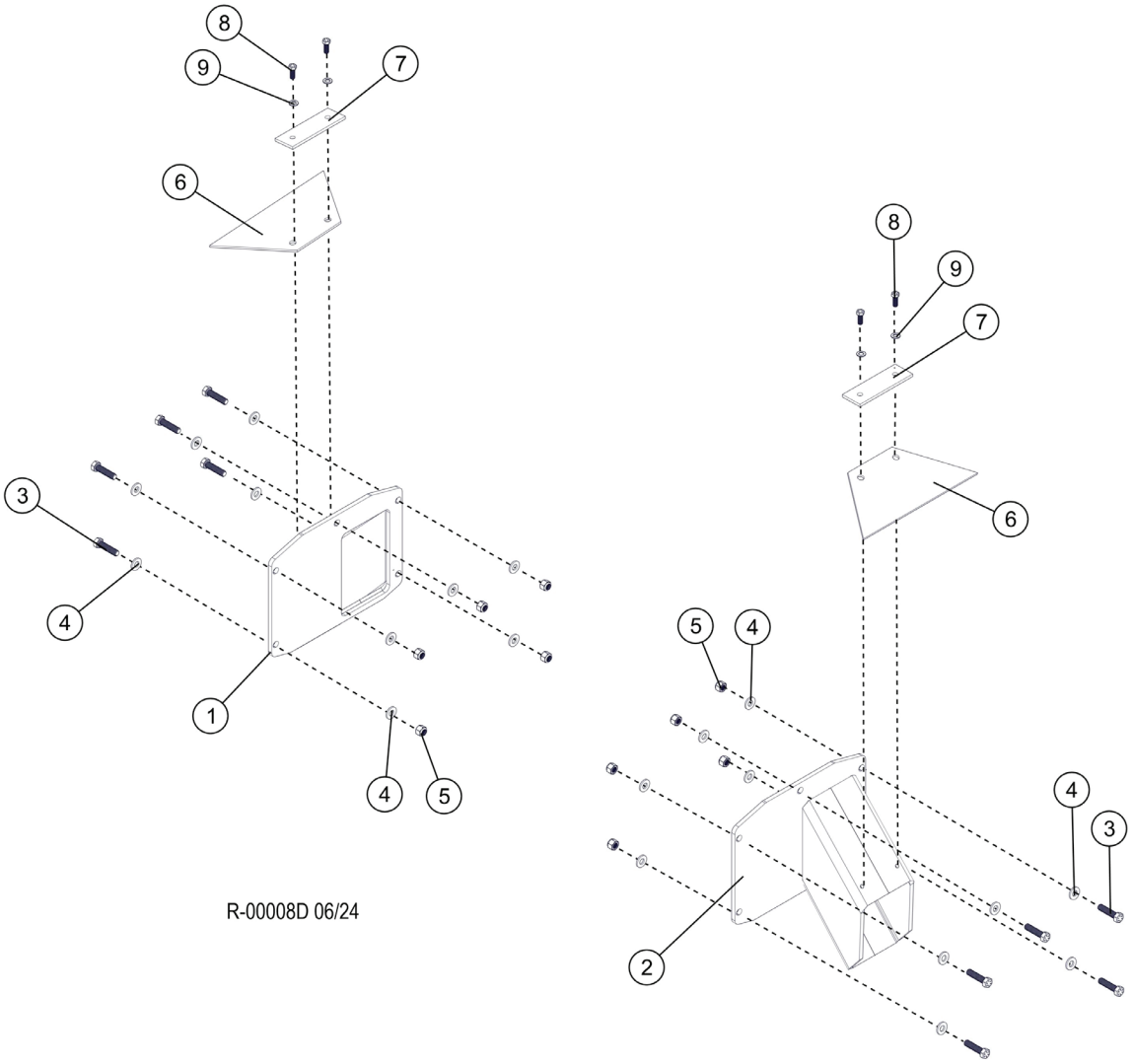


| Item | Part # | Description | Qty. |
|---|---|---|---|
| 1 | 65119 | WELDMENT, TRACK CHUTE 10’4” D7 - LH | 1 |
| 2 | 65120 | WELDMENT, TRACK CHUTE 10’4” D7 - RH | 1 |
| 3 | 10736 | BOLT - .5” X 2” | 1 |
| 4 | 15534 | WASHER, SAE FLAT - .5” | 10 |
| 5 | 10815 | NUT, LOCK - .5” | 20 |
| 6 | 53622 | BELTING,  TRACK CHUTE COVER | 10 |
| 7 | 20209 | RETAINER, RUBBER STEP | 2 |
| 8 | 11707 | BOLT - .375” X 1” | 2 |
| 9 | 15528 | WASHER, SAE FLAT - .375” | 4 |
| | | | 4 |

# R100-00640 - TRACK CHUTE U. 11’0/D7 LEVELING

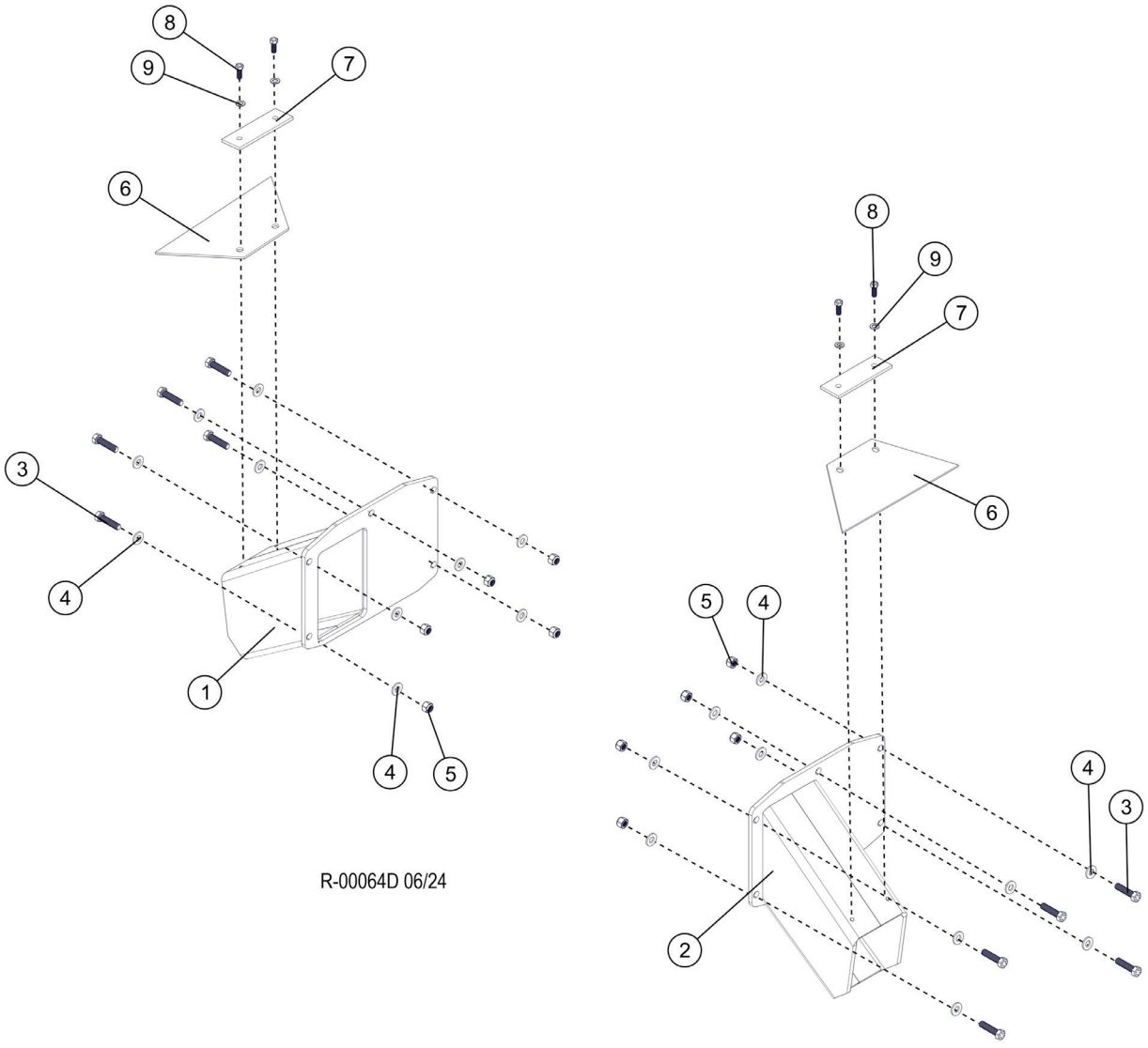


| Item | Part # | Description | Qty. |
|---|---|---|---|
| 1 | 65036 | WELDMENT, TRACK CHUTE-11’0” D7 - LH | 1 |
| 2 | 65035 | WELDMENT, TRACK CHUTE-11’0” D7 - RH | 1 |
| 3 | 10736 | BOLT - .5” X 2” | 10 |
| 4 | 15534 | WASHER, SAE FLAT - .5” | 20 |
| 5 | 10815 | NUT, LOCK - .5” | 10 |
| 6 | 53622 | BELTING,  TRACK CHUTE COVER | 2 |
| 7 | 20209 | RETAINER, RUBBER STEP | 2 |
| 8 | 11707 | BOLT - .375” X 1” | 4 |
| 9 | 15528 | WASHER, SAE FLAT - .375” | 4 |

# R100-00650 - TRACK CHUTE U. 3M/D7 LEVELING

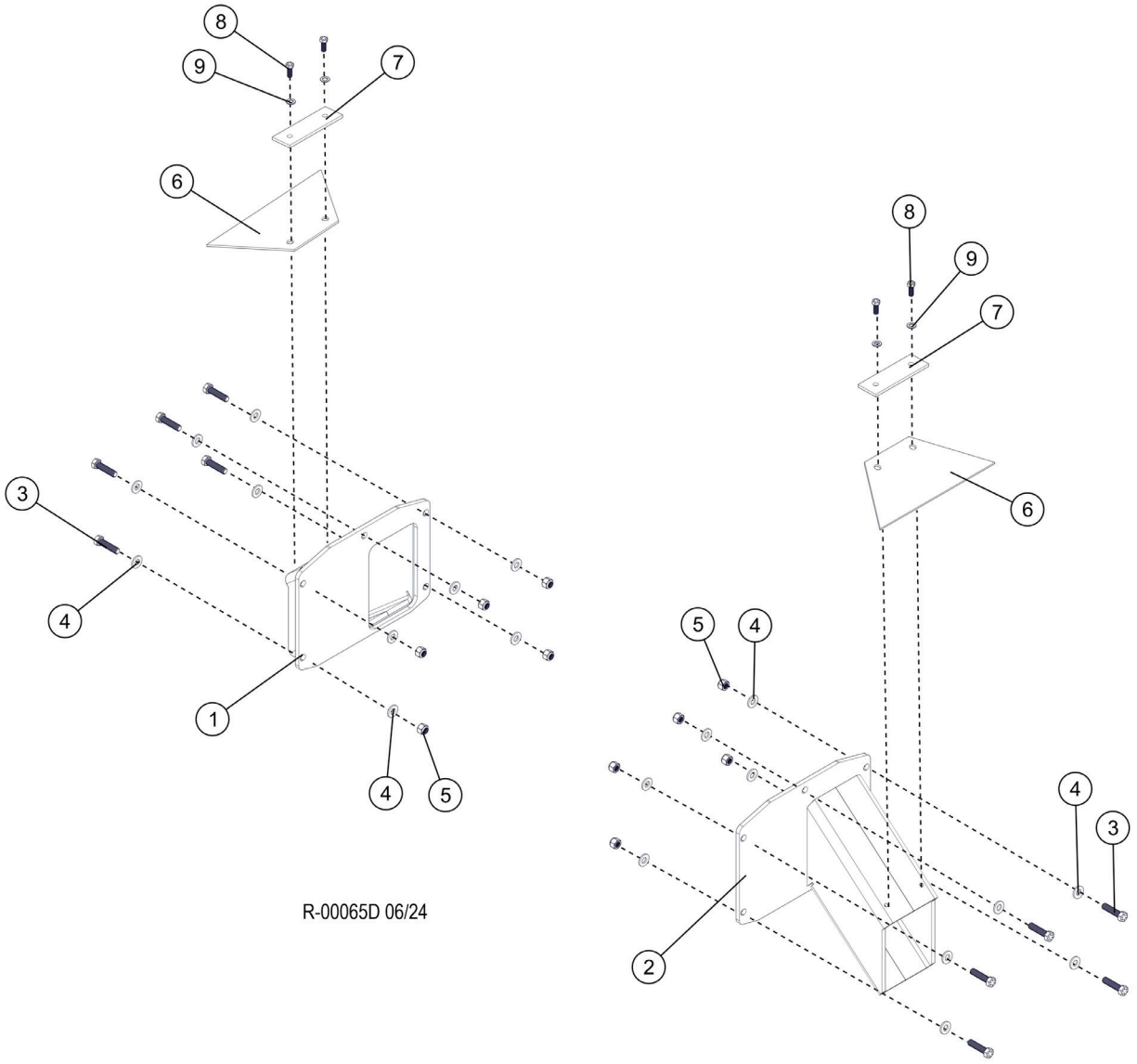


| Item | Part # | Description | Qty. |
|---|---|---|---|
| 1 | 65501 | WELDMENT, TRACK CHUTE, 3M D7 - LH | 1 |
| 2 | 65502 | WELDMENT, TRACK CHUTE, 3M D7 - RH | 1 |
| 3 | 10736 | BOLT - .5” X 2” | 10 |
| 4 | 15534 | WASHER, SAE FLAT - .5” | 20 |
| 5 | 10815 | NUT, LOCK - .5” | 10 |
| 6 | 53622 | BELTING, TRACK CHUTE COVER | 2 |
| 7 | 20209 | RETAINER, RUBBER STEP | 2 |
| 8 | 11707 | BOLT - .375” X 1” | 4 |
| 9 | 15528 | WASHER, SAE FLAT - .375” | 4 |

# R100-00660 - TRACK CHUTE U. 10’6” D7 LEVELING

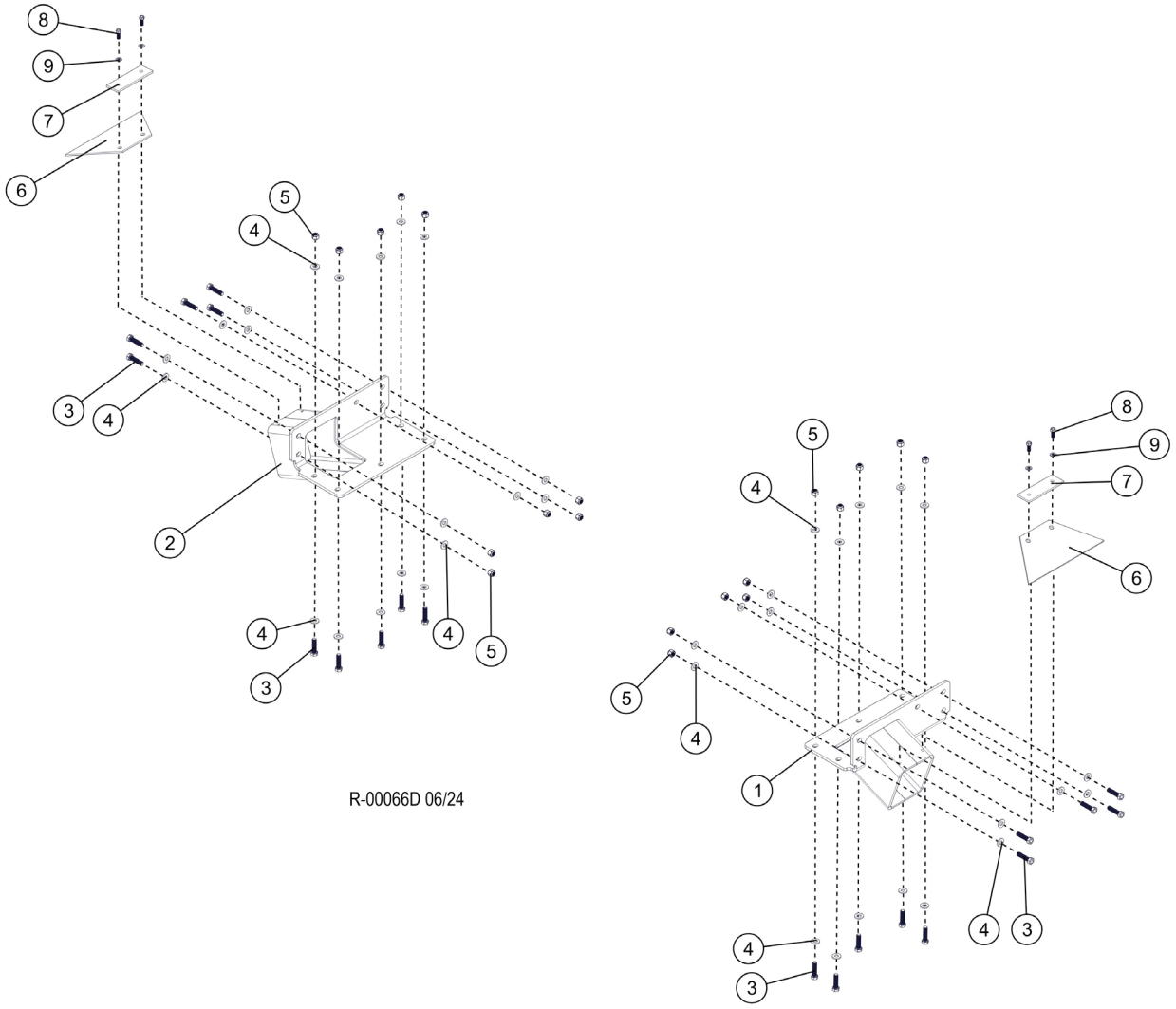


| Item | Part # | Description | Qty. |
|---|---|---|---|
| 1 | 60964 | WELDMENT, D7 TRACK CHUTE 10’6” - LH | 1 |
| 2 | 60967 | WELDMENT, D7 TRACK CHUTE 10’6” - RH | 1 |
| 3 | 10736 | BOLT - .5” X 2” | 20 |
| 4 | 15534 | WASHER, SAE FLAT - .5” | 40 |
| 5 | 10815 | NUT, LOCK - .5” | 20 |
| 6 | 53622 | BELTING, TRACK CHUTE COVER | 2 |
| 7 | 20209 | RETAINER, RUBBER STEP | 2 |
| 8 | 11707 | BOLT - .375” X 1” | 4 |
| 9 | 15528 | WASHER, SAE FLAT - .375” | 4 |

# R100-00670 - LEVELING COMPONENTS

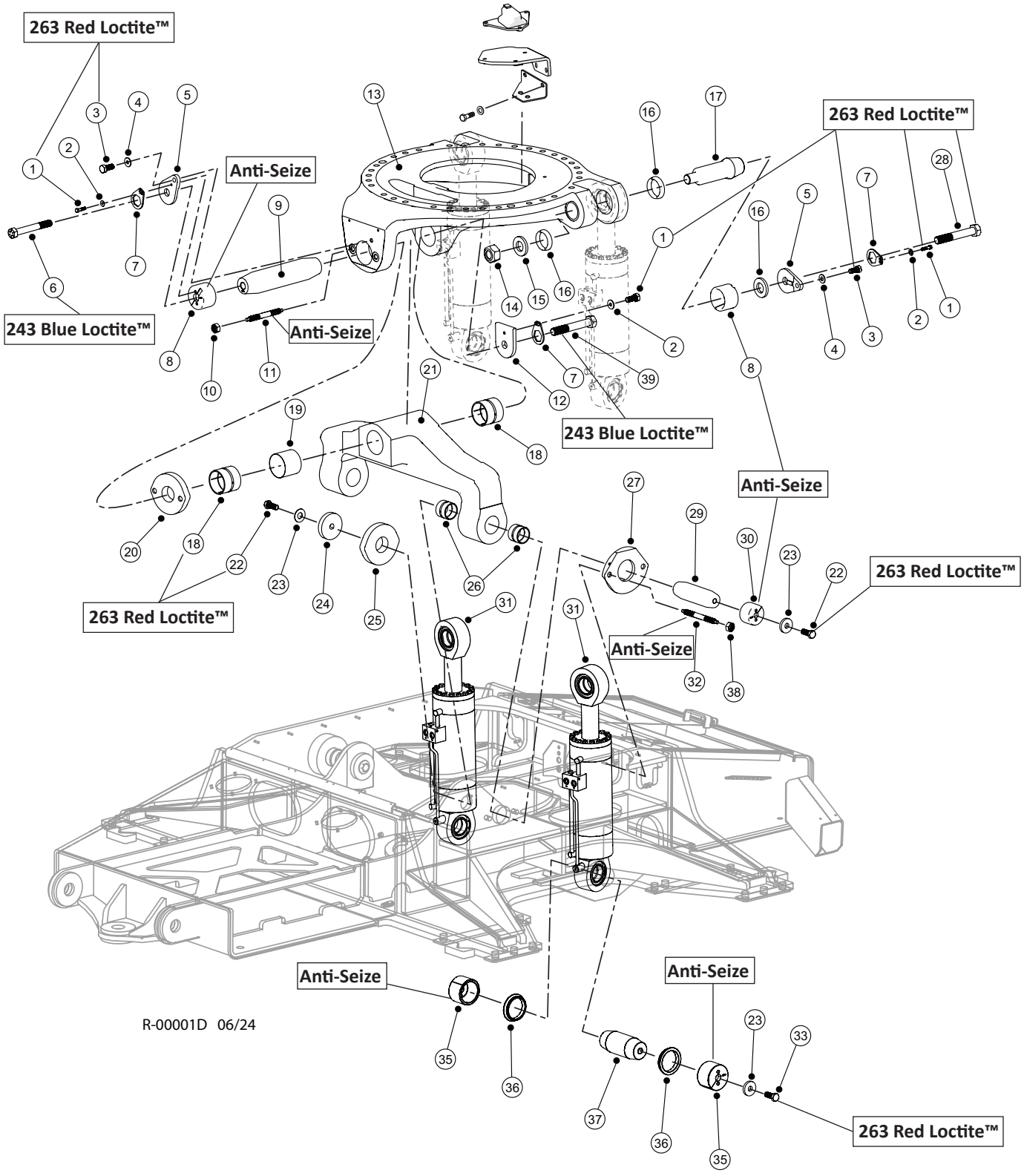

# R100-00670 - LEVELING COMPONENTS

| Item | Part # | Description | Qty. |
|---|---|---|---|
| 1 | 10783 | BOLT - .5” X 1” **263 RED LOCTITE™** | 4 |
| 2 | 15534 | WASHER, SAE FLAT - .5” | 4 |
| 3 | 15549 | BOLT - .75” X 2.0 **263 RED LOCTITE™** | 3 |
| 4 | 15550 | WASHER, SAE FLAT - .75” | 3 |
| 5 | 43742 | EAR, PIN LOCK BASE | 3 |
| 6 | 57976 | BOLT - 1.5”-12 UNF X 3.0” **243 BLUE LOCTITE™** | 1 |
| 7 | 43740 | PIN LOCK, 2.25 HEX | 4 |
| 8 | 52559 | HUB TAPER - 4.50” X 10 DEG **ANTI-SEIZE** | 2 |
| 9 | 53853 | PIN - 4.5” X 19.62” DBL TAPERED THD. +3” | 1 |
| 10 | 15671 | NUT, JAM - 1” | 2 |
| 11 | 53714 | SCREW, SET - 1” X 4.38” CHAMFERED END **ANTI-SEIZE** | 2 |
| 12 | 43741 | EAR, .75 THICK | 1 |
| 13 | 60075 | CASTING, MACHINED LOWER TURNTABLE | 1 |
| 14 | 10728 | NUT, NYLOCK - 2” (ZINC PLATED) | 2 |
| 15 | 12021 | WASHER, BURNED | 2 |
| 16 | 46682 | SPACER, 3.50” X 1.00” - LEVEL CYL. | 2 |
| 17 | 46681 | PIN, PIVOT 3.50” X 11.0” - LEVEL CYL. | 2 |
| 18 | 52523 | BUSHING - 5.0” X 4.5” X 4.25” **263 RED LOCTITE™** | 2 |
| 19 | 54532 | SPACER, BUSHING - LEVELING YOKE T/M | 1 |
| 20 | 52589 | PLATE, SLACK ADJUSTMENT FRONT | 1 |
| 21 | 48170 | CASTING, YOKE SUB ASSY | 1 |
| 22 | 10733 | BOLT - 1” X 3” **263 RED LOCTITE™** | 4 |
| 23 | 52638 | WASHER, BURNED - 1 1/16” X 3” X 1/2” | 6 |
| 24 | 53764 | WASHER, BURNED - 1.0” X 5.5” x 1 | 2 |
| 25 | 57545 | NUT, JAM - 1.25” - 7 | 2 |
| 26 | 48167 | BUSHING, 4.00” OD X 3.50” ID X 3.0” L | 4 |
| 27 | 48159 | PLATE, SLACK ADJUSTER | 1 |
| 28 | 54531 | BOLT - 1.5-6NC” X 2.5” - LEVELING PIN **263 RED LOCTITE™** | 2 |
| 29 | 48194 | PIN, 3.50” X 11.44” DOUBLE TAPER 10 DEG. | 2 |
| 30 | 48157 | HUB, TAPER 3.5” - 10 DEG. **ANTI-SEIZE** | 6 |
| 31 | 57646 | CYLINDER, LEVELING | 2 |
| 32 | 48423 | SCREW, SLACK ADJUSTING **ANTI-SEIZE** | 2 |
| 33 | 15552 | BOLT - 1” X 2.5” **263 RED LOCTITE™** | 4 |
| 34 | 21671 | ELBOW, 45 - 5546134 | 2 |
| 35 | 48157 | HUB, TAPER 3.5" - 10 DEG. | 1 |
| 36 | 48160 | SPACER, 3.50” X .875” - LEVEL CYL. | 4 |
| 37 | 48156 | PIN, 3.50” X 8.38” DOUBLE TAPER 10DEG. | 2 |
| 38 | 43118 | PLATE, DISC 1.75” THICK | 1 |
| 39 | 57975 | BOLT - 1.5" - 12 UNF X 2.5" LEVELING **243 BLUE LOCTITE™ 243 BLUE LOCTITE™** | 1 |
| * | 58341 | KIT, PIN LEVLING CARBODY 725-35-45-55 | 1 |
| * | 58354 | KIT,PINS & BUSHINGS LEVELING INTER PLAT | |

*MEANS NOT SHOWN

# R100-00671 - LEVELING CYLINDER COMPONENTS

**NOTE: APPLY GREASE TO O-RINGS**

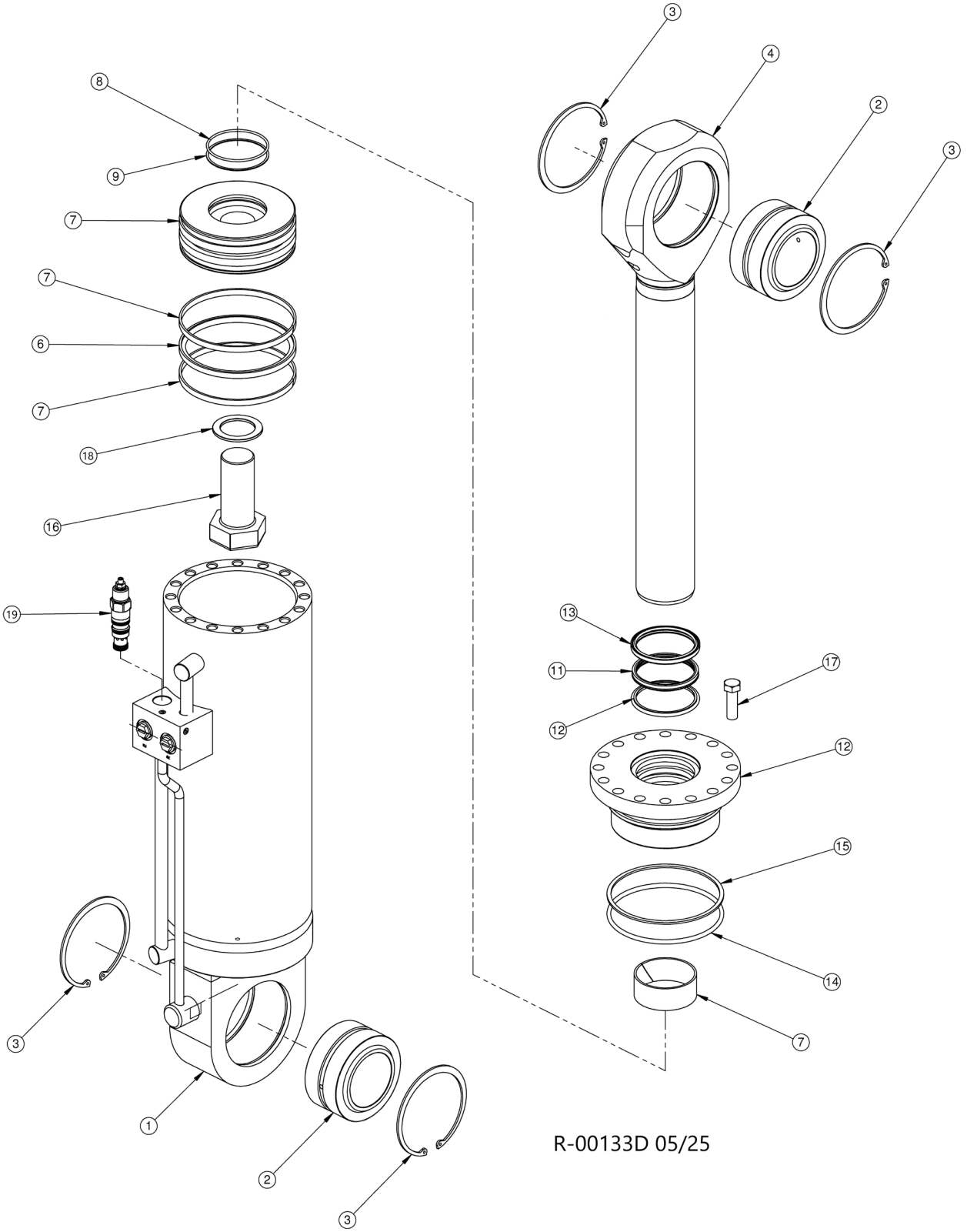


R-00133D 05/25

# R100-00671 - LEVELING CYLINDER COMPONENTS

| Item | Part # | Description | Qty. |
|---|---|---|---|
| | 57646 | CYLINDER, LEVELING - TL755/745/735/725 | 2 |
| 1 | 204100B | BARREL ASSEMBLY | 1 |
| 2 | 720091A | 3.50 SPHERICAL BEARING | 2 |
| 3 | 716030A | 5.50” SNAP RING | 4 |
| 4 | 318243B | ROD ASSEMBLY | 1 |
| 5 | 411479B | PISTON | 1 |
| 6 | 700278A | PISTON SEAL | 1 |
| 7 | 721RH035001500 | WEAR RING,ROD | 3 |
| 8 | 703238A | O-RING,-238,NITRILE,70A | 1 |
| 9 | 704238A | BACKUP RING,-238,HYTREL | 1 |
| 10 | 511491B | ROD BEARING | 1 |
| 11 | 701199A | ROD SEAL | 1 |
| 12 | 706118A | BUFFER SEAL | 1 |
| 13 | 702180A | CANNED WIPER | 1 |
| 14 | 703439A | O-RING,-439,NITRILE,70A | 1 |
| 15 | 704439A | BACKUP RING,-439,HYTREL | 1 |
| 16 | 711181A | CAP SCREW (2.00-12 UNF) | 1 |
| 17 | 711034A | .625-11 CAP SCREW | 16 |
| 18 | 718032A | WASHER | 1 |
| 19 | 725365A | C’BAL,VBST-12U-RS@5000,T-2A | 2 |

# WORK EQUIPMENT - (T)

# T100-00010 - MAIN BOOM - FELLER BUNCHER

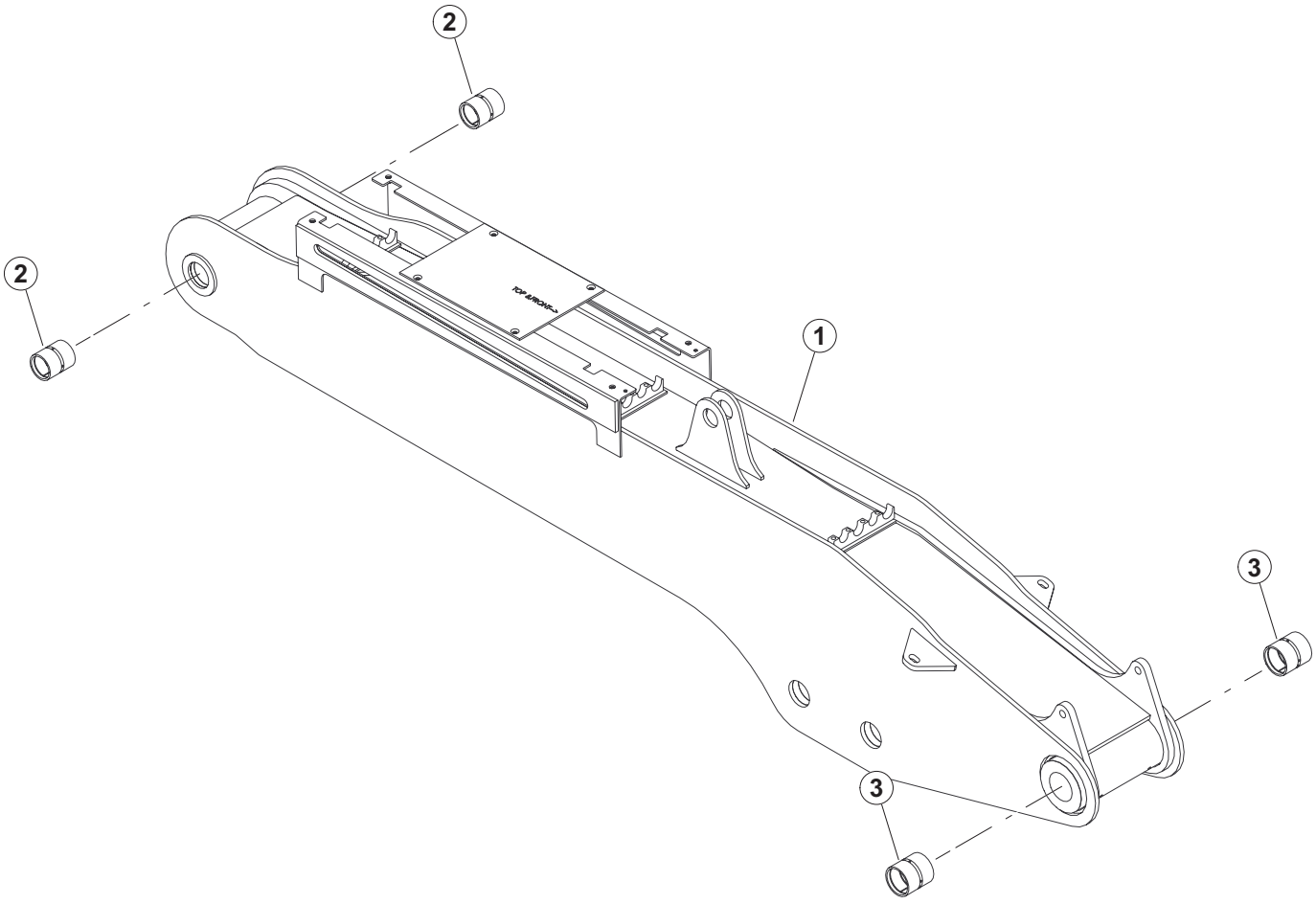


T-00001D 06/24

| Item | Part # | Description | Qty. |
|---|---|---|---|
| 1 | 60291-AST | WELDMENT, MAIN BOOM | 1 |
| 2 | 42485 | BUSHING - 3.5” X 3” X 4.25” UNDERSIZE | 2 |
| 3 | 18564 | BUSHING - 3.5” X 4.25” - UNDERSIZE | 2 |

# T100-00020 - BOOM GUARDING - FELLER BUNCHER

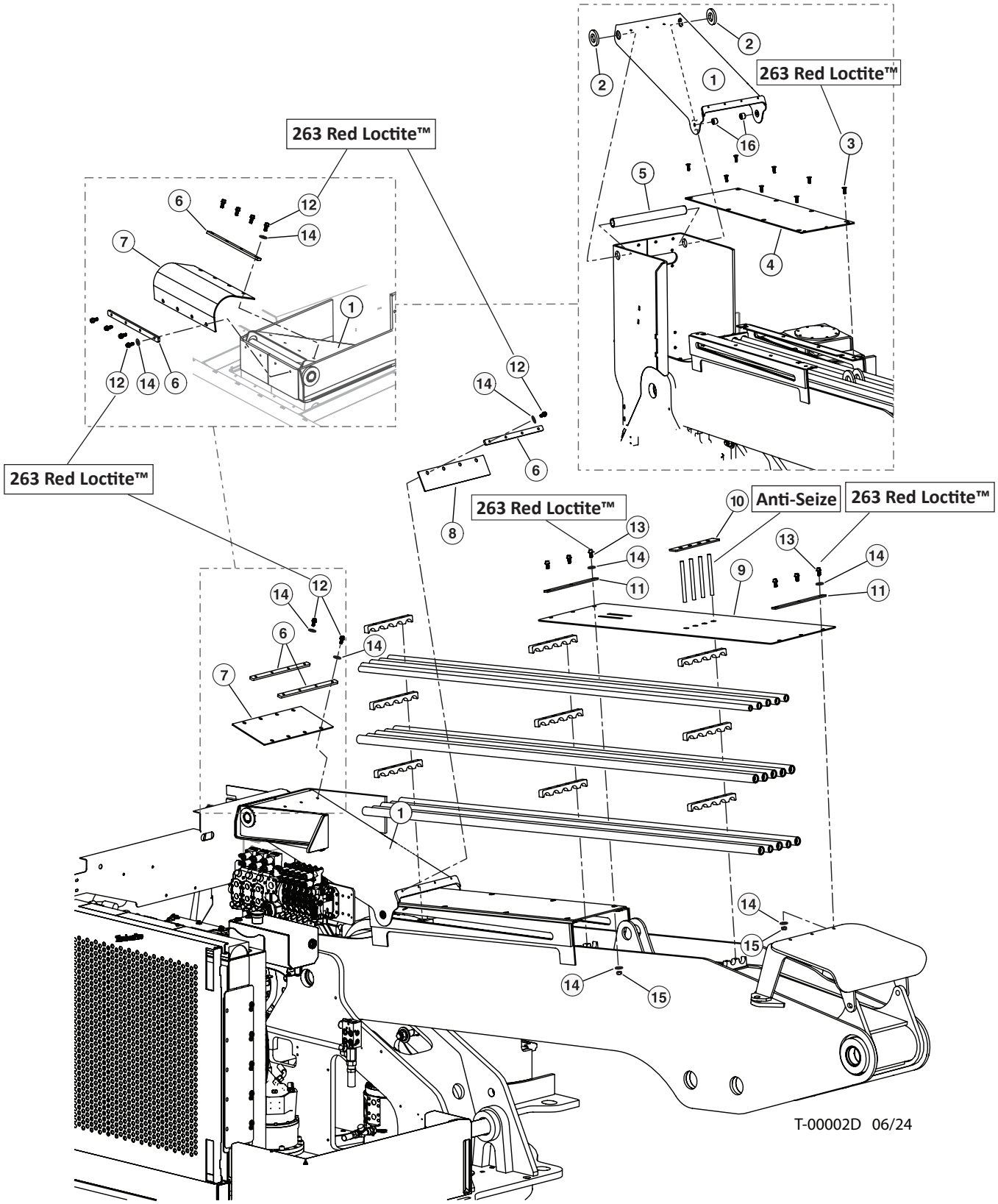

# T100-00020 - BOOM GUARDING - FELLER BUNCHER

| Item | Part # | Description | Qty. |
|---|---|---|---|
| 1 | 60265 | LID, DEBRIS GUARD - D-SERIES | 1 |
| 2 | 60347 | PUCK, DEBRIS GUARD SLIDE | 2 |
| 3 | 62036 | BOLT, FLAT HEAD -.5” X 1” DEBRIS GUARD **263 RED LOCTITE™** | 10 |
| 4 | 60289 | PLATE, DEBRIS WEAR | 1 |
| 5 | 60348 | SHAFT, DEBRIS GUARD | 1 |
| 6 | 60349 | PLATE, RUBBER HOLD DOWN CHIMNEY | 3 |
| 7 | 60478 | RUBBER, REAR DEBRIS GUARD | 1 |
| 8 | 60479 | RUBBER, DEBRIS GUARD SCRAPPER | 1 |
| 9 | 60466 | BELTING, FB BOOM COVER D-SERIES | 1 |
| 10 | 52824 | PLATE, BELTING HOLD DOWN - BOOM COVER | 1 |
| 11 | 42689 | BAR, RUBBER RETAINER - BOOM | 2 |
| 12 | 10402 | BOLT - .375” X 1.25” **263 RED LOCTITE™** | 12 |
| 13 | 10731 | BOLT - .375” X 1.5” **263 RED LOCTITE™** | 6 |
| 14 | 15528 | WASHER, .375” | 24 |
| 15 | 10813 | 3/8-16 NUT, TOP LOCK | 6 |
| 16 | 60347 | PUCK, DEBRIS GUARD SLIDE | 2 |

# T100-00030 - MAIN BOOM INSTALLATION - FELLER BUNCHER

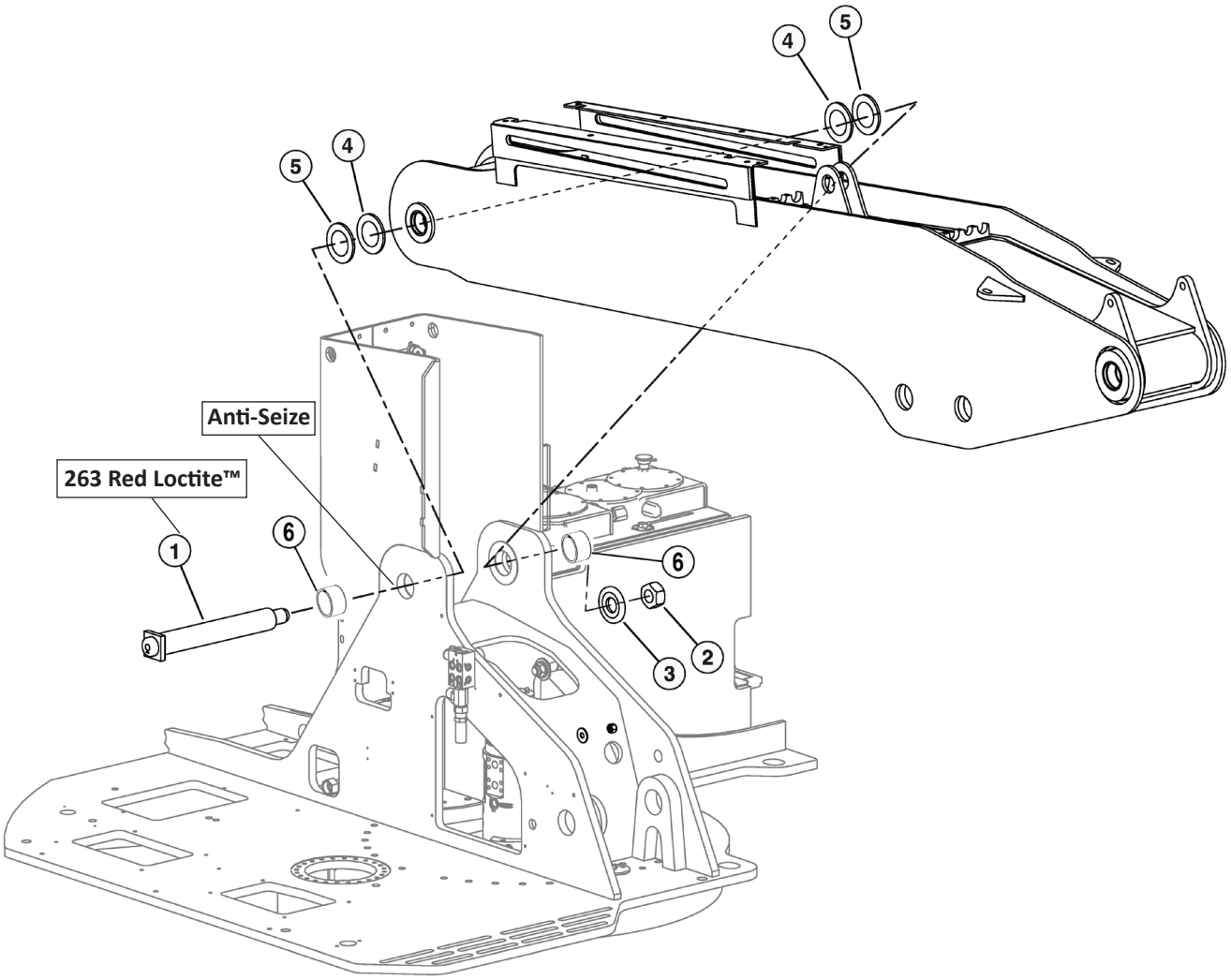


T-00004D 06/24

| Item | Part # | Description | Qty. |
|---|---|---|---|
| 1 | 54679 | PIN ASSEMBLY, 2.99 DIA X 24.63” **263 RED LOCTITE™** | 1 |
| 2 | 10728 | NUT, NYLOCK - 2” (ZINC PLATED) | 1 |
| 3 | 60758 | WASHER, BURNED - HARDENED-MAIN BOOM PIN | 1 |
| 4 | 47260 | SHIM, BOOM PIVOT - .059 | AR |
| 5 | 47261 | SHIM, BOOM PIVOT - .047 | AR |
| * | 687400 | SHIM - 3.75"ID X 5.94"OD X .075"THK | AR |
| 6 | 42484 | BUSHING - 3.5” X 3.0” X 2.0” UNDERSIZE **ANTI-SEIZE** | 2 |

# T100-00040 - MAIN BOOM - HARVESTOR

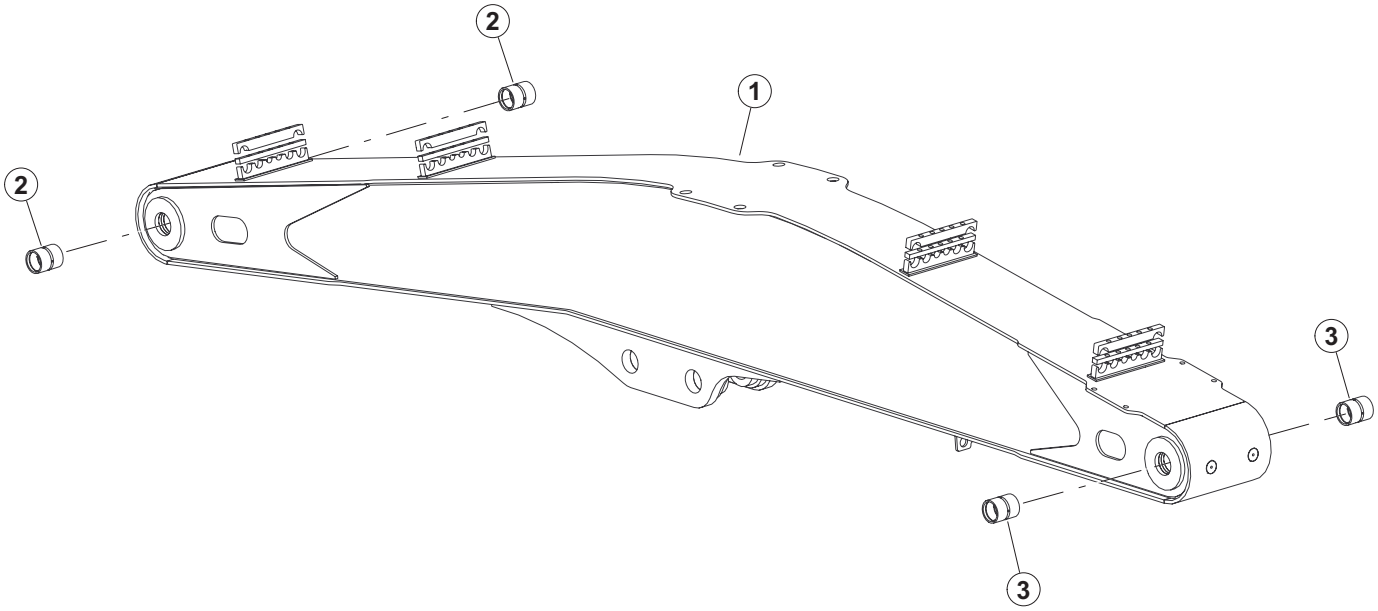


H-00007D 06/24

| Item | Part # | Description | Qty. |
|---|---|---|---|
| 1 | 47795 | WELDMENT, MAIN BOOM HARVESTOR | 1 |
| 2 | 42485 | BUSHING - 3.5” X 3” X 4.25” UNDERSIZE | 2 |
| 3 | 18564 | BUSHING - 3.5” X 4.25” - UNDERSIZE | 2 |

# T1110-2239200 - MAIN BOOM - HARVESTOR - (4.00” BUSHING BORES)

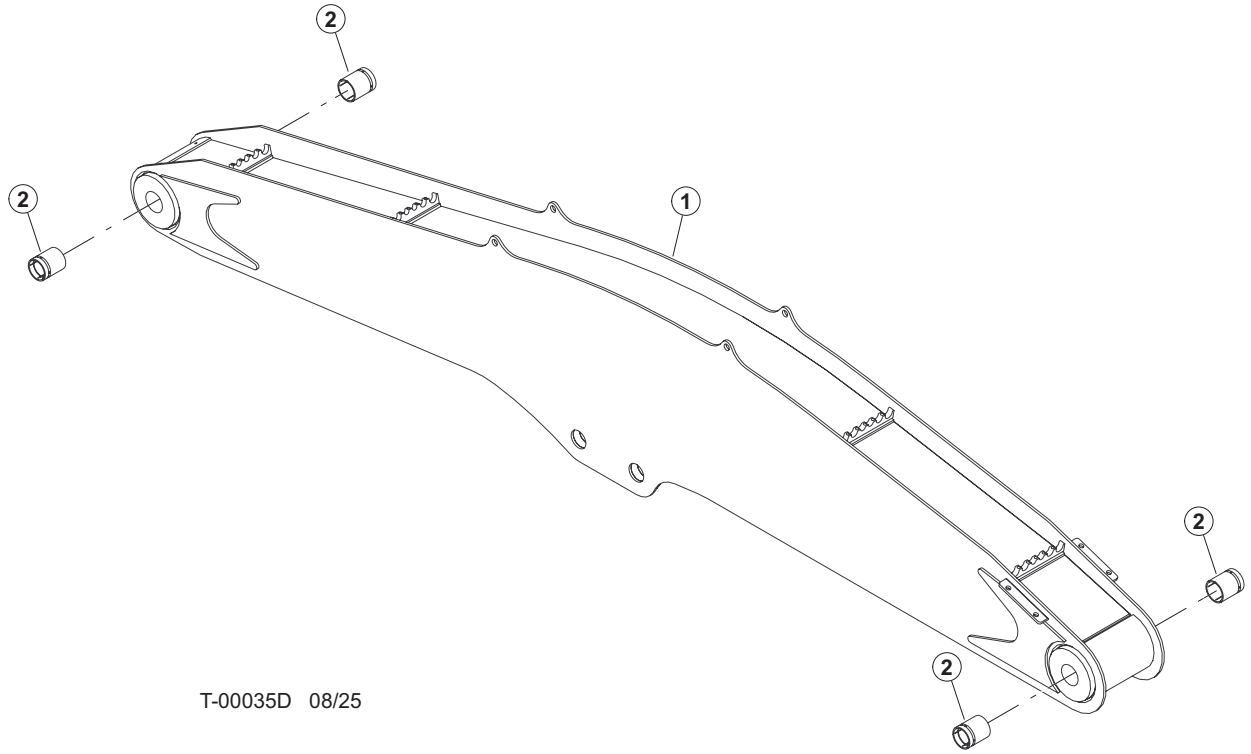


| Item | Part # | Description | Qty. |
|---|---|---|---|
| 1 | 617300 | WELD, MAIN BOOM, HARV (745/755) | 1 |
| 2 | 60824 | BUSHING, 4.00 OD X 3.50 ID X 4.75 LG | 4 |

# T100-00050 - MAIN BOOM BOOM GUARDING - HARVESTOR

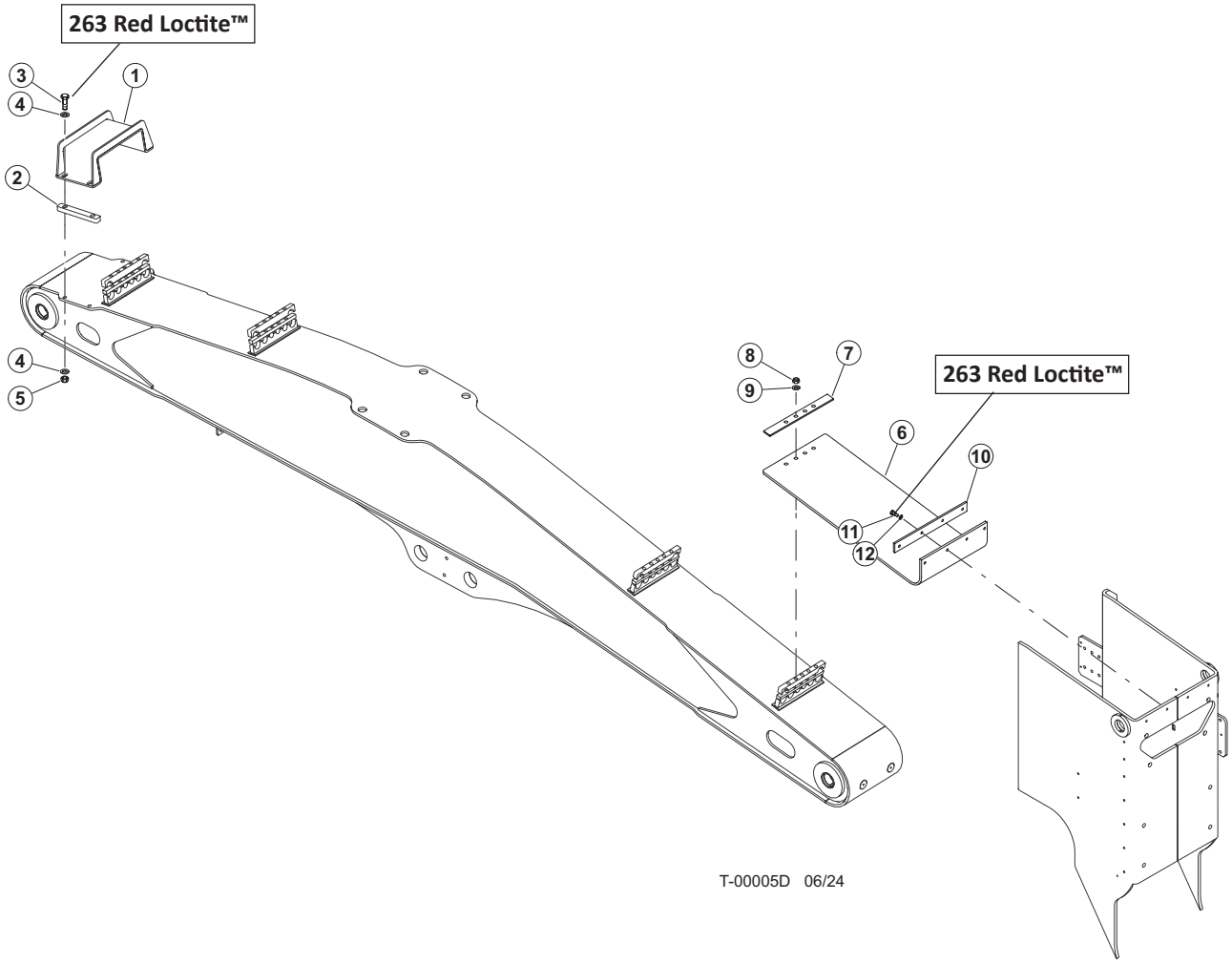


| Item | Part # | Description | Qty. |
|---|---|---|---|
| 1 | 60729 | GUARD, HOSE - HARVESTOR MAIN BOOM | 1 |
| 2 | 65671 | BAR, HARVESTER COVER MOUNT SPACER | 2 |
| 3 | 15549 | BOLT - .75” X 2.0” **263 RED LOCTITE™** | 4 |
| 4 | 10806 | WASHER, FLAT - .75” | 8 |
| 5 | 10817 | NUT, 3/4-10 UNC | 4 |
| 6 | 58062 | RUBBER, WHEELED BOOM COVER D | 1 |
| 7 | 52824 | PLATE, BELTING HOLD DOWN - BOOM COVER | 1 |
| 8 | 15563 | NUT, NYLOCK - .625” | 4 |
| 9 | 10771 | WASHER, SAE FLAT - .625” | 4 |
| 10 | 60349 | PLATE, RUBBER HOLD DOWN CHIMNEY | 1 |
| 11 | 10402 | BOLT - .375” X 1.25” **263 RED LOCTITE™** | 4 |
| 12 | 10802 | WASHER, FLAT - .375” | 4 |

# T100-00060 - MAIN BOOM BOOM INSTALLATION - HARVESTOR

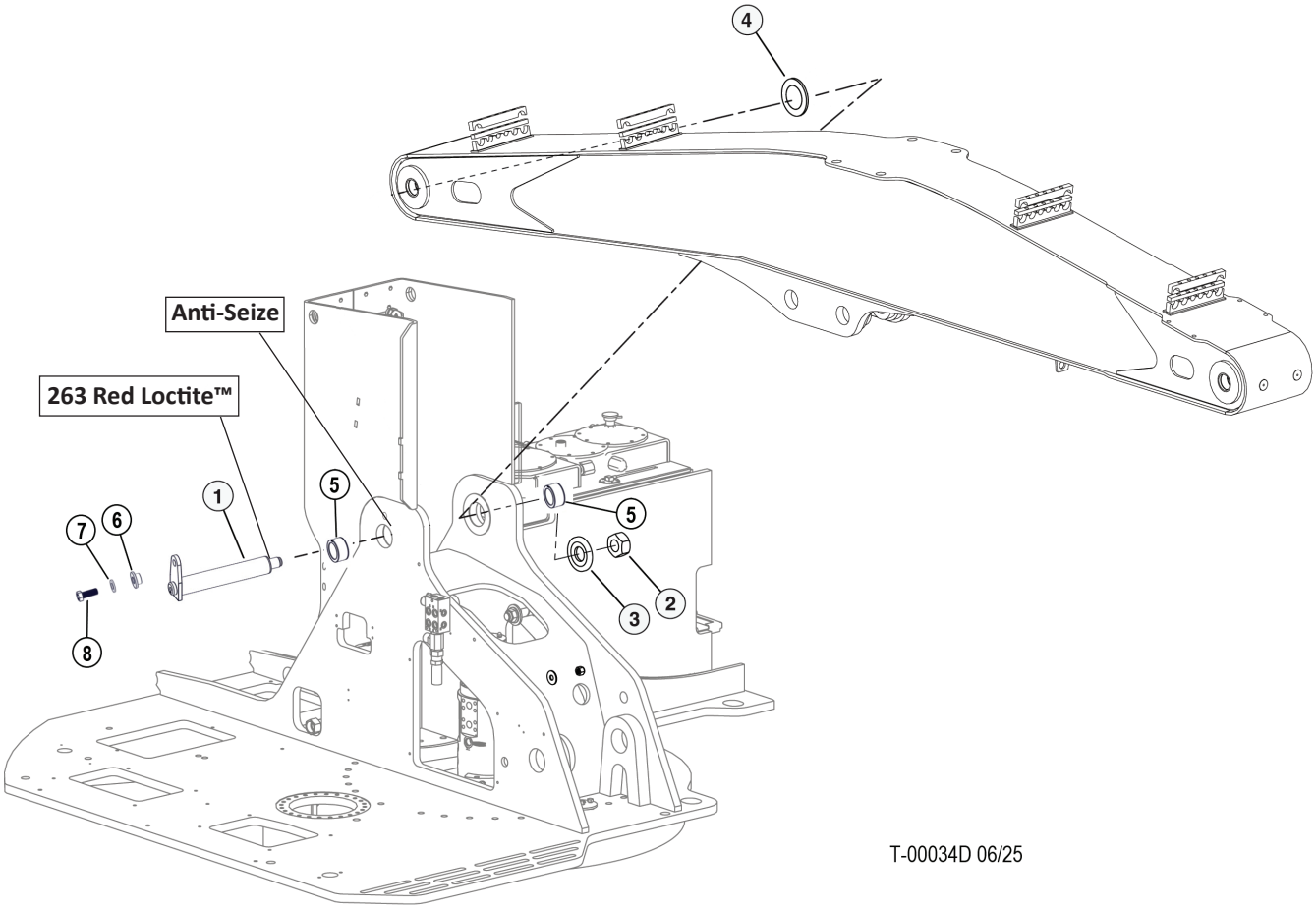


| Item | Part # | Description | Qty. |
|---|---|---|---|
| 1 | 60818 | PIN ASSY, 3.49X20.12-D-SERIES **263 RED LOCTITE™** | 1 |
| 2 | 10728 | NUT, NYLOCK - 2” (ZINC PLATED) | 1 |
| 3 | 60758 | WASHER, BURNED - HARDENED-MAIN BOOM PIN | 1 |
| 4 | 18678 | SHIM - 3.51" ID X 6.00" OD X .179" THK | AR |
| 4 | 18679 | SHIM - 3.51" ID X 6.00" OD X .135" THK | AR |
| 4 | 18680 | SHIM - 3.51" ID X 6.00" OD X .075" THK | AR |
| * | 687400 | SHIM - 3.75"ID X 5.94"OD X .075"THK | AR |
| 5 | 60823 | BUSHING, 4.00 OD X3.50 ID X 2.05 LG | 1 |
| 6 | 18570 | WASHER, PIN RETAINING | 2 |
| 7 | 15550 | WASHER, SAE FLAT - .75" | 1 |
| 8 | 15549 | BOLT - .75" X 2.0 | 1 |

# T100-00070 - MAIN BOOM BOOM CYLINDER - 150MM

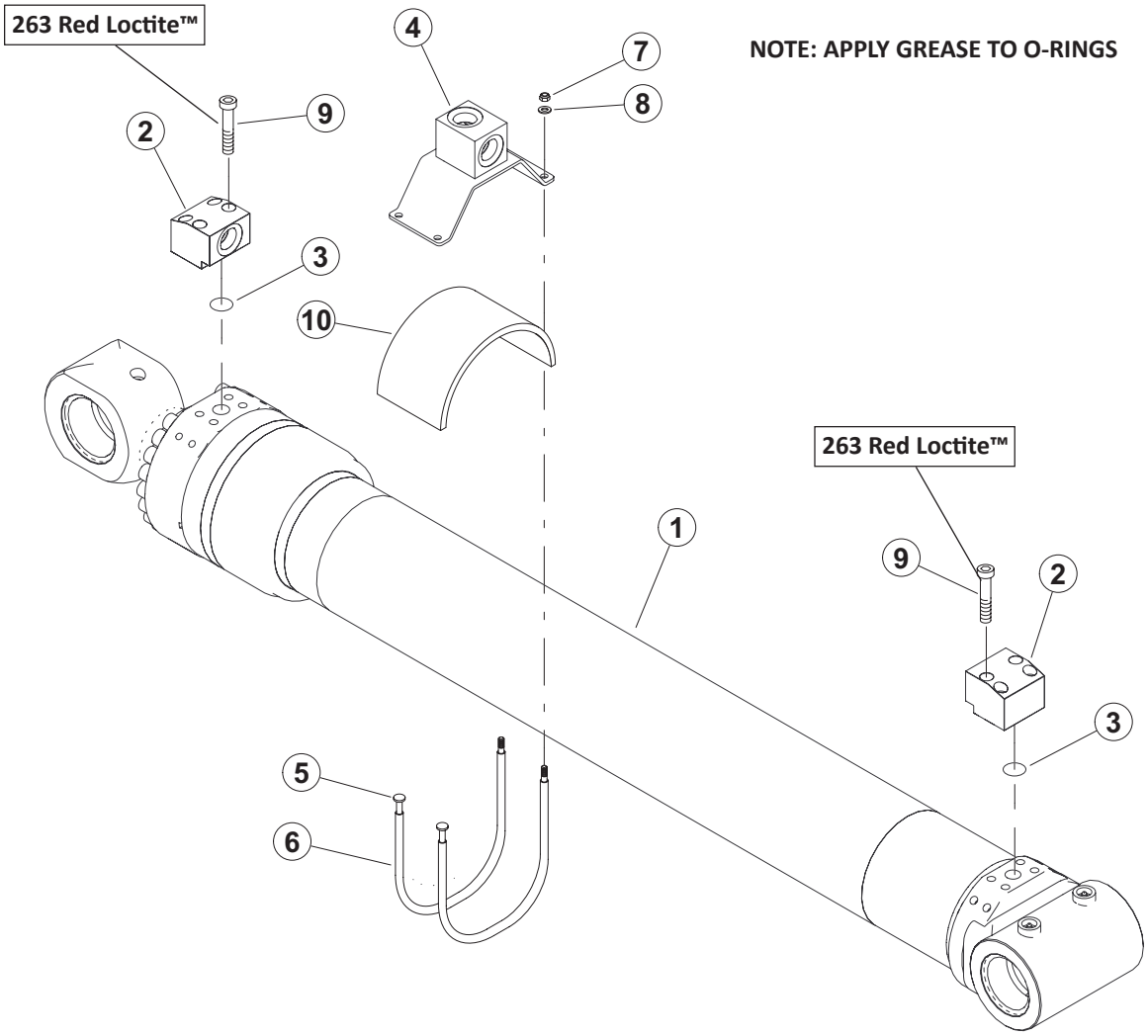


T-00008D 06/24

| Item | Part # | Description | Qty. |
|---|---|---|---|
| 1 | 57839 | CYLINDER, MAIN BOOM - TRACK 150MM | 1 |
| 2 | 57601 | FLANGE, BLOCK ELBOW W184-16-16U CODE 62 | 2 |
| 3 | 15377 | O-RING - 1” SF (CODE 61/62) | 2 |
| 4 | 60435 | WELDMENT, CYL BARREL CLAMP/BLOCK | 1 |
| 5 | 57919 | CABLE, CYLINDER - 17” | 2 |
| 6 | 55411 | 3/8” HEATER HOSE | 2 |
| 7 | 55262 | NUT, NYLON INSERT LOCK, 3/8-24 | 2 |
| 8 | 15528 | WASHER, SAE FLAT - .375” | 2 |
| 9 | 58397 | BOLT, ALLEN HEAD - 12MM X 65MM **263 RED LOCTITE™** | 8 |
| 10 | 60653 | RUBBER, CYL MANIFOLD MOUNT | 1 |

# T100-00070 - MAIN BOOM BOOM CYLINDER COMPONENTS - 150MM

**NOTE: APPLY GREASE TO O-RINGS**

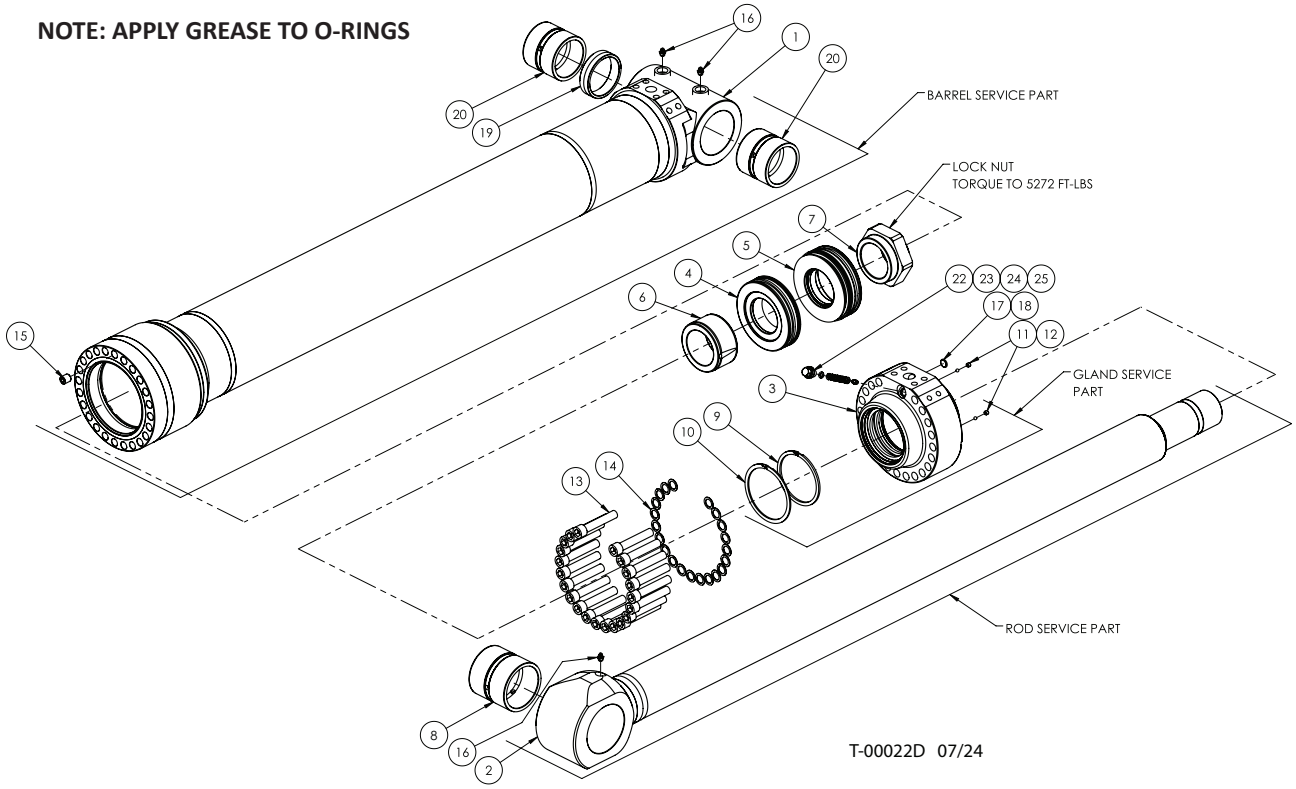


| Item | Part # | Description | Qty. |
|---|---|---|---|
| | 57839 | CYLINDER, MAIN BOOM - TRACK 150MM | 1 |
| 1 | 56156 | BARREL ASSEMBLY | 1 |
| 2 | 56154 | ROD ASSEMBLY | 1 |
| 3 | TIM150108 | GLAND | 1 |
| 4 | TIM150109 | FRONT PISTON | 1 |
| 5 | TIM150110 | BACK PISTON | 1 |
| 6 | TIM150117 | CUSHION SLEEVE | 1 |
| 7 | LNUT M75 | LOCKNUT | 1 |
| 8 | 62066 | BUSHING | 1 |
| 9 | DNH-112 | SPIRAL SNAP RING | 1 |
| 10 | WHM-475 | SPIRAL SNAP RING | 1 |
| 11 | SHSS 05-18-0.250 | SET SCREW | 2 |
| 12 | 62057 | STEEL BALL | 2 |
| 13 | SHCS M16 X 90 | SHCS METRIC | 21 |
| 14 | HD002049 | FLAT WASHER | 21 |
| 15 | SHSS M16 X 16 | SET SCREW | 1 |
| 16 | GREASE 1/8” STR | GREASE FITTING | 3 |
| 17 | TL-C5-190-30 | TEMPERATURE LABEL | 1 |
| 18 | N1470 - 112 | O-RING | 1 |
| 19 | TPM150217 | BUSHING SPACER | 1 |
| 20 | 62067 | BUSHING | 2 |
| 21 | 57853 | SEAL KIT | 1 |
| 22 | HD002308 | PLUG | 1 |
| 23 | 0125755 | DISC SPRING | 1 |
| 24 | 0123995 | DISC SPRING | 8 |
| 25 | HD002306 | HIGH PRESSURE SPOOL | 1 |

# T100-00080 - MAIN BOOM BOOM CYLINDER - 165MM BORE

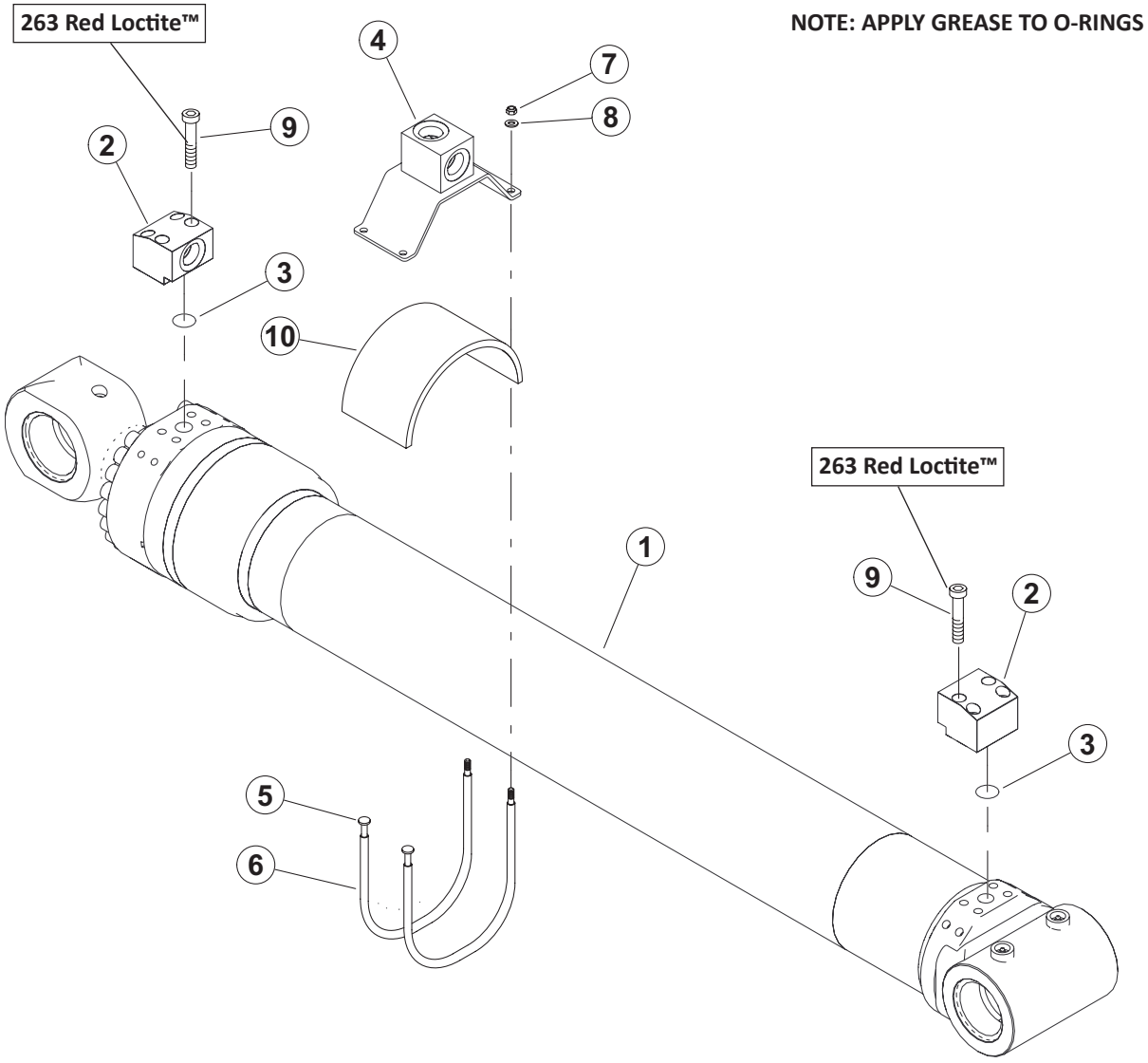


T-00008D 06/24

| Item | Part # | Description | Qty. |
|---|---|---|---|
| 1 | 58202 | CYLINDER, MAIN BOOM - TRACK 165MM | 1 |
| 2 | 57601 | FLANGE, BLOCK ELBOW W184-16-16U CODE 62 | 2 |
| 3 | 15377 | O-RING - 1” SF (CODE 61/62) | 2 |
| 4 | 60435 | WELDMENT, CYL BARREL CLAMP/BLOCK | 1 |
| 5 | 57748 | CABLE, CYLINDER - 19” | 2 |
| 6 | 55411 | 3/8” HEATER HOSE | 2 |
| 7 | 55262 | NUT, NYLON INSERT LOCK, 3/8-24 | 2 |
| 8 | 15528 | WASHER, SAE FLAT - .375” | 2 |
| 9 | 58397 | BOLT, ALLEN HEAD - 12MM X 65MM **263 RED LOCTITE™** | 8 |
| 10 | 60653 | RUBBER, CYL MANIFOLD MOUNT | 1 |

# T100-00081 - MAIN BOOM BOOM CYLINDER COMPONENTS - 165MM

**NOTE: APPLY GREASE TO O-RINGS**

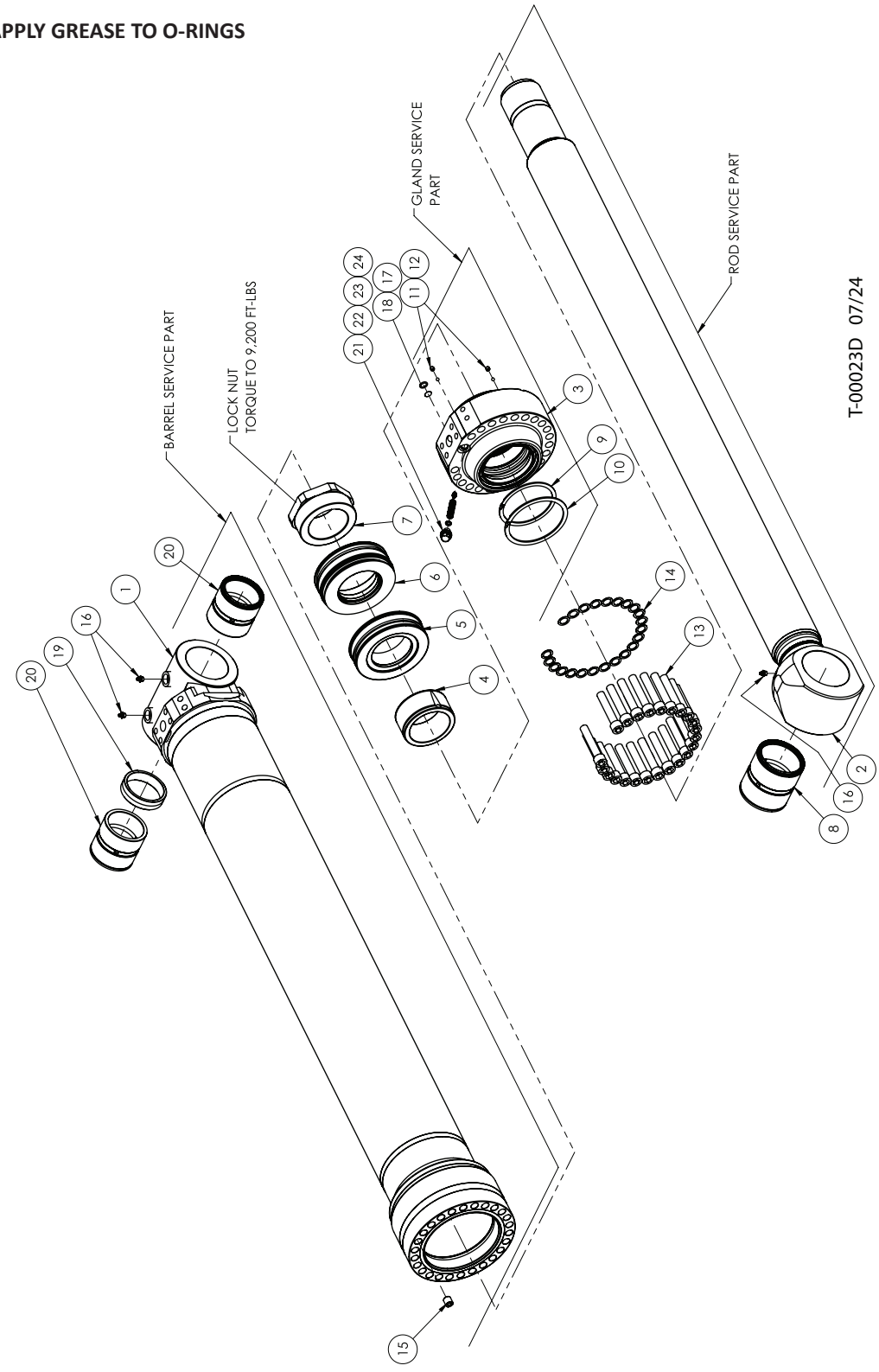

# T100-00081 - MAIN BOOM BOOM CYLINDER COMPONENTS - 165MM

| Item | Part # | Description | Qty. |
|---|---|---|---|
| | 58202 | CYLINDER, MAIN BOOM - TRACK 165MM | 1 |
| 1 | 57056 | BARREL ASSEMBLY | 1 |
| 2 | 57054 | ROD ASSEMBLY | 1 |
| 3 | TPM165108 | GLAND | 1 |
| 4 | TP650117 | CUSHION SLEEVE | 1 |
| 5 | TP650109 | FRONT PISTON | 1 |
| 6 | TP650110 | BACK PISTON | 1 |
| 7 | LNUT M90 | LOCKNUT | 1 |
| 8 | 62066 | BUSHING | 1 |
| 9 | WHM-475 | SPIRAL SNAP RING | 1 |
| 10 | WHM-525 | SPIRAL SNAP RING | 1 |
| 11 | SHSS 05-18-0.250 | SET SCREW | 2 |
| 12 | 62057 | STEEL BALL | 2 |
| 13 | SHCS M16 X 90 | SHCS METRIC | 23 |
| 14 | HD002049 | FLAT WASHER | 23 |
| 15 | SHSS M16 X 16 | SET SCREW | 1 |
| 16 | GREASE 1/8” STR | GREASE FITTING | 3 |
| 17 | TL-C5-190-30 | TEMPERATURE LABEL | 1 |
| 18 | N1470 - 112 | O-RING | 1 |
| 19 | TPM150217 | BUSHING SPACER | 1 |
| 20 | 62067 | BUSHING | 2 |
| 21 | HD002308 | PLUG | 1 |
| 22 | 0125755 | DISC SPRING | 1 |
| 23 | 0123995 | DISC SPRING | 8 |
| 24 | HD002306 | HIGH PRESSURE SPOOL | 1 |
| 25 | 58329 | SEAL KIT | 1 |

# T100-00090 - MAIN BOOM BOOM CYLINDER INSTALLATION - FELLER BUNCHER

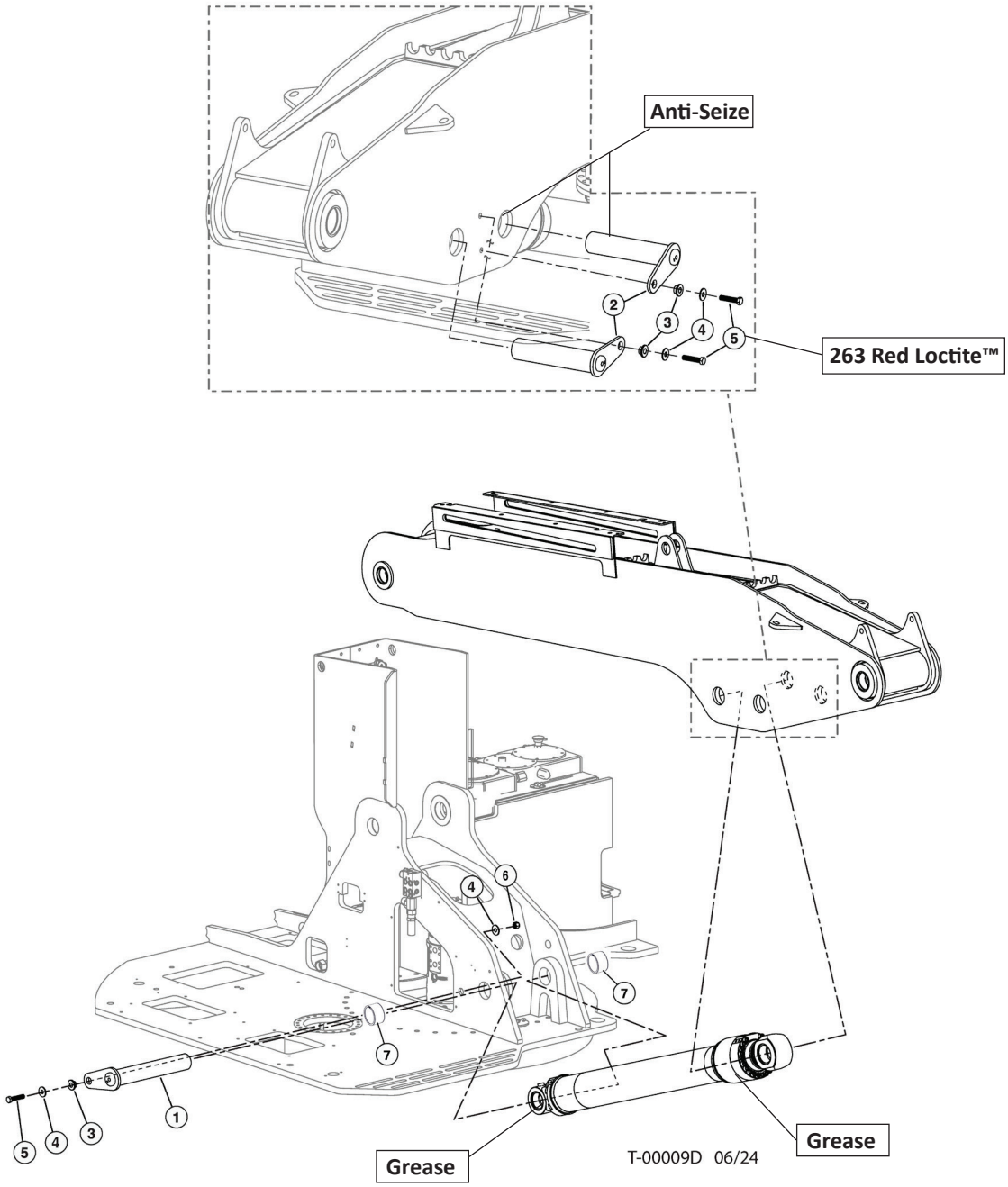


| Item | Part # | Description | Qty. |
|---|---|---|---|
| 1 | 60297 | PIN ASSY, 80MM X 19.00” - BASE MAIN CYL | 1 |
| 2 | 60303 | PIN ASSY, 90MM X 15.5” (ROD MAIN/BASE ST **ANTI-SEIZE** | 2 |
| 3 | 18570 | WASHER, PIN RETAINING | 2 |
| 4 | 15550 | WASHER, SAE FLAT - .75” | 4 |
| 5 | 10841 | BOLT - .75” X 3.5” **263 RED LOCTITE™** | 2 |
| 6 | 10817 | NUT, 3/4-10 UNC | 1 |
| 7 | 60290 | BUSHING, 3.75 X 80MM X 4.75 (D - UPPER) | 2 |

# T100-00100 - MAIN BOOM CYLINDER INSTALLATION - HARVESTOR

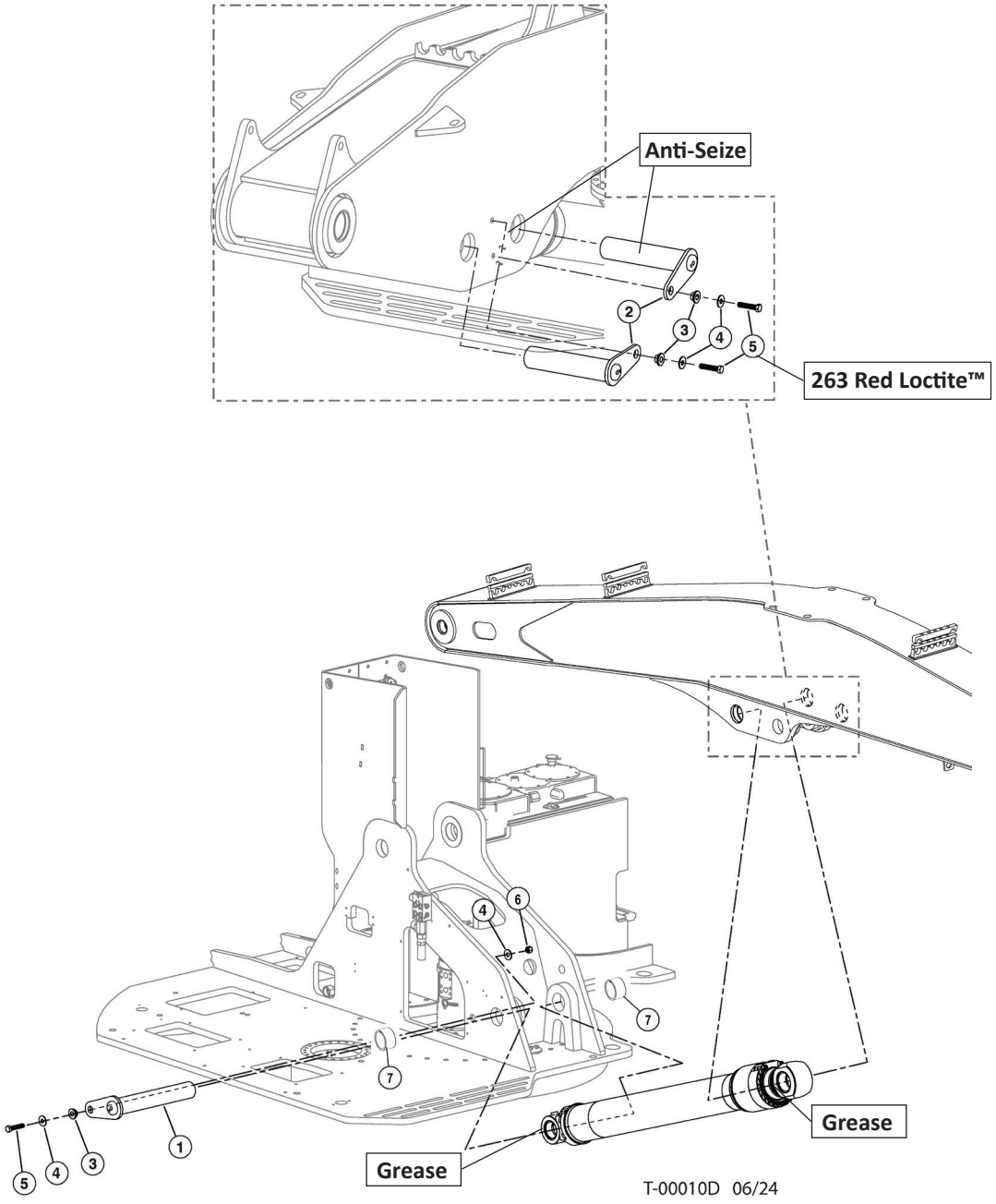


| Item | Part # | Description | Qty. |
|---|---|---|---|
| 1 | 60297 | PIN ASSY, 80MM X 19.00” - BASE MAIN CYL | 1 |
| 2 | 60303 | PIN ASSY, 90MM X 15.5” (ROD MAIN/BASE ST **ANTI-SEIZE** | 2 |
| 3 | 18570 | WASHER, PIN RETAINING | 2 |
| 4 | 15550 | WASHER, SAE FLAT - .75” | 4 |
| 5 | 10841 | BOLT - .75” X 3.5” **263 RED LOCTITE™** | 2 |
| 6 | 10817 | NUT, 3/4-10 UNC | 1 |
| 7 | 60290 | BUSHING, 3.75 X 80MM X 4.75 (D - UPPER) | 2 |

# T100-00110 - STICK BOOM CYLINDER - 130MM BORE

**NOTE: HYDRAULIC FITTINGS GET 545 LOCTITE™**

**NOTE: APPLY GREASE TO O-RINGS**

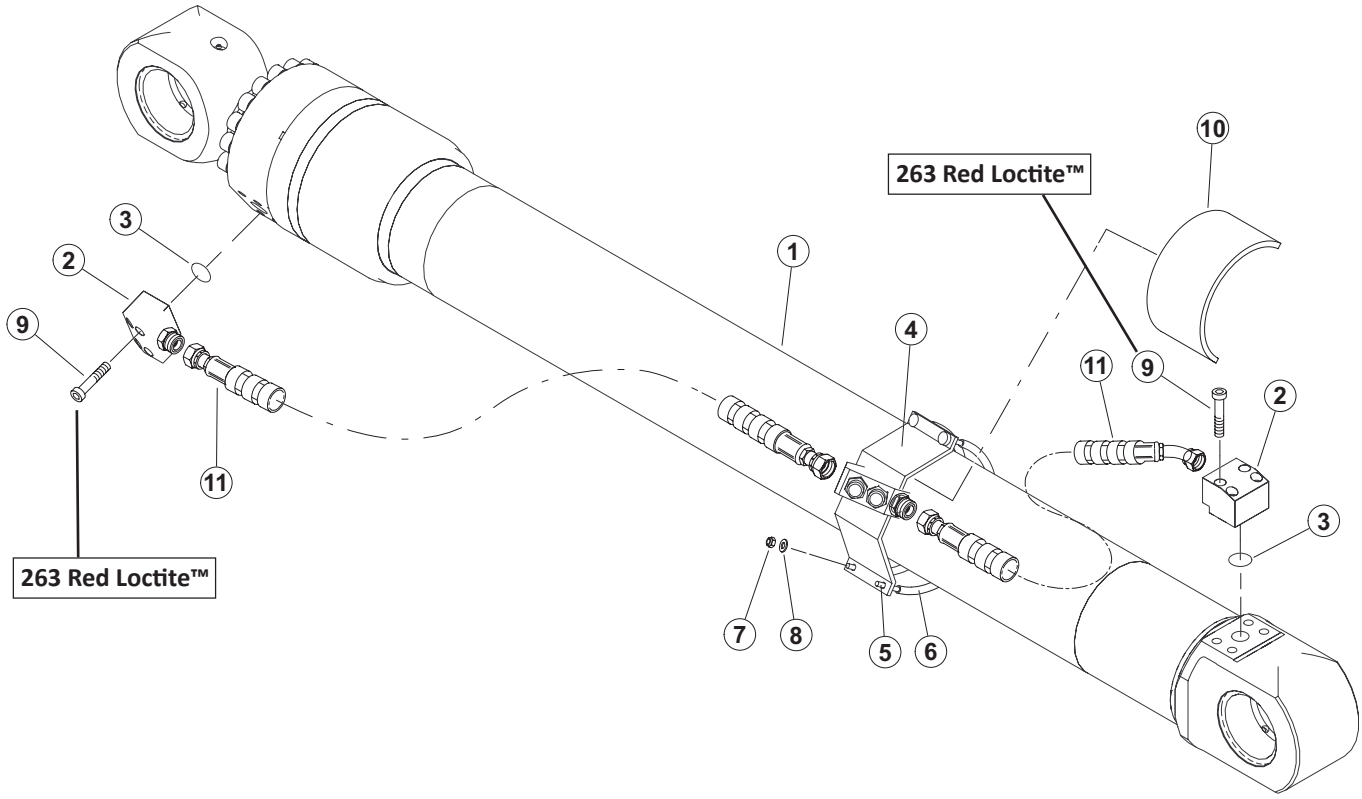


T-00011D 06/24

| Item | Part # | Description | Qty. |
|---|---|---|---|
| 1 | 57837 | CYLINDER, STICK - FB 130mm | 1 |
| 2 | 57601 | FLANGE, BLOCK ELBOW W184-16-16U CODE 62 | 2 |
| 3 | 15377 | O-RING - 1” SF (CODE 61/62) | 2 |
| 4 | 60521 | WELDMENT, CYL STK BARREL 45 DEG | 1 |
| 5 | 58031 | CABLE, CYLINDER, 15” | 2 |
| 6 | 55411 | 3/8” HEATER HOSE | AR |
| 7 | 55262 | NUT, NYLON INSERT LOCK, 3/8-24 | 4 |
| 8 | 15528 | WASHER, SAE FLAT - .375” | 4 |
| 9 | 59149 | BOLT - M12-1.75 X 60 Gr 12.9 SHC **263 RED LOCTITE™** | 8 |
| 10 | 60653 | RUBBER, CYL MANIFOLD MOUNT | 1 |
| 11 | 65855 | HOSE, HYD, 787TC38 16-16OS-16OS-SW | 1 |
| 12 | 65853 | HOSE, HYD, 787TC17 16-16OS-16O4-SW | 1 |

# T100-00111 - STICK BOOM CYLINDER COMPONENTS - 130MM BORE

**NOTE: APPLY GREASE TO O-RINGS**

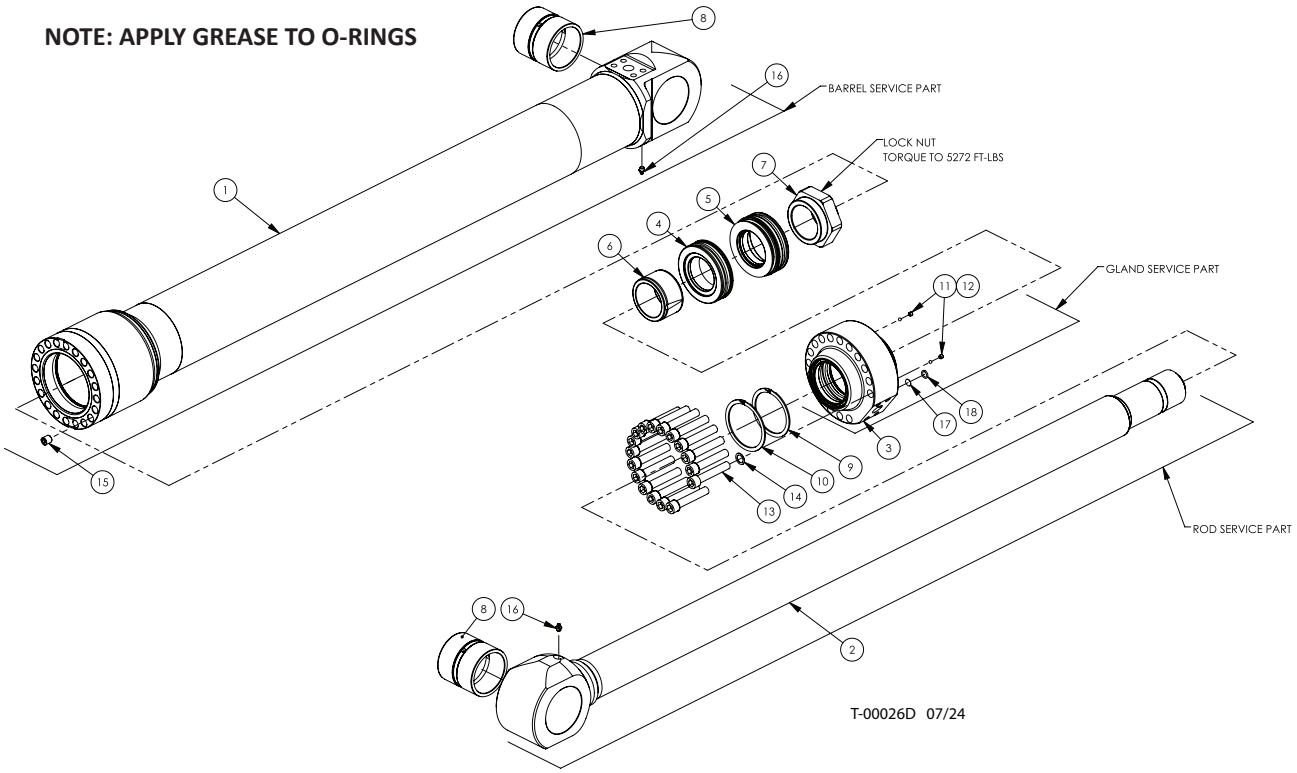


| Item | Part # | Description | Qty. |
|---|---|---|---|
| | 57837 | CYLINDER, STICK BOOM - TRACK 130MM | 1 |
| 1 | TPM130400 | BARREL ASSEMBLY | 1 |
| 2 | 59015 | ROD ASSEMBLY | 1 |
| 3 | TIM130308 | GLAND | 1 |
| 4 | TP130109 | FRONT PISTON | 1 |
| 5 | TP130110 | BACK PISTON | 1 |
| 6 | TIM130217 | CUSHION SLEEVE | 1 |
| 7 | LNUT M75 | LOCK NUT | 1 |
| 8 | 62066 | BUSHING | 1 |
| 9 | WHM-400 | SPIRAL SNAP RING | 2 |
| 10 | WHM-425 | SPIRAL SNAP RING | 1 |
| 11 | SHSS 05-18-0.250 | SET SCREW | 1 |
| 12 | 62057 | STEEL BALL | 2 |
| 13 | SHCS M16 X 90 | SHCS METRIC | 2 |
| 14 | SHSS M16 X 16 | SET SCREW | 17 |
| 15 | HD002049 | FLAT WASHER | 17 |
| 16 | GREASE 1/8” STR | GREASE FITTING | 1 |
| 17 | TL-C5-190-30 | TEMPERATURE LABEL | 2 |
| 18 | N1470 - 112 | O-RING | 1 |
| 19 | 57837 | SEAL KIT | 1 |
| 20 | HD002306 | HIGH PRESSURE SPOOL | 1 |
| 21 | 0123995 | DISC SPRING | 8 |
| 22 | 0125755 | DISC SPRING | 1 |
| 23 | HD002308 | PLUG, RELIEF | 1 |

# T100-00120 - STICK BOOM CYLINDER - 140MM BORE

**NOTE: HYDRAULIC FITTINGS GET 545 LOCTITE™**

**NOTE: APPLY GREASE TO O-RINGS**

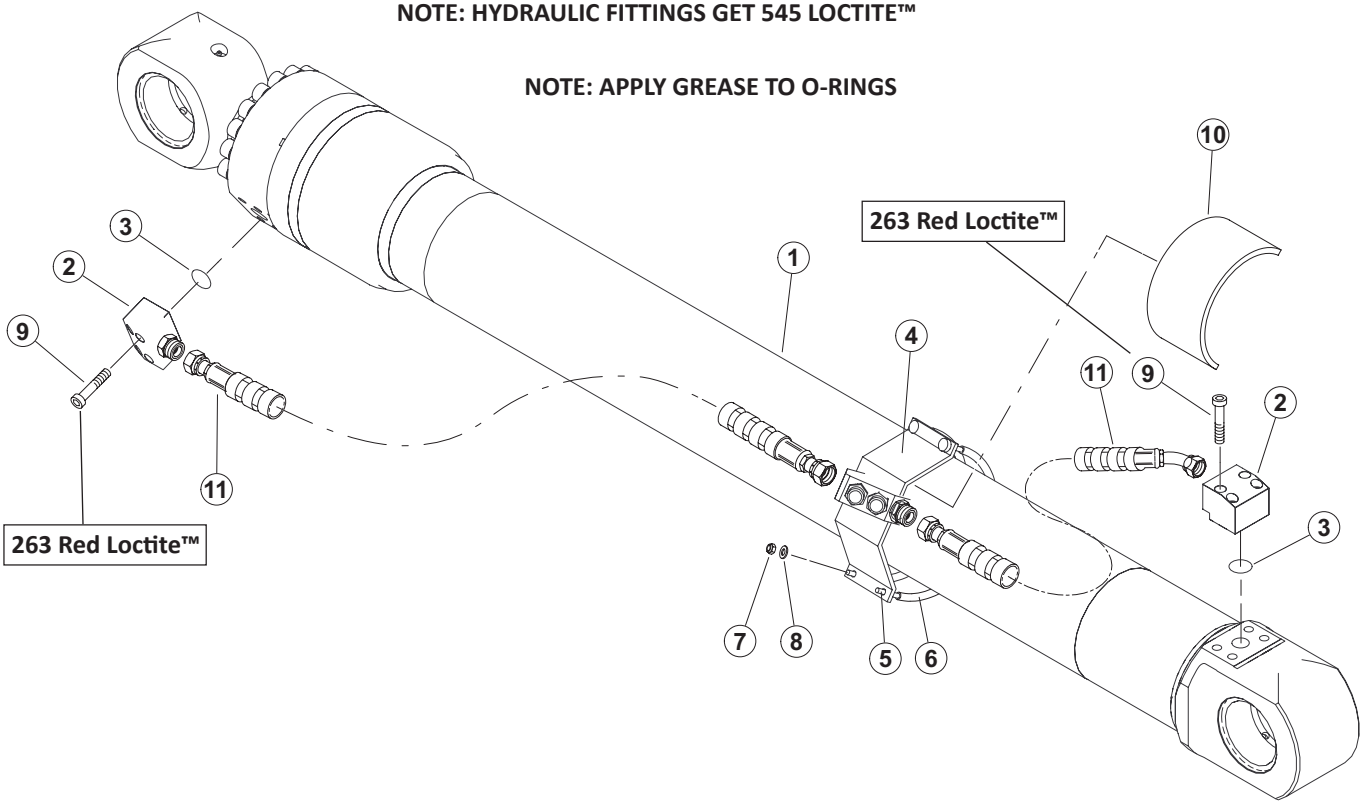


T-00011D 06/24

| Item | Part # | Description | Qty. |
|---|---|---|---|
| 1 | 57838 | CYLINDER, STICK - 140mm | 1 |
| 2 | 57601 | FLANGE, BLOCK ELBOW W184-16-16U CODE 62 | 2 |
| 3 | 15377 | O-RING - 1" SF (CODE 61/62) | 2 |
| 4 | 60521 | WELDMENT, CYL STK BARREL 45 DEG | 1 |
| 5 | 58031 | CABLE, CYLINDER, 15" | 2 |
| 6 | 55411 | 3/8" HEATER HOSE | AR |
| 7 | 55262 | NUT, NYLON INSERT LOCK, 3/8-24 | 4 |
| 8 | 15528 | WASHER, SAE FLAT - .375" | 4 |
| 9 | 59149 | BOLT - M12-1.75 X 60 Gr 12.9 SHC **263 RED LOCTITE™** | 8 |
| 10 | 60653 | RUBBER, CYL MANIFOLD MOUNT | 1 |
| 11 | 65855 | HOSE, HYD, 787TC38 16-16OS-16OS-SW | 1 |
| 12 | 65853 | HOSE, HYD, 787TC17 16-16OS-16O4-SW | 1 |

# T100-00121 - STICK BOOM CYLINDER COMPONENTS - 140MM BORE

**NOTE: APPLY GREASE TO O-RINGS**

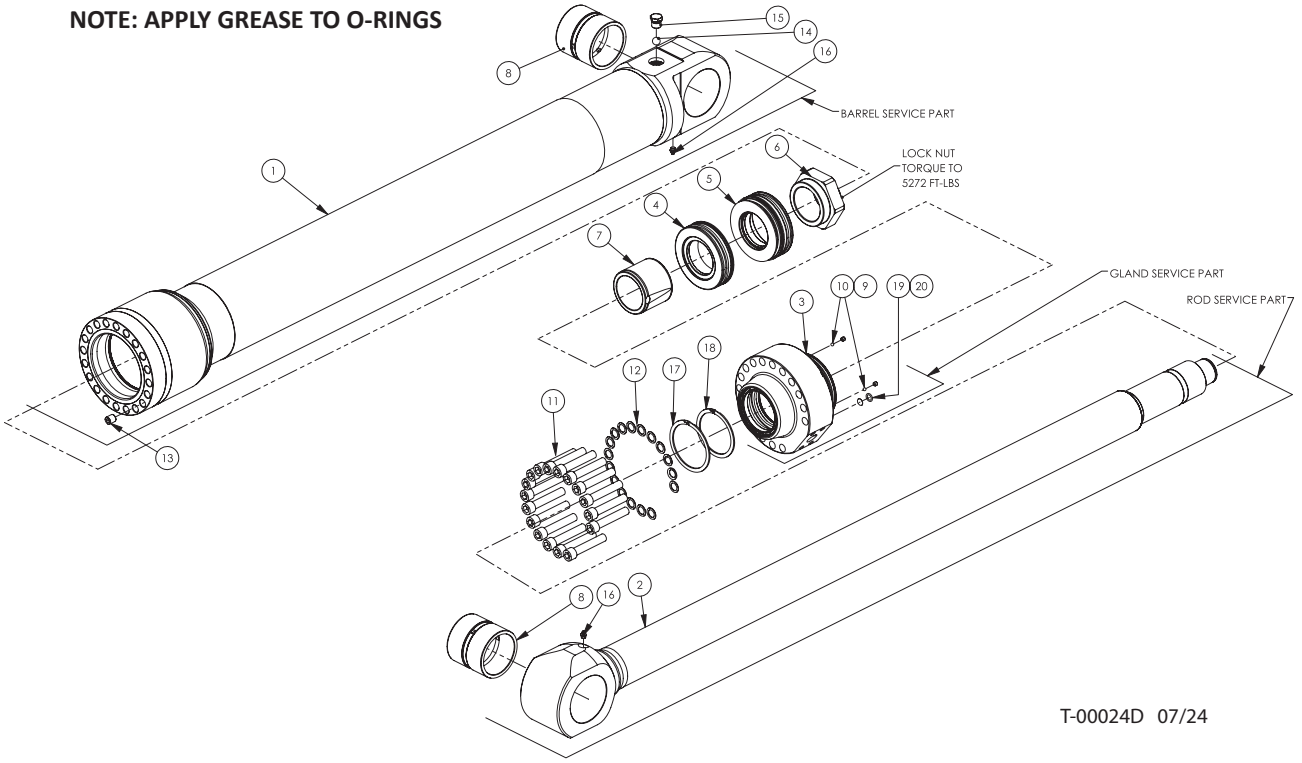


| Item | Part # | Description | Qty. |
|---|---|---|---|
| | 57838 | CYLINDER, STICK BOOM - TRACK 140MM | 1 |
| 1 | TPM140100 | BARREL ASSEMBLY | 1 |
| 2 | 58293 | ROD ASSEMBLY | 1 |
| 3 | 58294 | GLAND | 1 |
| 4 | TPM140209 | FRONT PISTON | 1 |
| 5 | TPM140210 | BACK PISTON | 1 |
| 6 | LNUT M75 | LOCKNUT | 1 |
| 7 | TIM130317 | CUSHION SLEEVE | 2 |
| 8 | 62066 | BUSHING | 2 |
| 9 | SHSS 05-18-0.250 | SET SCREW | 2 |
| 10 | BALL M6 | STEEL BALL | 17 |
| 11 | SHCS M16 X 90 | SHCS METRIC | 17 |
| 12 | 62057 | FLAT WASHER | 1 |
| 13 | SHSS M16 X 16 | SET SCREW | 1 |
| 14 | IRAB.M18.0R.420 | PRESSURE RELIEF w/ANTI CAV | 2 |
| 15 | GREASE 1/8” STR | GREASE FITTING | 1 |
| 16 | WHM-425 | SPIRAL SNAP RING | 1 |
| 17 | WHM-400 | SPIRAL SNAP RING | 1 |
| 18 | N1470 - 112 | O-RING | 1 |
| 19 | TL-C5-190-30 | TEMPERATURE LABEL | 1 |
| 20 | SKM14009000 | SEAL KIT | 1 |
| 21 | HD002308 | PLUG, RELIEF | 1 |
| 22 | 0125755 | DISC SPRING | 1 |
| 23 | 0123995 | DISC SPRING | 8 |
| 24 | HD002306 | HIGH PRESSURE SPOOL | 1 |

# T100-00130 - STICK BOOM - FELLER BUNCHER

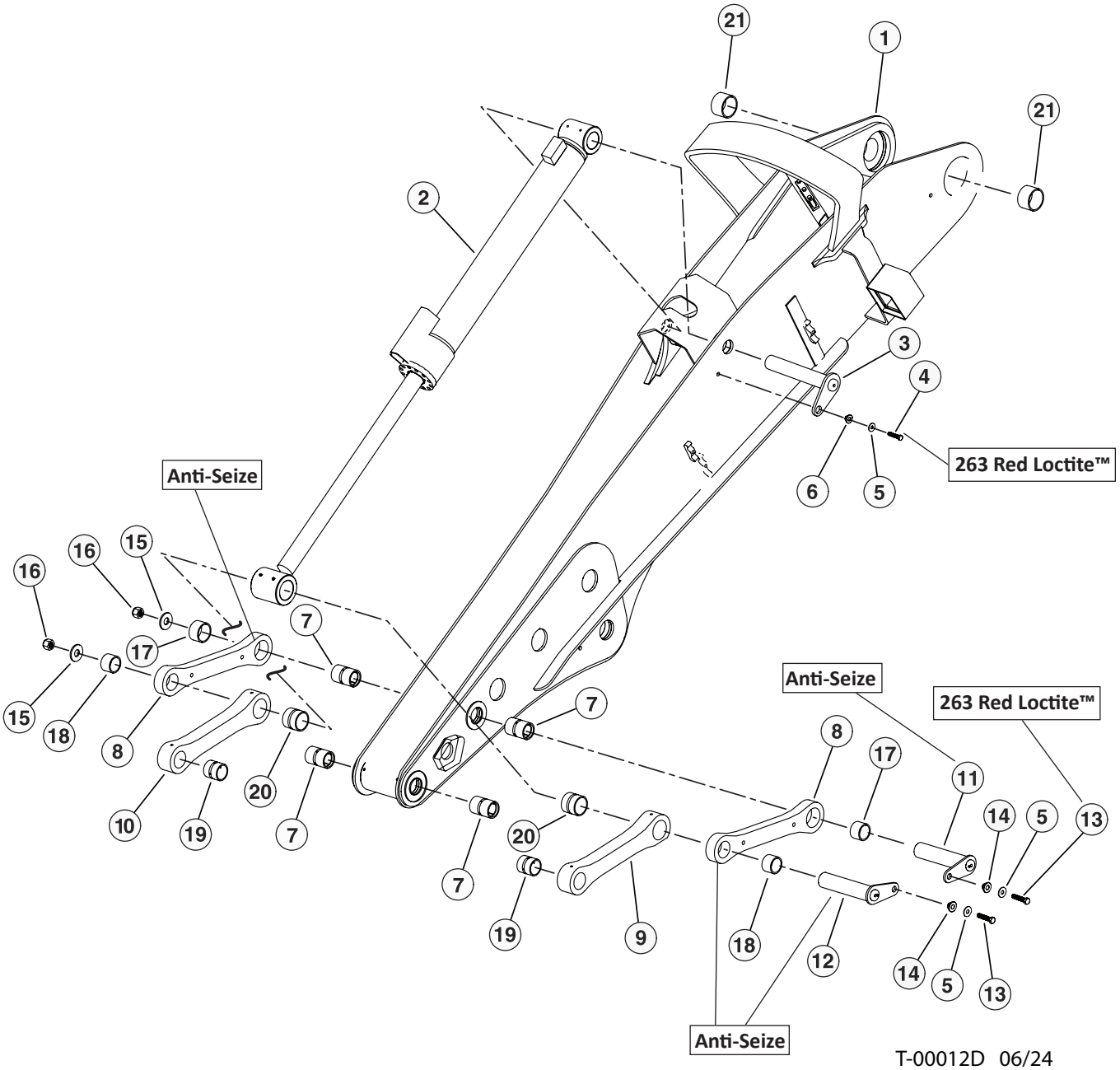


T-00012D 06/24

# T100-00130 - STICK BOOM - FELLER BUNCHER

| Item | Part # | Description | Qty. |
|---|---|---|---|
| 1 | 65966 | WELDMENT, STICK BOOM F/B D - SERIES | 1 |
| 2 | 57846 | TOOL CYLINDER ASSEMBLY | 1 |
| 3 | 51645 | PIN ASSEMBLY, 2.50 DIA X 14.75” | 1 |
| 4 | 10775 | BOLT - 3/4” x 2.5” **263 RED LOCTITE™** | 1 |
| 5 | 15550 | WASHER, SAE FLAT - .75” | 3 |
| 6 | 54136 | WASHER, pin retaining | 1 |
| 7 | 11704 | BUSHING - 2.5” X 4.25” | 4 |
| 8 | 54385 | BAR, LINK CONNECTING 3” PIN 2.0TK **ANTI-SEIZE** | 2 |
| 9 | 54421 | BAR, LINK - CONNECTING (TOP) 3” PIN L.H. | 1 |
| 10 | 54386 | BAR, LINK - CONNECTING (TOP) 3” PIN R.H. | 1 |
| 11 | 54391 | PIN ASSEMBLY 2.5 X 18.88(16”W/LGTH) **ANTI-SEIZE** | 1 |
| 12 | 54392 | PIN ASSEMBLY 3.0 X 18.88(16”W/LGTH) **ANTI-SEIZE** | 1 |
| 13 | 15549 | BOLT - .75” X 2.0 **263 RED LOCTITE™** | 2 |
| 14 | 18570 | WASHER, PIN RETAINING | 2 |
| 15 | 12021 | WASHER, BURNED | 2 |
| 16 | 10728 | NUT, NYLOCK - 2” (ZINC PLATED) | 2 |
| 17 | 54395 | BUSHING - 2.5” X 2.0” (4 BAR) | 2 |
| 18 | 54396 | BUSHING - 3.0” X 2.0” (4 BAR) | 2 |
| 19 | 14241 | BUSHING - 2.5” X 3” (4 BAR) | 2 |
| 20 | 54397 | BUSHING - 3.0” X 3.0” (4 BAR) | 2 |
| 21 | 18565 | BUSHING - 3.5” X 2.5” | 2 |

# T100-00140 - STICK BOOM TOOL TILT CYLINDER COMPONENTS

**NOTE: APPLY GREASE TO O-RINGS**

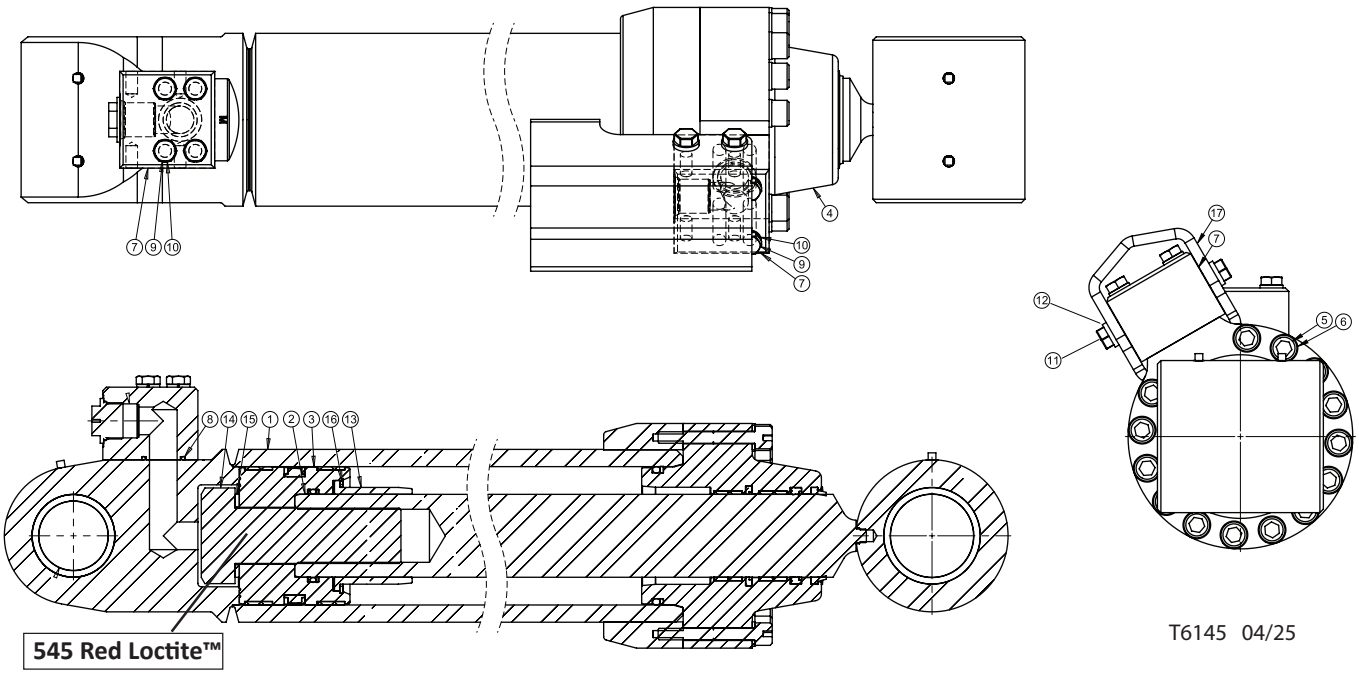


T6145 04/25

# T100-00140 - STICK BOOM TOOL TILT CYLINDER COMPONENTS

| Item | Part # | Description | Qty. |
|---|---|---|---|
| | 57846 | CYLINDER, TOOL TILT HD - BOLT ON PISTON | 1 |
| 1 | 204537B | BARREL ASSEMBLY | 1 |
| 2 | 303030B | ROD ASSEMBLY | 1 |
| 3 | 401570B | PISTON ASSEMBLY | 1 |
| 4 | 501697B | ROD BEARING ASSEMBLY | 1 |
| 5 | 711425A | SHCS,5/8-11,3.50,A574,PLN | 14 |
| 6 | 718177A | WASHER | 14 |
| 7 | 691608B | ADAPTER BLOCK | 2 |
| 8 | 790219A | O-RING,-219,NITRILE,90A | 2 |
| 9 | 711411A | HHCS,M12X1.75,90,10.9,PLN | 8 |
| 10 | 718092A | Lock Washer M12 | 8 |
| 11 | 711067A | HHCS,1/2-13,1.00,GR5,PLN | 4 |
| 12 | 718004A | LOCK WASHER,1/2”,PLN | 4 |
| 13 | 691860B | CUSHION SLEEVE | 1 |
| 14 | 711194A | 2.00-12 x 6.00” LG HHCS GR8 | 1 |
| 15 | 718032A | WASHER | 1 |
| 16 | 716147A | RETAINING RING | 1 |
| 17 | 291075A | GUARD | 1 |

# T100-00150 - GREASE LINE KIT - FELLER BUNCHER / CONTROL FALL PROCESSOR

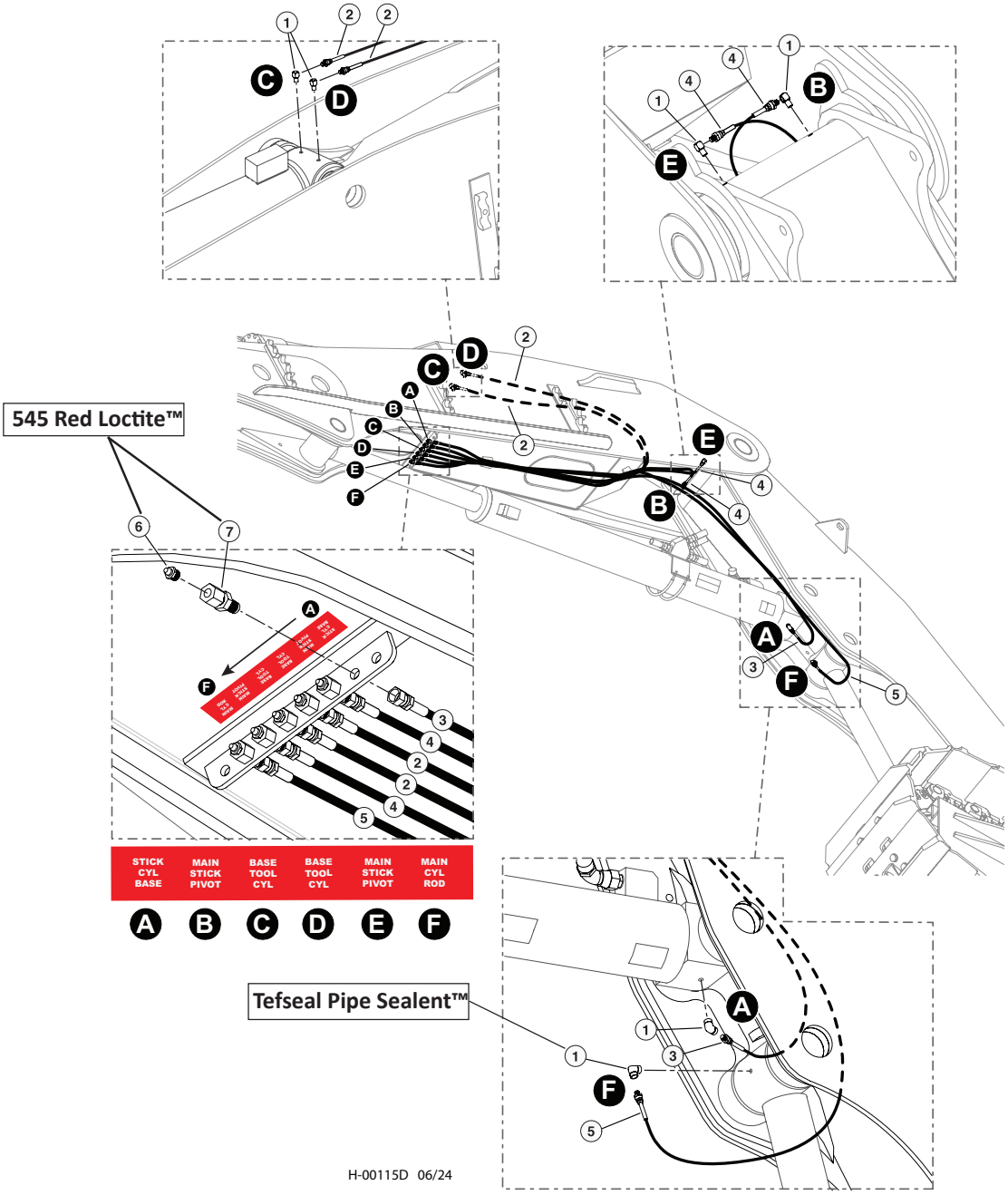


| Item | Part # | Description | Qty. |
|---|---|---|---|
| 1 | 22281 | FITTING, 90° - 5546132 **TEFSEAL PIPE SEALENT™** | 4 |
| 2 | 55605 - (KIT) | HOSE ASSY - 2133-02-02PS-04JS (TOOL CYL BASE) | 2 |
| 3 | 55605 - (KIT) | HOSE ASSY - 2138-02-02PS-04JS (STICK CYL BASE) | 1 |
| 4 | 55605 - (KIT) | HOSE ASSY - 2188-02-02PS-04JS (MAIN/STICK PIVOT) | 2 |
| 5 | 55605 - (KIT) | HOSE ASSY - 2147-02-02PS-04JS (MAIN CYL ROD) | 1 |
| 6 | 15658 | CONNECTOR, STRAIGHT BULKHEAD - 2239-2-4S **545 RED LOCTITE™** | 6 |
| 7 | 10704 | FITTING, STRAIGHT GREASE - 1/8” PIPE THREAD **545 RED LOCTITE™** | 6 |

# T-2239800 - ARM ASSEMBLY, FB, HD, U - (TANGUAY HD)

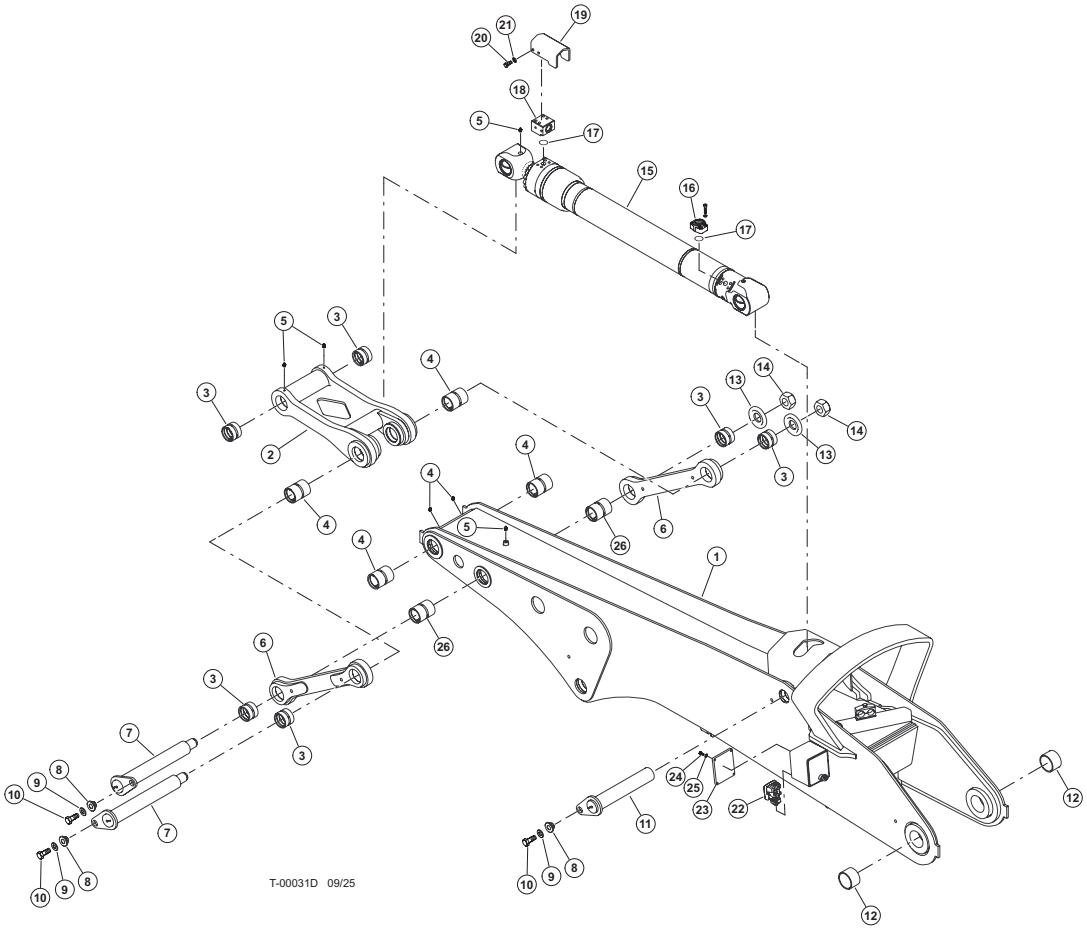


| Item | Part # | Description | Qty. |
|---|---|---|---|
| 1 | 58116 | WELDMENT, STICK BOOM HD (TANGUAY) | 1 |
| 2 | 487650 | WELDMENT, LINK BOOM TO TOOL CYL-TAIL | 1 |
| 3 | 48303 | BUSHING, 3.5 X 3.0X 2.5 | 6 |
| 4 | 484250 | BUSHING, 3.5 X 3.0 X 4.5 | 6 |
| 5 | 59122 | ZERK, GREASE - 1/8-27 NPTF, ST | 4 |
| 6 | 62580 | DOG BONE-POWER STICK | 2 |
| 7 | 48310 | 3.0 X 20.00 PIN ASSY | 2 |
| 8 | 18570 | WASHER, PIN RETAINING | 3 |
| 9 | 15550 | WASHER, SAE FLAT - .75” | 3 |
| 10 | 15549 | BOLT - .75” X 2.0 | 3 |
| 11 | 60683 | PIN, TOOL TILT CYLINDER HD | 1 |
| 12 | 18565 | BUSHING - 3.5” X 2.5” | 2 |
| 13 | 12021 | WASHER, BURNED | 2 |
| 14 | 10728 | NUT, NYLON LOCK | 2 |
| 15 | 58101 | CYLINDER, TOOL TILT - T755 WC | 1 |
| 16 | 18397 - (KIT - 59052) | CONNECTOR, FLANGE PAD - W48-16-16U(C 62) | 1 |
| 17 | 15377 | O-RING - 1” SF (CODE 61/62) | 2 |
| 18 | 58231 | MANIFOLD, PORT BLOCK - TOOL TILT CYL. | 1 |
| 19 | 58232 | GUARD, PORT BLOCK TOOL TILT CYL | 1 |
| 20 | 10783 | BOLT - .5” X 1” | 4 |
| 21 | 15534 | WASHER, SAE FLAT - .5” | 4 |
| 22 | 50999 | LIGHT, BOOM MOUNTED - LED LAMPS | 1 |
| 23 | 53081 | LEXAN, BOOM LIGHT COVER | 1 |
| 24 | 15576 | BOLT - .25” X 1.00” | 4 |
| 25 | 10757 | WASHER, SAE FLAT - .25” | 4 |
| 26 | 690040 | BUSHING, 3.5”X3.0”X 4.5” | 2 |

# T100-00160 - STICK BOOM FOUR BAR LINK GREASE FITTINGS

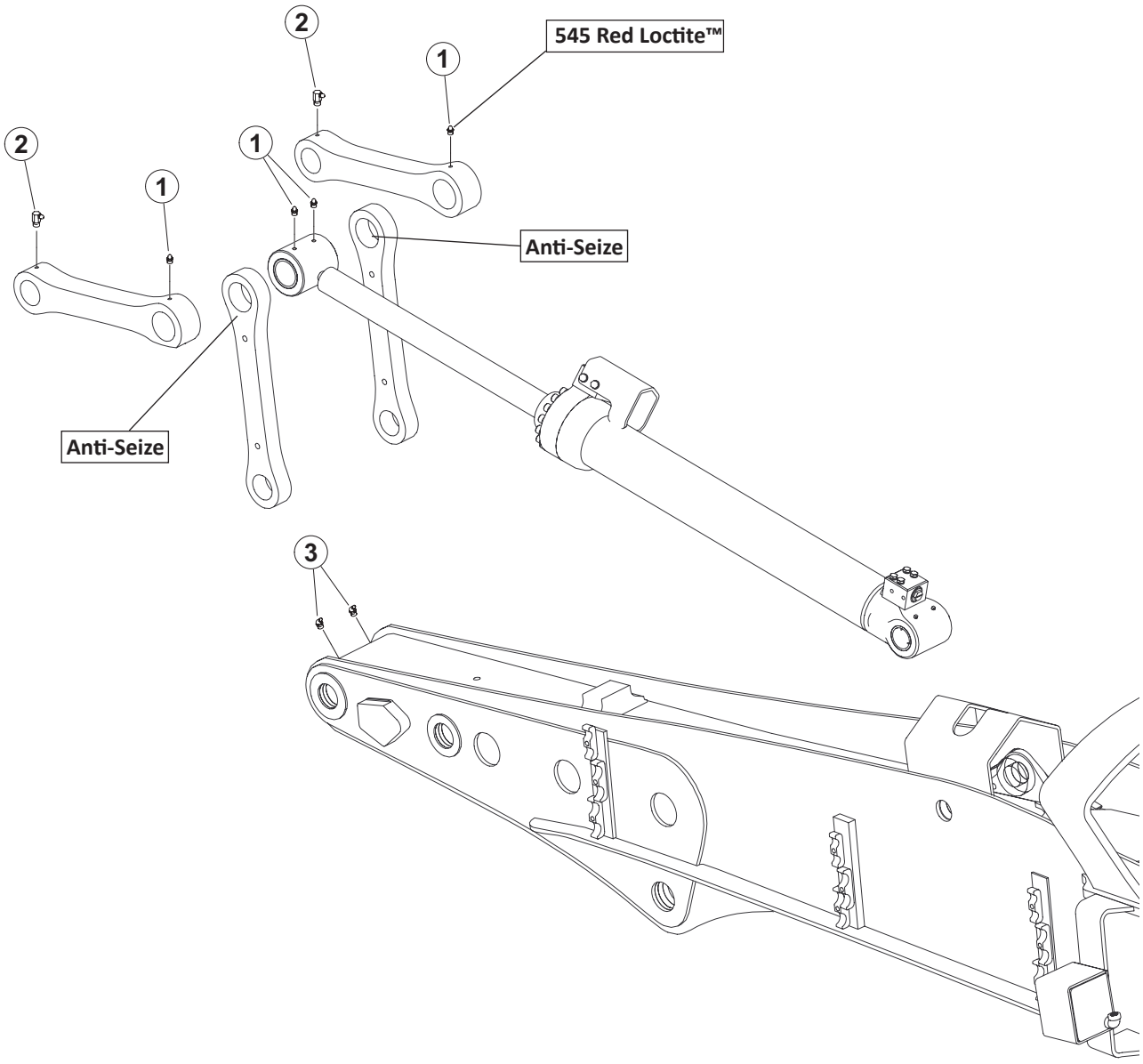


T-00013D 06/24

| Item | Part # | Description | Qty. |
|---|---|---|---|
| 1 | 59122 | ZERK, GREASE - 1/8-27 NPTF, ST **545 RED LOCTITE™** | 4 |
| 2 | 59123 | ZERK, GREASE - 1/8-27 NPTF, 90 | 2 |
| 3 | 59133 | ZERK, GREASE - 1/8-27 NPTF, 45 | 2 |

# T100-00170 - FELLER BUNCHER / CONTROL FALL PROCESSOR - LIGHT INSTALLATION

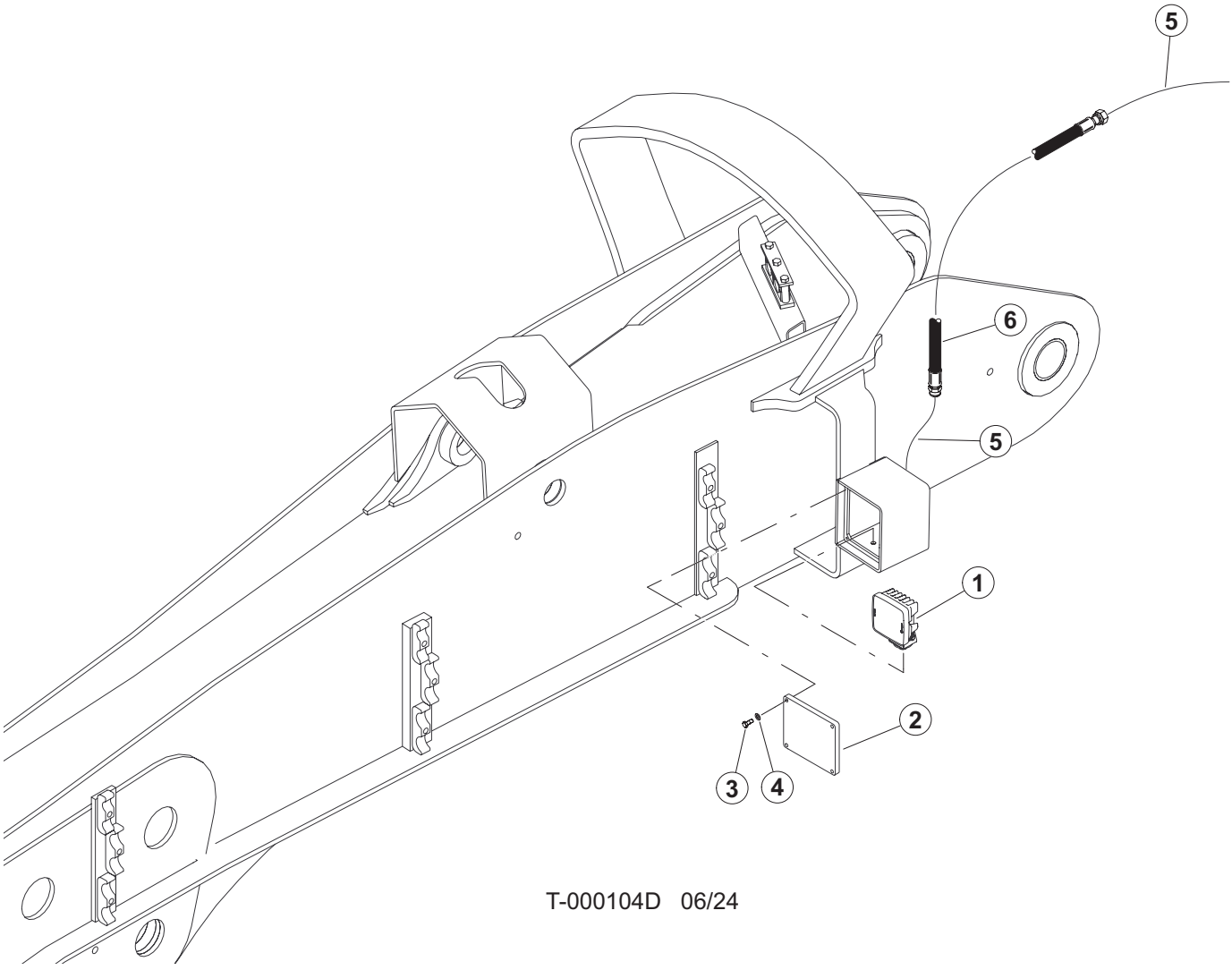


T-000104D 06/24

| Item | Part # | Description | Qty. |
|---|---|---|---|
| 1 | 53208 | LIGHT | 1 |
| 2 | 53081 | LEXAN, BOOM LIGHT/SWING OUT DOOR B&C SER | 1 |
| 3 | 15576 | 1/4” X 1’ BOLT | 4 |
| 4 | 10757 | 1/4” WASHER | 4 |
| 5 | 58380 | CABLE | AR |
| | 54065 | SOCKET, CONTACT - #2 **(NOT SHOWN)** | 1 |
| | 53176 | CONNECTOR, TERMINAL 16-18G SOLID DEUTSCH **(NOT SHOWN)** | 2 |
| | 54064 | SOCKET, WEDGE LOCK - #2 **(NOT SHOWN)** | 1 |
| 6 | 58068 - (KIT) | HOSE ASSY - 387TC84 06-06OS-08PS (STICK BOOM LIGHT CABLE) | 1 |

# T100-00170 - FIXED PROCESSOR STICK BOOM

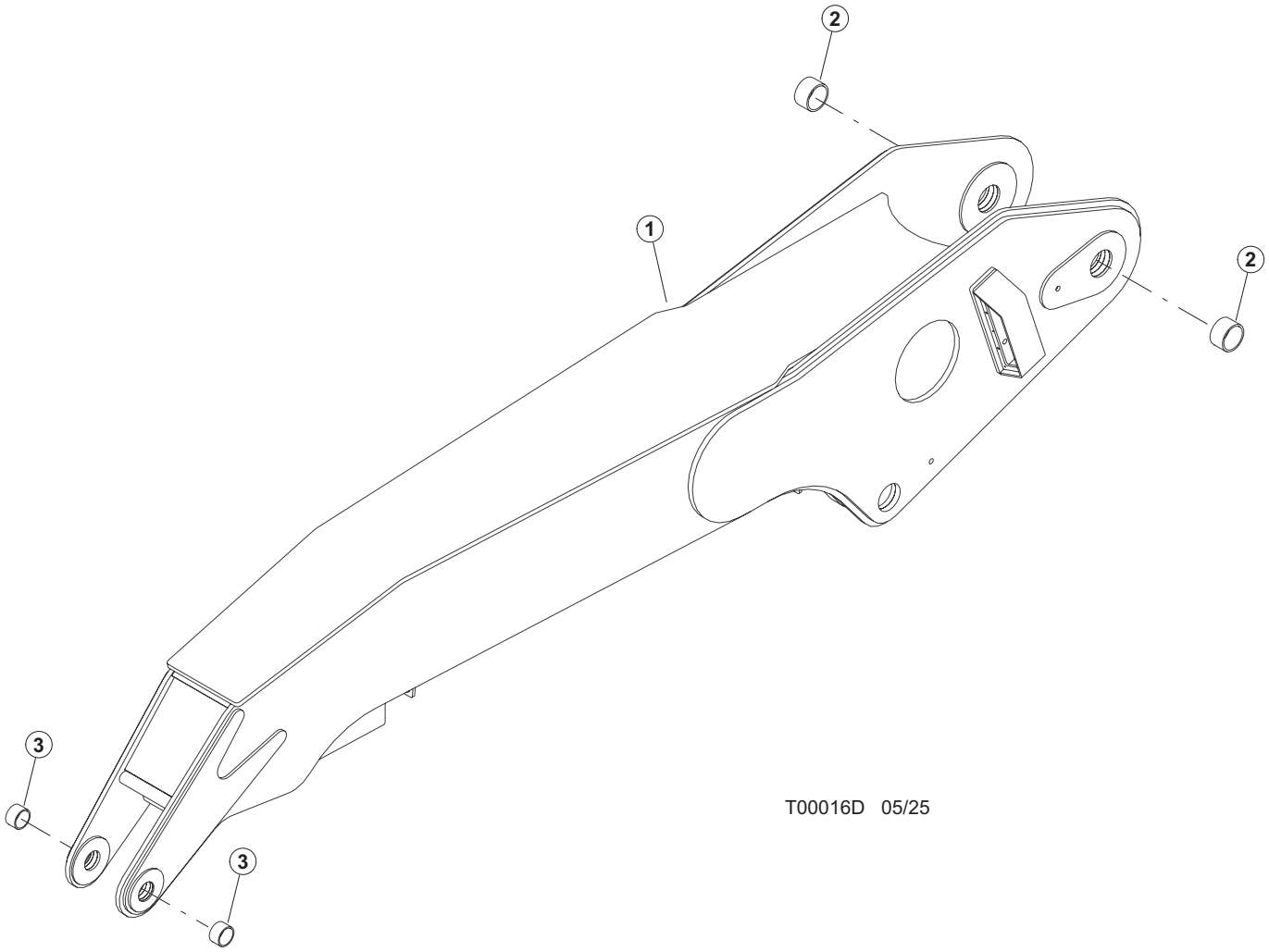


| Item | Part # | Description | Qty. |
|---|---|---|---|
| 1 | 47805 | WELDMENT, STICK BOOM HARVESTOR | 1 |
| 2 | 47222 | BUSHING, HARVESTER STICK BOOM | 2 |
| 3 | 65907 | BUSHING 2.5ID X 3.0OD X 2.2LG | 2 |

# T100-00180 - FIXED PROCESSOR STICK BOOM - LIGHT INSTALLATION

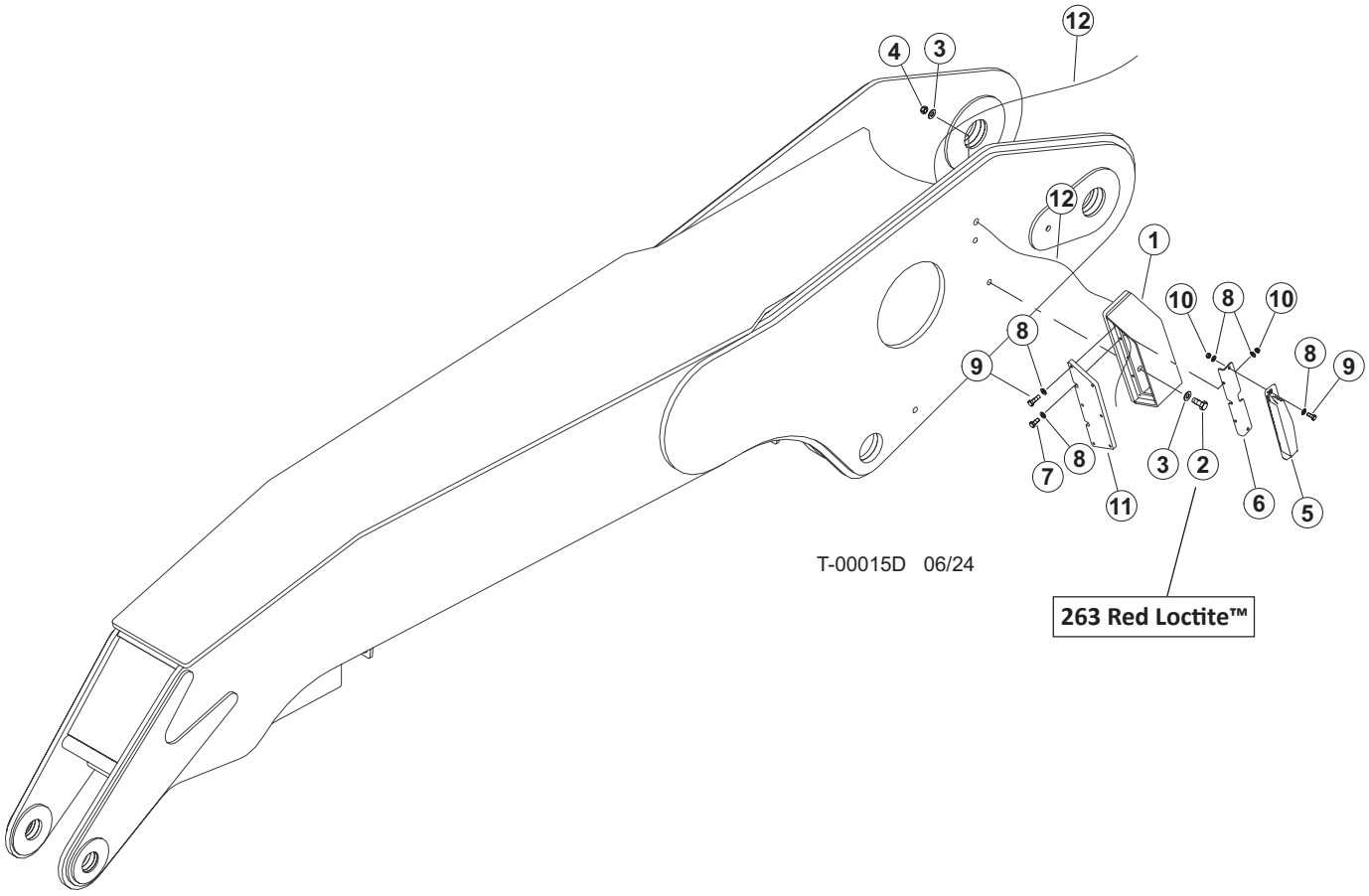


| Item | Part # | Description | Qty. |
|---|---|---|---|
| 1 | 48363 | BOX, BOOM LIGHT - TAIL | 1 |
| 2 | 15517 | BOLT - .625" X 2.5" **263 RED LOCTITE™** | 2 |
| 3 | 10771 | WASHER, SAE FLAT - .625" | 4 |
| 4 | 10816 | NUT, LOCK - .625" | 2 |
| 5 | 57384 | LIGHT, BOOM RADIUS - LED | 1 |
| 6 | 48364 | ANGLE, LIGHT | 1 |
| 7 | 15576 | BOLT - .25" X 1.00" | 6 |
| 8 | 10757 | WASHER, SAE FLAT - .25" | 14 |
| 9 | 15604 | BOLT - .25" X .75" | 4 |
| 10 | 15509 | NUT, NYLOCK - .25" | 4 |
| 11 | 48362 | GUARD, BOOM LIGHT | 1 |
| 12 | 58380 | CABLE | AR |
| | 54065 | SOCKET, CONTACT - #2 **(NOT SHOWN)** | 1 |
| | 53176 | CONNECTOR, TERMINAL 16-18G SOLID DEUTSCH **(NOT SHOWN)** | 2 |
| | 54064 | SOCKET, WEDGE LOCK - #2 **(NOT SHOWN)** | 1 |

# T100-00190 - PROCESSOR SQUIRT BOOM

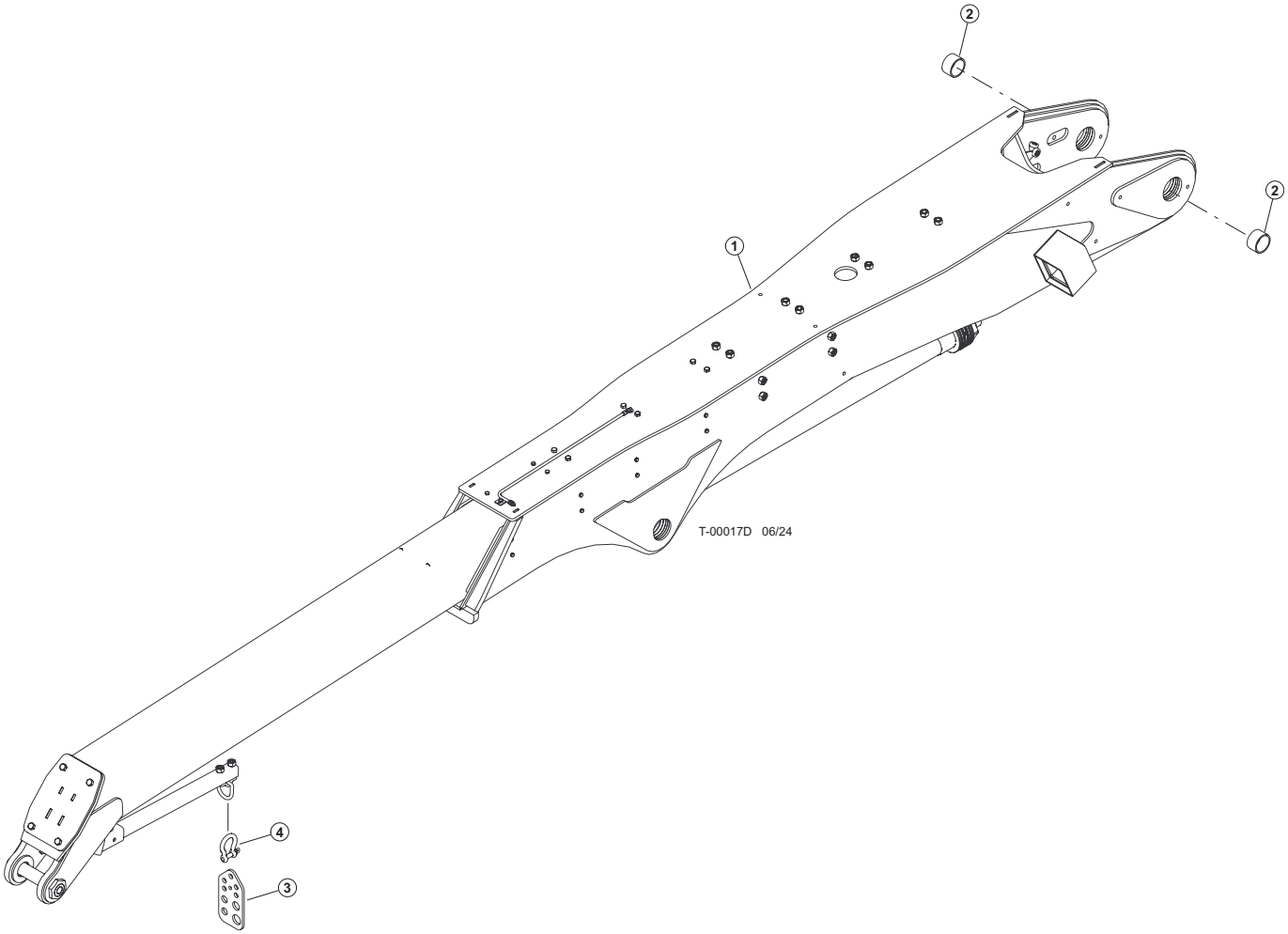


| Item | Part # | Description | Qty. |
|---|---|---|---|
| 1 | 60705 | BOOM, SQUIRT FELLER BUNCHER - HD D SERIE | 1 |
| 2 | 47222 | BUSHING, HARVESTER STICK BOOM | 2 |
| 3 | 46391 | WELDMENT, BULKHEAD DANGLE-UNIVERSAL | 1 |
| 4 | 59134 | SHACKLE, 1/2” | 1 |

# T100-00200 - PROCESSOR SQUIRT BOOM LIGHT INSTALLATION

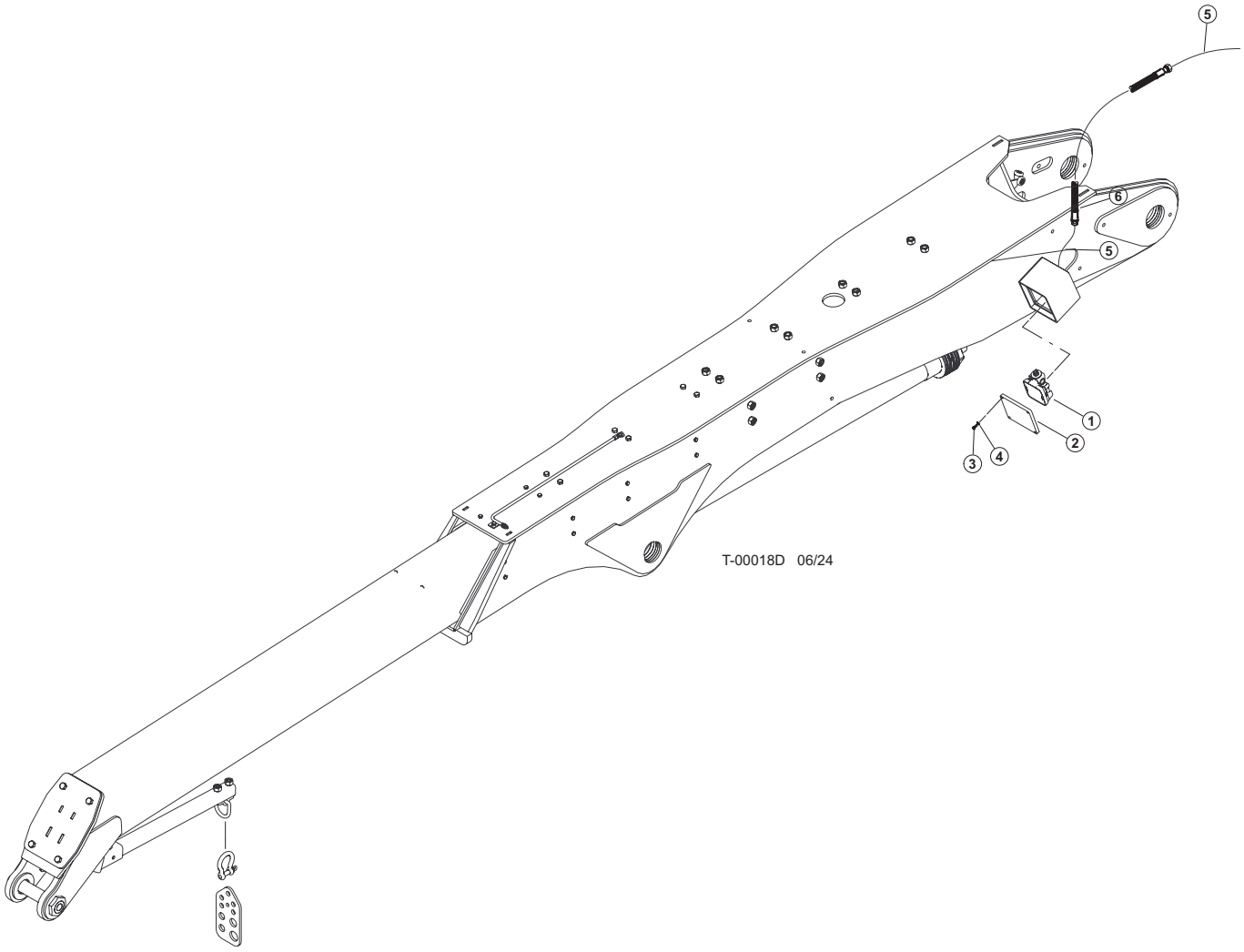


| Item | Part # | Description | Qty. |
|---|---|---|---|
| 1 | 53208 | LIGHT | 1 |
| 2 | 53081 | LEXAN, BOOM LIGHT/SWING OUT DOOR B&C SER | 1 |
| 3 | 15576 | 1/4” X 1’ BOLT | 4 |
| 4 | 10757 | 1/4” WASHER | 4 |
| 5 | 54065 | CABLE | AR |
| | 54065 | SOCKET, CONTACT - #2 **(NOT SHOWN)** | 1 |
| | 53176 | CONNECTOR, TERMINAL 16-18G SOLID DEUTSCH | 2 |
| | 54064 | SOCKET, WEDGE LOCK - #2 **(NOT SHOWN)** | 1 |
| 6 | 58068 - (KIT) | HOSE ASSY - 387TC84 06-06OS-08PS (STICK BOOM LIGHT CABLE) | 1 |

# T100-00201 - PROCESSOR SQUIRT BOOM COMPONENTS

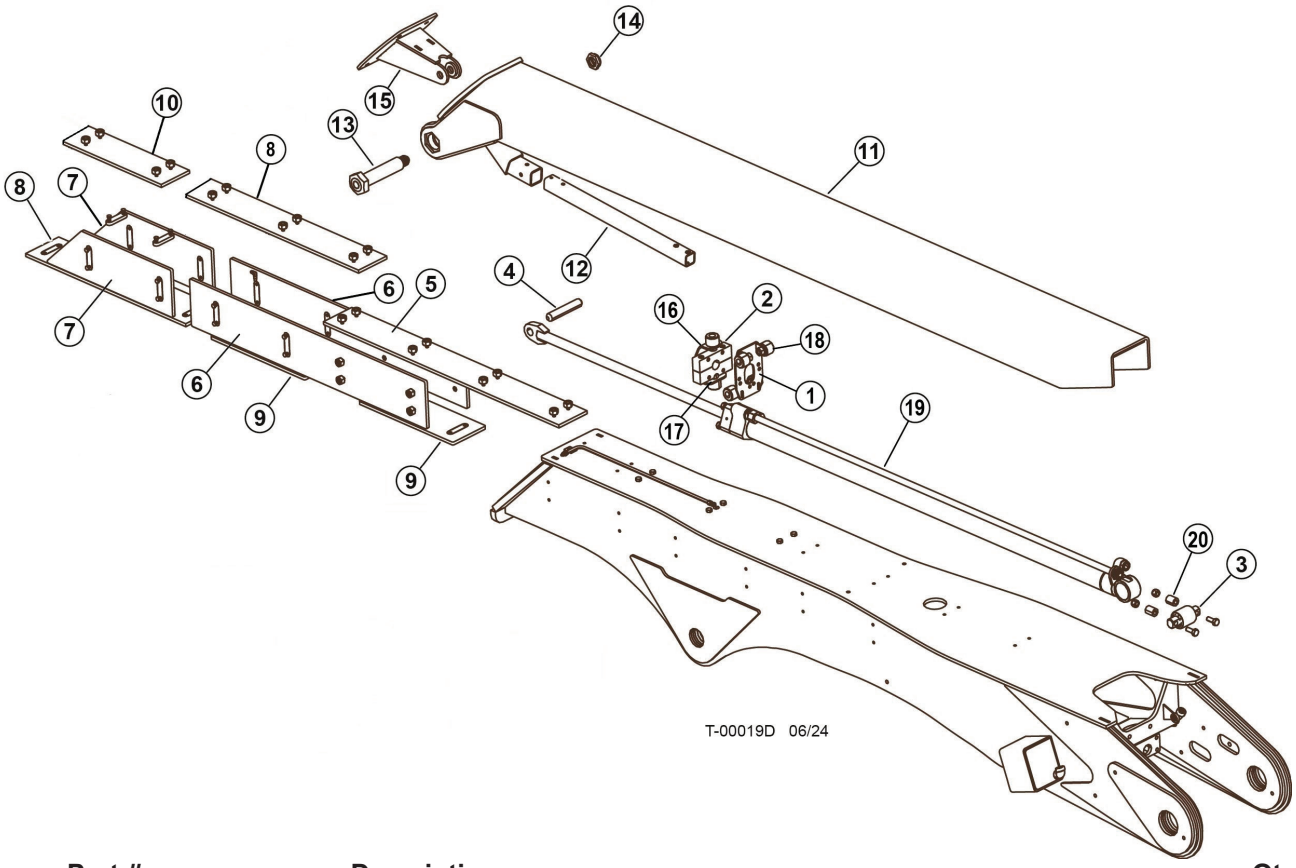


| Item | Part # | Description | Qty. |
|---|---|---|---|
| 1 | XB4085 | BUMPER MOUNT MAIN | 1 |
| 2 | XB4082 | TRUSS/CYL ROD | 1 |
| 3 | **SEE DESRIPTION** | MOUNT BUSHING **(CALL)** | 1 |
| 4 | **SEE DESRIPTION** | PIN **(CALL)** | 1 |
| 5 | XB3007 | WEAR PAD | 1 |
| 6 | XB3029 | WEAR PAD | 2 |
| 7 | XB3002 | WEAR PAD | 2 |
| 8 | XB3014 | WEAR PAD | 2 |
| 9 | XB3013 | WEAR PAD | 2 |
| 10 | XB3015 | WEAR PAD | 1 |
| 11 | **SEE DESRIPTION** | INNER SLIDE **(CALL)** | 1 |
| 12 | **SEE DESRIPTION** | TUBE - 2” **(CALL)** | 1 |
| 13 | **SEE DESRIPTION** | PIN **(CALL)** | 1 |
| 14 | **SEE DESRIPTION** | NUT **(CALL)** | 1 |
| 15 | XB2018 | MOUNT, CYL ROD | 1 |
| 16 | XB4084 | BUMPER MOUNT UPPER | 1 |
| 17 | XB4083 | BUMPER MOUNT LOWER | 1 |
| 18 | XB3018 | BUMPER | 6 |
| 19 | 132058B | CYLINDER ASSEMBLY | 1 |
| 20 | XB4081 | SPACERS | 2 |

# T100-00202 - PROCESSOR SQUIRT BOOM CYLINDER COMPONENTS

**NOTE: APPLY GREASE TO O-RINGS**

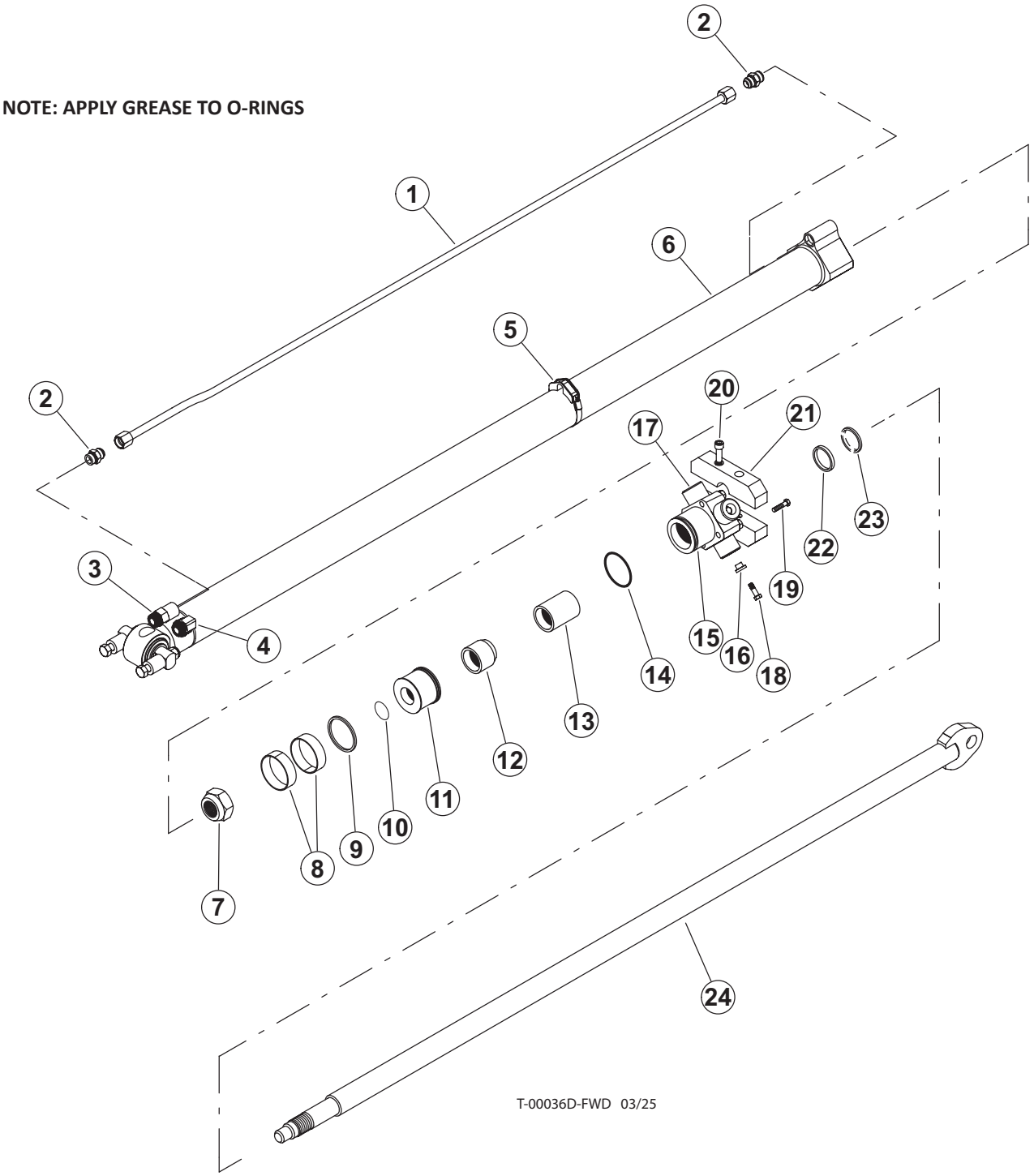

# T100-00202 - PROCESSOR SQUIRT BOOM CYLINDER COMPONENTS

| Item | Part # | Description | Qty. |
|---|---|---|---|
| | 51008 | CYLINDER, 6’ SQUIRT | |
| 1 | 281266A | TRANSFER TUBE | |
| 2 | 710785A | CONNNECTOR, STR 10 orb X 10 jic | |
| 3 | **SEE DESCRIPTION** | CONNNECTOR, STR **(CALL)** | |
| 4 | **SEE DESCRIPTION** | ELBOW, 90 **(CALL)** | |
| 5 | **SEE DESCRIPTION** | CLAMP **(CALL)** | |
| | 21028 | GROMMET | |
| 6 | 51032 | BARREL ASSEMBLY | |
| 7 | 712118A | NUT | |
| 8 | 721197A | RING, PISTON WEAR | |
| 9 | 700296A | RING, OISTON SQUARE | |
| 10 | 51030 | O-RING SLEEVE | |
| 11 | 411326B | PISTON | |
| 12 | 690680B | CUSHION | |
| 13 | 721235A | WEAR RING | |
| 14 | 51031 | RETAINER SLEEVE | |
| 15 | 511294B | PUCK - CYLINDER SUPPORT - 2” OD X .5” THICK (6” SLIDE TUBE) | |
| 16 | **SEE DESCRIPTION** | PUCK, CYLINDER SUPPORT - 2” OD X 1.4” THICK (8” SLIDE TUBE) **(CALL)** | |
| 17 | **SEE DESCRIPTION** | CAPSCREW- .375” X .75” FHCS BRASS (6” SLIDE TUBE) **(CALL)** | |
| 17 | **SEE DESCRIPTION** | CAPSCREW - .375”-16 X 1.5 HEX HEAD GR5” (8” SLIDE TUBE) **(CALL)** | |
| 18 | **SEE DESCRIPTION** | BOLT **(CALL)** | |
| 18 | **SEE DESCRIPTION** | CAP SCREW - .5”-13 X 3.00” SOCKET HEAD | |
| 19 | 711206A | CAP SCREW | |
| 20 | **SEE DESCRIPTION** | TRUSS - CYLINDER SUPPORT (8” SLIDE TUBE) **(CALL)** | |
| 21 | **SEE DESCRIPTION** | U-CUP, ROD BEARING **(CALL)** | |
| 22 | 701126A | ROD SEAL | |
| 23 | 51029 | ROD ASSEMBLY | |
| 24 | 51033 | KIT, SEAL REPAIR - BOOM EXTENSION CYLINDER | |

# T100-00210 - STICK BOOM CYLINDER - 130MM BORE

**NOTE: HYDRAULIC FITTINGS GET 545 LOCTITE™**

**NOTE: APPLY GREASE TO O-RINGS**

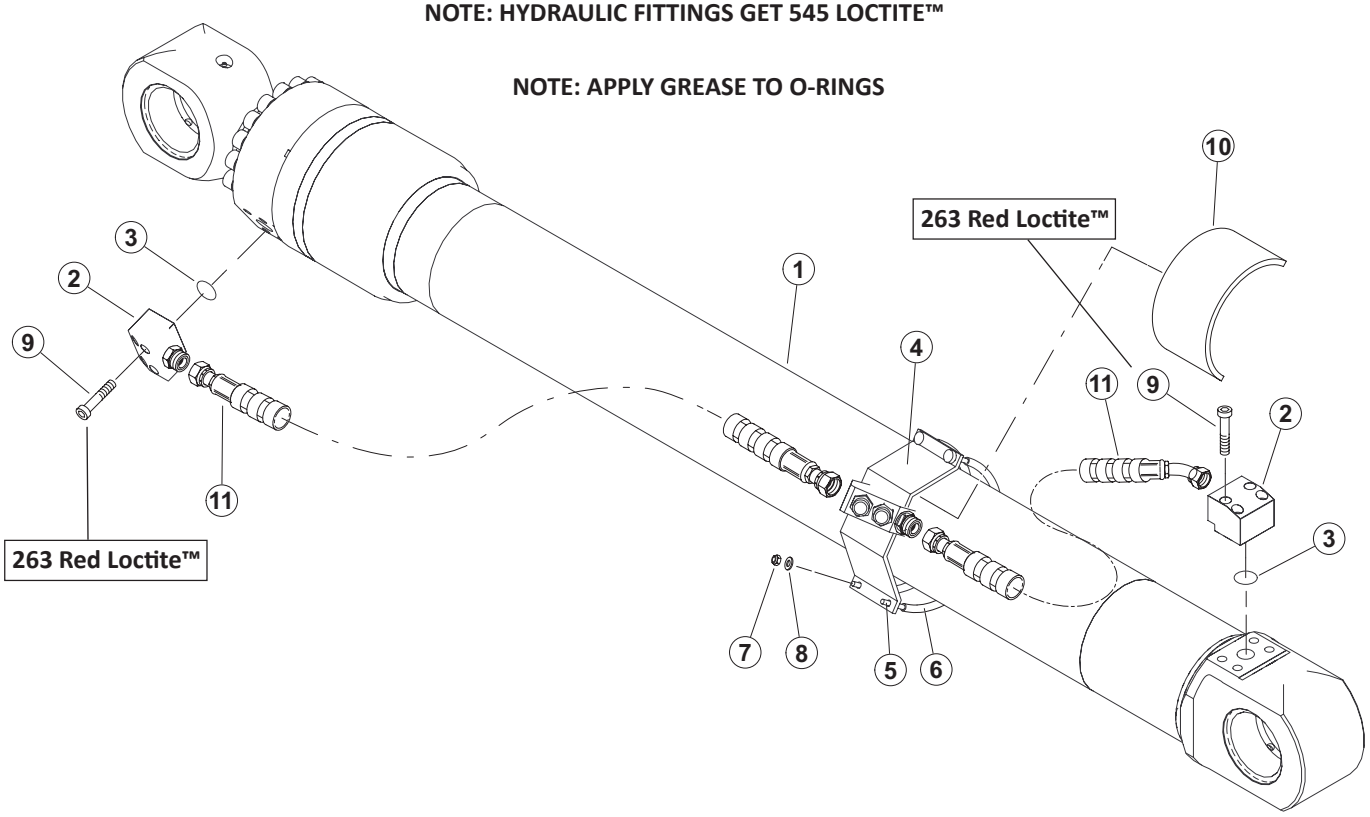


T-00011D 06/24

| Item | Part # | Description | Qty. |
|---|---|---|---|
| 1 | 57837 | CYLINDER, STICK - FB 130mm | 1 |
| 2 | 57601 | FLANGE, BLOCK ELBOW W184-16-16U CODE 62 | 2 |
| 3 | 15377 | O-RING - 1” SF (CODE 61/62) | 2 |
| 4 | 60521 | WELDMENT, CYL STK BARREL 45 DEG | 1 |
| 5 | 58031 | CABLE, CYLINDER, 15” | 2 |
| 6 | 55411 | 3/8” HEATER HOSE | AR |
| 7 | 55262 | NUT, NYLON INSERT LOCK, 3/8-24 | 4 |
| 8 | 15528 | WASHER, SAE FLAT - .375” | 4 |
| 9 | 59149 | BOLT - M12-1.75 X 60 Gr 12.9 SHC **263 RED LOCTITE™** | 8 |
| 10 | 60653 | RUBBER, CYL MANIFOLD MOUNT | 1 |
| 11 | 65855 | HOSE, HYD, 787TC38 16-16OS-16OS-SW | 1 |
| 12 | 65853 | HOSE, HYD, 787TC17 16-16OS-16O4-SW | 1 |

# T100-00211 - STICK BOOM CYLINDER COMPONENTS - 130MM BORE

**NOTE: APPLY GREASE TO O-RINGS**

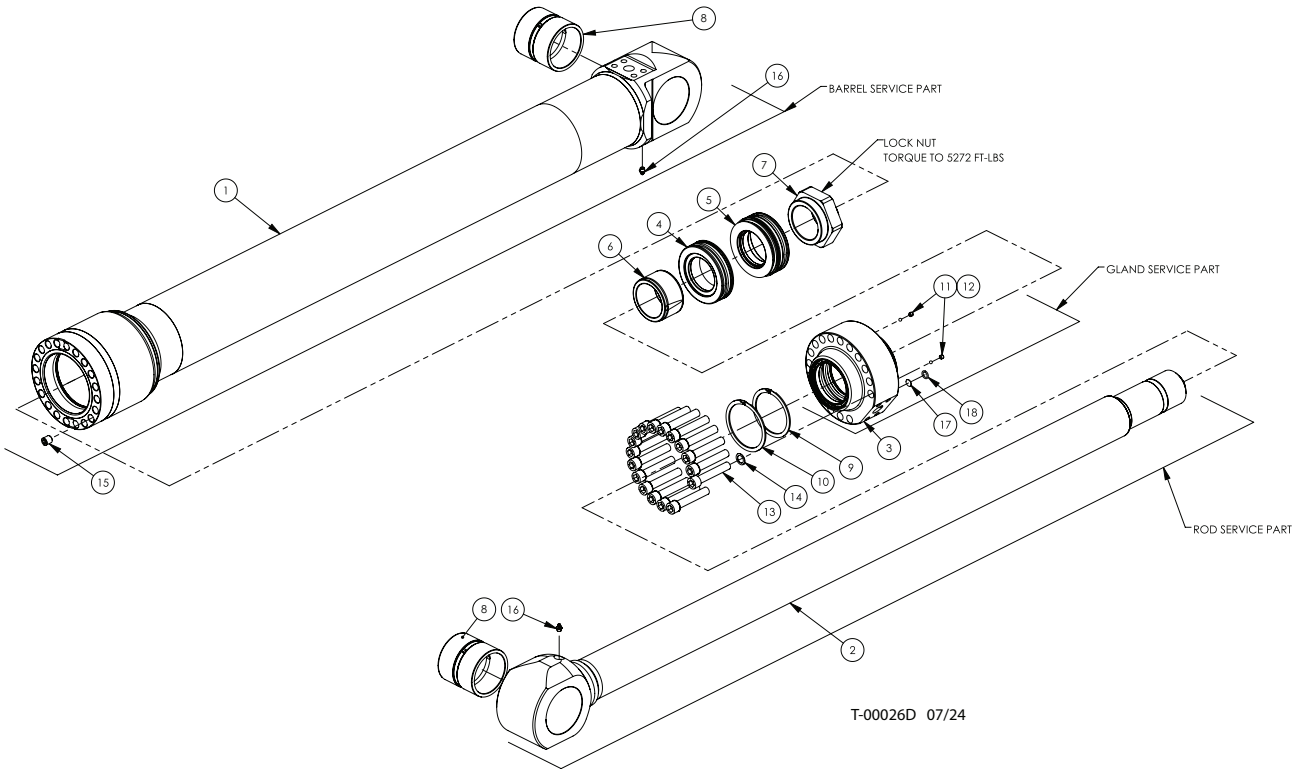


| Item | Part # | Description | Qty. |
|---|---|---|---|
| | 57837 | CYLINDER, STICK BOOM - TRACK 130MM | 1 |
| 1 | TPM130405 | BARREL ASSEMBLY | 1 |
| 2 | TPM130405 | ROD ASSEMBLY | 1 |
| 3 | TIM130308 | GLAND | 1 |
| 4 | TP130109 | FRONT PISTON | 1 |
| 5 | TP130110 | BACK PISTON | 1 |
| 7 | LNUT M75 | LOCKNUT | 1 |
| 6 | TIM130217 | CUSHION SLEEVE | 1 |
| 8 | 62066 | BUSHING | 1 |
| 9 | WHM-400 | SPIRAL SNAP RING | 2 |
| 10 | WHM-425 | SPIRAL SNAP RING | 1 |
| 11 | SHSS 05-18-0.250 | SET SCREW | 1 |
| 12 | BALL M6 | STEEL BALL | 2 |
| 13 | SHCS M16 X 90 | SHCS METRIC | 2 |
| 14 | HD002049 | FLAT WASHER | 17 |
| 15 | SHSS M16X16 | SET SCREW | 17 |
| 16 | GREASE 1/8" NPT | GREASE FITTING | 1 |
| 17 | TL-C5-190-30SEE | TEMPERATURE LABEL | 2 |
| 18 | N1470-112SEE | O-RING | 1 |
| 19 | SKM13009002 | SEAL KIT | 1 |
| | | | 1 |

# T100-00220 - STICK BOOM CYLINDER - 140MM BORE

**NOTE: HYDRAULIC FITTINGS GET 545 LOCTITE™**

**NOTE: APPLY GREASE TO O-RINGS**

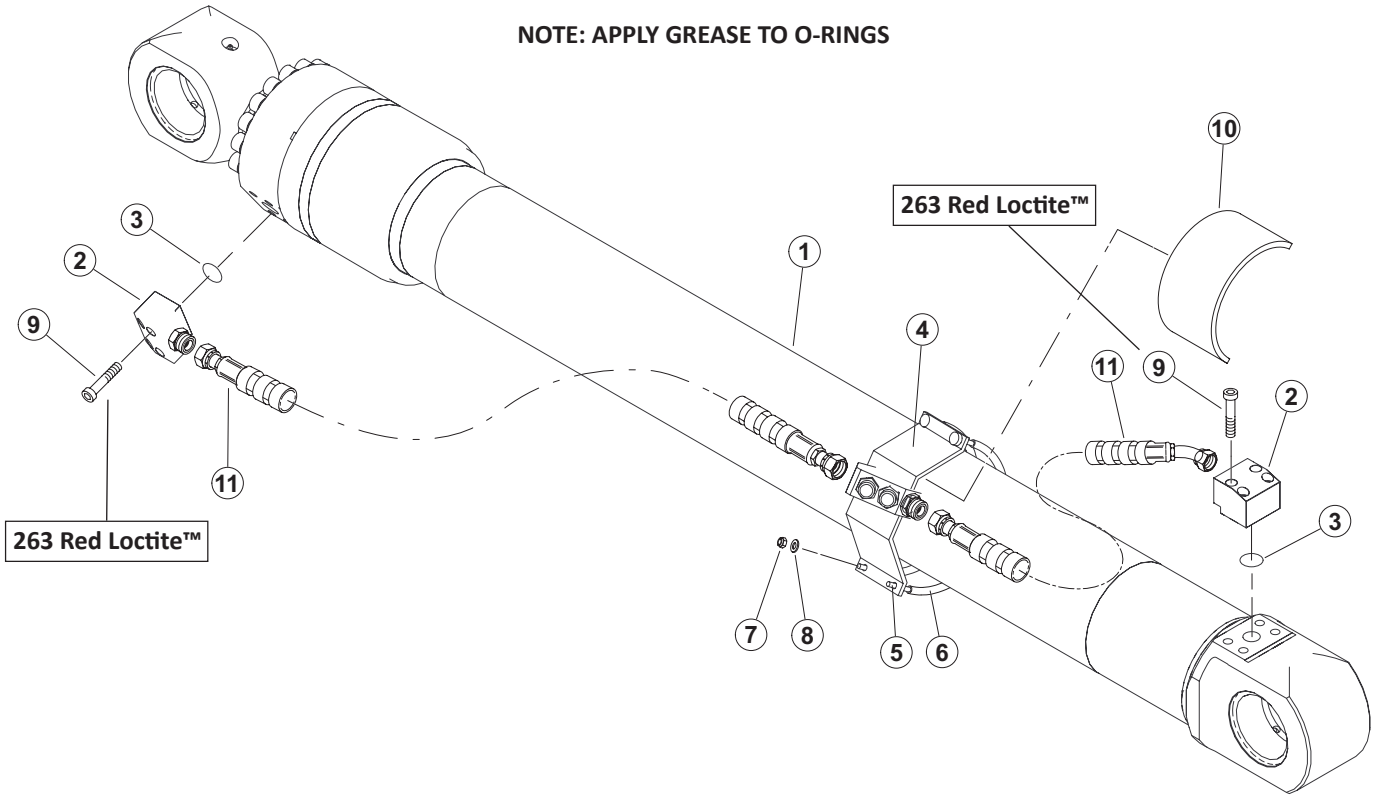


T-00011D 06/24

| Item | Part # | Description | Qty. |
|---|---|---|---|
| 1 | 57838 | CYLINDER, STICK - 140mm | 1 |
| 2 | 57601 | FLANGE, BLOCK ELBOW W184-16-16U CODE 62 | 2 |
| 3 | 15377 | O-RING - 1” SF (CODE 61/62) | 2 |
| 4 | 60521 | WELDMENT, CYL STK BARREL 45 DEG | 1 |
| 5 | 58031 | CABLE, CYLINDER, 15” | 2 |
| 6 | 55411 | 3/8” HEATER HOSE | AR |
| 7 | 55262 | NUT, NYLON INSERT LOCK, 3/8-24 | 4 |
| 8 | 15528 | WASHER, SAE FLAT - .375” | 4 |
| 9 | 59149 | BOLT - M12-1.75 X 60 Gr 12.9 SHC **263 RED LOCTITE™** | 8 |
| 10 | 60653 | RUBBER, CYL MANIFOLD MOUNT | 1 |
| 11 | 65855 | HOSE, HYD, 787TC38 16-16OS-16OS-SW | 1 |
| 12 | 65853 | HOSE, HYD, 787TC17 16-16OS-16O4-SW | 1 |

# T100-00221 - STICK BOOM CYLINDER COMPONENTS - 140MM BORE

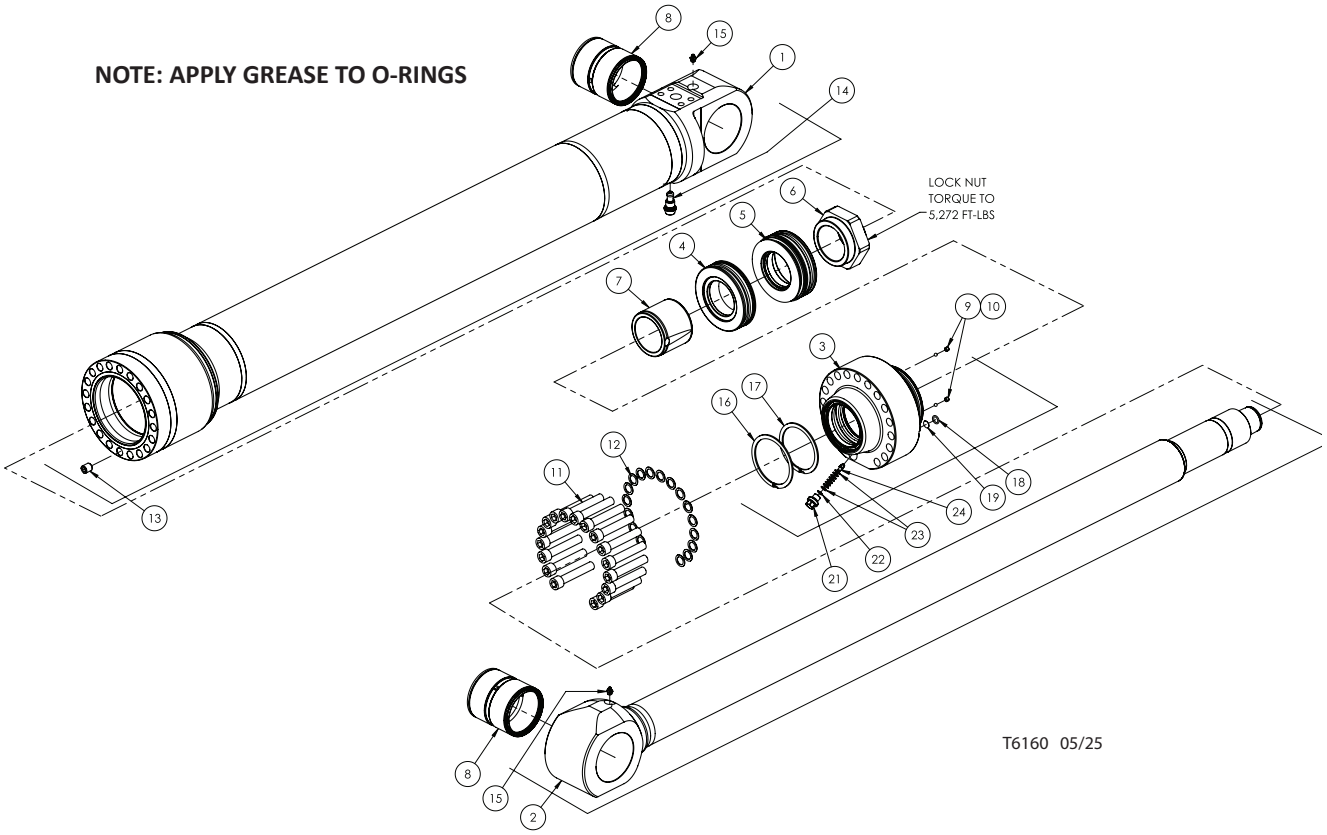


| Item | Part # | Description | Qty. |
|---|---|---|---|
| | 57838 | CYLINDER, STICK BOOM - TRACK 140MM | 1 |
| 1 | TPM140100 | BARREL ASSEMBLY **(CALL)** | 1 |
| 2 | 58293 | ROD ASSEMBLY | 1 |
| 3 | TPM140208 | GLAND **(CALL)** | 1 |
| 4 | TPM140209 | FRONT PISTON **(CALL)** | 1 |
| 5 | TPM140210 | BACK PISTON **(CALL)** | 1 |
| 6 | LNUT M75 | LOCKNUT **(CALL)** | 1 |
| 7 | TIM130317 | CUSHION SLEEVE **(CALL)** | 1 |
| 8 | 62066 | BUSHING | 2 |
| 9 | SHSS 05-18-0.250 | SET SCREW **(CALL)** | 2 |
| 10 | BALL M6 | STEEL BALL **(CALL)** | 2 |
| 11 | SHCS M16 X 90 | SHCS METRIC **(CALL)** | 17 |
| 12 | HD002049 | FLAT WASHER | 17 |
| 13 | SHSS M16 X 16 | SET SCREW **(CALL)** | 1 |
| 14 | 393000U020 | PRESSURE RELIEF w/ANTI CAV 420 BAR (6090 PSI) | 1 |
| 15 | GREASE 1/8" STR | GREASE FITTING **(CALL)** | 1 |
| 16 | WHM-425 | SPIRAL SNAP RING **(CALL)** | 2 |
| 17 | WHM-400 | SPIRAL SNAP RING **(CALL)** | 1 |
| 18 | N1470 - 112 | O-RING **(CALL)** | 1 |
| 19 | TL-C5-190-30 | TEMPERATURE LABEL | 1 |
| 20 | 57838-SK | SEAL KIT **(CALL)** | 1 |
| 21 | HD002308 | PLUG, RELIEF THREADED, SAE#6 ORB PORT | 1 |
| 22 | 0125755 | DISC SPRING .492"OD X .244"ID | 1 |
| 23 | 0123995 | DISC SPRING .500"OD X .255"ID | 8 |
| 24 | HD002306 | HIGH PRESSURE SPOOL; SHORT STEM | 1 |

# T100-00230 - STICK BOOM CYLINDER AND CYLINDER INSTALLATION

## FELLER BUNCHER AND HARVESTOR BOOM

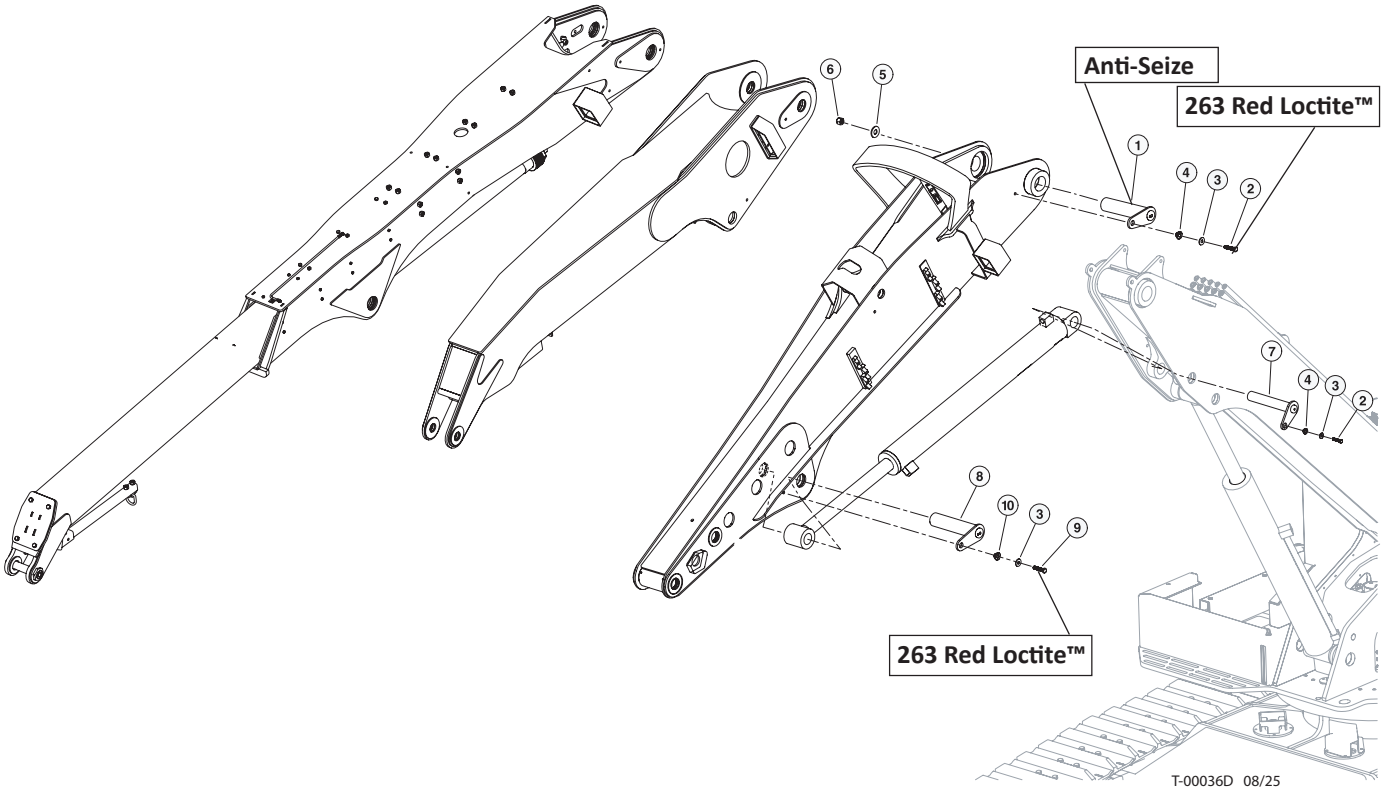


| Item | Part # | Description | Qty. |
|---|---|---|---|
| 1 | 51644 | PIN ASSEMBLY, 3.50 DIA X 21.06 (2” NUT) **ANTI-SEIZE** | 1 |
| 2 | 10775 | BOLT - 3/4” x 2.5” **263 RED LOCTITE™** | 2 |
| 3 | 15550 | WASHER, SAE flat - 3/4” | 3 |
| 4 | 54136 | WASHER, pin retaining | 2 |
| 5 | 19384 | WASHER, burned | 1 |
| 6 | 10728 | NUT, nylock - 2” | 1 |
| 7 | 60303 | PIN ASSEMBLY, 3.50 DIA X 21.06 | 1 |
| 8 | 60308 | PIN ASSY, 90MM X 12.25” (ROD STICK CLY) | 1 |
| 9 | 15549 | BOLT - .75” X 2.0 **263 RED LOCTITE™** | 1 |
| 10 | 18570 | WASHER, PIN RETAINING | 1 |

# MARKS AND PLATES - (U)

## U100-00000 - MODEL DECAL U. TL725D

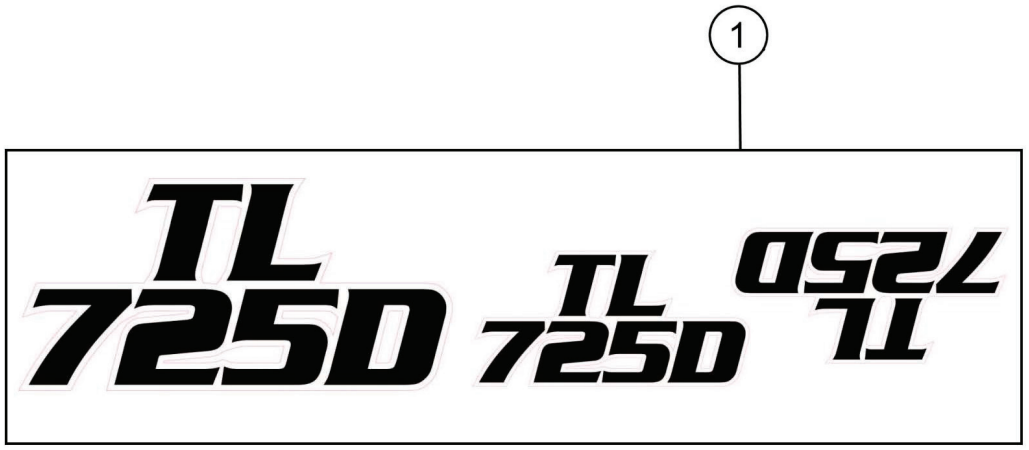


U-00001D 07/24

| Item | Part # | Description | Qty. |
|---|---|---|---|
| 1 | 57890 | DECAL, MODEL # - TL725-D | 1 |

## U100-00010 - MODEL DECAL U. TN725D

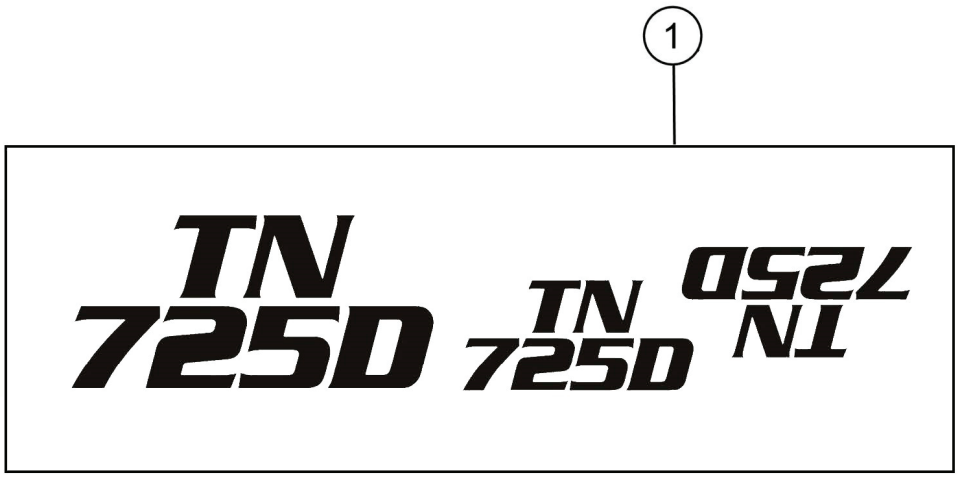


U-00002D 07/24

| Item | Part # | Description | Qty. |
|---|---|---|---|
| 1 | 57904 | DECAL, MODEL # - TN725-D | 1 |

## U100-00020 - MODEL DECAL U. TL735D

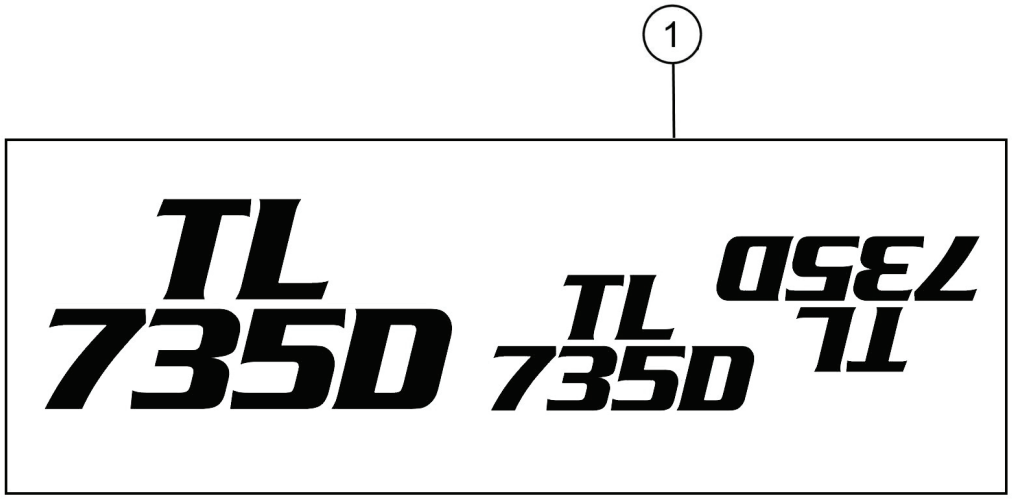


U-00003D 07/24

| Item | Part # | Description | Qty. |
|---|---|---|---|
| 1 | 57889 | DECAL, MODEL # - TL735-D | 1 |

## U100-00030 - MODEL DECAL U. TN735D

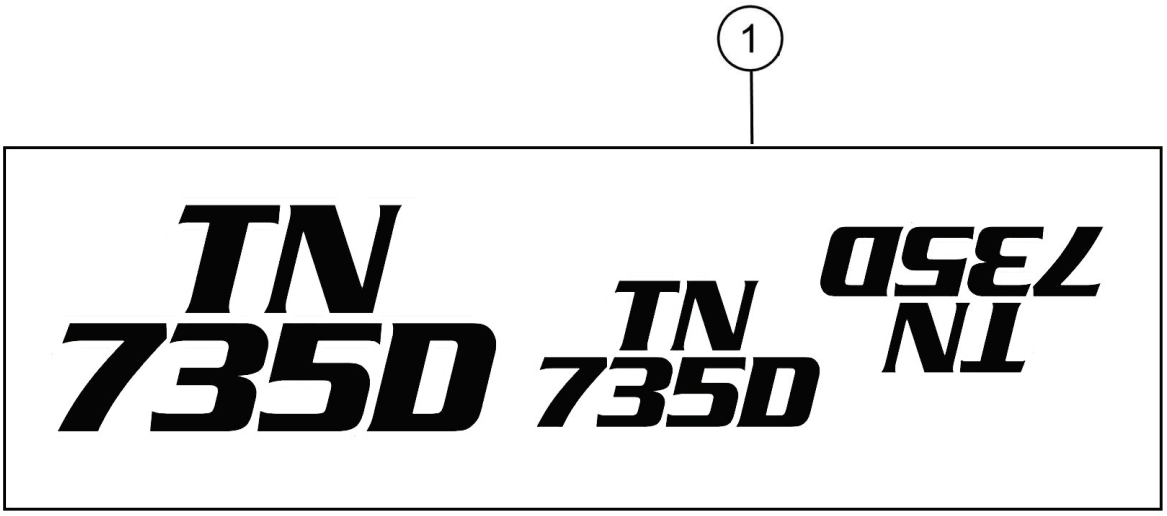


U-00004D 07/24

| Item | Part # | Description | Qty. |
|---|---|---|---|
| 1 | 57932 | DECAL, MODEL # - TN735-D | 1 |

## U100-00040 - MODEL DECAL U. TN745D

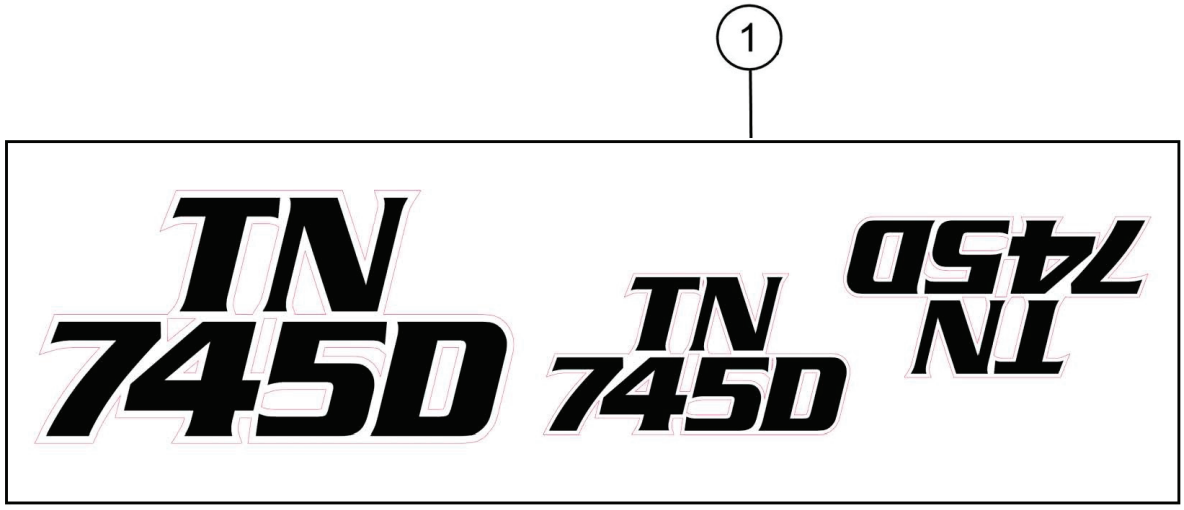


U-00006D 07/24

| Item | Part # | Description | Qty. |
|---|---|---|---|
| 1 | 57915 | DECAL, MODEL # - TN745-D | 1 |

## U100-00050 - MODEL DECAL U. TL745D

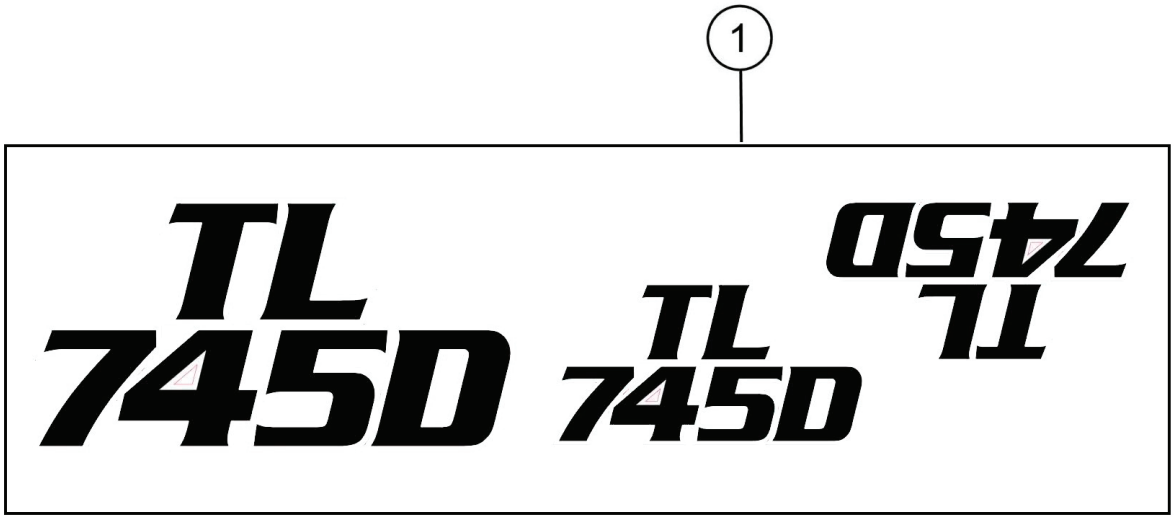


U-00005D 07/24

| Item | Part # | Description | Qty. |
|---|---|---|---|
| 1 | 57760 | DECAL, MODEL # - TL745-D | 1 |

## U100-00060 - BOOM, DECALS

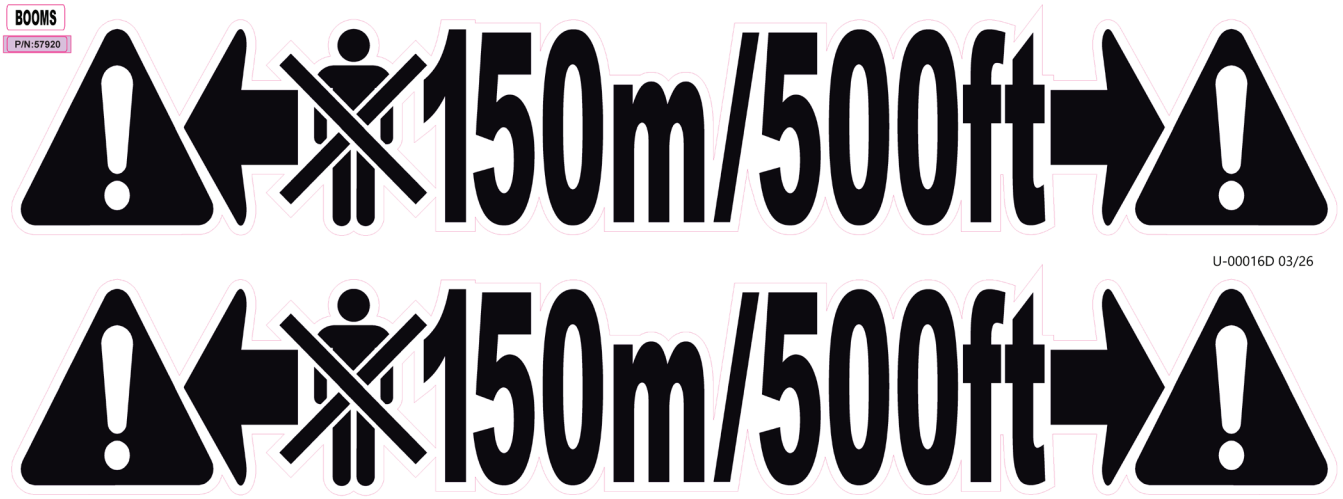


| Item | Part # | Description | Qty. |
|---|---|---|---|
| 1 | 57920 | DECAL, BOOM UNIVERSAL KEEP CLEAR | 1 |

## U100-00070 - GULLWING, DECALS




| Item | Part # | Description | Qty. |
|---|---|---|---|
| 1 | 57628 | DECAL, KEEP CLEAR GULLWING | 1 |

## U100-00080 - LOGO & WEB




| Item | Part # | Description | Qty. |
|---|---|---|---|
| 1 | 57908 | DECAL, LOGO & WEB | 1 |

# U100-00090 - DECAL, DASH

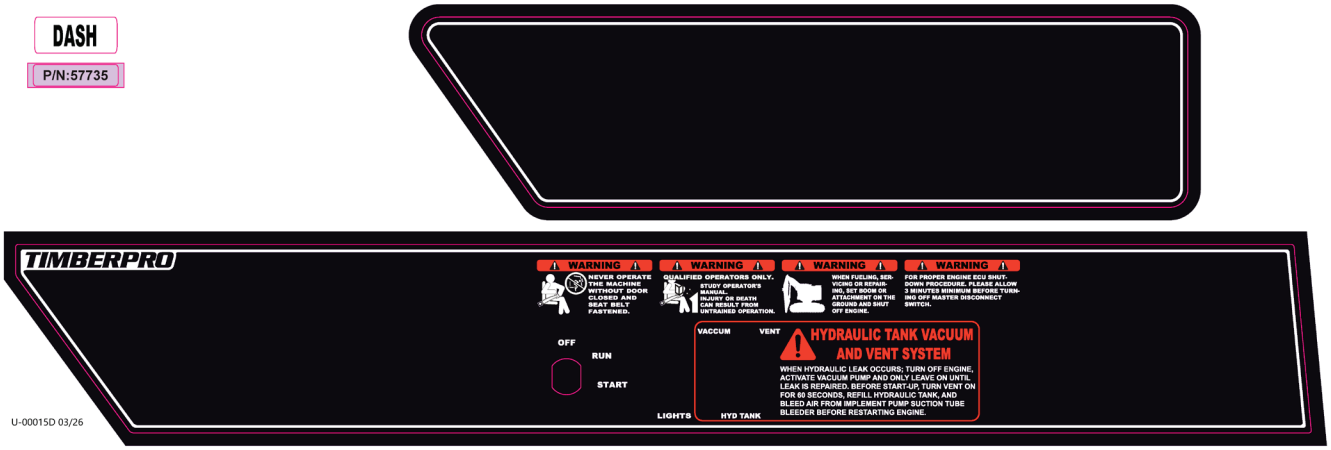


| Item | Part # | Description | Qty. |
|---|---|---|---|
| 1 | 57735 | DASH, DECAL - D SERIES, ENGLISH | 1 |
| 1 | 57735-FR | DASH, DECAL - D SERIES, FRENCH | 1 |
| 1 | 57735-GR | DASH, DECAL - D SERIES, GERMAN | 1 |
| 1 | 57735-PT | DASH, DECAL - D SERIES, PORTUGUESE | 1 |
| 1 | 57735-SP | DASH, DECAL - D SERIES, SPANISH | 1 |

# U100-00100 - CAB DECALS

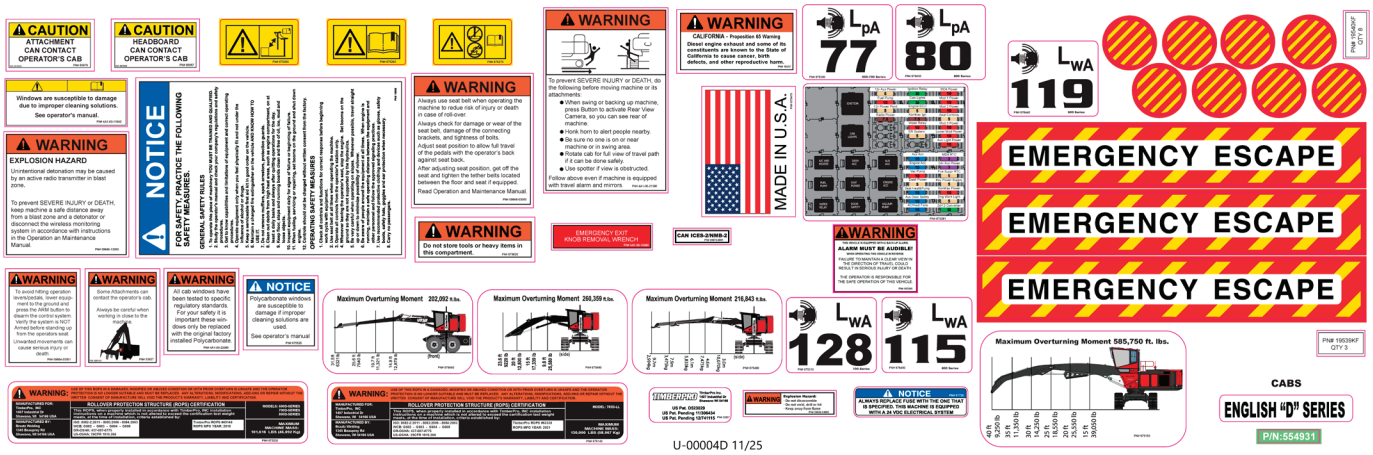


| Item | Part # | Description | Qty. |
|---|---|---|---|
| 1 | 554931 | KIT, DECAL - D SERIES COMPLETE ENGLISH, CAB | 1 |
| 1 | 554931-FR | KIT, DECAL - D SERIES COMPLETE FRENCH, CAB | 1 |
| 1 | 554931-GR | KIT, DECAL - D SERIES COMPLETE GERMAN, CAB | 1 |
| 1 | 554931-PT | KIT, DECAL - D SERIES COMPLETE PORTUGUESE, CAB | 1 |
| 1 | 554931-SP | KIT, DECAL - D SERIES COMPLETE SPANISH, CAB | 1 |

# U100-000110 - OUTSIDE DECALS




| Item | Part # | Description | Qty. |
|---|---|---|---|
| 1 | 579560 | KIT, DECAL - D SERIES COMPLETE, ENGLISH | 1 |
| 1 | 579560-FR | KIT, DECAL - D SERIES COMPLETE, FRENCH | 1 |
| 1 | 579560-GR | KIT, DECAL - D SERIES COMPLETE, GERMAN | 1 |
| 1 | 579560-PT | KIT, DECAL - D SERIES COMPLETE, PORTUGUESE | 1 |
| 1 | 579560-SP | KIT, DECAL - D SERIES COMPLETE, SPANISH | 1 |

# U100-00120 - SERIAL PLATE




U-00010D 07/24

| Item | Part # | Description | Qty. |
|---|---|---|---|
| 1 | 58964 | PLACARD, SERIAL NUMBER - USA/CANADA | 1 |

# MISCELLANEOUS- (W)

# W100-00010 - ESPAR HEATER

**NOTE: HYDRAULIC FITTINGS GET 545 LOCTITE™**

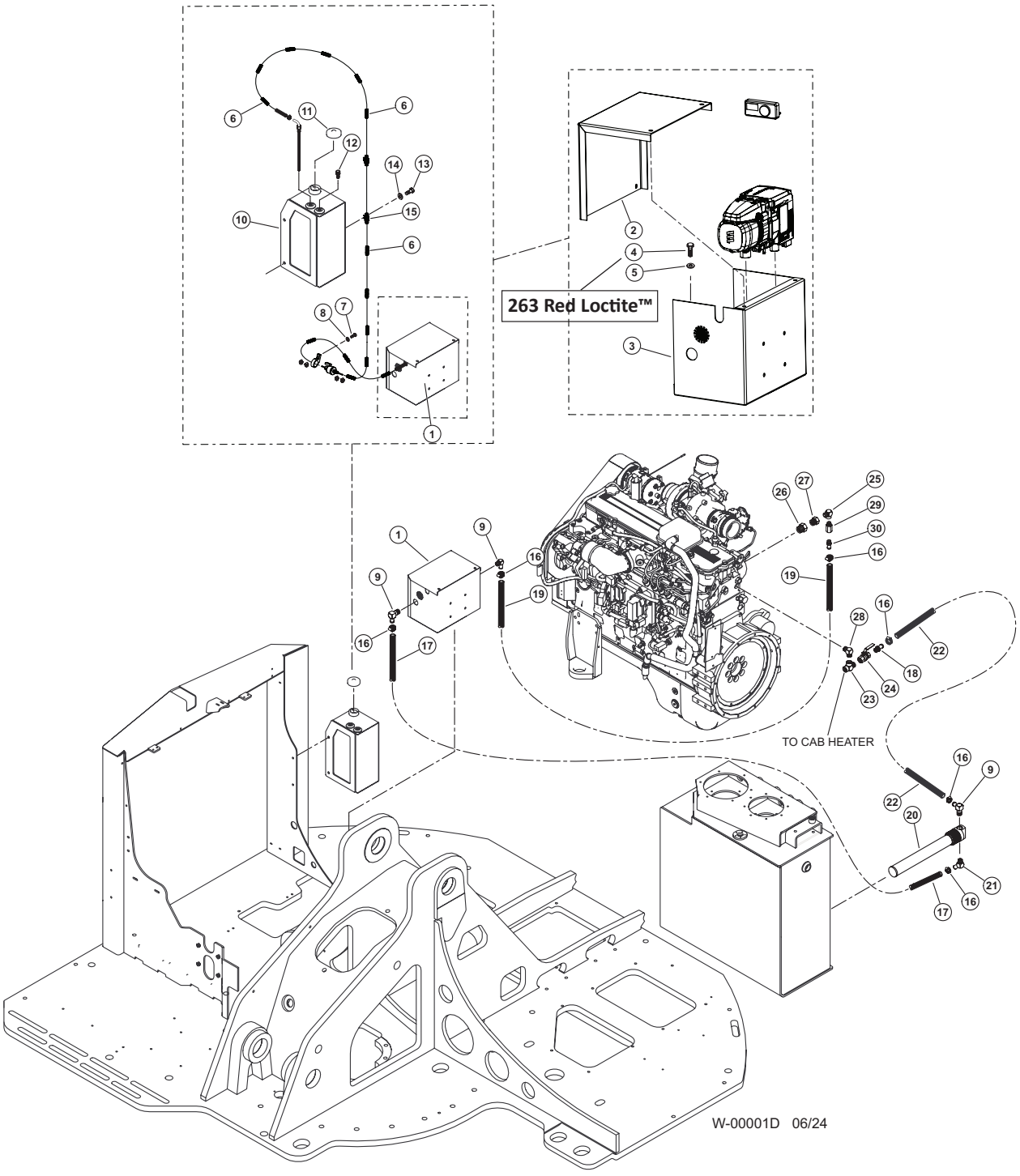




**2222500**
**2236900**

# W100-00010 - ESPAR HEATER

| Item | Part # | Description | Qty. |
|---|---|---|---|
| 1 | 61249 | PREHEATER, ESPAR | 1 |
| 2 | 60727 | LID, ESPAR | 1 |
| 3 | 60726 | BOX, ESPAR MOUNT | 1 |
| 4 | 15589 | BOLT - .3125" X 1" **263 RED LOCTITE™** | 4 |
| 5 | 10801 | WASHER, FLAT - .3125" | 4 |
| 6 | 16705 | LOOM, SPLIT - .25" GREEN (BULK) | AR |
| 7 | 15604 | BOLT - .25" X .75" | 2 |
| 8 | 10800 | WASHER, FLAT - .25" | 2 |
| 9 | 52436 | ELBOW, 90 BEADED HOSE BARB 10-8 | 3 |
| 10 | 46673 | TANK, ESPAR FUEL - C/D SERIES | 1 |
| 11 | 52965 | CAP, WEBASTO/ESPAR FUEL TANK-REPAIR | 1 |
| 12 | 22906 | BREATHER, FUEL TANK | 1 |
| 13 | 15542 | BOLT - .375" X .75" | 2 |
| 14 | 15528 | WASHER, SAE FLAT - .375" OR 3/8" | 2 |
| 15 | 59128 | CABLE CLAMP, CUSHIONED, 1/2" (.406") | 2 |
| 16 | 58977 | CLAMP, HOSE - AC UPDATE | 1 |
| 17 | 58123 | HOSE, HEATER 5/8 X 94 D-MOD ESPAR | 1 |
| | 20810 | SLEEVE, PROTECTIVE HOSE - 075 | 1 |
| 18 | 51774 | CONNECTOR, STR HOSE BARB - .5 X 5/8 (830 | 1 |
| 19 | 58024 | HOSE, HEATER - 5/8" X 64" (GATES 28473) | 1 |
| | 50188 | SLEEVE, PROTECTIVE HOSE - 150 | 1 |
| 20 | 51614 | HEATER, ELEMENT 16" HYD TANK-TRANSPORT | 1 |
| 21 | 57805 | FITTING, 179HB-10-8 | 1 |
| 22 | 52738 | HOSE, HEATER - 5/8" X 80" WRAPPED | 1 |
| 23 | 51879 | TEE, RUN - .5" (1/2 MR0-S) | 1 |
| 24 | 51714 | VALVE, BALL - WATER SHUT OFF HEATER 1/2" | 1 |
| 25 | 52786 | ELBOW, 90° STREET -½ X 3/8 CD-S | 1 |
| 26 | M27-12F8OHG5S | BUSHING, REDUCER | 1 |
| 27 | 51780 | BUSHING, REDUCER - 12-1/2 FILL PUMP (830 | 1 |
| 28 | 52785 | ELBOW, MALE PIPE - ¾ X ½ CR-S | 1 |
| 29 | 15652 | VALVE, CHECK - HYDRAULIC/FUEL | 1 |
| 30 | 51502 | NIPPLE, KING - .38NPT X .63 HOSE | 1 |

# W100-00011 - ESPAR HEATER COMPONENTS

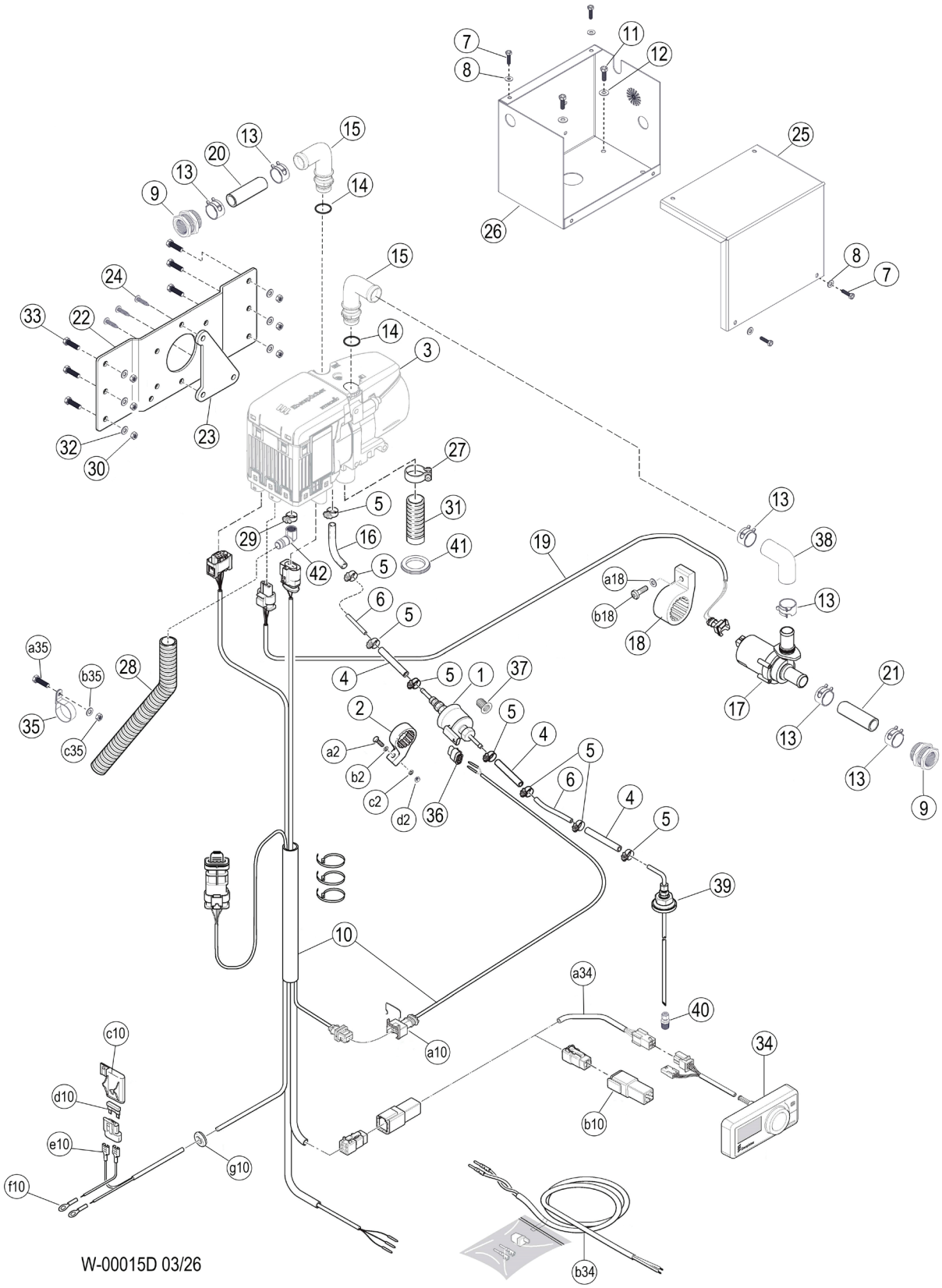

# W100-00011 - ESPAR HEATER COMPONENTS

| Item | Part # | Description | Qty. |
|---|---|---|---|
| 1 | 56569 | FUEL METERING PUMP, 24 V | 1 |
| 2 | 705520 | FMP MOUNT BRACKET | 1 |
| a2 | - | a = INCLUDED WITH PRIMARY NUMBER | 1 |
| b2 | - | b = INCLUDED WITH PRIMARY NUMBER | 1 |
| c2 | - | c = INCLUDED WITH PRIMARY NUMBER | 1 |
| d2 | - | d = INCLUDED WITH PRIMARY NUMBER | 1 |
| 3 | 56401 | D6 HEATER ASSEMBLY | 1 |
| 4 | 53437 | HOSE 3.5MM X 301MM | 3 |
| 5 | 702480 | HOSE CLIP, 9 MM | 8 |
| 6 | 705530 | PIPE, 4 X 1 VW TL 524 35-A, BLACK | 2 |
| 7 | 23264 | BOLT - .25" X .5" | 4 |
| 8 | 10800 | WASHER, FLAT - .25" | 4 |
| 9 | 705310 | COOLANT BULK HEAD FITTING | 2 |
| 10 | 705320 | CABLE HARNESS | 1 |
| a10 | - | a = INCLUDED WITH PRIMARY NUMBER | 1 |
| b10 | - | b = INCLUDED WITH PRIMARY NUMBER | 1 |
| c10 | - | c = INCLUDED WITH PRIMARY NUMBER | 1 |
| d10 | - | d = INCLUDED WITH PRIMARY NUMBER | 1 |
| e10 | - | e = INCLUDED WITH PRIMARY NUMBER | 2 |
| f10 | - | f = INCLUDED WITH PRIMARY NUMBER | 2 |
| g10 | - | g = INCLUDED WITH PRIMARY NUMBER | 1 |
| 11 | 15589 | BOLT - .3125" X 1" | 2 |
| 12 | 10801 | WASHER, FLAT - .3125" | 2 |
| 13 | 705330 | CLAMPS, CONSTANT TENSION | 6 |
| 14 | 700030 | O-RING, 16 X 2 | 2 |
| 15 | 700110 | 90 DEGREE ELBOW W/O-RING | 2 |
| 16 | 53469 | ADAPTER HOSE 4.5 / 3.5 MM | 1 |
| 17 | 55988 | WATER PUMP 24V | 1 |
| 18 | 705490 | BRACKET WATER PUMP | 1 |
| a18 | - | a = INCLUDED WITH PRIMARY NUMBER | 1 |
| b18 | - | b = INCLUDED WITH PRIMARY NUMBER | 1 |
| 19 | 705340 | WATER PUMP WIRE HARNESS | 1 |
| 20 | 705350 | 5" COOLANT HOSE | 1 |
| 21 | 705360 | 2.75" COOLANT HOSE | 1 |
| 22 | 700180 | HEATER MOUNTING BRACKET | 1 |
| 23 | 700080 | SPACER DAMPENING PLATE | 1 |
| 24 | 700020 | SCREW, M6×16, THREAD FORMING | 3 |
| 25 | 705470 | LID, BOX, POWDER COATED GREY ENCLOSURE | 1 |

# W100-00011 - ESPAR HEATER COMPONENTS

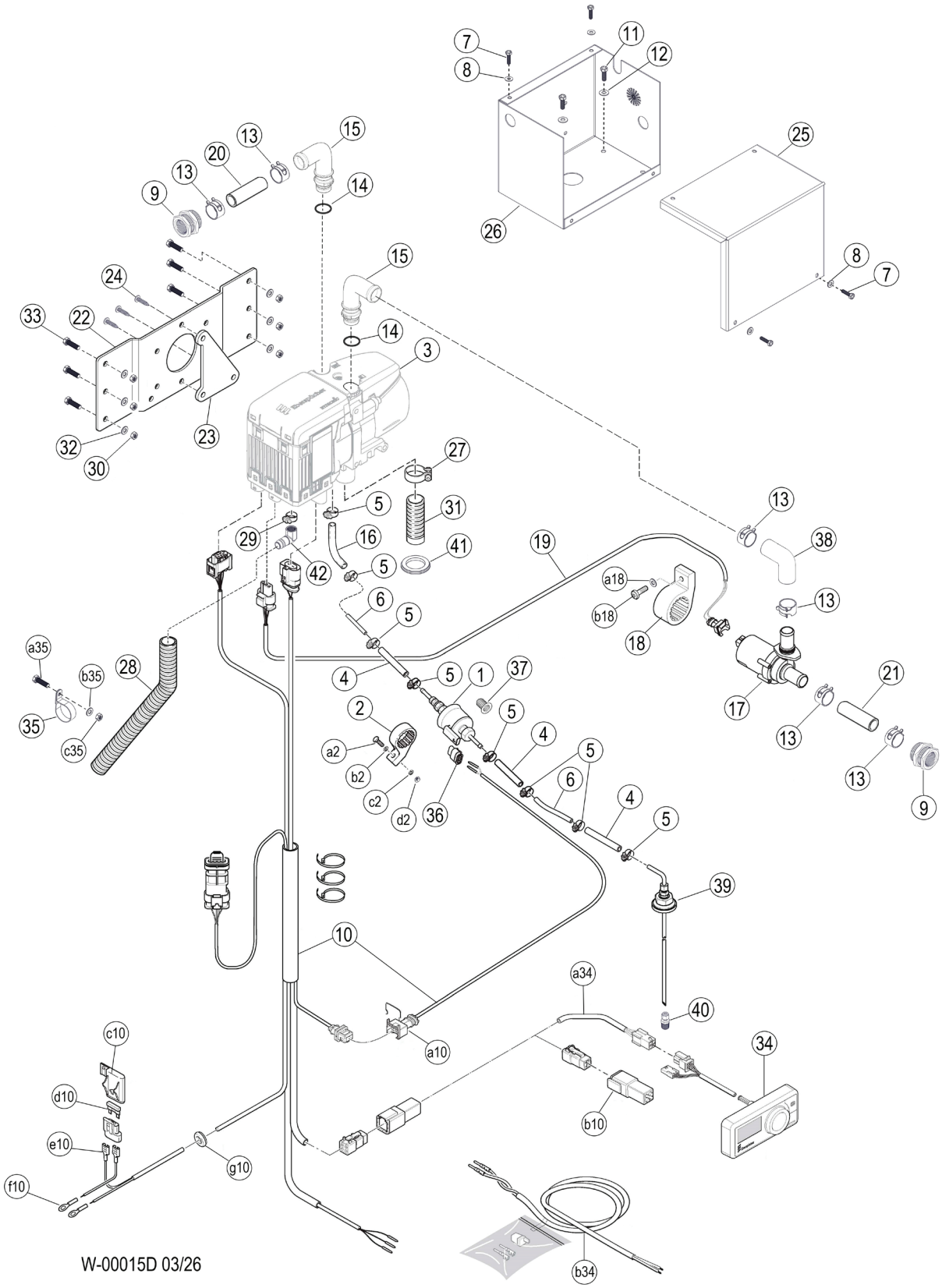

# W100-00011 - ESPAR HEATER COMPONENTS

| Item | Part # | Description | Qty. |
|---|---|---|---|
| 26 | 705460 | BOX, POWDER COATED GREY ENCLOSURE BOX | 1 |
| 27 | 700060 | EXHAUST CLAMP 26-28MM | 1 |
| 28 | 705370 | AIR INTAKE TUBE | 1 |
| 29 | 700040 | HOSE CLIP, 16 – 25 MM | 1 |
| 30 | 705450 | M6 NUT | 6 |
| 31 | 701060 | EXHAUST TUBE W/SLEEVE END | 1 |
| 32 | 705440 | M6 WASHER | 6 |
| 33 | 705430 | BOLT, M6 X 20 | 6 |
| 34 | 58369 | EASY START PRO TIMER | 1 |
| a34 | - | a = INCLUDED WITH PRIMARY NUMBER | 1 |
| b34 | - | b = INCLUDED WITH PRIMARY NUMBER | 1 |
| 35 | 700490 | CLIP, 28MM | 1 |
| a35 | - | a = INCLUDED WITH PRIMARY NUMBER | 1 |
| b35 | - | b = INCLUDED WITH PRIMARY NUMBER | 1 |
| 36 | 700500 | CONNECTOR METERING PUMP | 1 |
| 37 | 56524 | STRAINER, FUEL METERING PUMP | 1 |
| 38 | 705380 | MOLDED ELBOW HOSE | 1 |
| 39 | 53394 | FUEL DRAWTUBE | 1 |
| 40 | 53395 | FITTING, COMPRESSION | 1 |
| 41 | 705400 | SILICONE EXHAUST SEAL | 1 |
| 42 | 705410 | COMBUSTION AIR ELBOW | 1 |

# W200-00020 - HYD TANK FILL PUMP

**NOTE: HYDRAULIC FITTINGS GET 545 LOCTITE™**

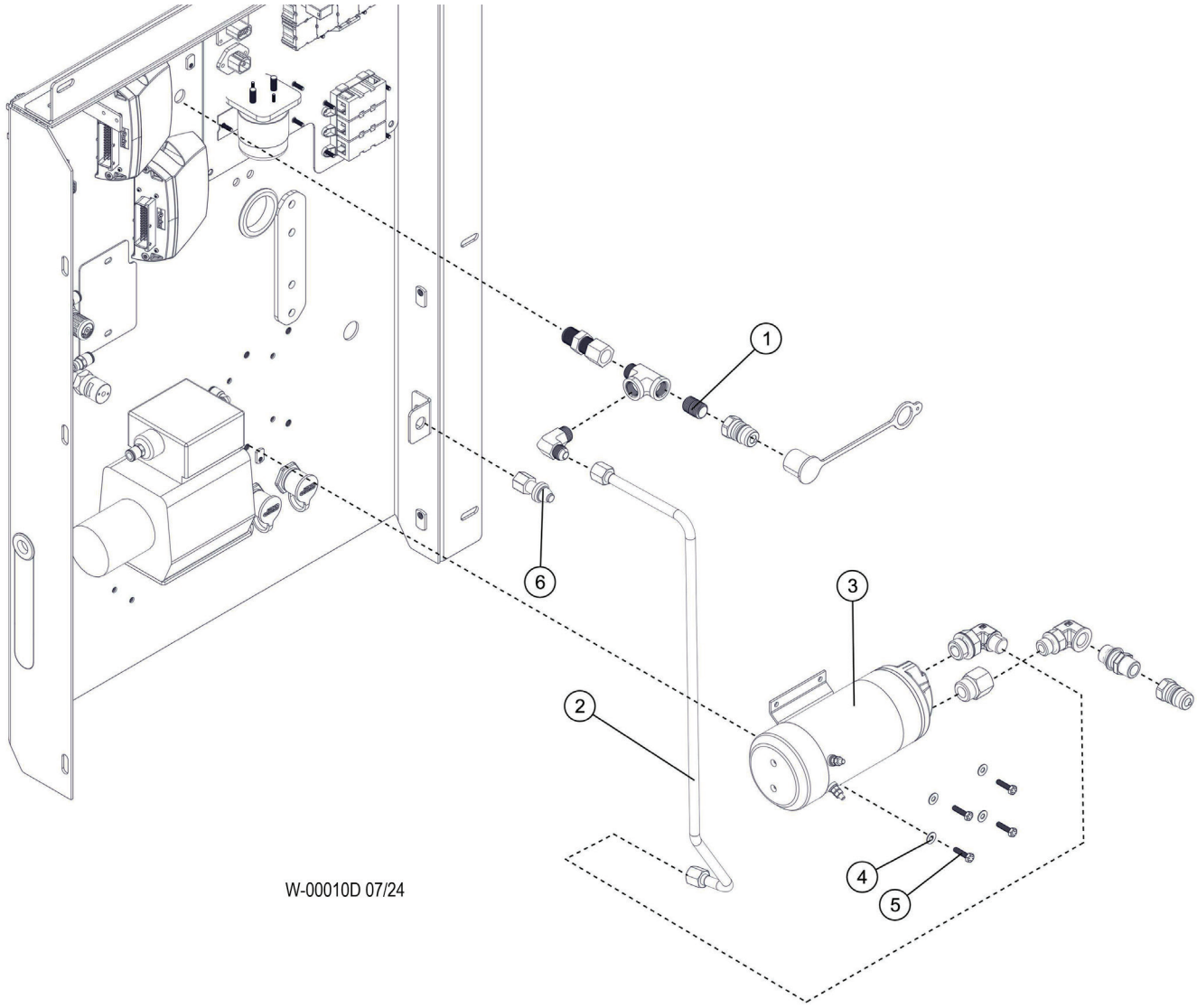

# W200-00020 - HYD TANK FILL PUMP

| Item | Part # | Description | Qty. |
|---|---|---|---|
| 1 | 16126 | NIPPLE, CLOSE - 1/2” | 1 |
| 2 | 57664 | TUBELINE, FILL PUMP | 1 |
| 3 | 55691 | FILL PUMP ASSEMBLY | 1 |
| 4 | 10757 | WASHER, FLAT - .25” | 4 |
| 5 | 23264 | BOLT - .25” X .5” | 4 |
| 6 | 25104 | SWITCH, DOOR LIMIT/FILL PUMP | 1 |

# W300-00030 - DAFO DISTRIBUTION COMPONENTS

**NOTE: HYDRAULIC FITTINGS GET 545 LOCTITE™**

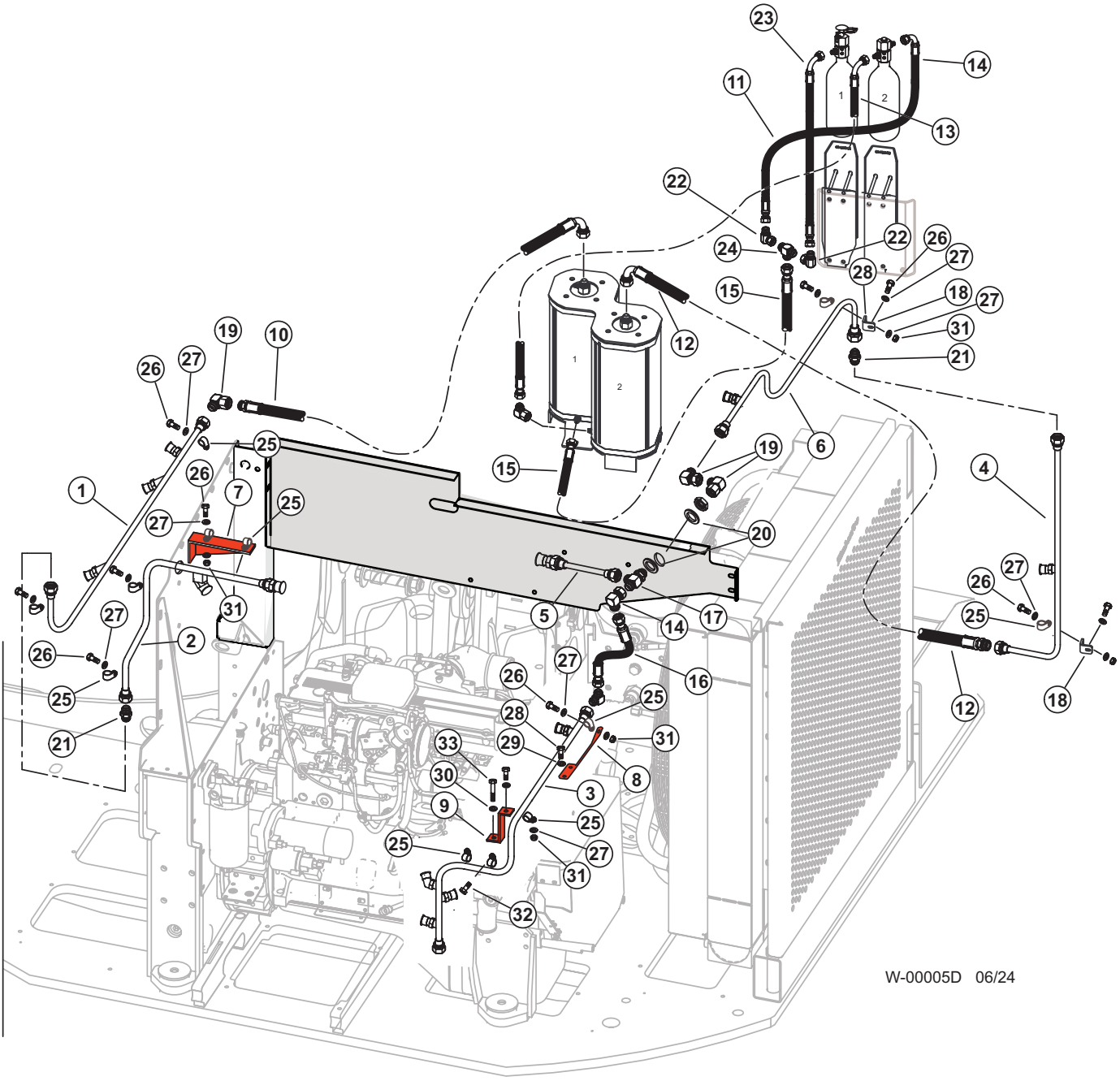

# W300-00030 - DAFO DISTRIBUTION COMPONENTS

| Item | Part # | Description | Qty. |
|---|---|---|---|
| 1 | 674080 | DISTRIBUTION RUN 2, SECTION 1 | 1 |
| 2 | 674791 | DISTRIBUTION RUN 2, SECTION 2 | 1 |
| 3 | 674070 | DISTRIBUTION RUN 1, SECTION 4 | 1 |
| 4 | 674040 | DISTRIBUTION RUN 1, SECTION 1 | 1 |
| 5 | 674060 | DISTRIBUTION RUN 1, SECTION 3 | 1 |
| 6 | 674050 | DISTRIBUTION RUN 1, SECTION 2 | 1 |
| 7 | 65472 | PLATE, FS BRACKET | 1 |
| 8 | 61637 | PLATE, NOZZLE MT, FRT ENG | 1 |
| 9 | 61617 | PLATE, FS MT | 1 |
| 10 | 674160 | AGENT SUPPLY HOSE 1/2” X 117” | 1 |
| 11 | 674100 | N2 SUPPLY HOSE 1/4”X 16” | 1 |
| 12 | 674140 | AGENT SUPPLY HOSE 1/2” X 10.5” | 1 |
| 13 | 674120 | N2 SUPPLY HOSE 1/4” X 36” | 1 |
| 14 | 674370 | COUPLING, 90° BEND, M-M | 1 |
| 15 | 674130 | N2 SUPPLY HOSE 1/4” X 49” | 1 |
| 16 | 674150 | AGENT SUPPLY HOSE 1/2” X 19” | 1 |
| 17 | 674400 | T-COUPLING, ADJUSTABLE ARM, M-F-M | 2 |
| 18 | 46421 | BRACKET, COOLER LINE SUPPORT | 1 |
| 19 | 674380 | COUPLING, 90° BEND, M-F | 2 |
| 20 | 10718 | 7/8” FLAT WASHER | 3 |
| 21 | 674360 | COUPLING, STRAIGHT, M-M | 2 |
| 22 | 674330 | ELBOW ADAPTER, ¼”M X ¼”F | 2 |
| 23 | 674110 | N2 SUPPLY HOSE 1/4” X 13.5” | 2 |
| 24 | 674340 | T-ADAPTOR, ¼”M X ¼”M X ¼”M | 1 |
| 25 | 674470 | 14MM P CLAMP FOR 1/4 HOSE | 1 |
| 26 | 15576 | BOLT - .25” X 1” | 13 |
| 27 | 10757 | WASHER, FLAT - .25” | 12 |
| 28 | 80517 | BOLT - 10MM-1.5P X 20MM | 12 |
| 29 | 15528 | WASHER, SAE FLAT - .375” OR 3/8” | 1 |
| 30 | NA | (INCLUDED WITH ENGINE) | 1 |
| 31 | 10811 | NUT, LOCK - .25” | 1 |
| 32 | NA | (INCLUDED WITH ENGINE) | 6 |
| 33 | NA | (INCLUDED WITH ENGINE) | 1 |
| * | 674510 | 11 MM P-CLAMPS, WIDE POST | 11 |
| * | 679780 | 6MM P-CLAMPS, WIDE POST | 4 |
| * | 679790 | ADAPTOR STEEL G1/4" (RUF-RUF) | 1 |
| * | 679810 | STRAP DOUBLE, 8MM BLACK | 8 |
| * | 674500 | LABEL KIT FOR SUPPRESSION SYSTEM, ENGLISH | 1 |

***MEANS NOT SHOWN**

# W300-00040 - DAFO DISTRIBUTION, DETECTION / ACTUATION CABLE INSTALLATION

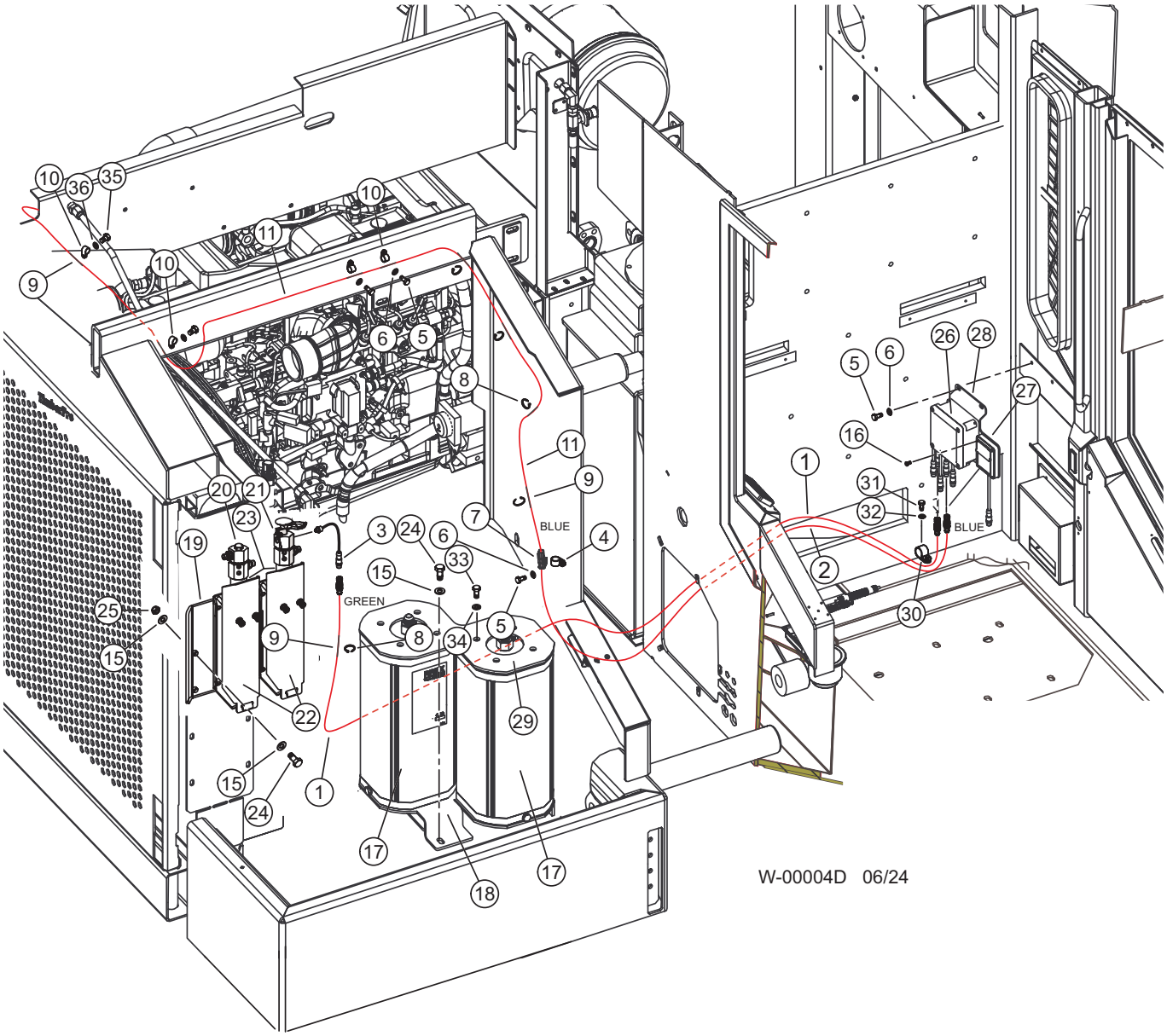

# W300-00040 - DAFO DISTRIBUTION, DETECTION / ACTUATION CABLE INSTALLATION

| Item | Part # | Description | Qty. |
|---|---|---|---|
| 1 | 674020 | CABLE, ACTUATION CIRCUIT, (GREEN) | 1 |
| 2 | 674010 | CABLE, M12, DETECTOR, (BLUE) | 1 |
| 3 | 674170 | GAS GENERATOR W. 200 MM CABLE & 3-POLE CONNECTOR | 1 |
| 4 | 674480 | 18MM P CLAMP USED TO ATTACH DEUTSCH AND EOL | 1 |
| 5 | 15604 | BOLT - .25” X .75” | 7 |
| 6 | 10757 | WASHER, SAE FLAT - .25” | 7 |
| 7 | NSS | DEUTSCH CONNECTOR | 1 |
| 8 | Double Tie-wrap | SECURING LTD TO DISTRIBUTION TUBING | 25 |
| 9 | 674430 | RUBBER PROTECTORS FOR LTD CABLE | 25 |
| 10 | 674460 | 8MM P CLAMP FOR LTD | 4 |
| 11 | 674290 | LINEAR DETECTION WIRE 180°C W/ 1.8 K OHM EOL RESISTOR | 1 |
| 12 | 10811 | NUT, LOCK - .25” | 2 |
| 13 | (CALL) | SECURING LTD ON BACK OF MACHINE | 2 |
| 14 | 10731 | BOLT - .375” X 1.5” | 2 |
| 15 | 10802 | WASHER, FLAT - .375” | 6 |
| 16 | 59126 | SCREW, 8-32 x 1 PAN HEAD | 4 |
| 17 | 650520 | FORREX CONTAINER SV-K 10 9,7 LITRE, EVO | 2 |
| 18 | 65046 | PLATE, DAFO 10L BASE | 1 |
| * | 61622 | PLATE, FS MT | 1 |
| 19 | 65053 | PLATE, DAFO NITRO BOTTLE MT | 1 |
| 20 | 674200 | PNEUMATIC/ELECTRIC RELEASE DEVICE | 1 |
| 21 | 65051 | PNEUMATIC/MECHANICAL/ELECTRIC RELEASE DEVICE | 1 |
| 22 | 65049 | NITROGEN CARTRIDGE BRACKETS | 2 |
| 23 | 674320 | NITROGEN CARTRIDGE N10B | 2 |
| 24 | 11707 | BOLT - .375” X 1” | 4 |
| 25 | 10813 | NUT, LOCK - .375” | 2 |
| 26 | 674280 | CONTROL UNIT, CV-X, GEN II | 1 |
| 27 | 65054 | ALARM PANEL CV-X | 1 |
| 28 | 674310 | BATTERY 9V, LITHIUM TYPE CR-V9-DV+ | 1 |
| * | 65056 | PLATE, DAFO CONTROL PANEL | 1 |
| 29 | 65047 | PLATE, DAFO 10L TOP | 1 |
| 30 | 59091 | P-CLIP, 1.0 ID, CUSHIONED | 3 |
| 31 | 15605 | BOLT - .3125” X .75” | 3 |
| 32 | 15559 | WASHER, SAE FLAT - .3125” | 3 |
| 33 | 59124 | BOLT, M12-1.75 x 30, HHC, CL8.8 | 8 |
| 34 | 15534 | WASHER, SAE FLAT - .5” | 8 |
| 35 | 15542 | BOLT - .375” X .75” | 1 |
| 36 | 15528 | WASHER, SAE FLAT - .375” OR 3/8” | 1 |
| * | 679800 | ALARM PANEL SEALING KIT | 1 |
| * | 674000 | CABLE, POWER/SHUTDOWN, (RED/WHITE) | 1 |
| * | 674351 | RUBBER COATED STEEL WASHER 1/4'', 13,7X2 | 1 |
| * | 674030 | CABLE, ALARM CIRCUIT, (YELLOW) | 1 |
| * | 674260 | CONNECTOR CAN-BUS MALE-FMALE WITH 120 OHM RESISTOR | 1 |

***MEANS NOT SHOWN**

# W300-00050 - DAFO DISTRIBUTION, DETECTION / ACTUATION CABLE INSTALLATION

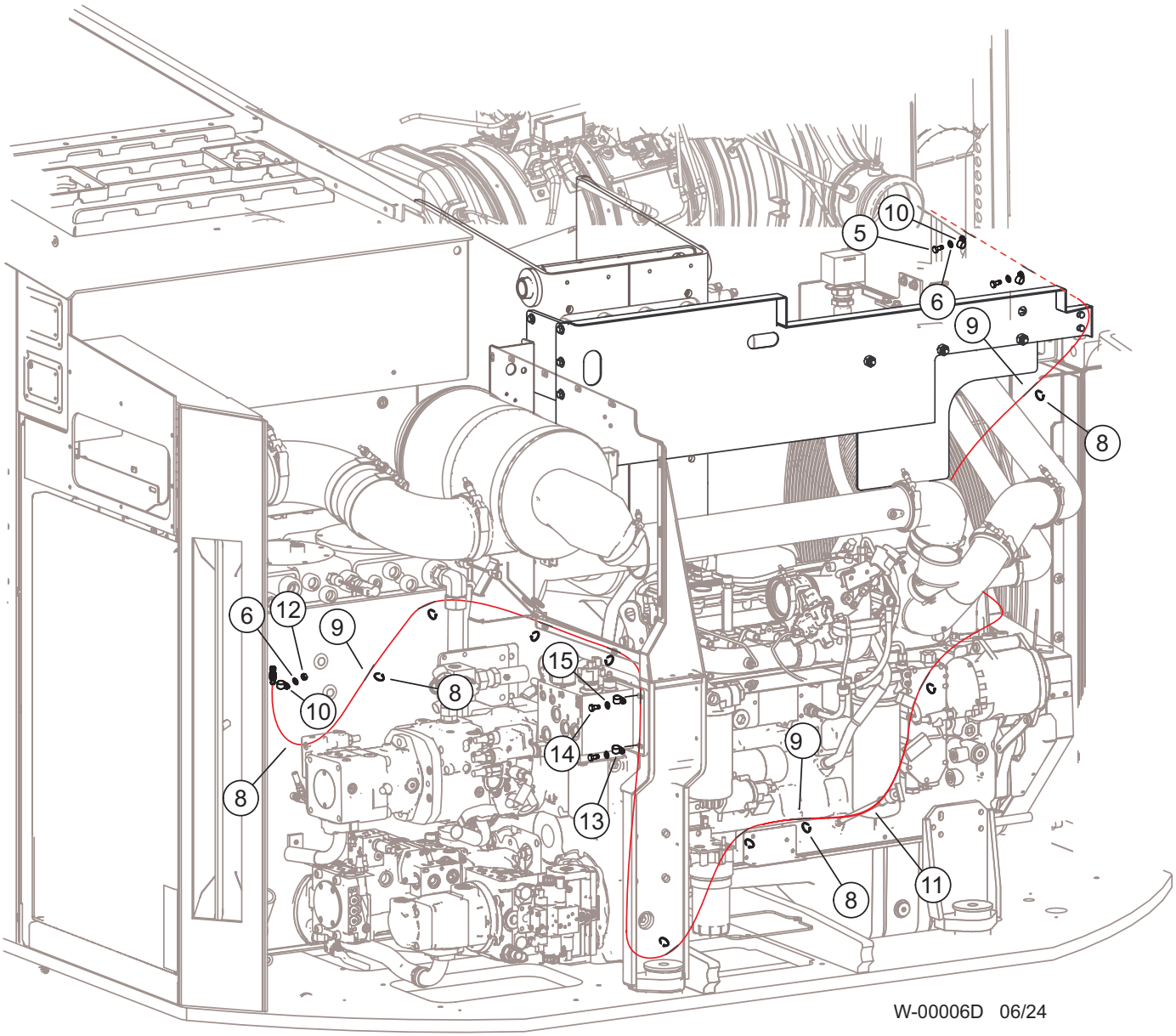

# W300-00050 - DAFO DISTRIBUTION, DETECTION / ACTUATION CABLE INSTALLATION

| Item | Part # | Description | Qty. |
|---|---|---|---|
| 1 | 674020 | CABLE, ACTUATION CIRCUIT, (GREEN) | 1 |
| 2 | 674010 | CABLE, M12, DETECTOR, (BLUE) | 1 |
| 3 | 674170 | GAS GENERATOR W. 200 MM CABLE & 3-POLE CONNECTOR | 1 |
| 4 | 674480 | 18MM P CLAMP USED TO ATTACH DEUTSCH AND EOL | 1 |
| 5 | 15604 | BOLT - .25” X .75” | 7 |
| 6 | 10757 | WASHER, SAE FLAT - .25” | 7 |
| 7 | NSS | DEUTSCH CONNECTOR | 1 |
| 8 | Double Tie-wrap | SECURING LTD TO DISTRIBUTION TUBING | 25 |
| 9 | 674430 | RUBBER PROTECTORS FOR LTD CABLE | 25 |
| 10 | 674460 | 8MM P CLAMP FOR LTD | 4 |
| 11 | 674290 | LINEAR DETECTION WIRE 180°C W/ 1.8 K OHM EOL RESISTOR | 1 |
| 12 | 10811 | NUT, LOCK - .25” | 2 |
| 13 | (CALL) | SECURING LTD ON BACK OF MACHINE | 2 |
| 14 | 10731 | BOLT - .375” X 1.5” | 2 |
| 15 | 10802 | WASHER, FLAT - .375” | 6 |
| 16 | 59126 | SCREW, 8-32 x 1 PAN HEAD | 4 |
| 17 | 65052 | SV-K 10L Agent Container, AB-50 | 2 |
| 18 | 65046 | PLATE, DAFO 10L BASE | 1 |
| * | 61622 | PLATE, FS MT | 1 |
| 19 | 65053 | PLATE, DAFO NITRO BOTTLE MT | 1 |
| 20 | 674200 | PNEUMATIC/ELECTRIC RELEASE DEVICE | 1 |
| 21 | 65051 | PNEUMATIC/MECHANICAL/ELECTRIC RELEASE DEVICE | 1 |
| 22 | 65049 | NITROGEN CARTRIDGE BRACKETS | 2 |
| 23 | 674320 | NITROGEN CARTRIDGE N10B | 2 |
| 24 | 11707 | BOLT - .375” X 1” | 4 |
| 25 | 10813 | NUT, LOCK - .375” | 2 |
| 26 | 65048 | CONTROL UNIT, CV-01/CK, EXCL BATTERY | 1 |
| 27 | 674300 | ALARM PANEL CV-01 BK/CK, ENGLISH | 1 |
| 28 | 674310 | BATTERY 9V, LITHIUM TYPE CR-V9-DV+ | 1 |
| * | 65056 | PLATE, DAFO CONTROL PANEL | 1 |
| 29 | 65047 | PLATE, DAFO 10L TOP | 1 |
| 30 | 59091 | P-CLIP, 1.0 ID, CUSHIONED | 3 |
| 31 | 15605 | BOLT - .3125” X .75” | 3 |
| 32 | 15559 | WASHER, SAE FLAT - .3125” | 3 |
| 33 | 59124 | BOLT, M12-1.75 x 30, HHC, CL8.8 | 8 |
| 34 | 15534 | WASHER, SAE FLAT - .5” | 8 |
| 35 | 15542 | BOLT - .375” X .75” | 1 |
| 36 | 15528 | WASHER, SAE FLAT - .375” OR 3/8” | 1 |

***MEANS NOT SHOWN**

# W300-00045 - DAFO DISTRIBUTION, THERMAL BLANKET

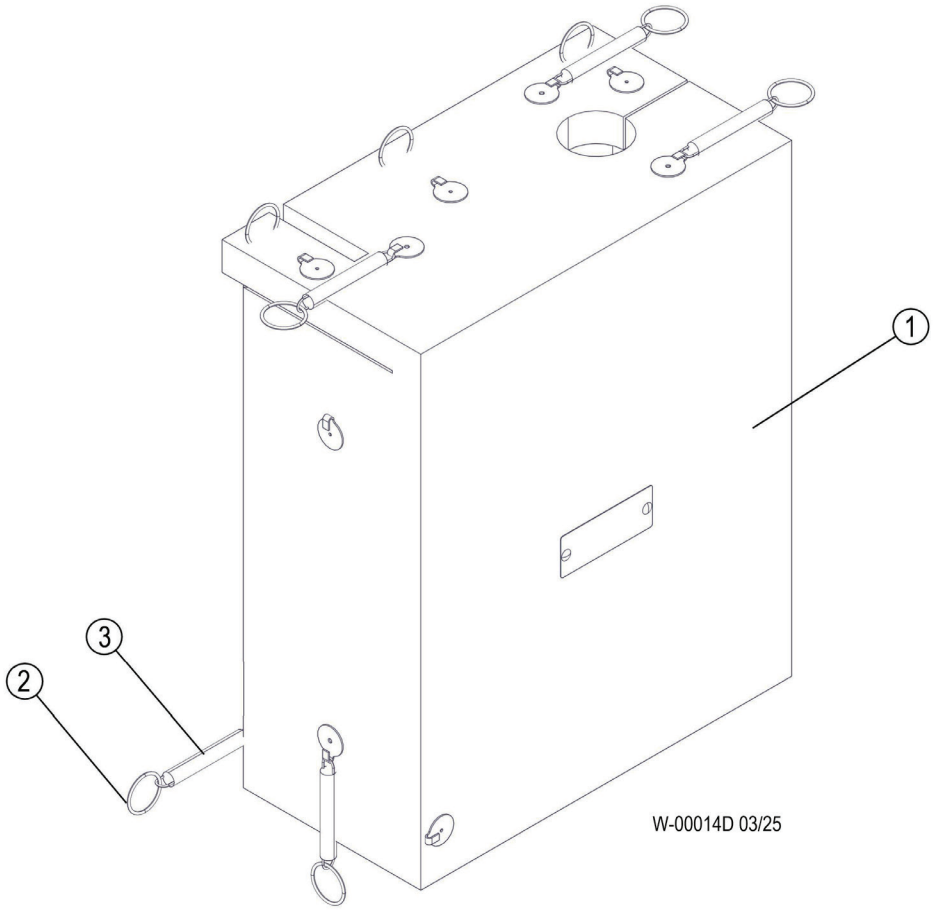


| Item | Part # | Description | Qty. |
|---|---|---|---|
| 1 | 644080 | INSULATION, DUAL NO2 BOTTLES | 1 |
| * | 40-9003 | RING (CALL) | 11 |
| * | 32-1509 | 3” SPRING (CALL) | 11 |

# W400-00060 - HYD TANK VACUUM PUMP

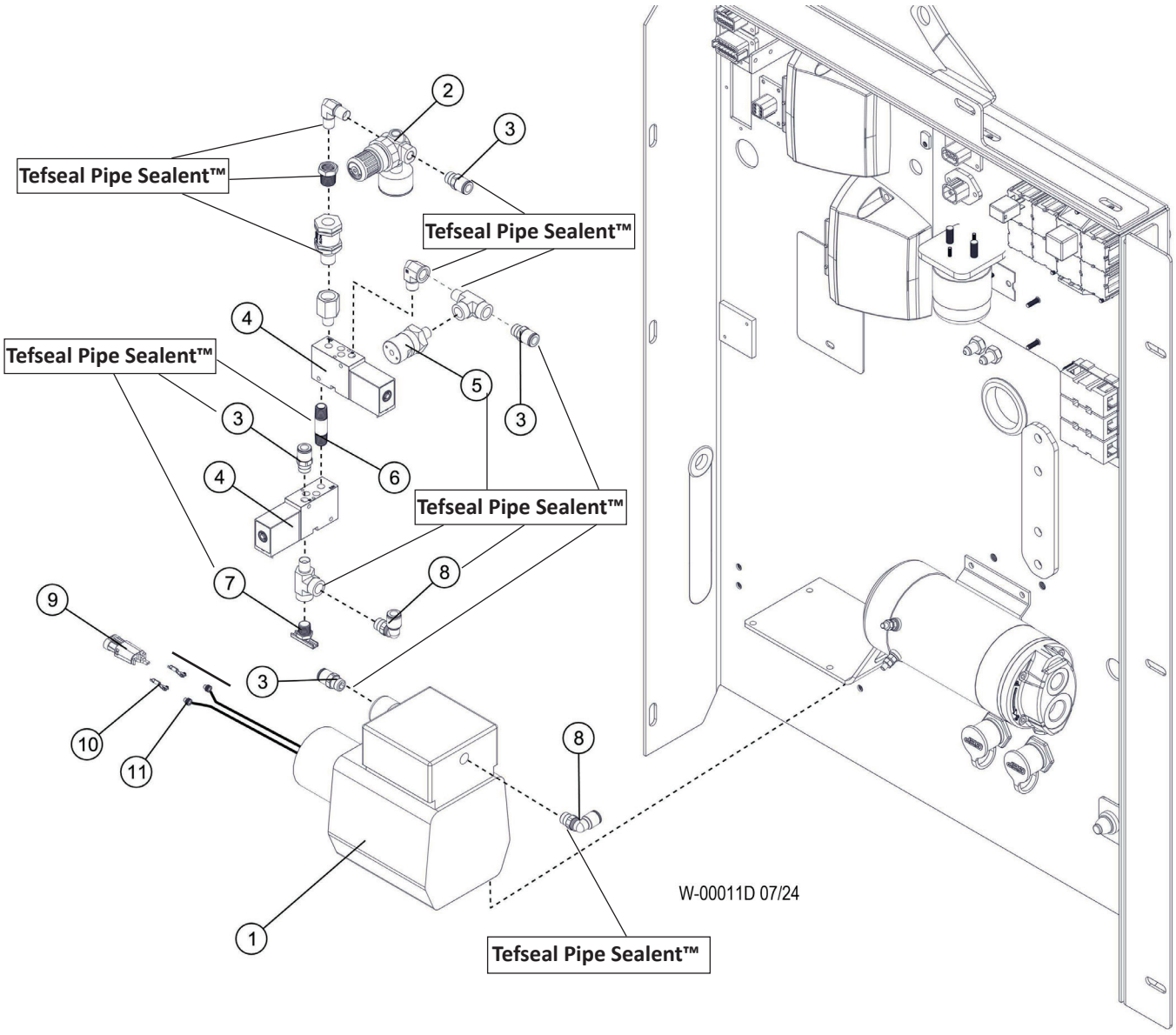


| Item | Part # | Description | Qty. |
|---|---|---|---|
| 1 | 51615 | VACUUM PUMP | 1 |
| 2 | 15649 | REGULATOR, TURBO BOOST | 1 |
| 3 | 52506 | CONNECTOR, STR - PUSH HOSE - 1/4” VACUUM **TEFSEAL PIPE SEALENT™** | 4 |
| 4 | 51616 | VALVE, 3-WAY VACUUM PUMP | 2 |
| 5 | 51737 | SWITCH, PRESSURE - VACUUM PUMP **TEFSEAL PIPE SEALENT™** | 1 |
| 6 | 16314 | NIPPLE, PIPE - .25” X 2” **TEFSEAL PIPE SEALENT™** | 1 |
| 7 | 53108 | PETCOCK, HYD TANK VENT/RAD DRAIN 1/4 **TEFSEAL PIPE SEALENT™** | 1 |
| 8 | 51739 | CONNECTOR, ELBOW -PUSH ON (VACUUM) (1/4”) **TEFSEAL PIPE SEALENT™** | 2 |
| 9 | 22223 | CONNECTOR | 1 |
| 10 | 22226 | PIN | 2 |
| 11 | 22225 | SEAL | 2 |

# W400-00061 - HYD TANK VACUUM PUMP COMPONENTS

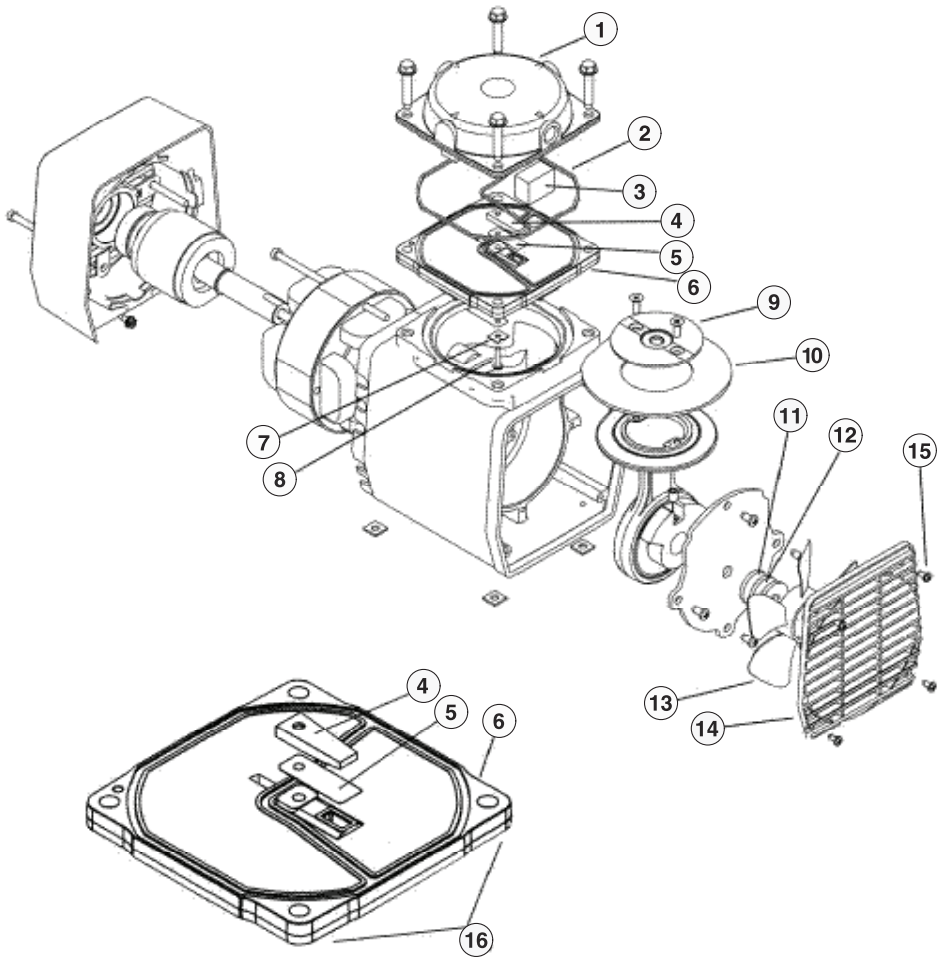


W-00012D 07/24

| Item | Part # | Description | Qty. |
|---|---|---|---|
| | 51615 | VACUUM PUMP | 1 |
| 1 | AP500 | HEAD | 1 |
| 2 | AP513 | O-RING, HEAD | 1 |
| 3 | AT712A | FILTER, MUFFLER | 2 |
| 4 | AP110 | VALVE, LIMITER | 1 |
| 5 | AF817 | VALVE, LEAF | 2 |
| 6 | AP504 | PLATE, VALVE | 1 |
| 7 | AF819A | RETAINER, VALVE | 1 |
| 8 | BB330A | SCREW, VALVE | 1 |
| 9 | AF809 | PLATE, RETAINER | 1 |
| 10 | AF818A | DIAPHRAGM, COMPRESSOR | 1 |
| * | AF818B | DIAPHRAGM, VACUUM | 1 |
| 11 | AA929 | SPACER, FELT | 3 |
| 12 | AD996 | SPACER | 1 |
| 13 | AF533 | FAN | 1 |
| 14 | AF807 | GRILL | 1 |
| 15 | AP534 | RIVET | 4 |
| 16 | AP519 | ASSEMBLY, VALVE PLATE | 1 |
| * | AP526 | CRANKCASE COVER | 1 |
| * | AP525 | CRANKCASE COVER, SCREW | 2 |
| | K294A | SERVICE KIT | 1 |

## W500-00000 - FIRE EXTINGUISHER - 2.5 GAL

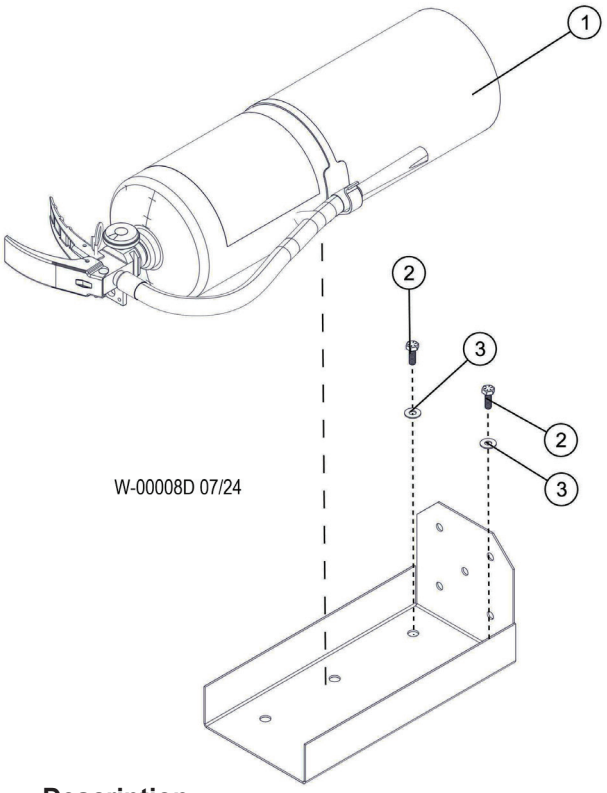


| Item | Part # | Description | Qty. |
|---|---|---|---|
| 1 | 51740 | FIRE EXTINGUISHER -2.5 GAL(LOADED STREAM) | 1 |
| 2 | 15604 | BOLT - .25” X .75” | 2 |
| 3 | 10800 | WASHER, FLAT - .25” | 2 |

## W500-00010 - FIRE EXTINGUISHER - 10LB

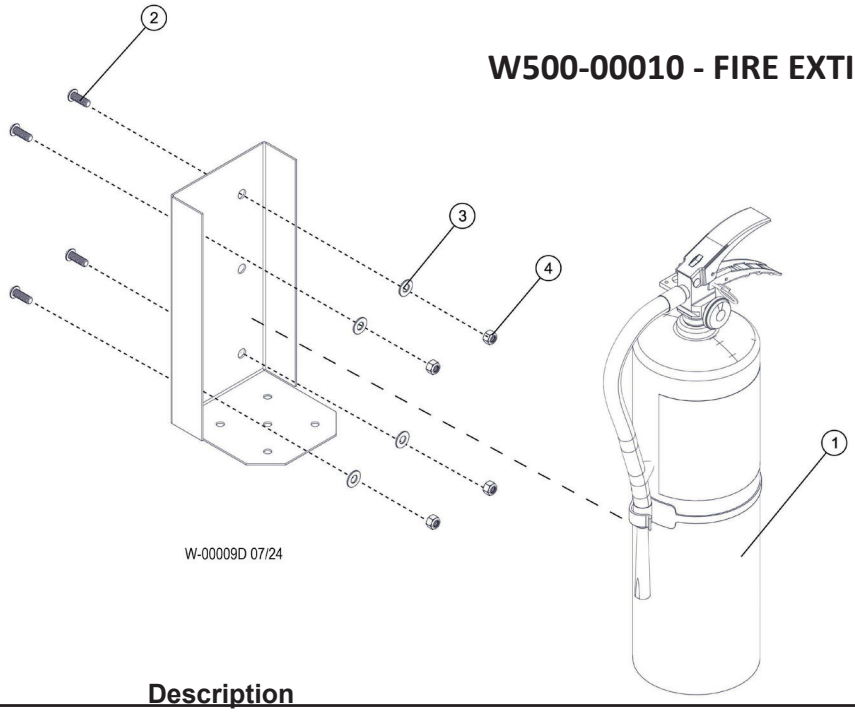


| Item | Part # | Description | Qty. |
|---|---|---|---|
| 1 | 16222 | FIRE EXTINGUISHER W/BRACKET - 10 LBS | 1 |
| 2 | 59112 | SCREW, 5/16-18X7/8” BUTTON HD | 4 |
| 3 | 15559 | WASHER, SAE FLAT - .3125” | 4 |
| 4 | 10812 | NUT, LOCK - .3125” | 4 |

# W500-00020 - AUTO LEVELING, NO SELECT, U (STANDARD MACHINE FUEL HARNESS

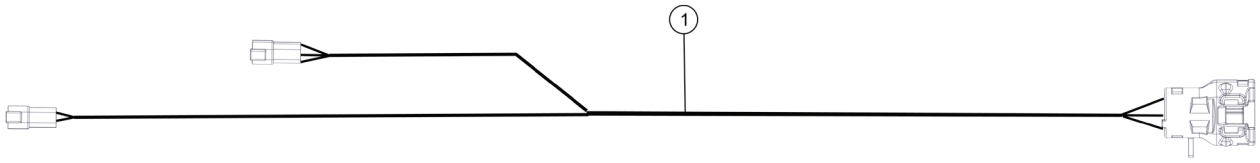


| Item | Part # | Description | Qty. |
|---|---|---|---|
| 1 | 54366 | HARNESS, FUEL - TRACK MACHINE | 1 |

# W600-00000 - AUTO LEVELING

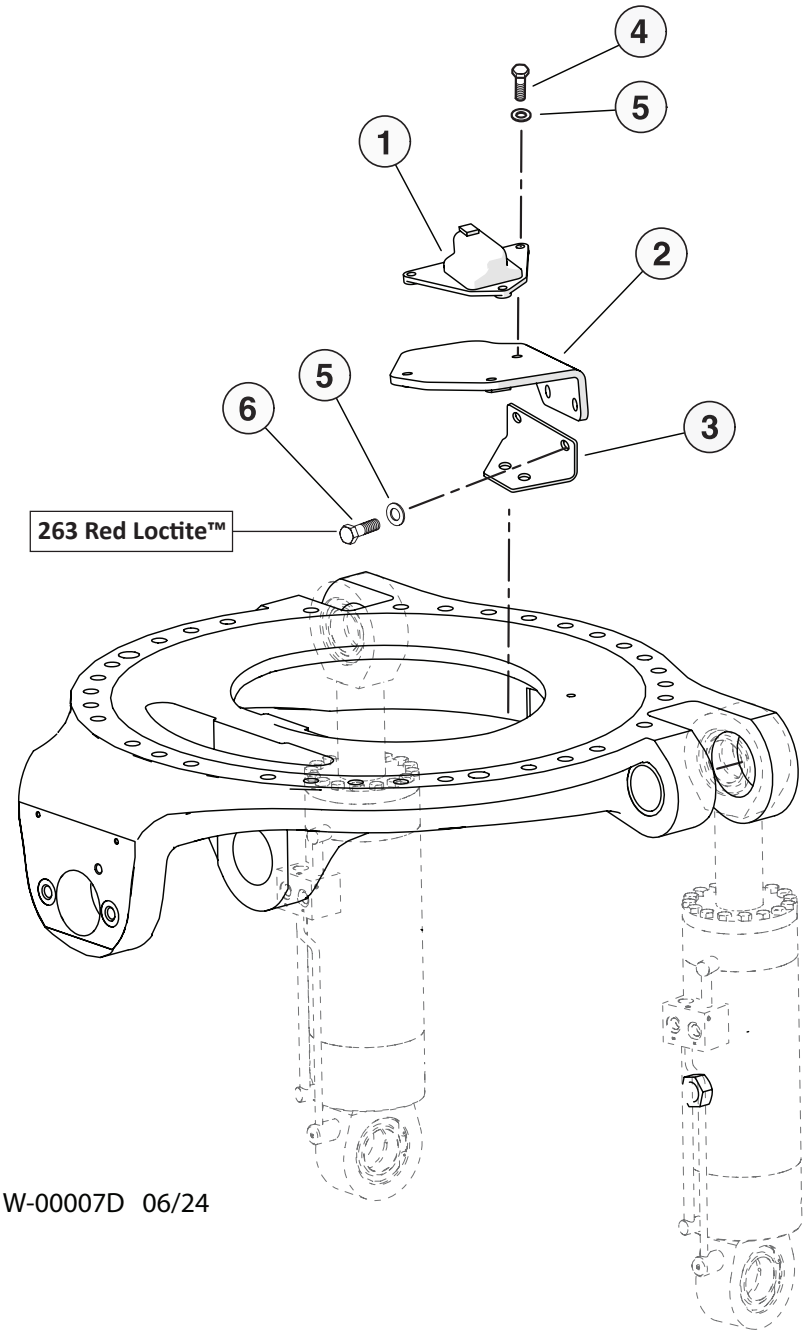


W-00007D 06/24

| Item | Part # | Description | Qty. |
|---|---|---|---|
| 1 | 55643 | SENSOR, AUTO CAB LEVEL | 1 |
| 2 | 47310 | BRACKET, SWITCH - AUTO LEVEL | 1 |
| 3 | 47308 | BRACKET, GREASE LINE - LEVELING | 1 |
| 4 | 15604 | BOLT - .25” X .75” | 3 |
| 5 | 10757 | WASHER, SAE FLAT - .25” | 5 |
| 6 | 15576 | BOLT - .0.25” X 1” **263 RED LOCTITE™** | 2 |

## THIS PAGE LEFT BLANK FOR NOTES