TIMBERPRO

TN/TL-755D
TL-755D West Coast
Parts Manual

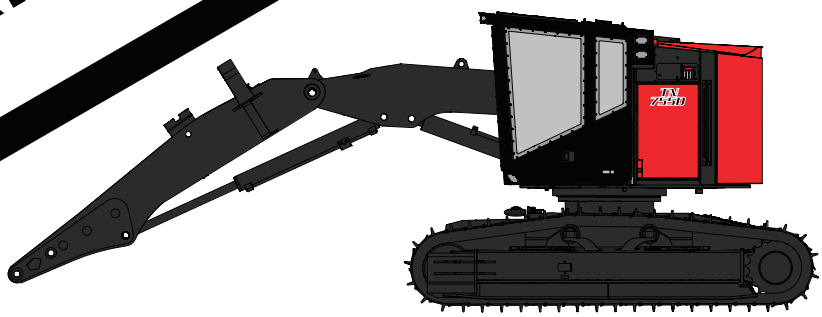

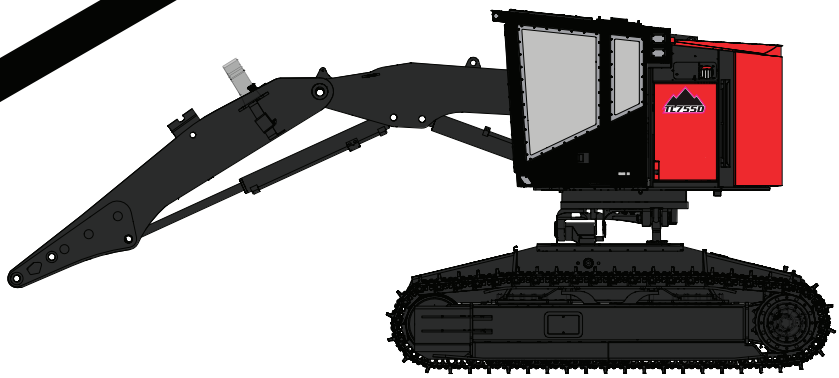

TimberPro Inc.
1407 Industrial Dr - P.O. Box 415
Shawano, WI 54166
(715)524-7899
www.timberpro.com

P/N: 62044 REV: 02

SECTION INDEX

FICHE GRID		
	INTRODUCTION	
	ENGINE	A
	ENGINE RELATED PARTS	B
	COOLING SYSTEM	C
	FUEL SYSTEM AND RELATED PARTS	D
	ELECTRICAL SYSTEM	E
	HYDRAULIC SYSTEM	H
	MAIN/REVOLVING FRAME AND RELATED PARTS	J
	OPERATORS COMPARTMENT AND CONTROL SYSTEM	K
	GUARDS	M
	SWING CIRCLE AND RELATED PARTS	N
	TRAVEL AND LOWER PIPING	P
	UNDERCARRIAGE	R
	WORK EQUIPMENT	T
	MARKS AND PLATES	U
	MISCELLANEOUS	W

INTRODUCTION

INTRODUCTION

GENERAL

This parts book lists engine and chassis service parts for the machine shown on the title page.

We reserve the right to make changes or add improvements at any time without incurring any obligation to install such changes on products previously sold.

ILLUSTRATIONS

Illustrated items are given item numbers which correspond to the same number in the parts list. Item numbers may point to more than one identical item. The quantity of items shipped will depend on the quantity ordered. Illustrations are of typical parts only.

METHOD OF LISTING

The parts list and its associated illustration is the essential content of the Parts Book. Each parts list is arranged in numeric sequence by page number.

The parts list form is divided into six columns for easy use:

1. **ITEM Column -** This column contains keys to the illustration so the part can be located on the associated illustration. If there is no key number for the part, the part is non-illustrated and is not on the associated illustration.

2. **PART NUMBER Column -** This column contains the part number of each serviceable part. The part number, in conjunction with the description of the part, is the key to locating needed service parts.

3. **DESCRIPTION Column -** This column contains the description of each part. It can be used to find needed parts when the part number is not known. Indentation of an item indicates that it is a component part (or subassembly) of the item under which it is indented.

4. **QTY Column -** This column contains the quantity of each part number listed as needed for the product it is a part of.

PRODUCT GRAPHICS

The owner and/or operator must replace any and all safety and warning product graphics if they are defaced or removed from the machine.

ORDERING PARTS

When ordering parts, always give the following information:

1. The complete part number, including prefix or suffix letters, the name of the part and the quantity required.

2. The complete model number, machine serial number and engine serial number of the machine. See PRODUCT IDENTIFICATION NUMBERS, which follows.

3. When ordering parts for items which have their own serial numbers (such as transmissions, torque converters or axles) also include the serial numbers of the transmission, torque converter and/or axle. We recommend that you write the model and machine serial numbers of your machine and all major components in the spaces provided below.

Date Received _____

Machine Model _____ Serial No. _____

Engine Model _____ Serial No. _____

Hydraulic Pump Model _____ Serial No. _____

Final Drive Model _____ Serial No. _____

_____ _____

_____ _____

_____ _____

_____ _____

PRODUCT IDENTIFICATION NUMBERS

Machine Model	Engine Model	Chassis Serial Number

Table Of Contents

Description	Page#
A100-00010 - ENGINE FILTERS	22
A100-00000 - ENGINE	22
B100-00000 - ENGINE HYDRAULIC FITTINGS	24
B100-00000 - ENGINE HYDRAULIC FITTINGS	26
B100-00020 - CHARGE PIPING - DRIVE PUMPS (MACHINE BUILD DATES UP TO 07/11/24)	28
B100-00000 - ENGINE HYDRAULIC FITTINGS	28
B100-00030 - CHARGE PUMP PIPING (MACHINE BUILD DATES 07/12/24 AND FORWARD)	29
B100-00040 - ENGINE FUEL HOSES	30
B-2220000, B-2221000 - ENGINE PANELS	31
B100-00060 - ENGINE INSTALLATION	32
B100-00070 - ENGINE SHROUD	33
B100-00080 - ENGINE AIR INTAKE	34
B100-00090 - ENGINE AFTER TREATMENT	36
B-2220700 - PTO PUMP DRIVE	37
B-2220700-SP - PTO PUMP DRIVE	38
B100-00103 - TRIPPLE DRIVE GEARBOX BREATHER	41
B200-00100 - PTO PUMP DRIVE	42
B100-00110 - HEATER HOSES	43
B100-00120 - ENGINE SHIELDS	44
B100-00130 - ELECTRICAL LOAD CENTER	45
B100-00140 - ELECTRICIAL CENTER	46
B100-00150 - HYDRAULIC FITTING KIT - ELECTRICAL PANEL	48
B100-00160 - ELECTRICAL PANEL INSTALLATION	50
B100-00170 - 120V ENGINE BLOCK HEATER	51
C100-00000 - COOLER FAN AND MOTOR INSTALLATION	53
C100-00001 - COOLING FAN MOTOR COMPONENTS	54
C100-00002 - COOLER BREAKDOWN	55
C100-00003 - COOLER FAN SHROUD	56
C100-00004 - RADIATOR/COOLER COMPONENTS	57
C100-00010 - RADIATOR SURGE TANK INSTALLATION	58
C100-00020 - COOLING UNIT RELATED PARTS	59
C100-00030 - RADIATOR HOSES AND AIR TUBES	60
D100-0000 - FUEL TANK COMPONENTS - LEVELING	62
D100-00010 - FUEL HOSE KIT - UPPER	64
D100-00020 - FUEL TANK COMPONENTS - NON-LEVELING	66
D-2270600 - FUEL TANK COMPONENTS - (DUAL PICK UP)	68
D-2270600-SP - FUEL TANK COMPONENTS - (DUAL PICK UP)	70
D100-00030 - DEF TANK COMPONENTS & COVERS	72
E100-00000 - BATTERY INSTALLATION	75
E100-00010 - ELECTRICIAL HARNESS - (IQAN SYSTEM)	76
E100-00020 - ELECTRICIAL HARNESS - (IQAN SYSTEM) (HYD. TANK SENSORS, FAN MOTOR & CHARGE SYSTEM)	77
E100-00030 - ELECTRICIAL HARNESS - (LOAD CENTER POWER)	78
E100-00040 - ELECTRICIAL HARNESS - (CAB TO ENGINE)	79
E-2227300 - IQAN LOAD CENTER COMPONENTS S/N: UP TO 1237	80
E-2227300 - IQAN LOAD CENTER XC43 COMPONENTS S/N: 1238 & FORWARD	81
E100-00050 - ELECTRICIAL HARNESS - (FRONT DOOR)	82
E100-00060 - ELECTRICIAL HARNESS ACCESSORIES	83
E100-00070 - STARTER AND ALTERNATOR ELECTRICIAL CABLES	84
E100-00080 - ENGINE ELECTRICIAL HARNESS	85
E100-00090 - ENGINE ECU GROUND HARNESS	86
E100-00100 - ENGINE AFTER TREATMENT ELECTRICIAL HARNESS	87
E100-00110 - GRID HEATER, FILL PUMP & GULLWING PUMP ELECTRICIAL HARNESSES	88
E100-00120 - STARTER CABLES	89
E100-00130 - DEF TANK ELECTRICIAL WIRE HARNESS	90
E100-00140 - BATTERY CABLES	91
E100-00150 - CABIN EXTERIOR LIGHTS	92

Description	Page#
E100-00160 - WORKING LIGHTS - FRONT DOOR	94
E0410 - 2222300 - HORN AND BACK UP ALARM	96
E0410 - 2222300 - HORN AND BACK UP ALARM	97
E100-00180 - CABIN ACCESSORIES-CAMERA	98
E100-00190 - COVER, CAMERA INSTALL	99
E100-00200 - COVER, CAMERA NON-SELECT	100
E100-00210 - CONTROL HARNESS, PROCESSOR, U	101
E100-00215 - LEFT & RIGHT CONTROL PODS	102
H200-00000 - MAIN BOOM CYLINDER PIPING - VALVE TO BULKHEAD(W450/W300 VALVE)	105
H200-00010 - HOC MANIFOLD & CASE MANIFOLD PIPING - (WS450/WS300 VALVE)	106
H200-00020 - IMPLEMENT PUMP PRESSURE & LOAD SENSE PIPING (WS450/WS300 VALVE)	108
H100-00040 - DRIVE PUMP UPPER PIPING - (COMMON)	110
H100-00050 - TRACK DRIVE BRAKE, SHIFT & CASE DRAIN UPPER PIPING - (COMMON)	112
H100-00060 - COOLING FAN MOTOR PIPING - (COMMON)	113
H100-00061 - COOLING FAN MOTOR COMPONENTS - (COMMON)	114
H100-00070 - HYDRAULIC TANK SURGE TANK INSTALLATION AND PIPING - (COMMON)	115
H100-00080 - GULLWING CYLINDER & HYDRAULIC TANK FILL PIPING - (COMMON)	116
H100-00090 - HYDRAULIC TANK FILL HOSE ASSEMBLY - (COMMON)	117
H100-00100 - BOOM LIGHT WIRE HOSE ASSEMBLY	118
H100-00110 - HYDRAULIC TANK - SINGLE PUMP SUCTION	120
H100-00120 - HYDRAULIC TANK - DUAL PUMP SUCTION	122
H100-00130 - HYDRAULIC TANK FITTINGS	124
H100-00140 - HYD TANK HEATER U. (120V)	125
H100-00150 - HYDRAULIC TANK INSTALLATION	126
H200-00100 - MAIN VALVE INSTALLATION - (W450/W300 VALVE)	128
H200-00110 - MAIN VALVE HYD. FITTINGS - DISC SAW (LEVELING) - (W450/W300 VALVE)	129
H200-00120 - MAIN VALVE HYD. FITTINGS - DISC SAW (NON-LEVELING) (W450/W300 VALVE)	130
H200-00121 - WS450 MAIN VALVE SECTION - INLET - (DISC SAW)	131
H200-00122 - W450 MAIN VALVE SECTION - TOOL TILT - (DISC SAW)	132
H200-00123 - W450 MAIN VALVE SECTION - STICK BOOM - (DISC SAW)	133
H200-00124 - W450 MAIN VALVE SECTION - MAIN BOOM - (DISC SAW)	134
H200-00125 - WS300 MAIN VALVE SECTION - ACCUMULATOR - (DISC SAW)	135
H200-00126 - WS300 MAIN VALVE SECTION - ROTATE - (DISC SAW)	136
H200-00127 - WS300 MAIN VALVE SECTION - CLAMP - (DISC SAW)	137
H200-00128 - WS300 MAIN VALVE SECTION - CAB LEVEL - (DISC SAW)	138
H200-00129 - WS300 MAIN VALVE SECTION - OUTLET - (DISC SAW)	139
H200-00130 - MAIN VALVE HYD. FITTINGS - DISC SAW/BAR SAW COMBO (LEVELING) (W450/W300 VALVE)	140
H200-00140 - MAIN VALVE HYD. FITTINGS - DISC SAW/BAR SAW COMBO (NON-LEVELING) (W450/W300 VALVE)	141
H200-00141 - W450 MAIN VALVE SECTION - INLET - (DISC SAW / BAR SAW COMBO)	142
H200-00142 - W450 MAIN VALVE SECTION - TOOL TILT - (DISC SAW / BAR SAW COMBO)	143
H200-00143 - W450 MAIN VALVE SECTION - STICK BOOM (DISC SAW / BAR SAW COMBO)	144
H200-00144 - W450 MAIN VALVE SECTION - MAIN BOOM (DISC SAW / BAR SAW COMBO)	145
H200-00145 - W450 MAIN VALVE SECTION - SAW - (DISC SAW / BAR SAW COMBO)	146
H200-00146 - WS300 MAIN VALVE SECTION - ACCUMULATOR (DISC SAW / BAR SAW COMBO)	147
H200-00147 - WS300 MAIN VALVE SECTION - ROTATE - (DISC SAW / BAR SAW COMBO)	148
H200-00148 - WS300 MAIN VALVE SECTION - CLAMP - (DISC SAW / BAR SAW COMBO)	149
H200-00149 - WS300 MAIN VALVE SECTION - CAB LEVEL (DISC SAW / BAR SAW COMBO)	150
H200-00150 - WS300 MAIN VALVE SECTION - OUTLET - (DISC SAW / BAR SAW COMBO)	151
H200-00160 - BOOM PLATE HYD. FITTINGS - DISC SAW & PROCESSOR ATTACHMENTS (W450/W300 VALVE)	152
H200-00170 - MAIN VALVE HYD. FITTINGS - CONTROL FALL PROCESSOR (LEVELING) (W450/W300 VALVE)	153
H200-00180 - MAIN VALVE HYD. FITTINGS - CONTROL FALL PROCESSOR (NON-LEVELING) (W450/W300 VALVE)	154
H200-00181 - W450 MAIN VALVE SECTION - INLET - (CONTROL FALL PROCESSOR)	155
H200-00182 - W450 MAIN VALVE SECTION - TOOL TILT - (CONTROL FALL PROCESSOR)	156
H200-00183 - W450 MAIN VALVE SECTION - STICK BOOM - (CONTROL FALL PROCESSOR)	157
H200-00184 - W450 MAIN VALVE SECTION - MAIN BOOM - (CONTROL FALL PROCESSOR)	158
H200-00185 - W450 MAIN VALVE SECTION - PROCESSOR/SAW (CONTROL FALL PROCESSOR)	159
H200-00186 - WS300 MAIN VALVE SECTION - HEAD ROTATE (CONTROL FALL PROCESSOR)	160
H200-00187 - WS300 MAIN VALVE SECTION - CAB LEVEL - (CONTROL FALL PROCESSOR)	161
H200-00188 - WS300 MAIN VALVE SECTION - OUTLET - (CONTROL FALL PROCESSOR)	162

Description	Page#
H200-00190 - BOOM PLATE HYD. FITTINGS - DISC SAW & PROCESSOR ATTACHMENTS (W450/W300 VALVE)	163
H200-00200 - MAIN VALVE HYD. FITTINGS - DANGLE PROCESSOR WITH FIXED ARM (LEVELING) (W450/W300 VALVE)	164
H200-00210 - MAIN VALVE HYD. FITTINGS - DANGLE PROCESSOR WITH FIXED ARM (NON-LEVELING) (W450/W300 VALVE)	165
H200-00211 - W450 MAIN VALVE SECTION - INLET - (FIXED ARM DANGLE PROCESSOR)	166
H200-00212 - W450 MAIN VALVE SECTION - STICK BOOM (FIXED ARM DANGLE PROCESSOR)	167
H200-00214 - W450 MAIN VALVE SECTION - PROCESSOR / SAW (FIXED ARM DANGLE PROCESSOR)	168
H200-00213 - W450 MAIN VALVE SECTION - MAIN BOOM (FIXED ARM DANGLE PROCESSOR)	169
H200-00215 - WS300 MAIN VALVE SECTION - ROTATE - (FIXED ARM DANGLE PROCESSOR)	170
H200-00216 - WS300 MAIN VALVE SECTION - CAB LEVEL (FIXED ARM DANGLE PROCESSOR)	171
H200-00217 - WS300 MAIN VALVE SECTION - OUTLET (FIXED ARM DANGLE PROCESSOR)	172
H200-00220 - MAIN VALVE HYD. FITTINGS - DANGLE PROCESSOR WITH SQUIRT BOOM (LEVELING) (W450/W300 VALVE)	174
H200-00230 - MAIN VALVE HYD. FITTINGS - DANGLE PROCESSOR WITH SQUIRT BOOM (NON-LEVELING) (W450/W300 VALVE)	175
H200-00231 - WS450 MAIN VALVE SECTION - INLET (SQUIRT ARM DANGLE PROCESSOR)	176
H200-00232 - WS450 MAIN VALVE SECTION - STICK BOOM (SQUIRT ARM DANGLE PROCESSOR)	177
H200-00233 - WS450 MAIN VALVE SECTION - MAIN BOOM (SQUIRT ARM DANGLE PROCESSOR)	178
H200-00234 - WS450 MAIN VALVE SECTION - PROCESSOR / SAW (SQUIRT ARM DANGLE PROCESSOR)	179
H200-00236 - WS300 MAIN VALVE SECTION - SQUIRT BOOM (SQUIRT ARM DANGLE PROCESSOR)	181
H200-00236 - WS300 MAIN VALVE SECTION - ROTATE (SQUIRT ARM DANGLE PROCESSOR)	182
H200-00237 - WS300 MAIN VALVE SECTION - CAB LEVEL (SQUIRT ARM DANGLE PROCESSOR)	183
H200-00238 - WS300 MAIN VALVE SECTION - OUTLET (SQUIRT ARM DANGLE PROCESSOR)	184
H200-00230 - BOOM PLATE HYD. FITTINGS - DANGLE PROCESSOR ATTACHMENTS (W450/W300 VALVE)	185
H100-00340 - CAB LEVELING HYD. HOSE LOWER CONNECTIONS ROTARY MAINFOLD TO CYLINDERS	186
H100-00350 - LEVELING CARBODY HOSE & FITTINGS - (RM. TO BULKHEAD & RH TRACK MOTOR FITTINGS)	188
H100-00360 - LEVELING CARBODY HOSE & FITTINGS - (RM. TO BULKHEAD & LH TRACK MOTOR FITTINGS)	190
H100-00370 - LEVELING CARBODY HOSE & FITTINGS - (FUEL SYSTEM)	192
H100-00380 - LEVELING CARBODY HOSE & FITTINGS - (LEVELING CYLINDER BASE & RM GREASE LINES)	194
H100-00390 - HYDRAULIC FITTING KIT - (TRACK)	195
H100-00400 - HYDRAULIC FITTING KIT - (TRACK)	196
H100-00410 - HYDRAULIC FITTING KIT - (TRACK)	198
H100-00420 - HYDRAULIC FITTING KIT - (TRACK)	199
H100-00421 - ROTARY MANIFOLD BREAKDOWN	200
H200-00100 - HYDRAULIC FITTING KIT - (TRACK)	202
H100-00430 - LEVELING CARBODY GREASE LINES AND FITTINGS	204
H100-00440 - NON-LEVELING LEVELING CARBODY HYD. FITTINGS (RM. TO BULKHEAD TO TRACK MOTORS)	206
H100-00450 - NON-LEVELING CARBODY HYD. FITTINGS - (FUEL SYSTEM)	208
H100-00460 - HYDRAULIC FITTING KIT - (TRACK-NL)	210
H100-00470 - HYDRAULIC FITTING KIT - (TRACK-NL)	212
H100-00480 - HYDRAULIC FITTING KIT - (TRACK-NL)	214
H100-00481 - ROTARY MANIFOLD COMPONENTS	216
H100-00481 - ROTARY MANIFOLD COMPONENTS	218
H200-00100 - HYDRAULIC FITTING KIT - (TRACK)	220
H100-00490 - MAIN BOOM PIPING - DISC SAW	222
H100-00500 - STICK BOOM PIPING - DISC SAW	224
H-2225200, H-2256700 - DISC SAW PIPING - PRESSURE, CASE DRAIN & - LOAD SENSE (DISC SAW PUMP TO BOOM)	226
H100-00520 - DISC SAW PIPING - TOOL TILT (K220/L90 VALVE) - MAIN VALVE TO BOOM	228
H200-00240 - DISC SAW PIPING - TOOL TILT (W450/W300 VALVE) MAIN VALVE TO BOOM	229
H100-00530 - DISC SAW PIPING - STICK BOOM CYLINDER (K220/L90 VALVE) (MAIN VALVE TO BOOM)	230
H200-00250 - DISC SAW PIPING - STICK BOOM (W450/W300 VALVE) MAIN VALVE TO BOOM	231
H100-00540 - DISC SAW PIPING - CLAMP (K220/L90 VALVE) - MAIN VALVE TO BOOM	232
H200-00260 - DISC SAW PIPING - CLAMP (W450/W300 VALVE) - MAIN VALVE TO BOOM	233
H100-00550 - DISC SAW PIPING - ACCUMULATOR (K220/L90 VALVE) MAIN VALVE TO BOOM)	234
H200-00270 - DISC SAW PIPING - ACCUMULATOR (W450/W300 VALVE) MAIN VALVE TO BOOM)	235
H100-00560 - DISC SAW PIPING - LATERAL TILT (K220/L90 VALVE) MAIN VALVE TO BOOM	236
H200-00280 - DISC SAW PIPING - LATERAL TILT (W450/W300 VALVE) MAIN VALVE TO BOOM	237
H100-00570 - DISC SAW PIPING - CAB LEVEL (K220/L90 VALVE) - MAIN VALVE TO BOOM	238
H200-00290 - DISC SAW PIPING - CAB LEVEL (W450/W300 VALVE) MAIN VALVE TO BOOM	239
H200-00300 - DISC SAW PIPING - MAIN BOOM CYLINDER (W450/W300 VALVE) (BULKHEAD FITTING TO CYLINDER)	240

Description	Page#
H100-00580 - DISC SAW PIPING - TOOL TILT (MAIN BOOM TO CYLINDER)	241
H100-00590 - DISC SAW PIPING - STICK BOOM (MAIN BOOM TO STICK CYLINDER)	242
H100-00600 - DISC SAW PIPING - CLAMP (MAIN BOOM TO STICK BOOM)	243
H100-00610 - DISC SAW PIPING - ACCUMULATOR (MAIN BOOM TO STICK BOOM)	244
H100-00620 - DISC SAW PIPING - LATERAL TILT (MAIN BOOM TO STICK BOOM)	245
H100-00630 - DISC SAW PIPING - PRESSURE & RETURN (MAIN BOOM TO STICK BOOM)	246
H100-00640 - DISC SAW PIPING - CASE DRAIN (MAIN BOOM TO STICK BOOM)	247
H100-00650 - DISC SAW PIPING - LIGHT WIRE (MAIN BOOM TO STICK BOOM)	248
H100-00660 - DISC SAW PIPING - GREASE HOSES (MAIN BOOM TO STICK BOOM)	249
H100-00670 - MAIN BOOM PIPING - DISC SAW/BAR SAW COMBO	250
H100-00680 - STICK BOOM PIPING - DISC SAW/BAR SAW COMBO	252
H-2224500 - DISC SAW/BAR SAW COMBO PIPING - PRESSURE, RETURN, CASE DRAIN & LOAD SENSE (DISC SAW PUMP TO BOOM)	254
H100-00700 - DISC SAW/BAR SAW COMBO PIPING - TOOL TILT (K220/L90 VALVE) MAIN VALVE TO BOOM	256
H200-00310 - DISC SAW/BAR SAW COMBO PIPING - TOOL TILT (W450/W300 VALVE) MAIN VALVE TO BOOM	257
H100-00710 - DISC SAW/BAR SAW COMBO PIPING - STICK BOOM (K220/L90 VALVE) VALVE TO BOOM	258
H200-00310 - DISC SAW/BAR SAW COMBO PIPING - STICK BOOM (W450/W300 VALVE) VALVE TO BOOM	259
H100-00720 - DISC SAW/BAR SAW COMBO PIPING - CLAMP (K220/L90 VALVE) MAIN VALVE TO BOOM	260
H200-00320 - DISC SAW/BAR SAW COMBO PIPING - CLAMP (W450/W300 VALVE) MAIN VALVE TO BOOM	261
H100-00730 - DISC SAW/BAR SAW COMBO PIPING - ACCUMULATOR (K220/L90 VALVE) VALVE TO BOOM	262
H200-00330 - DISC SAW/BAR SAW COMBO PIPING - ACCUMULATOR (W450/W300 VALVE) VALVE TO BOOM	263
H100-00740 - DISC SAW/BAR SAW COMBO PIPING - LATERAL TILT (K220/L90 VALVE) VALVE TO BOOM	264
H200-00340 - DISC SAW/BAR SAW COMBO PIPING - LATERAL TILT (W450/W300 VALVE) VALVE TO BOOM	265
H100-00750 - DISC SAW/BAR SAW COMBO PIPING - CAB LEVEL (K220/L90 VALVE) VALVE TO BOOM	266
H200-00350 - DISC SAW/BAR SAW COMBO PIPING - CAB LEVEL (W450/W300 VALVE) VALVE TO BOOM	267
H100-00760 - DISC SAW/BAR SAW COMBO PIPING - MAIN BOOM CYLINDER (BULKHEAD FITTING TO CYLINDER)	268
H100-00770 - DISC SAW/BAR SAW COMBO PIPING - SAW (K220/L90 VALVE) BULKHEAD FITTING TO CYLINDER	269
H200-00350 - DISC SAW/BAR SAW COMBO PIPING - SAW (W450/W300 VALVE) BULKHEAD FITTING TO CYLINDER	270
H100-00780 - DISC SAW/BAR SAW COMBO PIPING - TOOL TILT (MAIN BOOM TO CYLINDER)	271
H100-00790 - DISC SAW/BAR SAW COMBO PIPING - STICK BOOM (MAIN BOOM TO STICK CYLINDER)	272
H100-00800 - DISC SAW/BAR SAW COMBO PIPING - SAW (MAIN BOOM TO STICK BOOM)	273
H100-00810 - DISC SAW/BAR SAW COMBO PIPING - CLAMP (MAIN BOOM TO STICK BOOM)	274
H100-00820 - DISC SAW/BAR SAW COMBO PIPING - ACCUMULATOR (MAIN BOOM TO STICK BOOM)	275
H100-00830 - DISC SAW/BAR SAW COMBO PIPING - LATERAL TILT (MAIN BOOM TO STICK BOOM)	276
H100-00840 - DISC SAW/BAR SAW COMBO PIPING - PRESSURE & RETURN (MAIN BOOM TO STICK BOOM)	277
H100-00850 - DISC SAW/BAR SAW COMBO PIPING - CASE DRAIN (MAIN BOOM TO STICK BOOM)	278
H100-00860 - DISC SAW/BAR SAW COMBO PIPING - LIGHT WIRE (MAIN BOOM TO STICK BOOM)	279
H100-00870 - DISC SAW/BAR SAW COMBO PIPING - GREASE HOSES (MAIN BOOM TO STICK BOOM)	280
T-2239800 - ARM ASSEMBLY, FB, HD, U - (TANGUAY HD)	281
H101-0010 - Piping, W/E U. (Disc/Basic - TANGUAY HD)	282
H101-0020 - PIPING, W/E U. (DISC/BASIC) HD	284
H101-0030 - Piping, W/E U. (Disc/Basic - HD) -	286
HYDRAULIC HOSE KIT - MAIN TO HD STICK DISCSAW BASIC - TOOL	286
H101-0040 - Piping, W/E U. (Disc/Basic - HD) -	288
HYDRAULIC HOSE KIT - MAIN TO HD STICK DISCSAW BASIC - STICK	288
H101-0050 - Piping, W/E U. (Disc/Basic - HD) -	290
HYDRAULIC HOSE KIT - MAIN TO HD STICK DISCSAW BASIC - CLAMP	290
H101-0060 - Piping, W/E U. (Disc/Basic - HD) -	292
HYDRAULIC HOSE KIT - MAIN TO HD STICK - ACCUMULATOR	292
H101-0070 - Piping, W/E U. (Disc/Basic - HD) -	294
HYDRAULIC HOSE KIT - MAIN TO HD STICK - LATERAL TILT	294
H101-0080 - Piping, W/E U. (Disc/Basic - HD) -	296
HYDRAULIC HOSE KIT - MAIN TO HD STICK - PRESS/RET	296
H101-0090 - Piping, W/E U. (Disc/Basic - HD) -	298
HYDRAULIC HOSE KIT - MAIN TO HD STICK - CASE DRAIN	298
H101-0100 - Piping, W/E U. (Disc/Basic - HD) -	300
HYDRAULIC HOSE KIT - MAIN TO HD STICK - LIGHT WIRE	300
H101-0110 - Piping, W/E U. (Disc/Basic - HD) -	302

Description	Page#
HYDRAULIC HOSE KIT - MAIN TO HD STICK - GREASE LINES	302
H101-0120 - Piping, W/E U. (Disc/Combo - TANGUAY HD)	304
H101-0130 - Piping, W/E U. (Disc/Combo - TANGUAY HD)	306
H101-0140 - Piping, W/E U. (Disc/Combo - SAW HOSES TANGUAY HD)	308
H101-0150 - Piping, W/E U. (Disc/Combo -	310
TANGUAY HD) - HYDRAULIC HOSE KIT - MAIN TO HD STICK - TOOL	310
H101-0160 - Piping, W/E U. (Disc/Combo - TANGUAY HD) -	312
HYDRAULIC HOSE KIT - MAIN TO HD STICK - STICK BOOM	312
H101-0170 - Piping, W/E U. (Disc/Combo - TANGUAY HD) -	314
HYDRAULIC HOSE KIT - MAIN TO HD STICK - CLAMP	314
H101-0180 - Piping, W/E U. (Disc/Combo -	316
TANGUAY HD) HYDRAULIC HOSE KIT - MAIN TO HD STICK - ACCUMULATOR	316
H101-0190 - Piping, W/E U. (Disc/Combo - TANGUAY HD) -	318
HYDRAULIC HOSE KIT - MAIN TO HD STICK - LATERAL TILT	318
H101-200 - Piping, W/E U. (Disc/Combo - TANGUAY HD) -	320
HYDRAULIC HOSE KIT - MAIN TO HD STICK - PRESS/RET	320
H101-210 - Piping, W/E U. (Disc/Combo - TANGUAY HD) -	322
HYDRAULIC HOSE KIT - MAIN TO HD STICK - CASE DRAIN	322
H101-220 - Piping, W/E U. (Disc/Combo - TANGUAY HD) -	324
HYDRAULIC HOSE KIT - MAIN TO HD STICK - LIGHT WIRE	324
H101-230 - Piping, W/E U. (Disc/Combo - TANGUAY HD) -	326
HYDRAULIC HOSE KIT - MAIN TO HD STICK - SAW	326
H101-240 - ARM ASSEMBLY, FB, HD, U - (TANGUAY HD)	328
H100-00880 - MAIN BOOM PIPING - CONTROL FALL PROCESSOR	330
H100-00890 - STICK BOOM PIPING - CONTROL FALL PROCESSOR	332
H100-00900 - CONTROL FALL PROCESSOR PIPING - PRESSURE, RETURN, CASE DRAIN & LOAD SENSE - (K220/L90 VALVE) - VALVE TO BOOM	334
H-2258300, 2258400 - CONTROL FALL PROCESSOR PIPING - SAW PRESSURE, RETURN, CASEDRAIN & LOAD SENSE	335
H100-00920 - CONTROL FALL PROCESSOR PIPING - TOOL TILT (K220/L90 VALVE) MAIN VALVE TO BOOM	336
H200-00360 - CONTROL FALL PROCESSOR PIPING - TOOL TILT (W450/W300 VALVE) MAIN VALVE TO BOOM	337
H100-00930 - CONTROL FALL PROCESSOR PIPING - STICK BOOM CYLINDER (K220/L90 VALVE) - MAIN VALVE TO BOOM	338
H200-00370 - CONTROL FALL PROCESSOR PIPING - STICK BOOM CYLINDER (W450/W300 VALVE)	339
H200-00940 - CONTROL FALL PROCESSOR PIPING - MAIN BOOM (K220/L90 VALVE) MAIN VALVE TO BOOM	340
H200-00380 - CONTROL FALL PROCESSOR PIPING - MAIN BOOM (W450/W300 VALVE)	341
H100-00950 - CONTROL FALL PROCESSOR PIPING - ROTATE (K220/L90 VALVE) MAIN VALVE TO BOOM	342
H200-00390 - CONTROL FALL PROCESSOR PIPING - ROTATE (W450/W300 VALVE) MAIN VALVE TO BOOM	343
H100-00960 - CONTROL FALL PROCESSOR PIPING - CAB LEVEL (K220/L90 VALVE) MAIN VALVE TO BOOM	344
H200-00400 - CONTROL FALL PROCESSOR PIPING - CAB LEVEL (W450/W300 VALVE) MAIN VALVE TO BOOM	345
H100-00970 - CONTROL FALL PROCESSOR PIPING - MAIN BOOM CYLINDER (BULKHEAD FITTING TO CYLINDER)	346
H100-00980 - CONTROL FALL PROCESSOR PIPING - LIGHT WIRE (MAIN BOOM TO STICK BOOM)	347
H100-00990 - CONTROL FALL PROCESSOR PIPING - TOOL TILT (MAIN BOOM TO CYLINDER)	348
H100-01000 - CONTROL FALL PROCESSOR PIPING - STICK BOOM (MAIN BOOM TO STICK CYLINDER)	349
H100-01010 - CONTROL FALL PROCESSOR PIPING - ROTATE (MAIN BOOM TO STICK BOOM)	350
H100-01020 - CONTROL FALL PROCESSOR PIPING - PRESSURE & RETURN (MAIN BOOM TO STICK BOOM)	351
H100-01030 - CONTROL FALL PROCESSOR PIPING - CASE DRAIN & ATTACHMENT ELEC. (MAIN BOOM TO STICK BOOM)	352
H100-01040 - CONTROL FALL PROCESSOR PIPING - GREASE HOSES (MAIN BOOM TO STICK BOOM)	353
H100-01050 - MAIN BOOM PIPING - FIXED STICK BOOM DANGLE HEAD PROCESSOR	354
H100-01060 - STICK BOOM PIPING - FIXED STICK BOOM DANGLE HEAD PROCESSOR	356
H100-01070 - FIXED STICK BOOM DANGLE PROCESSOR PIPING - PRESSURE, CASE DRAIN & LOAD SENSE (K220/L90 VALVE) - AUXILIARY PUMP TO BOOM)	358
H200-00410 - STICK BOOM DANGLE PROCESSOR PIPING - SAW PRESSURE, RETURN, CASE DRAIN & LOAD SENSE (W450/W300 VALVE) - VALVE TO BOOM	359
H100-01080 - FIXED STICK BOOM DANGLE PROCESSOR PIPING - STICK BOOM CYLINDER (K220/L90 VALVE) - MAIN VALVE TO BOOM	360
H200-00420 - FIXED STICK BOOM DANGLE PROCESSOR PIPING - STICK BOOM CYLINDER (W450/W300 VALVE) - MAIN VALVE TO BOOM	361
H100-01090 - FIXED STICK BOOM DANGLE PROCESSOR PIPING - ROTATE (K220/L90 VALVE) - MAIN VALVE TO BOOM	362
H200-00430 - FIXED STICK BOOM DANGLE PROCESSOR PIPING - ROTATE (W450/W300 VALVE) MAIN VALVE TO BOOM	363

Description	Page#
H100-01100 - FIXED STICK BOOM DANGLE PROCESSOR PIPING - CAB LEVEL (K220/L90 VALVE) MAIN VALVE TO BOOM	364
H200-00440 - FIXED STICK BOOM DANGLE PROCESSOR PIPING - CAB LEVEL (W450/W300 VALVE) MAIN VALVE TO BOOM	365
H100-01110 - FIXED STICK BOOM DANGLE PROCESSOR PIPING - MAIN BOOM CYLINDER (BULKHEAD FITTING TO CYLINDER)	366
H100-01120 - FIXED STICK BOOM DANGLE PROCESSOR PIPING - LIGHT WIRE(MAIN BOOM TO STICK BOOM)	367
H100-01130 - FIXED STICK BOOM DANGLE PROCESSOR PIPING - STICK BOOM (MAIN BOOM TO STICK CYLINDER)	368
H100-01140 - FIXED STICK BOOM DANGLE PROCESSOR PIPING - ROTATE (MAIN BOOM TO STICK BOOM)	369
H100-01150 - FIXED STICK BOOM DANGLE PROCESSOR PIPING - PRESSURE & RETURN (MAIN BOOM TO STICK BOOM)	370
H100-01160 - FIXED STICK BOOM DANGLE PROCESSOR PIPING - CASE DRAIN & ATTACHMENT ELEC. (MAIN BOOM TO STICK BOOM)	371
H100-01170 - FIXED STICK BOOM DANGLE PROCESSOR PIPING - GREASE HOSES (MAIN BOOM TO STICK BOOM)	372
H100-01180 - MAIN BOOM PIPING - SQUIRT BOOM PROCESSOR	374
H100-01190 - STICK BOOM PIPING - SQUIRT BOOM PROCESSOR	376
H100-01200 - SQUIRT BOOM PROCESSOR PIPING - PRESSURE, CASE DRAIN & LOAD SENSE - (K220/L90 VALVE) - VALVE TO BOOM	378
H200-00450 - SQUIRT BOOM PROCESSOR PIPING - PRESSURE, CASE DRAIN & LOAD SENSE - (W450/W300 VALVE) - VALVE TO BOOM	379
H100-01210 - SQUIRT BOOM PROCESSOR PIPING - STICK BOOM CYLINDER (K220/L90 VALVE) MAIN VALVE TO BOOM	380
H200-00460 - SQUIRT BOOM PROCESSOR PIPING - STICK BOOM CYLINDER (W450/W300 VALVE) - MAIN VALVE TO BOOM	381
H100-01220 - SQUIRT BOOM PROCESSOR PIPING - MAIN BOOM (K220/L90 VALVE) MAIN VALVE TO BOOM	382
H200-00470 - SQUIRT BOOM PROCESSOR PIPING - MAIN BOOM (W450/W300 VALVE) MAIN VALVE TO BOOM	383
H100-01230 - SQUIRT BOOM PROCESSOR PIPING - MAIN BOOM CYLINDER (BULKHEAD FITTING TO CYLINDER)	384
H100-01240 - SQUIRT BOOM PROCESSOR PIPING - SQUIRT (K220/L90 VALVE) MAIN VALVE TO BOOM	385
H200-00480 - SQUIRT BOOM PROCESSOR PIPING - SQUIRT (W450/W300 VALVE) MAIN VALVE TO BOOM	386
H100-01250 - SQUIRT BOOM PROCESSOR PIPING - ROTATE (K220/L90 VALVE) MAIN VALVE TO BOOM	387
H200-00490 - SQUIRT BOOM PROCESSOR PIPING - ROTATE (W450/W300 VALVE) MAIN VALVE TO BOOM	388
H100-01260 - SQUIRT BOOM PROCESSOR PIPING - CAB LEVEL (K220/L90 VALVE) MAIN VALVE TO BOOM	390
H200-00500 - SQUIRT BOOM PROCESSOR PIPING - CAB LEVEL (W450/W300 VALVE) MAIN VALVE TO BOOM	392
H100-01270 - SQUIRT BOOM PROCESSOR PIPING - LIGHT WIRE (MAIN BOOM TO STICK BOOM)	394
H100-01280 - SQUIRT BOOM PROCESSOR PIPING - STICK BOOM (MAIN BOOM TO STICK CYLINDER)	395
H100-01290 - SQUIRT BOOM PROCESSOR PIPING - BOOM SQUIRT (MAIN BOOM TO CYLINDER)	396
H100-01300 - SQUIRT BOOM PROCESSOR PIPING - ROTATE (MAIN BOOM TO STICK BOOM)	397
H100-01310 - SQUIRT BOOM PROCESSOR PIPING - PRESSURE & RETURN (MAIN BOOM TO STICK BOOM)	398
H100-01320 - SQUIRT BOOM PROCESSOR PIPING - CASE DRAIN & ATTACHMENT ELEC. (MAIN BOOM TO STICK BOOM)	399
H100-01330 - SQUIRT BOOM PROCESSOR PIPING - GREASE HOSES (MAIN BOOM TO STICK BOOM	400
H100-01340 - IMPLEMENT PUMP - 145CC	401
H100-01350 - IMPLEMENT PUMP - 145CC	402
H100-01351 - IMPLEMENT PUMP - 145CC	404
H100-01352 - IMPLEMENT PUMP - 145CC	406
H100-01353 - IMPLEMENT PUMP - 145CC	408
H100-01360 - IMPLEMENT PUMP - 175CC	410
H100-01361 - IMPLEMENT PUMP - 175CC	411
H100-01363 - IMPLEMENT PUMP - 175CC	412
H100-01370 - IMPLEMENT PUMP SUCTION	414
H200-00100 - IMPLEMENT PUMP - 175CC HD	415
H100-01380 - IMPLEMENT PUMP COVER - NO AUX PUMP	416
H100-01390 - AUXILARY PUMP - 60CC	417
H100-01391 - 60CC AUXILARY PUMP COMPONENTS	418
H100-01392 - 60CC AUXILARY PUMP COMPONENTS	420
H100-01393 - 60CC AUXILARY PUMP COMPONENTS	422
H100-01394 - 60CC AUXILARY PUMP COMPONENTS	424
H100-01400 - AUXILARY PUMP - 71CC	426
H100-01401 - 71CC AUXILARY PUMP COMPONENTS	427
H100-01402 - 71CC AUXILARY PUMP COMPONENTS	428
H100-01403 - 71CC AUXILARY PUMP COMPONENTS	429
H100-01404 - 71CC AUXILARY PUMP COMPONENTS	430
H100-01405 - 71CC AUXILARY PUMP COMPONENTS	432
H100-01410 - MANIFOLD SINGLE PUMP FLOW	434
H100-01420 - PUMP, TRACK DRIVE - LH (VTG90)	435
H100-01421 - PUMP, TRACK DRIVE - LH (VTG90)	436
H100-01423 - PUMP, TRACK DRIVE - LH (VTG90)	438

Description	Page#
H100-01424 - PUMP, TRACK DRIVE - LH (VTG90)	440
H100-01425 - PUMP, TRACK DRIVE - LH (VTG90)	442
H100-01426 - PUMP, TRACK DRIVE - LH (VTG90)	444
H100-01430 - PUMP, TRACK DRIVE - RH (VTG90)	446
H100-01431 - PUMP, TRACK DRIVE - RH (VTG90)	448
H100-01432 - PUMP, TRACK DRIVE - RH (VTG90)	450
H100-01433 - PUMP, TRACK DRIVE - RH (VTG90)	452
H100-01434 - PUMP, TRACK DRIVE - RH (VTG90)	454
H100-01435 - PUMP, TRACK DRIVE - RH (VTG90)	456
H100-01436 - PUMP, TRACK DRIVE - RH (VTG90)	458
H100-01440 - PUMP, TRACK DRIVE COMPONENTS (VTG90)	460
H100-01441 - PUMP, TRACK DRIVE COMPONENTS (VTG90)	461
H100-01442 - PUMP, TRACK DRIVE COMPONENTS (VTG90)	462
H100-01443 - PUMP, TRACK DRIVE COMPONENTS (VTG90)	463
H100-01450 - SWING PUMP	464
H100-01451 - SWING PUMP COMPONENTS	465
H100-01452 - SWING PUMP COMPONENTS	466
H100-01453 - SWING PUMP COMPONENTS	468
H100-01454 - SWING PUMP COMPONENTS	470
H100-01455 - SWING PUMP COMPONENTS	472
H100-01456 - SWING PUMP COMPONENTS	474
H100-01460 - SWING LOCK-CASE DRAIN MANIFOLD	475
H100-01461 - SWING LOCK-CASE DRAIN MANIFOLD COMPONENTS	476
H100-01470 - CHARGE PUMP	477
H100-01471 - CHARGE PUMP COMPONENTS	478
H100-01473 - CHARGE PUMP SUCTION	479
H100-01480 - CHARGE OIL MANIFOLD	480
H100-01482 - CHARGE OIL MANIFOLD COMPONENTS	481
H100-01490 - MANIFOLD, OIL COOLER CNTRL/SAW STOP	482
H100-01491 - MANIFOLD, OIL COOLER CNTRL/SAW STOP COMPONENTS	483
H100-01500 - RETURN MANIFOLD	484
H100-01510 - GULLWING DOOR HYD PUMP	485
H100-01511 - GULLWING DOOR HYD PUMP COMPONENTS	486
H100-01520 - GULLWING DOOR CYLINDER	487
H100-01521 - GULLWING DOOR CYLINDER COMPONENTS	488
J100-00000 - BULKHEAD FITTING BRACKET	490
J100-00005 - REVOLVING FRAME	491
J100-00006 - SIDE DECK, HD	492
J100-00006 - KIT, FRONT STEP EXT - EU	494
J200-00100 - AUTO GREASE HOSES	496
K100-00000 - CABIN SEAT, SEATS INC	499
K100-00001 - CABIN SEAT, SEATS INC	500
K100-00002 - CABIN SEAT, SEATS INC	502
K100-00003 - CABIN SEAT, SEATS INC	504
K-2241300 - CABIN SEAT - BE-GE	505
K100-00011 - CABIN SEAT - BE-GE	506
K100-00020 - CABIN DOORS	508
K100-00030 - CABIN WINDOWS	510
K100-00040 - CABIN INSULATION	512
K100-00050 - FLOORMAT - FB/TH	514
K100-00060 - CABIN TRIM	516
K100-00065 - CABIN WELDMENT	518
K100-00070 - CABIN MOUNTING	520
K100-00080 - CABIN ENTRY STEP	522
K100-00085 - CABIN NO STEP	523
K100-00090 - JOYSTICKS - TRACK STD	524
K100-00100 - JOYSTICKS - PROCESSOR	525
K100-00110 - CABIN ELECTRICAL COMPONENTS	526
K100-00120 - CABIN WIRE HARNESS	528
K100-00130 - CABIN CONTROLS - TRACK	529

Description	Page#
K100-00140 - CABIN HVAC	530
K100-00141 - CABIN HEATER / AIR CONDITIONING BOX COMPONENTS	531
K100-00142 - HEATER / AIR CONDITIONING CONTROLLER	532
K100-00143 - HEATER / AIR CONDITIONING BINARY SWITCH	533
K100-00144 - HEATER / AIR CONDITIONING BINARY AIR TEMP SENSOR	534
K100-00145 - CABIN HEATER WATER VALVE	535
K100-00146 - AIR CONDITIONING DRIER	536
K100-00147 - AIR CONDITIONING REFRIGERANT DECAL	537
K100-00148 - AIR CONDITIONING / HEATER HOSES	538
K100-00149 - DEROST CABIN FAN	540
K100-00150 - HVAC MOUNTING	541
K100-00160 - CABIN RADIO	542
K100-00170 - CABIN FIRE EXTINGUISHER	543
K4208-2255700 - KOMTRAX COMPONENTS & INSTALLATION	544
K-2255700 - KOMTRAX COMPONENTS & INSTALLATION - (IRIDIUM ANTENNA)	546
M100-00010 - GULLWING DOOR INSTALLATION	548
M100-00020 - GULLWING DOOR DEBRIS GUARDS	550
M100-00030 - GULLWING DOOR EXHAUST TIP	552
M100-00035 - GULLWING WALKWAY	553
M100-00040 - UPPER TURNTABLE DOOR & COVERS	554
M100-00050 - UPPER TURNTABLE DOOR & COVERS	556
M100-00060 - HEAT SHIELD, PADDING, AND TRIM INSTALLATION	558
M100-00070 - STRUCTURE PANELS	559
M-2228700 - UPPER TURNTABLE DOOR & COVERS - (DOOR PROP)	560
N200-00100 - SWING BEARING	564
N200-00100 - SWING BEARING	565
N100-00010 - SWING MOTOR INSTALLATION	566
N100-00011 - SWING MOTOR COMPONENTS	568
N100-00012 - SWING MOTOR COMPONENTS	569
N200-00100 - SWING MOTOR INSTALLATION	570
N100-00020 - ROTARY MANIFOLD INSTALLATION	571
N100-00030 - ROTARY MANIFOLD SWIVEL LOCK ARM	572
P100-00010 - U/C HYD. HOSE U, 11_2 CARBODY, LVL - 48L C/B - 755 LH	574
P100-00020 - U/C HYD. HOSE U, 11_2 CARBODY, LVL - 48L C/B - 755 LH	576
P100-00030 - U/C HYD. HOSE U, 11_2 CARBODY, LVL - 48L C/B - 755 - LEVELING HOSES	578
P100-00040 - U/C HYD. HOSE U, 11_2 CARBODY, LVL - 48L C/B -	580
755 - CARBODY FUEL SYSTEM HOSES	580
P100-00050 - U/C HYD. HOSE U, 11_2 CARBODY, LVL - 48L C/B -	582
755 - LEVELING SYSTEM GREASE HOSES	582
P100-00060 - U/C HYD. HOSE U, 11_2 CARBODY, LVL - 48L C/B -	584
755-LEVELING CYL BASE & ROTARY MAN GREASE HOSES	584
P100-00070 - U/C HYD. HOSE U, 11_0 CARBODY, NL - 48L C/B -	586
755 - TRACK DRIVE HOSES	586
P100-00070 - U/C HYD. HOSE U, 11_0 CARBODY, NL - 48L C/B -	588
755 - TRACK DRIVE HOSES	588
P100-00080 - U/C HYD. HOSE U, 11_0 CARBODY, NL - 48L C/B - 755 - FUEL HOSES	590
P100-00090 - U/C HYD. HOSE U, 11_2 CARBODY, LVL - 51L C/B - 755 - TRACK DRIVE HOSES	592
P100-00090 - U/C HYD. HOSE U, 11_2 CARBODY, LVL - 51L C/B - 755 - TRACK DRIVE HOSES	594
P100-00100 - U/C HYD. HOSE U, 11_2 CARBODY, LVL - 51L C/B -	596
755 - CARBODY FUEL HOSES	596
P100-00110 - U/C HYD. HOSE U, 11_2 CARBODY, LVL - 51L C/B -	598
755 - LEVELING SYSTEM GREASE HOSES	598
P100-00120 - U/C HYD. HOSE U, 11_2 CARBODY, LVL - 51L C/B -	600
755-LEVELING CYL BASE & ROTARY MAN GREASE HOSES	600
R100-00050 - TRACK SLIDER - L.P. (11'0" CARBODY) - TL735D, TL-745D	603
R100-00060 - TRACK SLIDER - TN735D, TN745D, TN755D	604
R200-00100- TRACK SLIDER - TL755, TL755WC, 775	605
R100-00280 - TRACK SHOE D7 48 LINK 600MM SG - 745D, 755D	606

Description	Page#
R100-00290 - TRACK SHOE D7 48 LINK 600MM HD SG - 745D, 755D	608
R100-00300 - TRACK SHOE D7 48 LINK 600MM SG - 745D, 755D	610
R100-00310 - TRACK RAIL W/SHOE D7 48 LINK 600MM TALL - 745D, 755D	612
R100-00330 - TRACK SHOE D7 48 LINK 700MM HD SG - 745D, 755D	614
R100-00340 - TRACK SHOE D7 48 LINK 700MM HD SG - 745D, 755D	616
R100-00360 - TRACK SHOE D7 48 LINK 700MM HD DG - 745D, 755D	618
R100-00380 - TRACK SHOE D7 48 LINK 850MM HD TG - 745D, 755D	620
R100-00390 - TRACK SHOE D7 48 LINK 900MM TG - TN745D, TN755D	622
R100-00400 - TRACK SHOE D7G 48 LINK TRILINK 900MM TG - TN745D, TN755	624
R200-00100 - TRACK SHOE D7 51 LINK 600MM TN755D WEST COAST	626
R200-00210 - TRACK SHOE D7 51 LINK 700MM TN755D WEST COAST	628
R200-00220 - TRACK SHOE D7 51 LINK 710MM TN755D WEST COAST	630
R200-00100 - 11’0 NL CARBODY	632
R200-00100 - 11’0 NL CARBODY	633
R200-00100 - CARBODY, G, 11’2” (LVL NON-TETHERED)	634
R200-00100 - 11’2” LVL TRUNK LID	635
R200-00100 - LEVELING CENTER FRAME	636
R200-00100 - 11’2” LVL TRUNK LID	637
R200-00540 - TRACK FRAME 8.5P, 48L	638
R200-00540 - TRACK FRAME 8.5P, 51L	639
R100-00130 - TRACK ROLLER ASSEMBLY INSTALLATION (755)	640
R-2233600-SP - TRACK FRAME LOWER ROLLERS - (755 WEST COAST)	642
R100-00530 - TRACK FRAME FRONT IDLER ASSEMBLY AND INSTALLATION (755 & 755 WEST COAST)	644
R100-00530 - TRACK FINAL DRIVE ASSEMBLY AND INSTALLATION (755 & 755 WEST COAST)	646
R-2233600-SP - TRACK FINAL DRIVE COMPONENTS - (755 & 755 WEST COAST)	648
R-2233600-SP - TRACK DRIVE MOTOR COMPONENTS - (755 & 755 WEST COAST)	650
R-2233600-SP - TRACK DRIVE MOTOR COMPONENTS - (755 & 755 WEST COAST)	652
R-2233600-SP - TRACK DRIVE MOTOR COMPONENTS - (755 & 755 WEST COAST)	654
R200-00100 - DEBRIS DEFLECTORS	656
R100-00660 - TRACK CHUTE U. 11’2” D7 LEVELING	658
R200-00200 - LEVELING COMPONENTS	660
R200-00201 - LEVELING CYLINDER COMPONENTS	662
T100-00010 - MAIN BOOM - (HD) FELLER BUNCHER	665
T100-00020 - BOOM GUARDING - (HD) FELLER BUNCHER	666
T100-00030 - MAIN BOOM INSTALLATION - (HD) FELLER BUNCHER	668
T100-00040 - MAIN BOOM - HARVESTOR	670
T1110-2239200 - MAIN BOOM - HARVESTOR - (4.00” BUSHING BORES)	671
T100-00050 - MAIN BOOM BOOM GUARDING - HARVESTOR	672
T100-00060 - MAIN BOOM BOOM INSTALLATION - HARVESTOR	673
T100-00070 - MAIN BOOM BOOM CYLINDER - 150MM	674
T100-00070 - MAIN BOOM BOOM CYLINDER COMPONENTS - 150MM	676
T100-00080 - MAIN BOOM BOOM CYLINDER - 165MM BORE	677
T100-00081 - MAIN BOOM BOOM CYLINDER COMPONENTS - 165MM	678
T100-00090 - MAIN BOOM BOOM CYLINDER INSTALLATION - FELLER BUNCHER	680
T100-00100 - MAIN BOOM CYLINDER INSTALLATION - HARVESTOR	681
T100-00110 - STICK BOOM CYLINDER - 130MM BORE	682
T100-00111 - STICK BOOM CYLINDER COMPONENTS - 130MM BORE	683
T100-00120 - STICK BOOM CYLINDER - 140MM BORE	684
T100-00121 - STICK BOOM CYLINDER COMPONENTS - 140MM BORE	685
T100-00130 - STICK BOOM - FELLER BUNCHER	686
T100-00140 - STICK BOOM TOOL TILT CYLINDER COMPONENTS	688
T100-00150 - GREASE LINE KIT - FELLER BUNCHER / CONTROL FALL PROCESSOR	690
T100-00151 - ARM ASSEMBLY, FB, HD, U - (TANGUAY HD)	691
T100-00160 - STICK BOOM FOUR BAR LINK GREASE FITTINGS	692
T100-00170 - FELLER BUNCHER / CONTROL FALL PROCESSOR - LIGHT INSTALLATION	693
T100-00170 - FIXED PROCESSOR STICK BOOM	694
T100-00180 - FIXED PROCESSOR STICK BOOM - LIGHT INSTALLATION	695
T100-00190 - PROCESSOR SQUIRT BOOM	696
T100-00200 - PROCESSOR SQUIRT BOOM LIGHT INSTALLATION	697
T100-00201 - PROCESSOR SQUIRT BOOM COMPONENTS	698

Description	Page#
T100-00202 - PROCESSOR SQUIRT BOOM CYLINDER COMPONENTS	700
T100-00210 - STICK BOOM CYLINDER - 130MM BORE	702
T100-00211 - STICK BOOM CYLINDER COMPONENTS - 130MM BORE	703
T100-00220 - STICK BOOM CYLINDER - 140MM BORE	704
T100-00221 - STICK BOOM CYLINDER COMPONENTS - 140MM BORE	705
T100-00224 TOOL TILT CYLINDER COMPONENTS - (TANGUAY)	706
T100-00230 - STICK BOOM CYLINDER AND CYLINDER INSTALLATION	708
T200-00100 - STICK BOOM CYLINDER HYD FLANG BLOCKS - TANGUAY	709
T200-00105 ARM CYLINDER COMPONENTS - (TANGUAY HD)	710
T200-00100 - STICK BOOM CYLINDER HYD FLANG BLOCKS - TANGUAY	712
U100-00021 - MODEL DECAL TN755D	715
U100-00021 - MODEL DECAL TL755D	715
U100-00021 - MODEL DECAL TL755D	716
U100-00023 - GULLWING, DECALS	717
U100-00022- BOOM, DECALS	717
U100-00024 - LOGO & WEB	717
U100-00025 - DECAL, DASH	718
U100-00026 - CAB DECALS	718
U100-00028 - OUTSIDE DECALS	719
U100-00060 - SERIAL PLATE	720
W100-00010 - ESPAR HEATER	722
W100-00011 - ESPAR HEATER COMPONENTS	724
W100-00011 - ESPAR HEATER COMPONENTS	726
W200-00020 - HYD TANK FILL PUMP	728
W300-00030 - DAFO DISTRIBUTION COMPONENTS	730
W300-00040 - DAFO DISTRIBUTION, DETECTION / ACTUATION CABLE INSTALLATION	732
W300-00050 - DAFO DISTRIBUTION, DETECTION / ACTUATION CABLE INSTALLATION	734
W300-00045 - DAFO DISTRIBUTION, THERMAL BLANKET	736
W400-00060 - HYD TANK VACUUM PUMP	738
W400-00061 - HYD TANK VACUUM PUMP COMPONENTS	739
W500-00000 - FIRE EXTINGUISHER - 2.5 GAL	740
W500-00010 - FIRE EXTINGUISHER - 10LB	741
W600-00000 - AUTO LEVELING	742

ENGINE - (A)

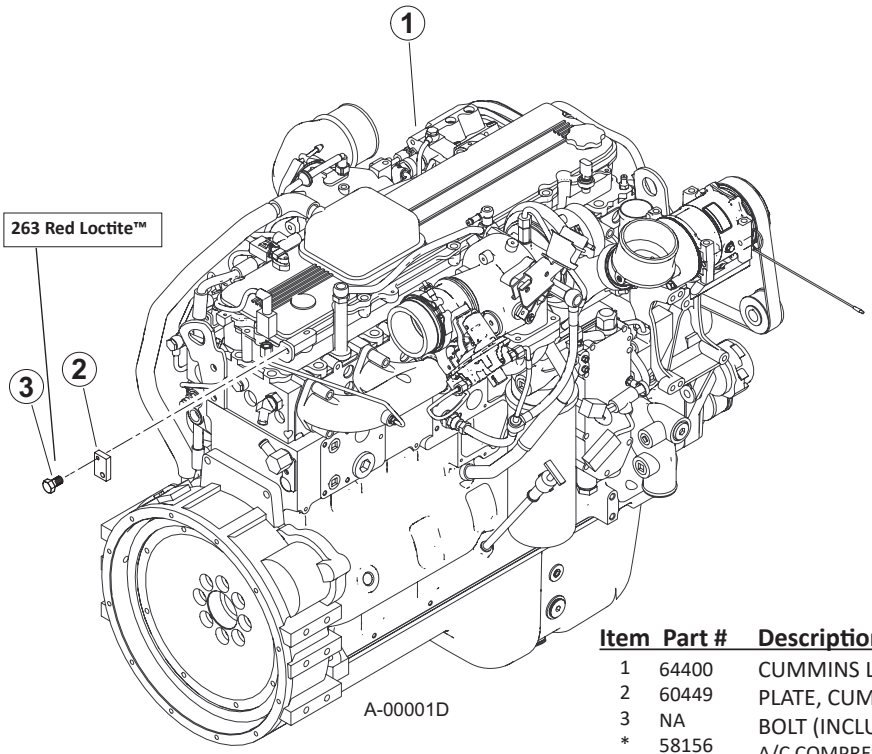

A100-00000 - ENGINE

Item	Part #	Description	QTY.
1	64400	CUMMINS L9 STAGE V - 350 HP, G	1
2	60449	PLATE, CUMMINS RELOCATION PLATE	1
3	NA	BOLT (INCLUDED WITH ENGINE **263 RED LOCTITE™**	1
*	58156	A/C COMPRESSOR	1
*	3400698	ALTERNATOR	1
*	56074	STARTER	1

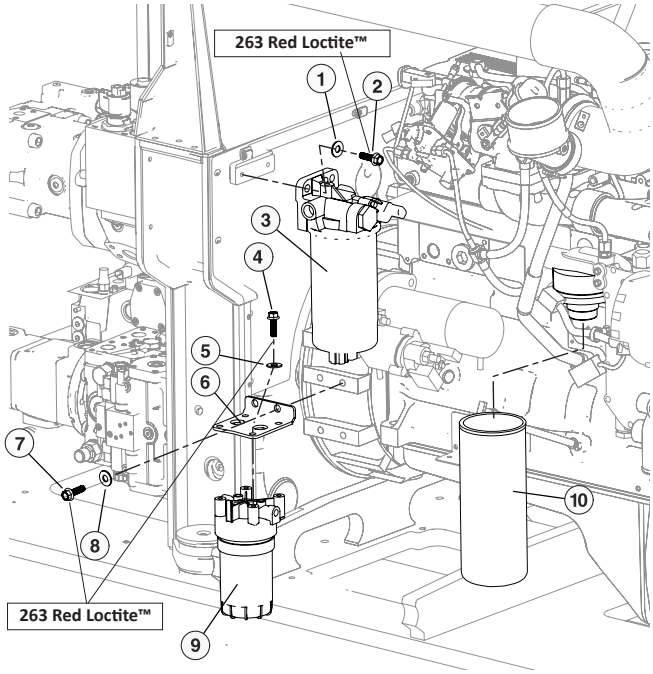

A100-00010 - ENGINE FILTERS

Item	Part #	Description	QTY.
1	15528	WASHER, SAE FLAT	2
2	10402	BOLT **263 RED LOCTITE™**	2
3	58052	FUEL PRO FILTER - STAGE 1	1
4	25059	BOLT **263 RED LOCTITE™**	4
5	15559	WASHER, SAE FLAT	4
6	60405	MOUNT, FILTER - FUEL	1
7	15556	BOLT **263 RED LOCTITE™**	2
8	18735	WASHER, FLAT	2
9	58053	STAGE II FUEL FILTER	1
10	58054	OIL FILTER	1

ENGINE RELATED PARTS - (B)

B100-00000 - ENGINE HYDRAULIC FITTINGS

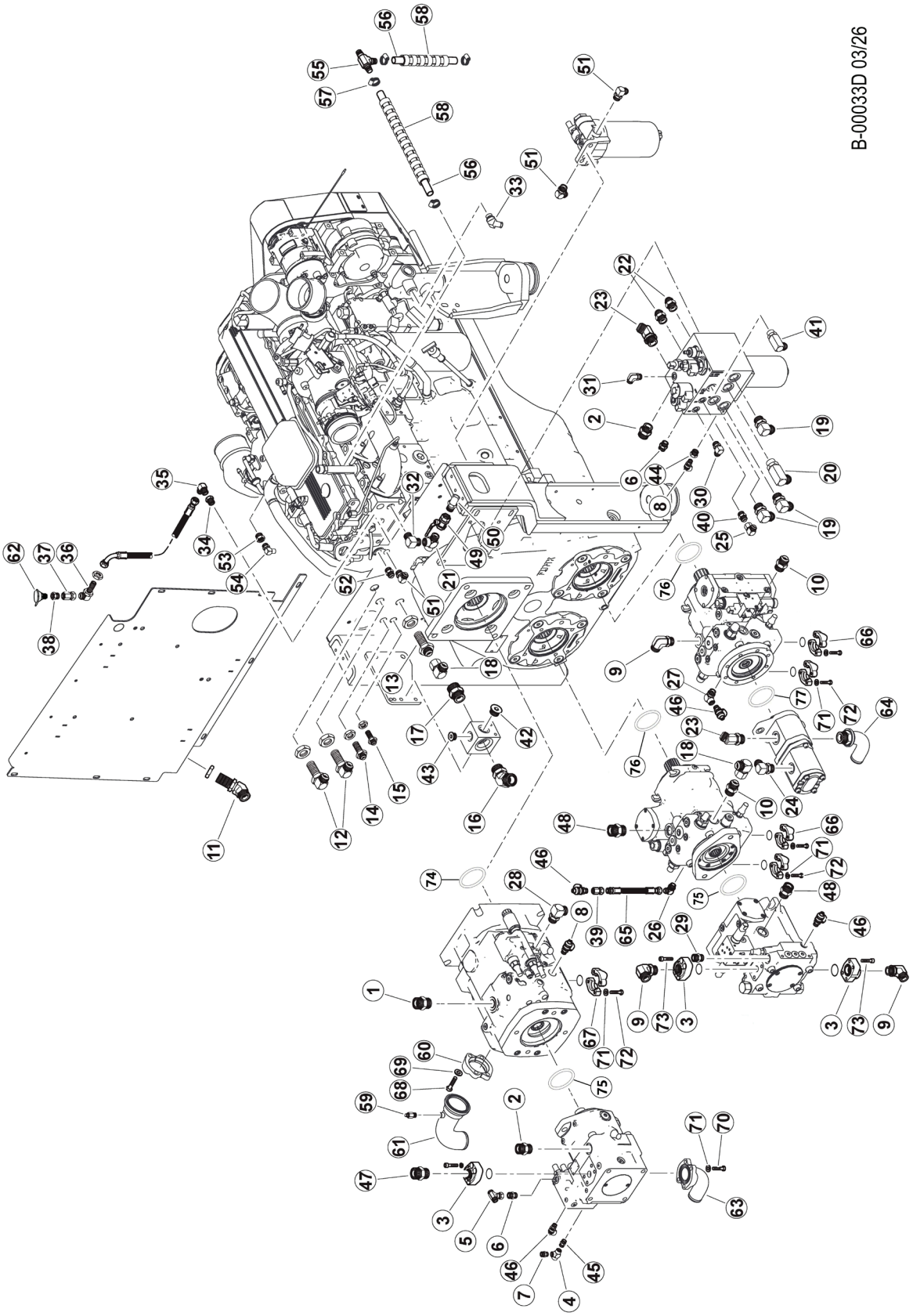

B-00033D 03/26

ADD MOLUB-ALLOY PASTE WHITE T, TO THE SPIINES ON ALL PUMPS

NOTE: HYDRAULIC FITTINGS GET 545 LOCTITE™

B100-00000 - ENGINE HYDRAULIC FITTINGS

Item	Part #	Description	Qty.
1	15225	CONNECTOR, STR - FF1852T-1616S	1
2	16851	CONNECTOR, STR - FF1852T-1210S	1
3	19808	CONNECTOR, FLANGE PAD -FP62-12-12ORB-MK	3
4	52186	TEE, RUN - MALE (4 A0G5J5-S)	1
5	23541	TEE - 4 S6LO-S	1
6	15124	CONNECTOR, STR - FF1852T-0406S	1
7	55214	CONNECTOR, STR - 848-TTO-04X04 (W/.031)	1
8	57820	TAP, GAUGE PORT # 6 SAE - Oring Boss	2
9	17688	ELBOW, 90 - FF1868T-1212S	2
10	15494	CONNECTOR, STR - 6400-12-10	2
11	54316	ELBOW, BULKHEAD UNION 45DEG #16	1
12	54704	ELBOW, 90 BULK 12 WETX-WLN-S	2
13	17009	CONNECTOR, STR BULKHEAD - 2700-12	1
14	50420	CONNECTOR, STR BULKHEAD - 832-TT-06	1
15	18582	CONNECTOR, STR BULKHEAD - FF1994T-0404S	1
16	17056	ELBOW, 45 - FF2068T-2020S	1
17	17344	CONNECTOR, STR - FF1852T-2020S	1
18	15477	CONNECTOR, STR - FF1852T-2020S	1
19	11306	ELBOW, 90 12 C5OX-S	3
20	12-CC5OX-5	ELBOW, 90 12 C5OX-S (LONG)	1
21	51879	TEE, RUN - .5” (1/2 MR0-S)	1
22	11324	CONNECTOR, STR - 6400-12	2
23	15474	ELBOW, 45 - 6802-12	1
24	53032	ELBOW, 90 - 12 JIC X 10 ORB	1
25	20035	ELBOW, 90 SWIVEL - 6 C6LO-S	1
26	16540	ELBOW, 90 - FF1868T-0404S	1
27	57641	FITTING, EBLOW - FEMALE 4-AOEG5-S	1
28	16296	ELBOW, 90 - FF1868T-0606S	1
29	15117	CONNECTOR, STR - FF1852T-0808S	1
30	15133	ELBOW, 90 - FF1868T-0406S	1
31	16296	ELBOW, 90 - FF1868T-0606S	1
32	52785	ELBOW, MALE PIPE - ¾ X ½ CR-S	1
33	57805	FITTING, 179HB-10-8	1
34	11312	BUSHING, REDUCER - 5406-8-4	1
35	55206	FITTING, ELBOW - 6 CTX-S	1
36	55347	FITTING, ELBOW - BULKHEAD 6 WETX-WLN-S	1
37	57422	FITTING, 6-6 G6X-S	1
38	11318	BUSHING, REDUCER - 5406-6-4	1
39	58023 (KIT)	CONNECTOR, STR	1
40	18034	CONNECTOR, STR - FF1852T-0606S	1
41	57445	FITTING, 8 CC5OLO-S	1
42	15584	PLUG - 6408-HHP-12	1
43	18949	PLUG - 6408-HHP-8	1
44	55345	FITTING, MALE SAE X FEMALE SAE	1
45	16294	BUSHING, REDUCER - 6410-6-4	1
46	57819	TAP, GAUGE PORT - #4 SAE Oring Boss- ST	4
47	18406	CONNECTOR, STR - FF1852T-1612S	1
48	15152	CONNECTOR, STR - FF1852T-1212S	1
49	51714	VALVE, BALL - WATER SHUT OFF HEATER 1/2”	1

B100-00000 - ENGINE HYDRAULIC FITTINGS

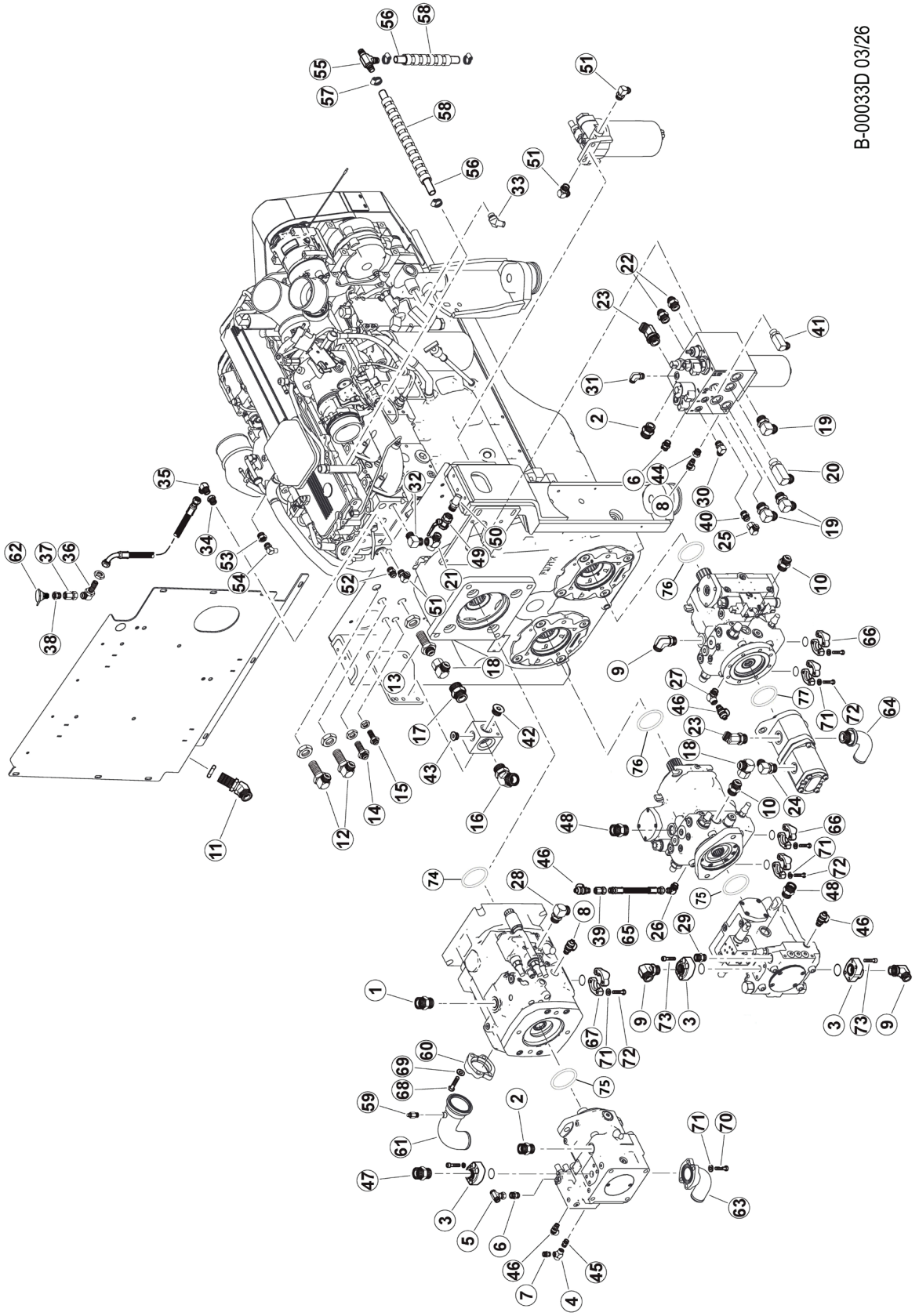

B-00033D 03/26

ADD MOLUB-ALLOY PASTE WHITE T, TO THE SPIINES ON ALL PUMPS

NOTE: HYDRAULIC FITTINGS GET 545 LOCTITE™

B100-00000 - ENGINE HYDRAULIC FITTINGS

Item	Part #	Description	Qty.
50	51774	CONNECTOR, STR HOSE BARB - .5 X 5/8	1
51	53073	ELBOW, 90 6-JIC X 10-ORB	2
52	53103	FITTING, 6-8 - ORB-JIC	1
53	58388	REDUCER, M27-2 (M) ORING - 1/2 NPTF(F)	1
54	58389	ELBOW, 1/2 (M)NPTF - 3/8” TUBE (PUSH ON)	1
55	57902	TEE, HOSE BARB - 3/8”	1
56	55411	HOSE, COOLENT - 3/8”	AR
57	16202	CLAMP, HOSE - WORM STYLE - .625”	4
58	27846	WRAP, SPIRAL HOSE - 3/8”I.D. .052” WALL	AR
59	55615	FITTING, ADAPTOR - BLEED - SUCTION TUBE	1
60	58139	FLANGE, 13001H-5656K 175CC PUMP 57865	1
61	57880	TUBE, SUCTION SERIES 40 175cc PUMP	1
62	21304	BREATHER, PUMP TRANSMISSION -TRIPLE PUMP	1
63	55713	FLANGE, ELBOW - 1988-32-32	1
64	57663	FITTING, ELBOW - HOSE END 90°	1
65	58063	HOSE, GAUGE PORT EXTENSION	1
66	15113	KIT, SPLIT FLANGE - 1” (CODE 62)	1
67	15114	KIT, SPLIT FLANGE - 1.25” (CODE 62)	1
68	58378	BOLT - 5/8-11 X 1 3/4” HEX HEAD	4
69	10771	WASHER, SAE FLAT - .625”	4
70	10739	BOLT - .5” X 1.5”	4
71	10710	WASHER, LOCK - .5”	24
72	10736	BOLT - .5” X 2”	20
73	35337	SOC HD C/SCR	4
74	15442-2	O-RING, PUMP DRIVE PILOT - DRIVE	1
75	19491	ORING, THRU-DRIVE - 55458	2
76	53718	ORING, TRACK DRIVE PUMP PILOT	2
77	21624	O-RING, CHARGE PUMP PILOT (AA4VG90)	2

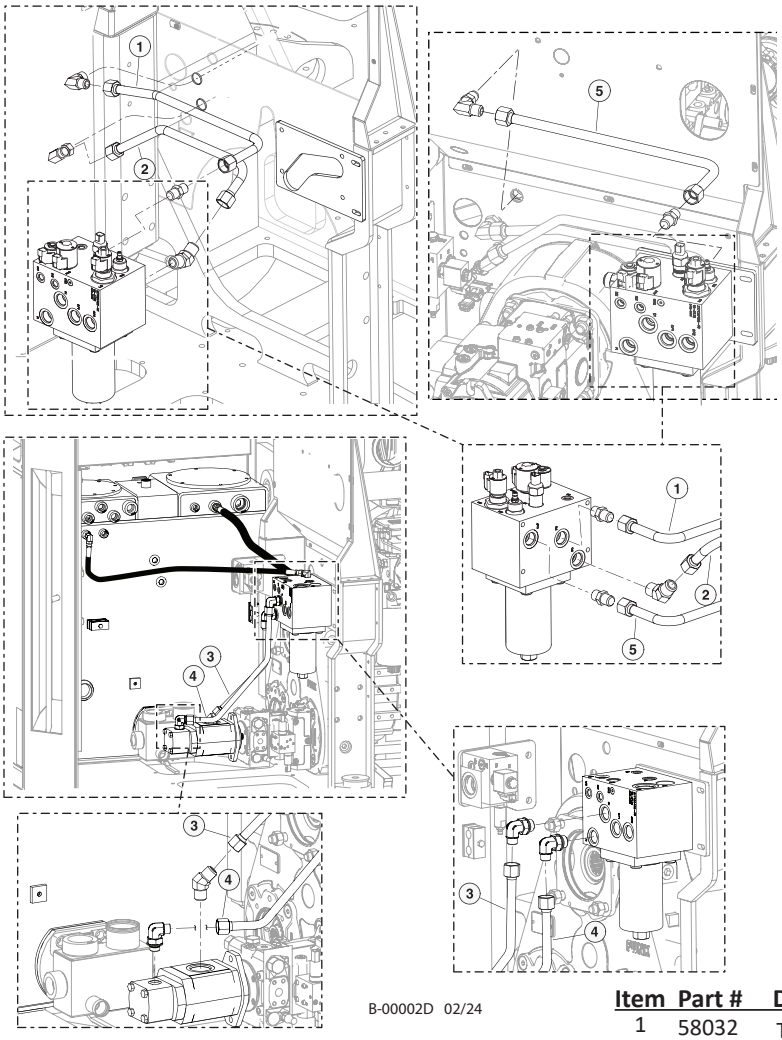

B-00002D 02/24

B100-00000 - ENGINE HYDRAULIC FITTINGS

NOTE: HYDRAULIC FITTINGS GET 545 LOCTITE™

Item	Part #	Description	QTY.
1	58032	TUBELINE, FR TO BULKHEAD FAN RETURN	1
2	57929	TUBELINE, F0 TO BULKHEAD FAN PRESSURE	1
3	57928	TUBELINE, F1 TO FRONT GEAR PUMP FAN PRES	1
4	57927	TUBELINE, C1 TO REAR GEAR PUMP	1
5	57931	TUBELINE, T2 TO BULKHEAD	1

B100-00020 - CHARGE PIPING - DRIVE PUMPS (MACHINE BUILD DATES UP TO 07/11/24)

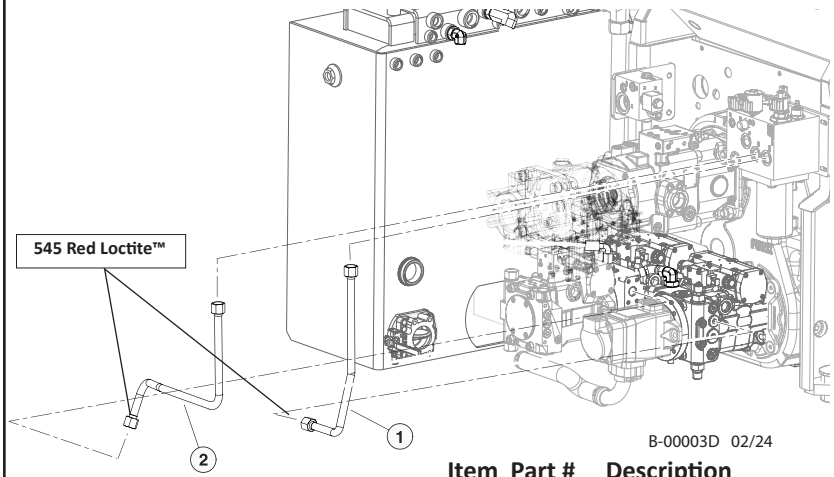

B-00003D 02/24

Item	Part #	Description	QTY.
1	57924	TUBELINE, FA2 TO RIGHT TRACK PUMP **545 RED LOCTITE™**	1
2	57925	TUBELINE, FA1 TO LEFT TRACK PUMP **545 RED LOCTITE™**	1

B100-00030 - CHARGE PUMP PIPING (MACHINE BUILD DATES 07/12/24 AND FORWARD)

NOTE: HYDRAULIC FITTINGS GET 545 LOCTITE™

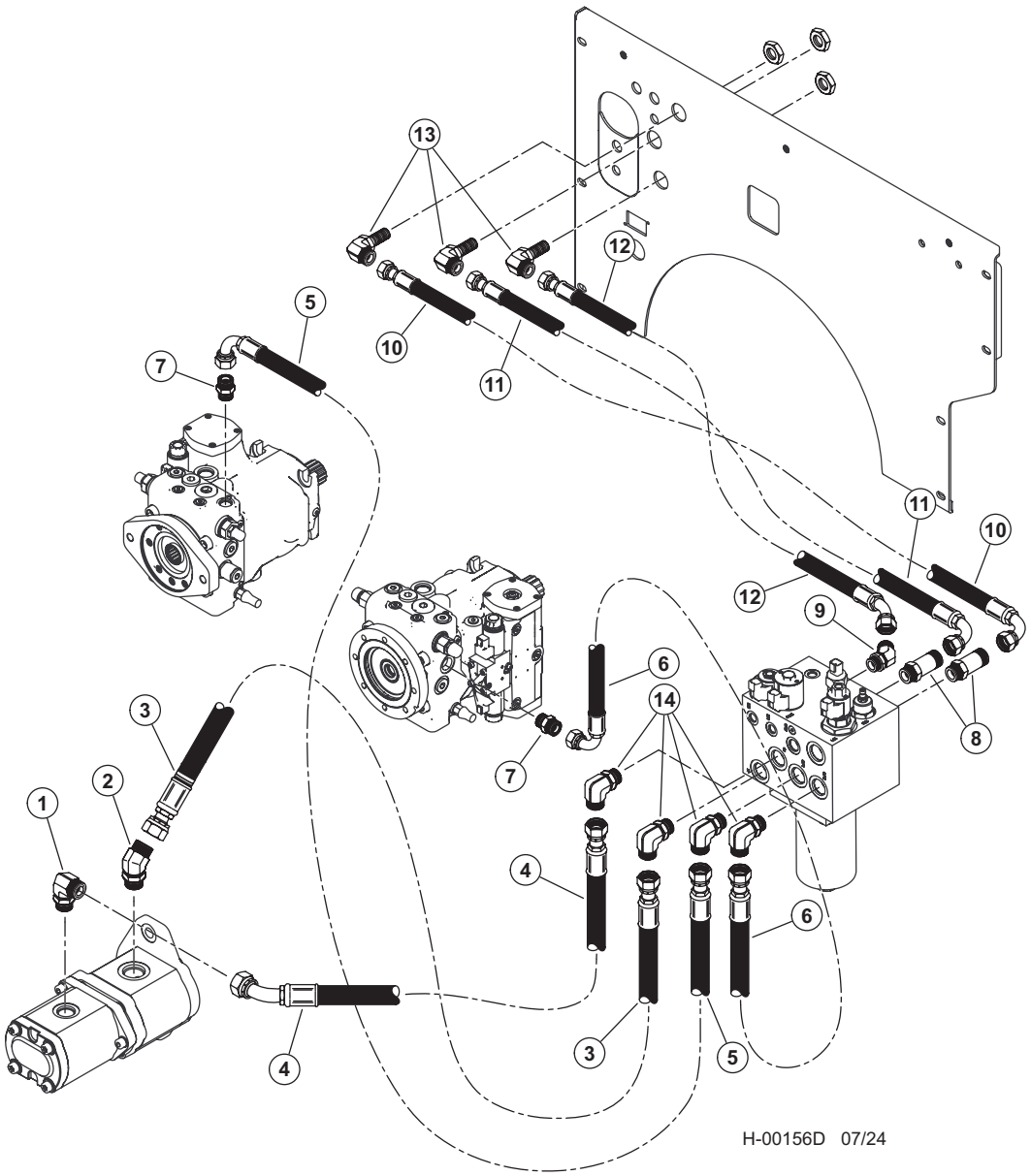

Item	Part #	Description	Qty.
	65696	HOSE KIT, ENGINE TRACK MACHINE	1
1	53032	ELBOW, 90 - 12 JIC X 10 ORB	1
2	15474	ELBOW, 45 - 6802-12	1
3	656850	HOSE, HYD, 722TC16.5 12-12JS-12JS	1
4	656900	HOSE, HYD, 187TC22 12-12JS-12J4	1
5	656890	HOSE, HYD, 187TC30 12-12JS-12J9	1
6	656880	HOSE, HYD, 187TC18.5 12-12JS-12J9	1
7	15494	CONNECTOR, STR - 6400-12-10	2
8	19092	CONNECTOR, STR LONG - 848L-TTO-12X12	2
9	19127	ELBOW, 45 - FF2068T-1212S	1
10	656870	HOSE, HYD, 187TC20.5 12-12JS-12J9	1
11	656860	HOSE, HYD, 187TC19 12-12JS-12J9	1
12	656840	HOSE, HYD, 722TC19 12-12JS-12J4	1
13	54704	ELBOW, 90 BULK 12 WETX-WLN-S	3

B100-00040 - ENGINE FUEL HOSES

NOTE: HYDRAULIC FITTINGS GET 545 LOCTITE™

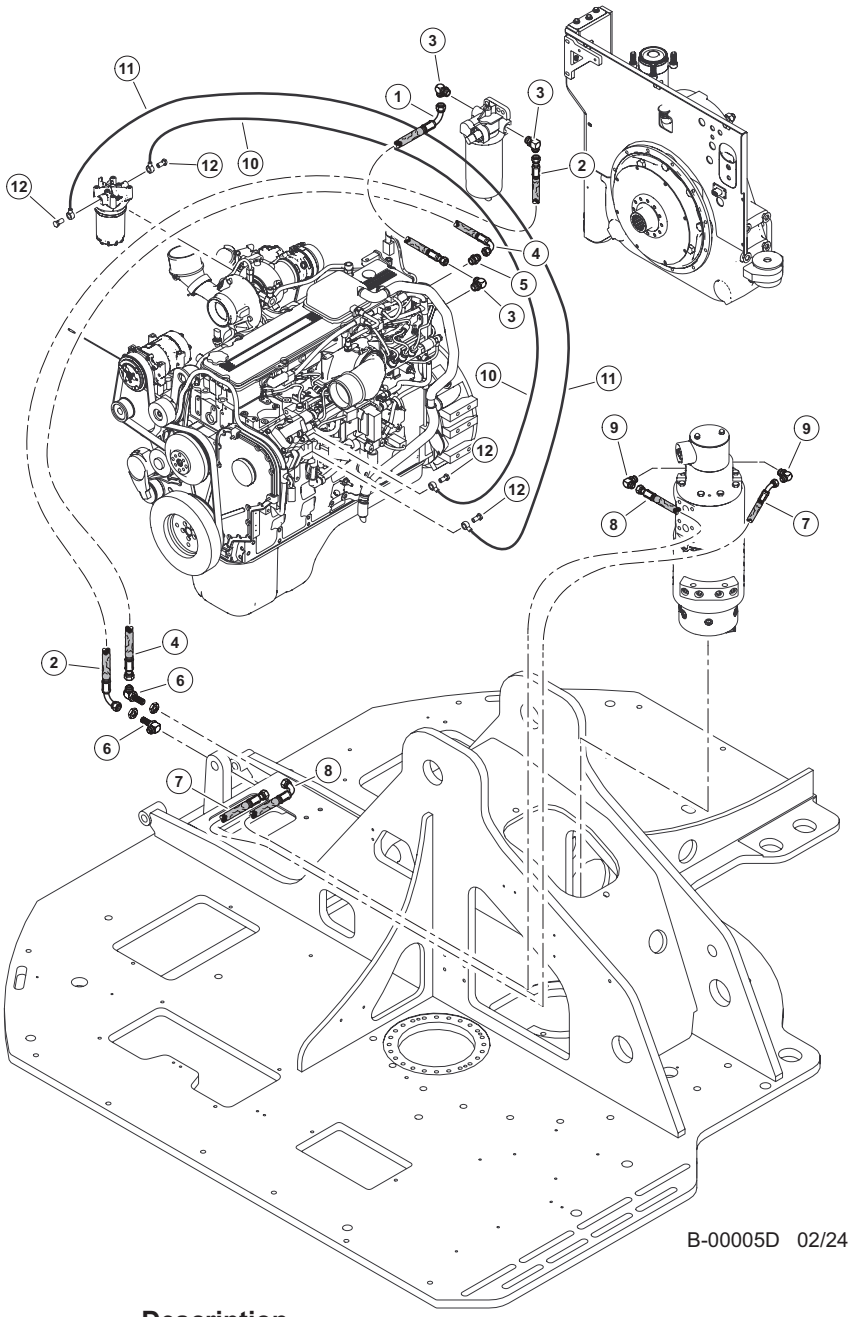

Item	Part #	Description	Qty.
1	(HOSE KIT - 57998)	HOSE ASSEMBLY - 221FR25 06-06JS-06J9-W	1
2	(HOSE KIT - 57998)	HOSE ASSEMBLY - 221FR35 06-06JS-06J9-W	1
3	53073	ELBOW, 90 6-JIC X 10-ORB	3
4	(HOSE KIT - 57998)	HOSE ASSEMBLY - 221FR28 06-06JS-06J9-W	1
5	53103	FITTING, 6-8 - ORB-JIC 830-B	1
6	55347	FITTING, ELBOW - BULKHEAD 6 WETX-WLN-S	2
7	65797 - (65792 - KIT)	HOSE, HYD, 221FR81 06-06FJ-06FJ4-W - **(FUEL SUPPLY TO RM)**	1
8	65798 - (65792 - KIT)	HOSE, HYD, 221FR81 06-06FJ-06F9-W - **(FUEL RETURN TO RM)**	1
9	15480	ELBOW, 90 - 6801-6	2
10	**SEE DESCRIPTION**	FUEL HOSE ASSEMBLY (Contact your Cummins dealer for replacement part)	-
11	**SEE DESCRIPTION**	FUEL HOSE ASSEMBLY (Contact your Cummins dealer for replacement part)	-
12	**SEE DESCRIPTION**	FUEL HOSE FITTING (Contact your Cummins dealer for replacement part)	-

B-2220000, B-2221000 - ENGINE PANELS

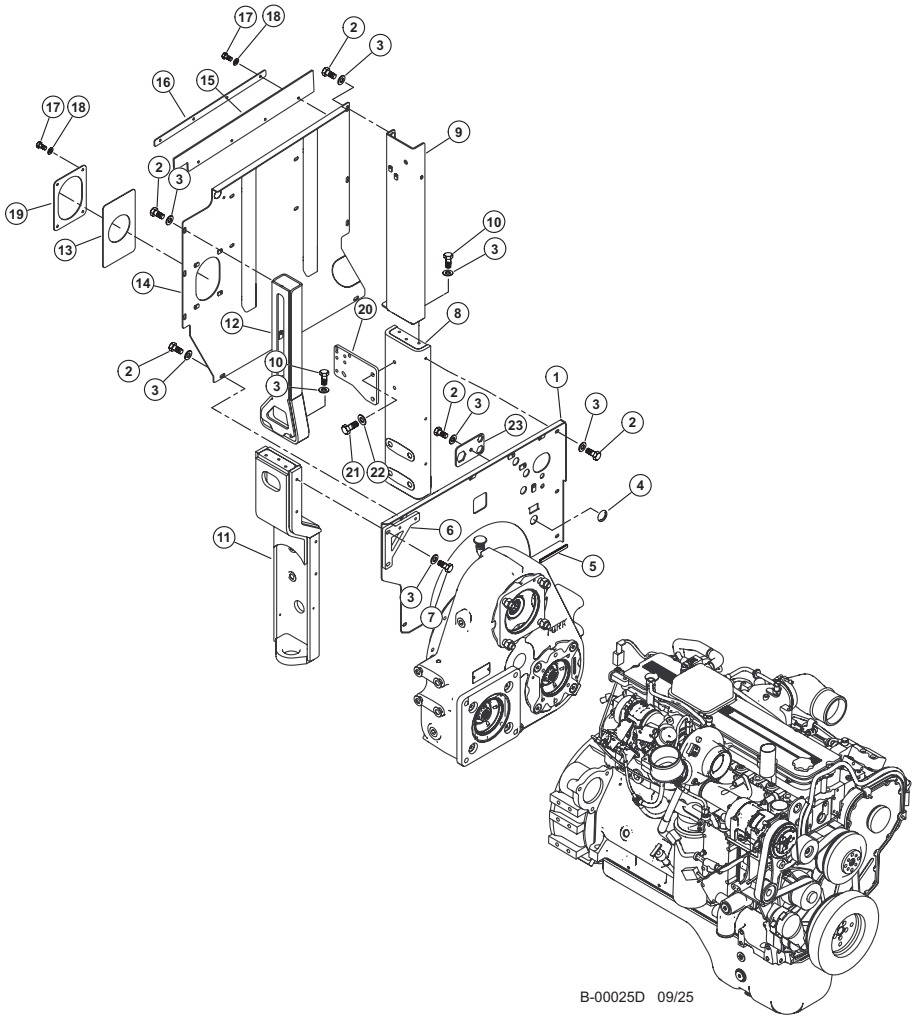

Item	Part #	Description	Qty.
1	603960	WELDMENT, ENGINE BARRIER PANEL - STD	1
2	15542	BOLT - .375” X .75” **263 RED LOCTITE™**	13
3	15528	WASHER, SAE FLAT - .375”	21
4	42514	GROMMET, .875 I.D.	1
5	53214	CHANNEL, EDGE PROTECTOR	6”
6	60540	PLATE, FUEL FILTER SPACER	1
7	10402	BOLT - .375” X 1.25” **263 RED LOCTITE™**	2
8	60300	MOUNT, ENGINE - INNER REAR	1
9	603920	WELDMENT, FIREWALL UPRIGHT	1
10	11707	BOLT - .375” X 1” **263 RED LOCTITE™**	6
11	60295	MOUNT, ENGINE - REAR	1
12	60389	WELDMENT, G-BOX UPPER - D SERIES	1
13	673430	SHEET, RUBBER SEAL	1
14	632950	WELDMENT, UPPER FIREWALL	1
15	47206	RUBBER, ENGINE BARRIER	1
16	47205	BAR, BARRIER PANEL - ENGINE	1
17	15604	BOLT - .25” X .75” **263 RED LOCTITE™**	8
18	10757	WASHER, SAE FLAT - .25”	8
19	673440	PLATE, SEAL SLOT	1
20	60444	MOUNT, MANIFOLD	1
21	50100	BOLT - .5" X 1.25" **263 RED LOCTITE™**	2
22	10805	WASHER, FLAT - .625"	2
23	670830	LOCK PLATE, STRAIGHT BULKHEAD - STD	1

B100-00060 - ENGINE INSTALLATION

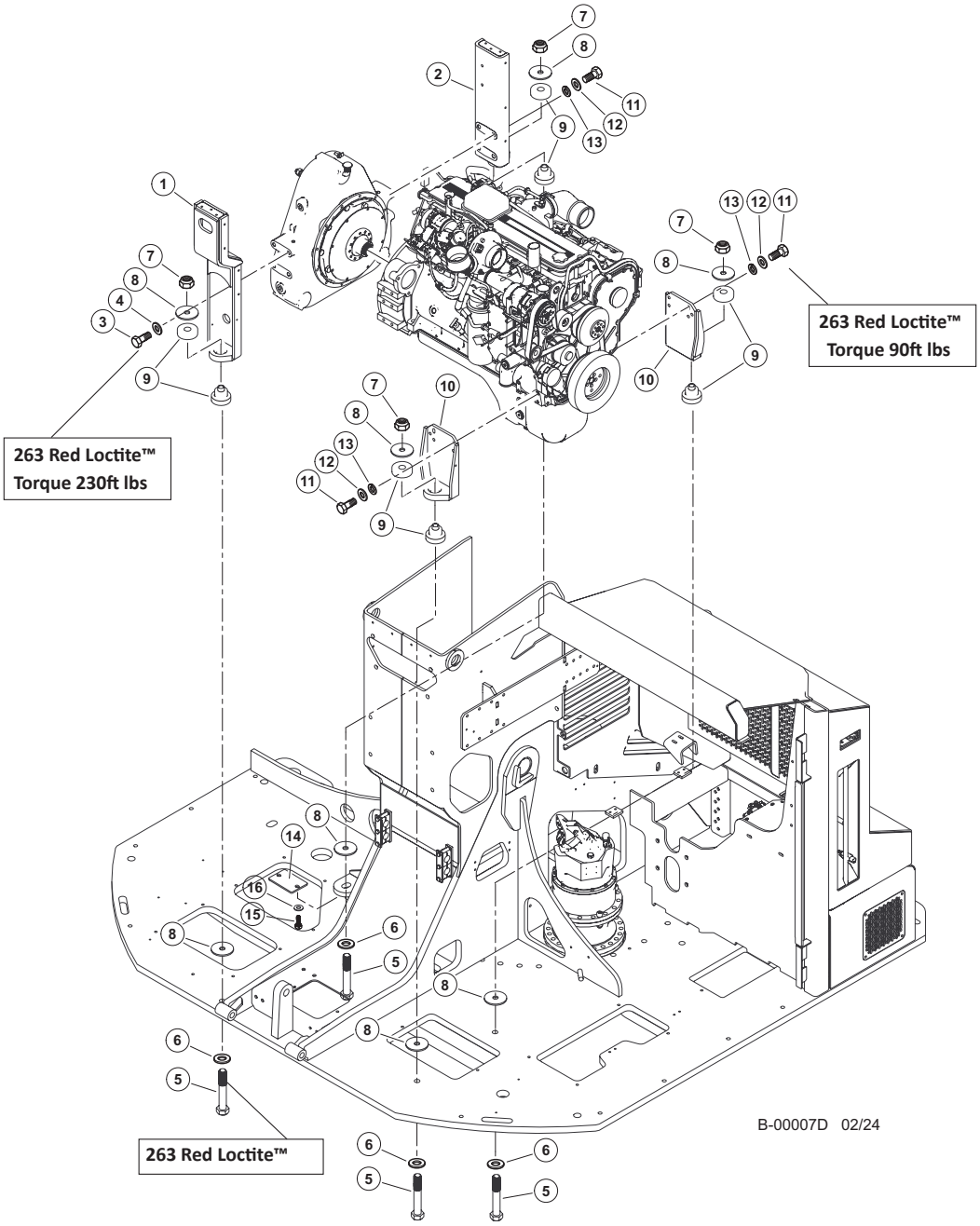

Item	Part #	Description	Qty.
1	60295	MOUNT, ENGINE - REAR	1
2	60392	PLATE, UPPER G-BOX 2 - D SEREIS	1
3	58378	BOLT - 5/8-11 X 1 3/4" HEX HEAD **263 RED LOCTITE™ (TORQUE 230FT LBS)**	8
4	10771	WASHER, SAE FLAT - .625"	8
5	21540	BOLT - .875" X 6" **263 RED LOCTITE™**	4
6	10718	WASHER, SAE FLAT - .875"	4
7	50334	NUT, LOCK .875"	4
8	60268	WASHER, ENGINE MOUNT	8
9	60270	ISOLATOR, ENGINE MOUNT	4
10	60269	MOUNT, ENGINE - FRONT	2
11	15551	BOLT - 12MM-1.75P X 40MM **263 RED LOCTITE™ (TORQUE 90FT LBS)**	8
12	18735	WASHER, FLAT - 12MM	8
13	53760	WASHER, ENGINE MOUNT - SHURE-LOK	8
14	60558	COVER, RETAINER	1
15	23264	BOLT - .25" X .5"	2
16	10757	WASHER, SAE FLAT - .25"	2

B100-00070 - ENGINE SHROUD

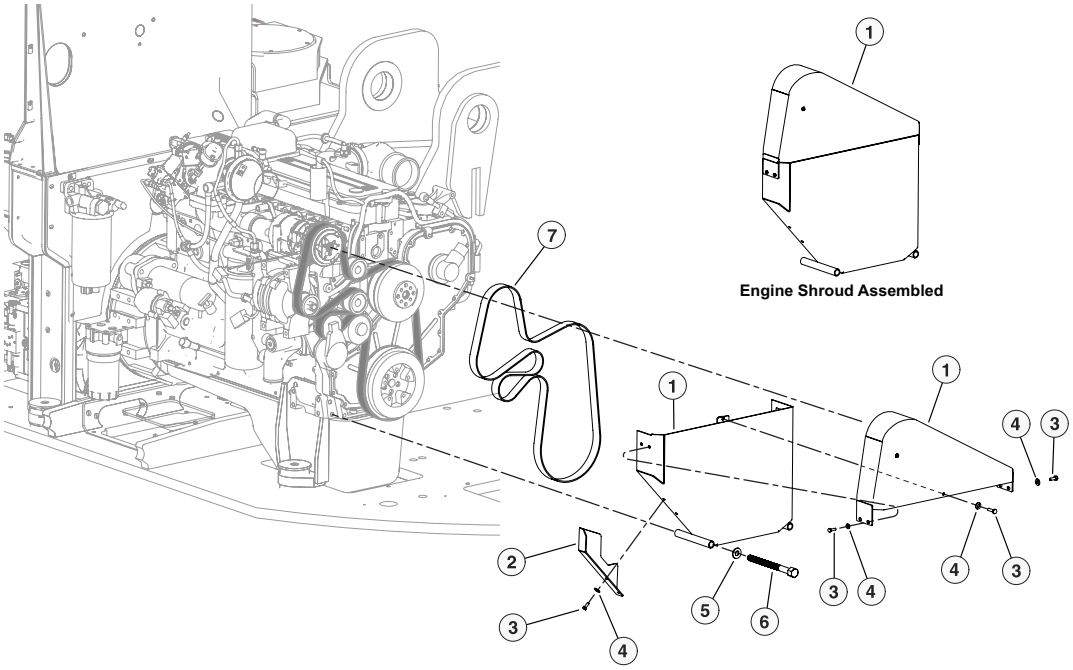

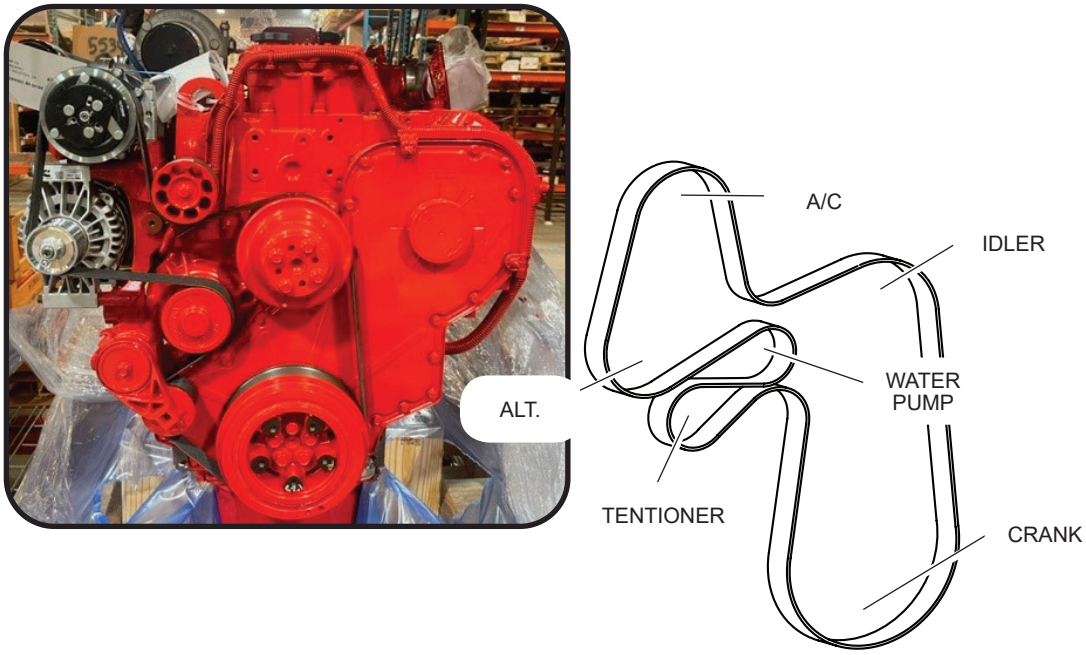

Item	Part #	Description	Qty.
1	60780	GUARD, FAN - STAGE 5	1
2	46288	SHROUD, FAN - BOTTOM	1
3	15604	BOLT - .25" X .75"	2
4	10757	WASHER, SAE FLAT - .25"	2
5	51772	BOLT - 12MM X 180MM FAN GUARD	1
6	18735	WASHER, FLAT - 12MM	1
7	59058	BELT, ENGINE	1

B100-00080 - ENGINE AIR INTAKE

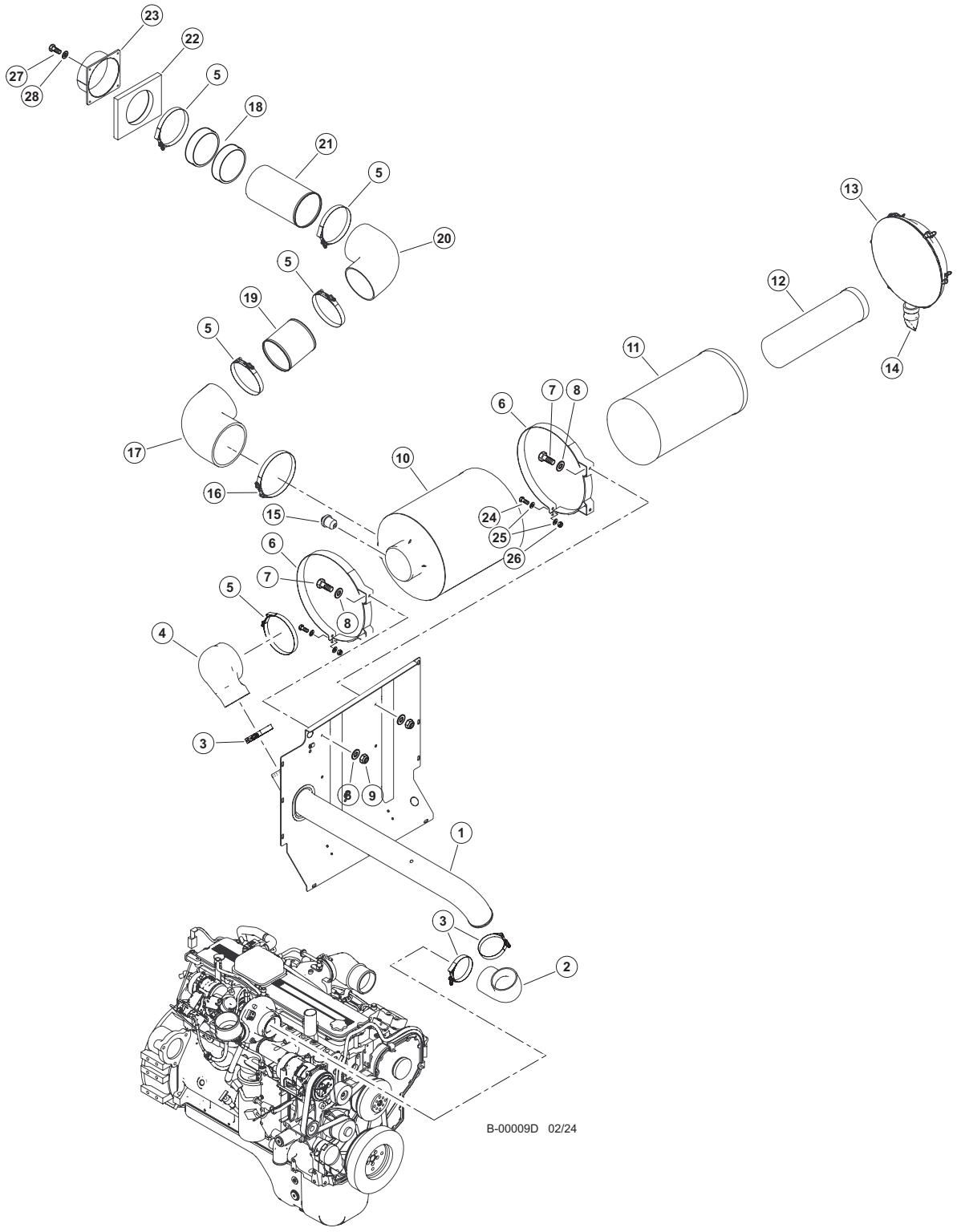

B100-00080 - ENGINE AIR INTAKE

Item	Part #	Description	Qty.
1	63299	TUBE, AIR CLEANER TO TURBO - WELDMENT	1
2	55634	ELBOW, RUBBER - 4” x 4” - CUMMINS	1
3	15697	CLAMP, STRAP BAND - 4.5”	3
4	58981	ELBOW, RUBBER - COBRA 6” X 4”	1
5	58030	CLAMP, T-BOLT - AIR INTAKE ELBOWS	5
6	58260	BAND, AIR CLEANER - TAILSWNG STG V	2
7	11704	BOLT - .375” X 1”	4
8	10802	WASHER, FLAT - .375”	8
9	10813	NUT, LOCK - .375”	4
10	58136	AIR CLEANER ASSEMBLY - STAGE V	1
11	58276	FILTER, AIR CLEANER - PRIMARY	1
12	58277	FILTER, AIR CLEANER - SECONDARY	1
13	58275	COVER, AIR CLEANER	1
14	16608	BOOT, AIR CLEANER DUST	1
15	16114	INDICATOR, AIR CLEANER FILTER SERVICE	1
16	59004	CLAMP, T-BOLT - 750 SIZE - LRG AIR CLEAN	1
17	58985	ELBOW, RUBBER 7X6 90DEG	1
18	42378	WEATHERSTRIPPING, WINDOW 5/16x3/4x500’	38”
19	60548	TUBE, 6” - AIR INTAKE	1
20	57495	ELBOW, RUBBER - 90 DEGREE 6” X 6”	1
21	63303	TUBE, AIR CLEANER 6” X 11” D-MOD	1
22	47344	FOAM	AR
23	60820	AIR INTAKE	1
24	15591	BOLT - .3125” X 1.5”	2
25	10801	WASHER, FLAT - .3125”	4
26	10812	NUT, LOCK - .3125”	2
27	15604	BOLT - .25” X .75”	4
28	10757	WASHER, SAE FLAT - .25”	4

B100-00090 - ENGINE AFTER TREATMENT

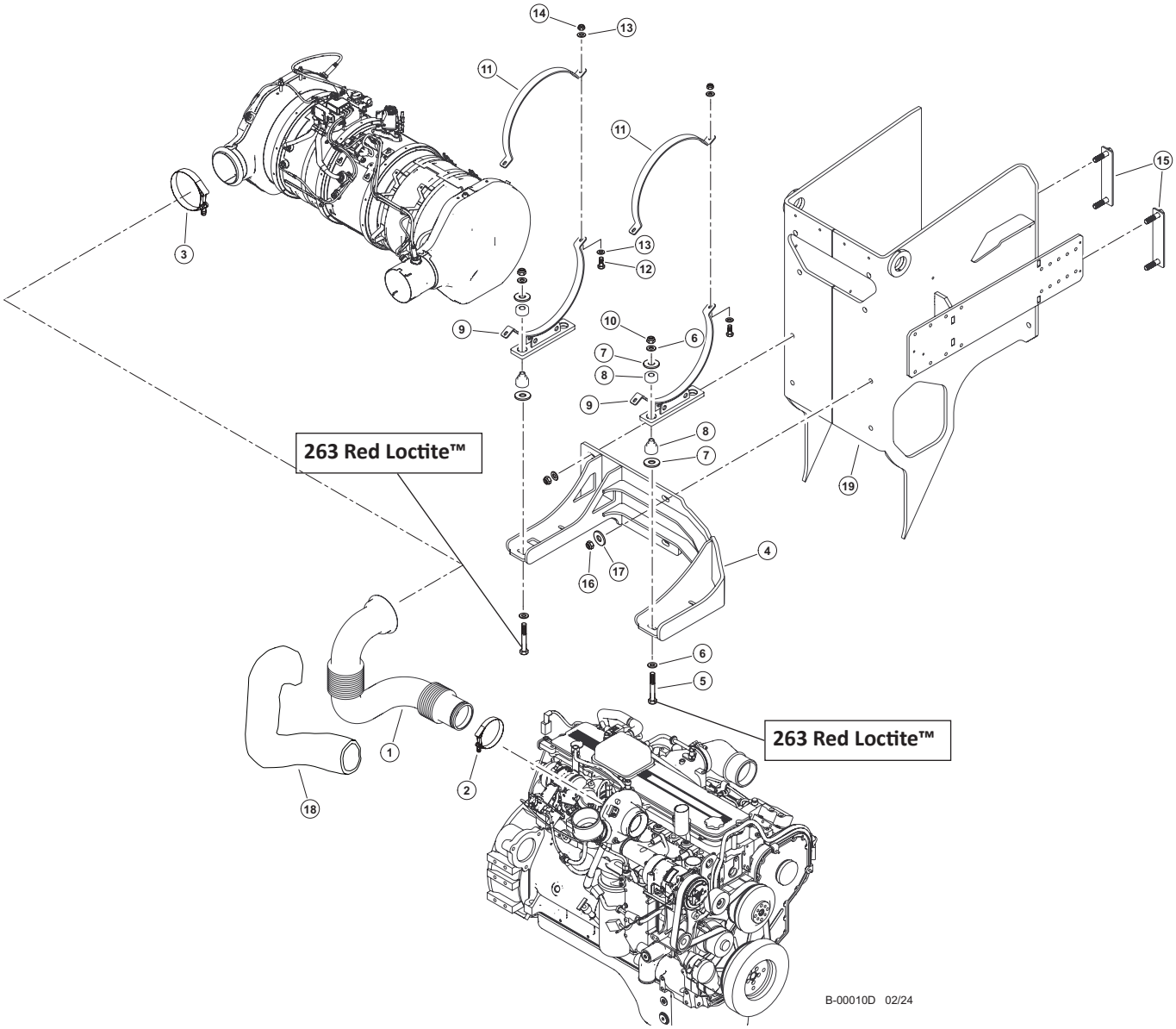

Item	Part #	Description	Qty.
1	60260	PIPE, EXHAUST TURBO TO DOC	1
2	**SEE DESCRIPTION**	CLAMP (Contact your Cummins dealer for replacement part)	-
3	**SEE DESCRIPTION**	CLAMP (Contact your Cummins dealer for replacement part)	-
4	65395	WELDMENT, ATFER TREATMENT MOUNT	1
5	15553	BOLT - .5" X 3.5" **263 RED LOCTITE™**	4
6	10804	WASHER, FLAT - .5"	8
7	46674	WASHER, FENDER - ISOLATOR	8
8	55560	ISOLATOR, RUBBER - MUFFLER - T4F	4
9	60380	WELDMENT, SCR MTG CLAMP	2
10	10815	NUT, LOCK - .5"	4
11	60381	STRAP, SINGLE CAN MOUNT - AFTER TREATMENT	2
12	10822	BOLT - .3125" X 1.25"	4
13	10801	WASHER, FLAT - .3125"	8
14	10812	NUT, LOCK - .3125"	4
15	60109	PLATE, SCR STUD	2
16	10816	NUT, LOCK - .625"	4
17	10805	WASHER, FLAT - .625"	4
18	57841	INSULATION, EXHAUST PIPE	1
19	47975	WELDMENT, BOOM SURRROUND D-STAGE 5	1

B-2220700 - PTO PUMP DRIVE

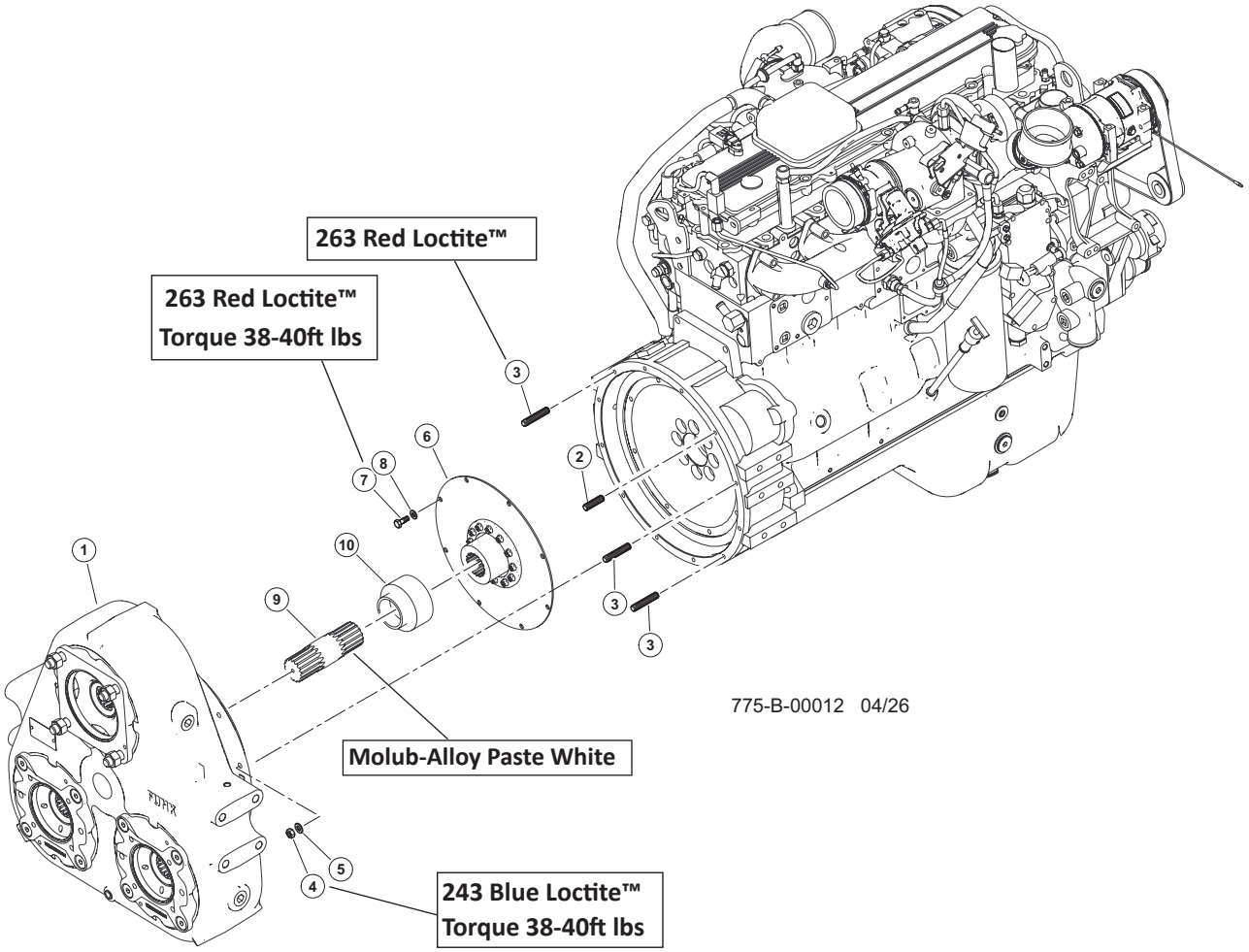

Item	Part #	Description	Qty.
1	58980	TRANSMISSION, TRIPLE PUMP DRIVE (2000 rpm)	1
2	15531	STUD, 10MM -1.5P X 45MM	1
3	59093	STUD, M10-1.5X60MM **263 RED LOCTITE™**	11
4	15530	NUT, HEX - 10MM-1.5P **243 BLUE LOCTITE™ (TORQUE 38-40FT LBS)**	12
5	23722	WASHER, LOCK -10MM	12
6	18028	DRIVEPLATE ASSY.	1
7	15542	BOLT - .375" X .75" **263 RED LOCTITE™ (TORQUE 38-40FT LBS)**	8
8	15528	WASHER, SAE FLAT - .375"	8
	***(MUST VERIFY SHAFT BEFORE PLACING ORDER)**		
9	*65144	STANDARD SHAFT, 175 PUMP	1
9	*65157	LONG SHAFT, 175 PUMP	1
10	65483	SEAL, GREASE - PUMP DRIVE	1

B-2220700-SP - PTO PUMP DRIVE

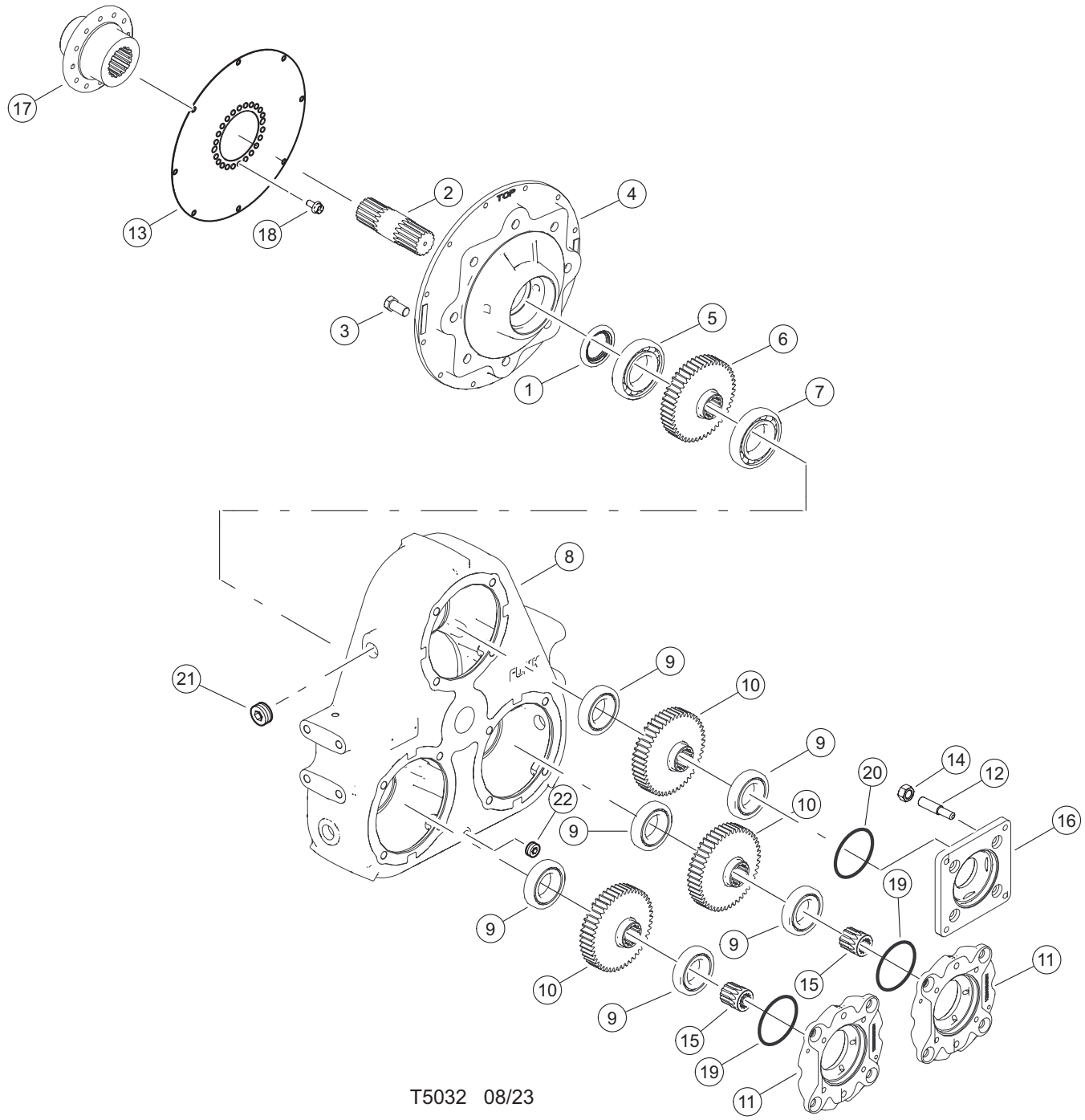

T5032 08/23

B-2220700-SP - PTO PUMP DRIVE

REF	PART #	QTY	DESCRIPTION
*	58980	1	TRANSMISSION, TRIPLE PUMP DRIVE (2000 rpm)
1	18027	4	SEAL
2	18388	1	SHAFT
3	F1008024	8	FASTENER
4	YZ590193	1	COVER, engine adapter housing (See Note #2 Below)
5	18891	1	BEARING
6	57766	1	CENTER GEAR
7	18892	1	BEARING
8	YZ102009	1	HOUSING
9	YZ104564	6	BEARING
(MUST VERIFY INPUT GEARS USED ON MACHINE)			
10	65388	3	INPUT GEAR
11	54767	2	COVER, BOTTOM
12	18293	4	THREADED STUD
13	18028	1	DRIVE PLATE
14	F13015000	4	NUT
15	16330	2	ADAPTOR SLEEVE
16	57898	1	PAD, PUMP DRIVE BOX - REXROTH 175CC IMP
17	YZ100938	1	PINION FLANGE YOKE
18	YZ280039	12	FASTENER
19	F37030248	2	O-RING
20	F37030258	1	O-RING
21	F1900316	4	PLUG
22	F202004	1	PLUG, DRAIN

Note #1:
Use Loctite™ 272 (blue) during installation.

Note #2:
Use Silicone sealant during installation.

Note #3:
Use teflon sealant during installation.

B100-00103 - TRIPPLE DRIVE GEARBOX BREATHER

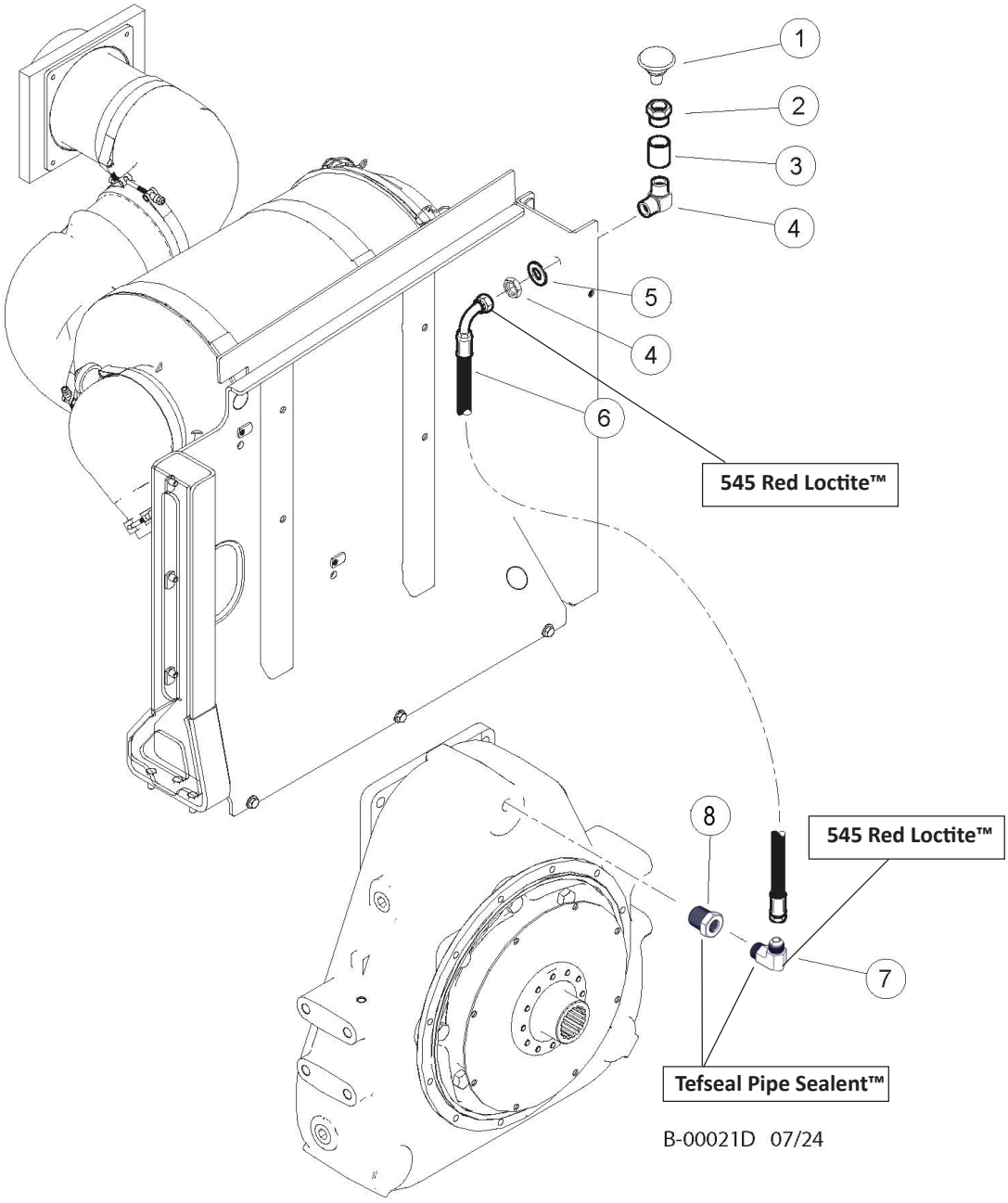

Item	Part #	Description	Qty.
1	21304	BREATHER, PUMP TRANSMISSION -TRIPLE PUMP	1
2	11318	BUSHING, REDUCER - 5406-6-4	1
3	57422	FITTING, 6-6 G6X-S	1
4	55347	FITTING, ELBOW - BULKHEAD 6 WETX-WLN-S	1
5	23210	5/8” TRU TORQ, EXTRA THICK FLAT WASHER: 15/64” THICK, 21/32” ID, 1 5/16”	1
6	65938 - (65868 - KIT)	HOSE, HYD, 387TC38 06-06JS-06J9 **(BREATHER) 545 RED LOCTITE™**	1
7	55205	FITTING, ELBOW - 6 CTX-S **TEFSEAL PIPE SEALENT™**	1
8	11312	BUSHING, REDUCER - 5406-8-4 **TEFSEAL PIPE SEALENT™**	1

B200-00100 - PTO PUMP DRIVE

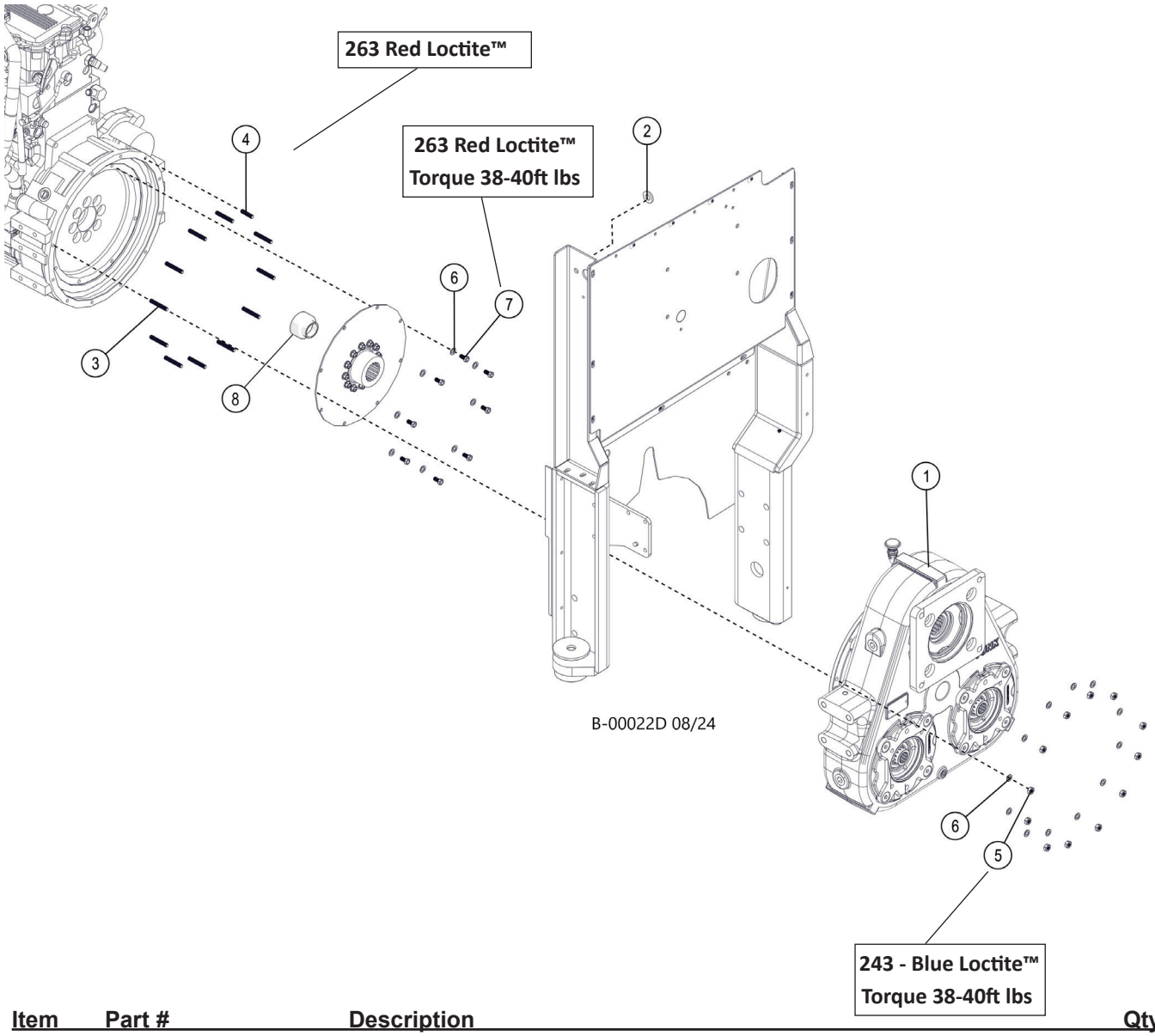

Item	Part #	Description	Qty.
1	58980	TRANSMISSION, TRIPLE DRIVE - 765 175cc	1
2	23210	WASHER, SAE FLAT - .625” (EXTRA THICK)	1
3	59093	STUD, M10-1.5X60MM	11
4	15531	STUD, 10MM -1.5P X 45MM **263 RED LOCTITE™**	1
5	15530	NUT, M10x1.5 HEX **243 BLUE LOCTITE™ (TORQUE 38-40FT LBS)**	12
6	15528	WASHER, SAE FLAT - .375”	20
7	15542	BOLT - .375” X .75” **263 RED LOCTITE™ (TORQUE 38-40FT LBS)**	8

B100-00110 - HEATER HOSES

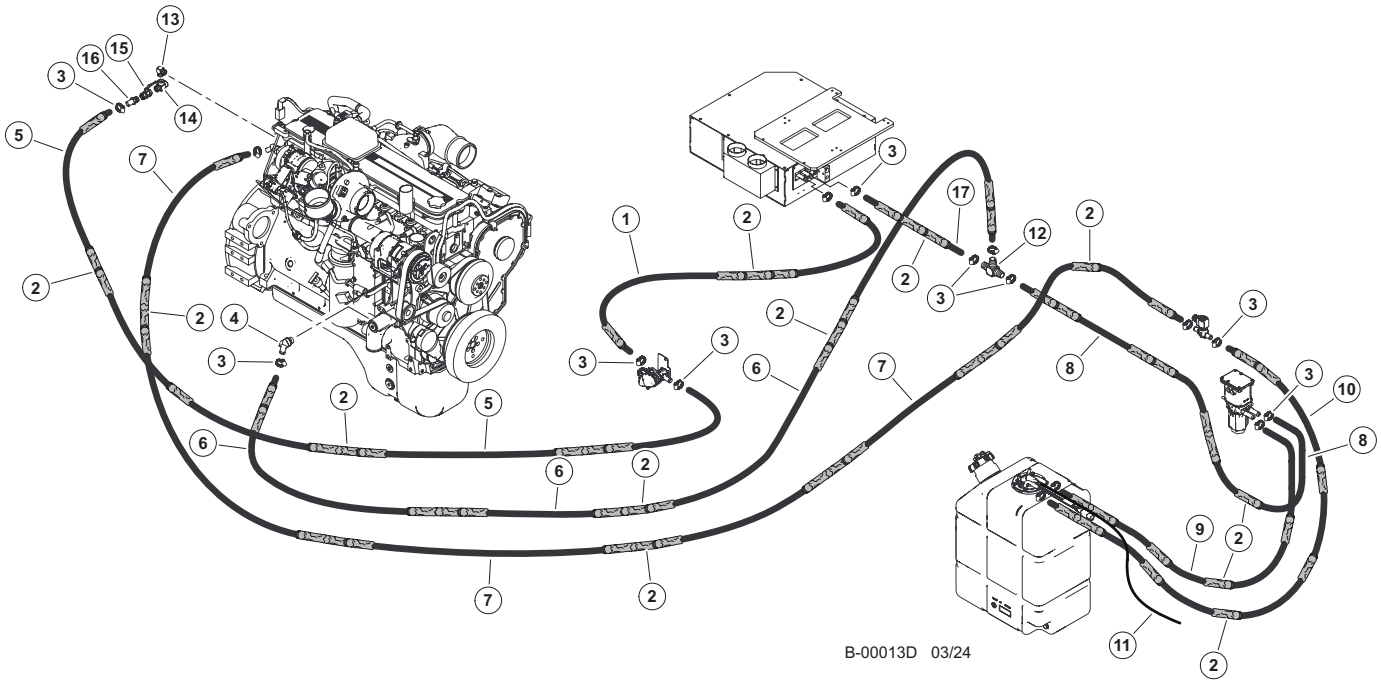

Item	Part #	Description	Qty.
1	BH-565	5/8” HEATER HOSE	1
2	50188	SLEEVE, PROTECTIVE HOSE	AR
3	58977	CLAMP, HOSE - AC UPDATE	16
4	57805	FITTING, 179HB-10-8	1
5	54780	HOSE, HEATER - 5/8” X 110” WRAPPED	1
6	54780	HOSE, HEATER - 5/8” X 110” WRAPPED	1
7	58114	HOSE, HEATER 5/8 X 140 WRAPPED SCR VALVE	1
8	58024	HOSE, HEATER - 5/8” X 64” (GATES 28473)	1
9	58024	HOSE, HEATER - 5/8” X 64” (GATES 28473)	1
10	58024	HOSE, HEATER - 5/8” X 64” (GATES 28473)	1
11	16238	HOSE, VENT (BULK ROLL) - .3125”	3’
12	57903	TEE, HOSE BARB - 5/8” PIPE	1
13	52785	ELBOW, MALE PIPE - ¾ X ½ CR-S	1
14	51879	TEE, RUN - .5” (1/2 MR0-S)	1
15	51714	VALVE, BALL - WATER SHUT OFF HEATER 1/2”	1
16	51774	CONNECTOR, STR HOSE BARB - .5 X 5/8 (830	1
17	BH-566	5/8” HEATER HOSE	1

B100-00120 - ENGINE SHIELDS

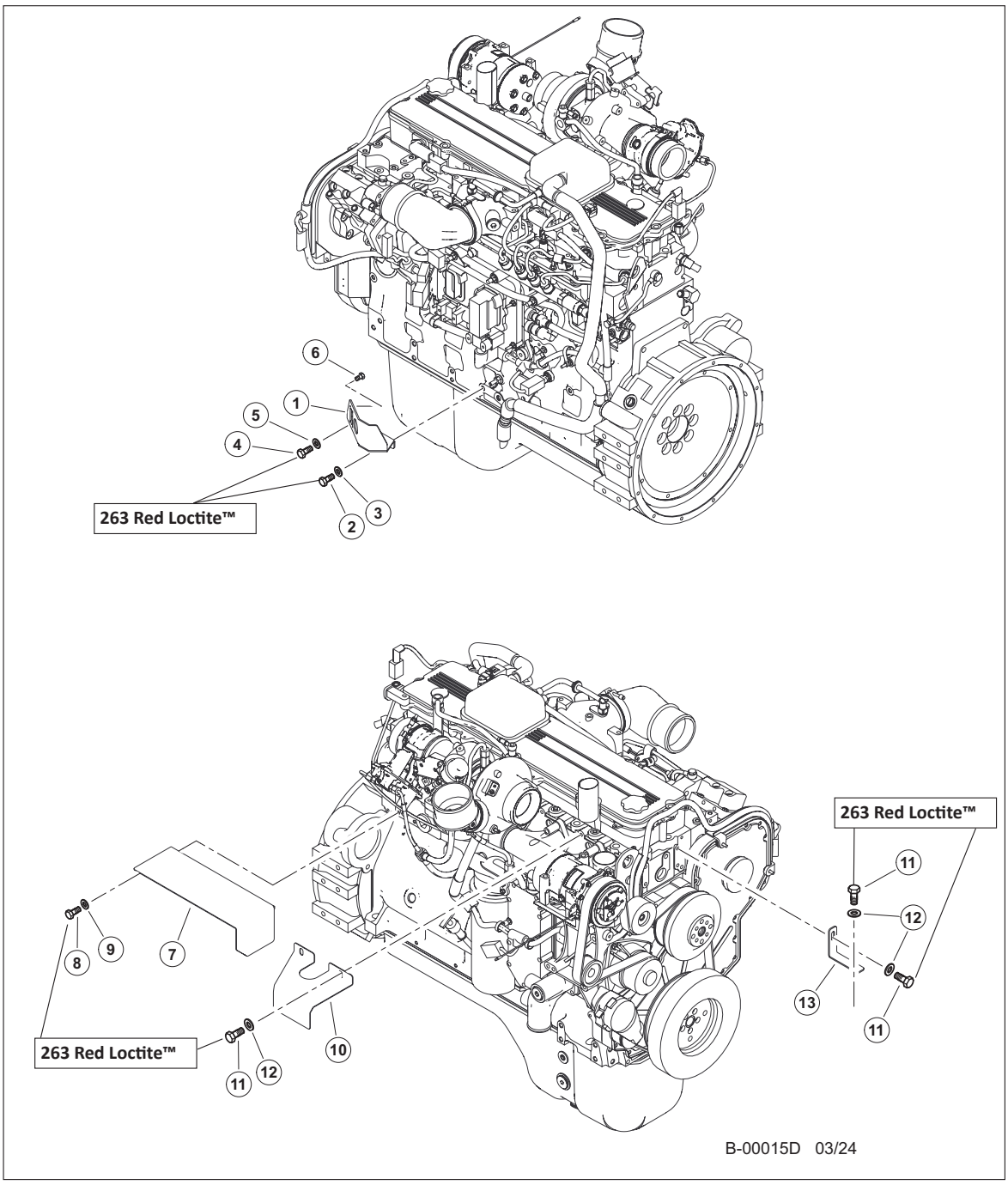

Item	Part #	Description	Qty.
1	60833	PLATE, ECM BH MOUNT	1
2	15556	BOLT - 12MM-1.75P X 20MM **263 RED LOCTITE™**	1
3	18735	WASHER, FLAT - 12MM	1
4	17395	BOLT - 10MM-1.5P X 20MM **263 RED LOCTITE™**	1
5	15528	WASHER, SAE FLAT - .375" OR 3/8"	1
6	10374	#10 SELF TAPPING SCREW	2
7	46199	SHIELD, STARTER - CUMMINS	1
8	25059	BOLT - 8MM-1.25P X 20MM **263 RED LOCTITE™**	2
9	15559	WASHER, SAE FLAT - .3125"	2
10	60825	PANEL, HEAT SHIELD - STAGE V	1
11	17395	BOLT - 10MM-1.5P X 20MM **263 RED LOCTITE™**	4
12	15528	WASHER, SAE FLAT - .375" OR 3/8"	4
13	693360	WELDMENT, SUPPORT, ENGINE SHROUD	1

B100-00130 - ELECTRICAL LOAD CENTER

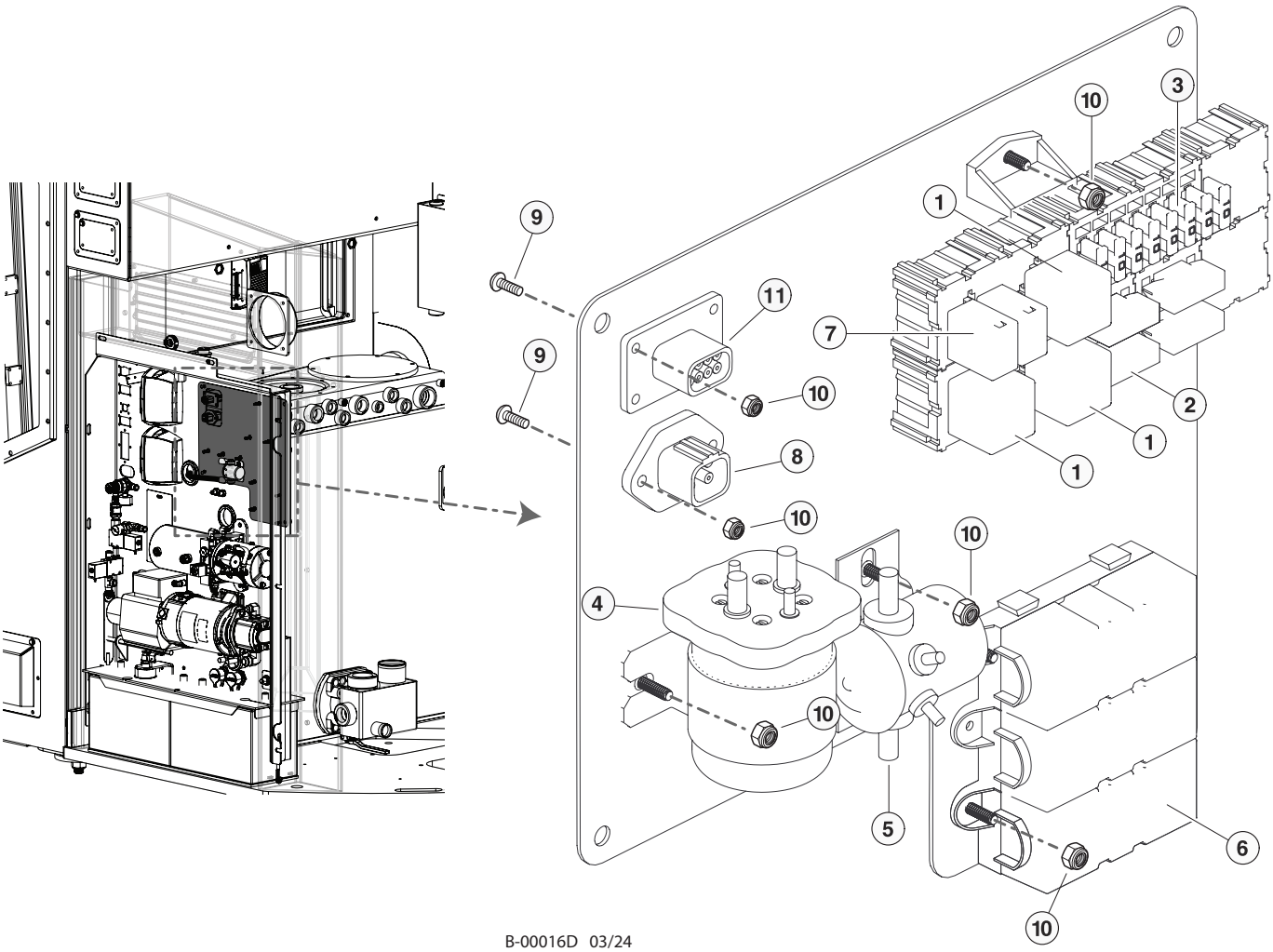

B-00016D 03/24

Item	Part #	Description	Qty.
	46695	LOAD CENTER - ENG COMP MD4 C-SERIES	
1	51755	RELAY, 70 AMP - LIGHTS/FILL PUMP/ACCESOR	3
2	21892	RELAY, 70 AMP - LIGHTS/FILL PUMP/ACCESOR	2
	21893	FUSE, MAXI - 50 AMP (SPADE STYLE)	2
3	24512	FUSE, ATO - 10 AMP (SPADE STYLE)	4
	51754	FUSE, ATO - 20 AMP (SPADE STYLE)	1
	50401	FUSE, ATO - 30 AMP (SPADE STYLE)	1
4	25117	RELAY, START SIGNAL 24-V (WHITE/ROGERS)	1
5	25199	RELAY, START/GRID 24-V (COLE HERSEE)	1
6	23619	FUSE, 100 AMP (MEGA)	3
7	53645	RELAY, ZETTLER AZ988-1C-24DE-C1 (LATCH)	2
	21890	FUSE, MINI - 5 AMP (SPADE STYLE)	1
	21887	FUSE, MINI - 15 AMP (SPADE STYLE)	1
8	DTP04-4P-L012	4 PIN RECEPTACLE	1
9	81465	BUTTON HEAD CAP SCREW STEEL #10-24 X 3/4”	4
10	322	LOCKNUT WITH NYLON INSERT GRADE A #10-24	16
11	DTP04-08P-L012	8 PIN RECEPTACLE	1

B100-00140 - ELECTRICIAL CENTER

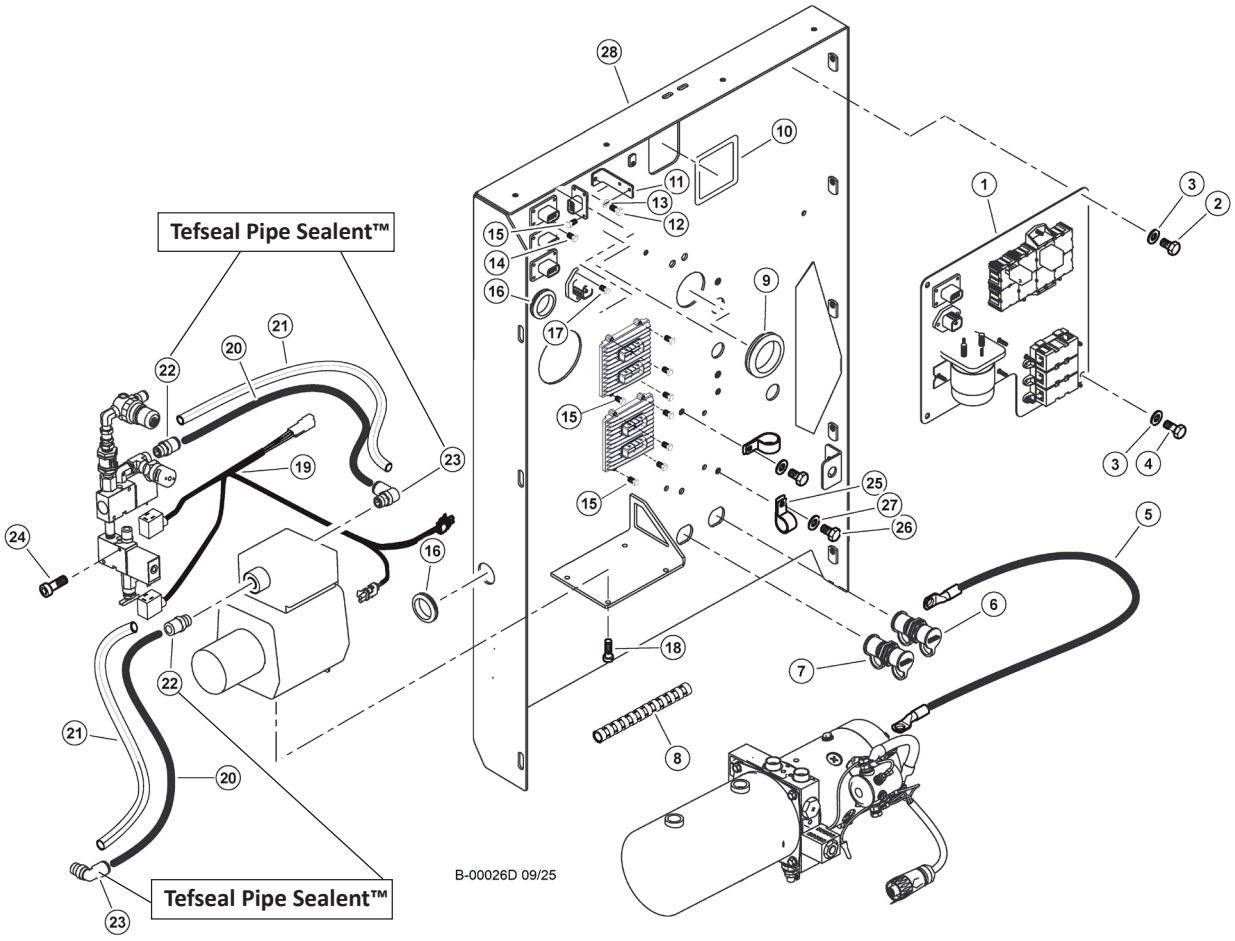

B100-00140 - ELECTRICIAL CENTER

Item	Part #	Description	Qty.
1	46695	LOAD CENTER - ENG COMP MD4 C-SERIES	1
2	23264	BOLT - .25” X .5”	3
3	10757	WASHER, SAE FLAT - .25”	4
4	18309	BOLT - .25” X 1.25”	1
5	55366	CABLE, BATTERY - NEGATIVE - 24”	1
6	54642	STUD, THRU BATTERY CABLE 1/2” NEGATIVE	1
7	54343	STUD, THRU BATTERY CABLE POSITIVE	1
8	27846	WRAP, SPIRAL HOSE - 3/8”I.D. .052” WALL	AR
9	53088	GROMMET, PROTECTOR	1
10	55012	WEATHERSTRIPPING, RUBBER-DOOR SEAL THIN	1’
11	46407	BRACKET, PLUG MOUNT	1
12	23264	BOLT - .25” X .5”	1
13	10757	WASHER, SAE FLAT - .25”	1
14	53685	SCREW - #8-32 X .5” (SELF TAPPING)	12
15	692850	SCREW, SELF TAP #10-24 X 1.0”	10
16	57899	GROMMET, RUBBER - 1” ID X 1.75” OD	2
17	80498	CAP SCREW GRADE 12.9 M5-0.8 X 12MM	2
18	81491	BUTTON HEAD CAP SCREW STEEL #10-32 X 1/2”	4
19	55193	HARNESS, VAC VENT FILL	1
20	51738	HOSE, VACUUM PUMP 3/8” PUSH ON	AR
21	17449	LOOM, SPLIT - .5” (BULK)	AR
22	52506	CONNECTOR, STR - PUSH HOSE - 1/4” VACUUM **TEFSEAL PIPE SEALANT™**	2
23	51739	CONNECTOR, ELBOW-PUSH ON (VACUUM) (1/4”) **TEFSEAL PIPE SEALANT™**	2
24	94290	CAP SCREW ALLOY STEEL #8-32 X 1-1/4”	2
25	17007	CABLE CLAMP	2
26	15605	BOLT - .3125” X .75”	2
27	15559	WASHER, SAE FLAT - .3125”	2
28	607970	PANEL, ELECTRICAL CENTER	1

B100-00150 - HYDRAULIC FITTING KIT - ELECTRICAL PANEL

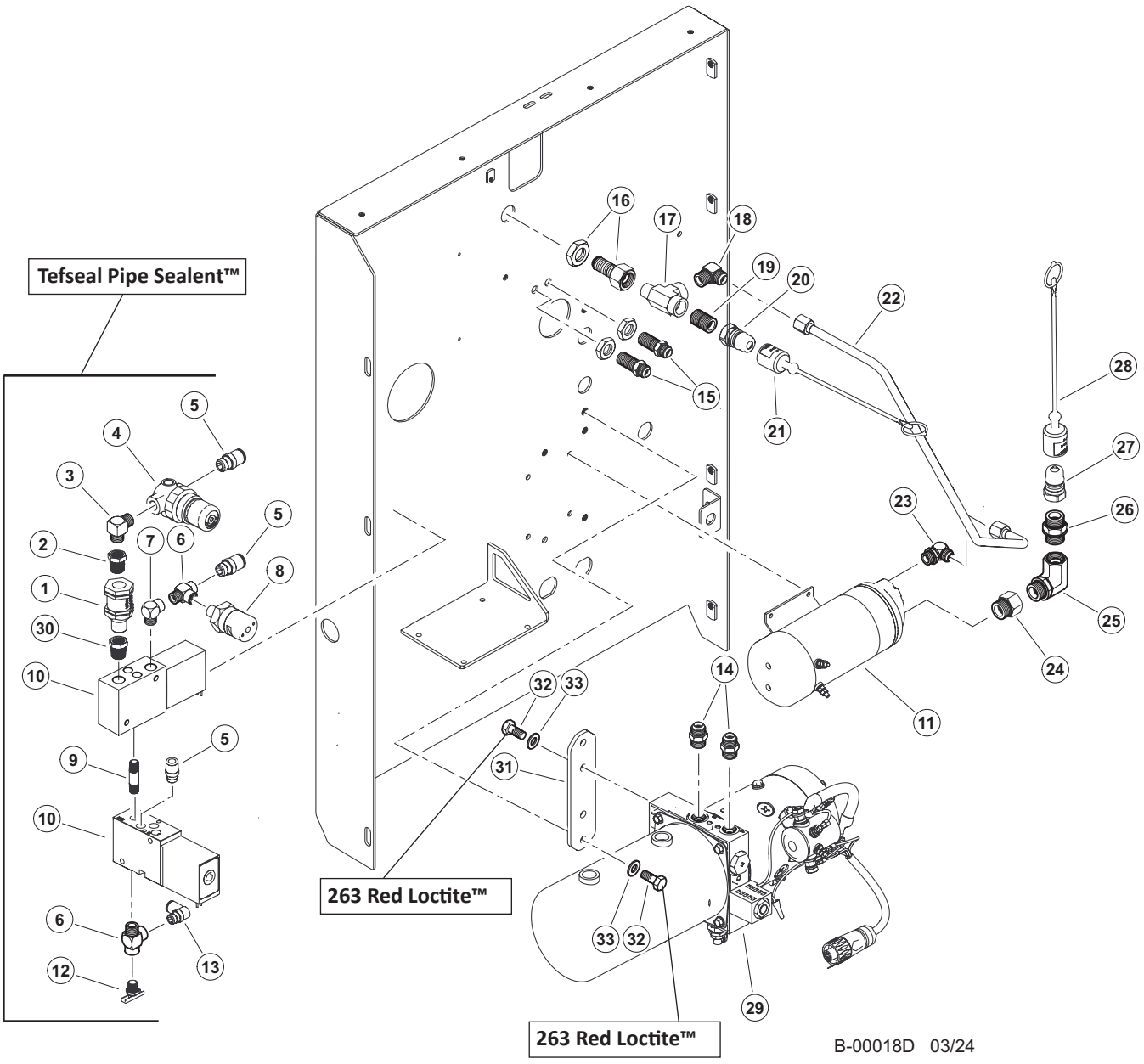

B100-00150 - HYDRAULIC FITTING KIT - ELECTRICAL PANEL

Item	Part #	Description	Qty.
	57488	KIT, FITTING - ELECTRICAL PANEL	
1	*15652	VALVE, CHECK - HYDRAULIC/FUEL **TEFSEAL PIPE SEALANT™**	1
2	*11318	BUSHING, REDUCER - 5406-6-4 **TEFSEAL PIPE SEALANT™**	1
3	*52741	ELBOW, MALE PIPE - 1/4 CR-S **TEFSEAL PIPE SEALANT™**	1
4	15649	REGULATOR, TURBO BOOST	1
5	52506	CONNECTOR, STR - PUSH HOSE - 1/4” VACUUM **TEFSEAL PIPE SEALANT™**	3
6	*10393	TEE - 1/4 MRO **TEFSEAL PIPE SEALANT™**	2
7	*21147	ELBOW, 90 STREET .25” NPT - BRASS **TEFSEAL PIPE SEALANT™**	1
8	51737	SWITCH, PRESSURE - VACUUM PUMP **TEFSEAL PIPE SEALANT™**	1
9	16314	NIPPLE, PIPE - .25” X 2” **TEFSEAL PIPE SEALANT™**	1
10	51616	VALVE, 3-WAY VACUUM PUMP	2
11	55691	PUMP, HYDRAULIC OIL FILL - HYDAC (24 VOLT)	1
12	53108	PETCOCK, HYD TANK VENT/RAD DRAIN 1/4 **TEFSEAL PIPE SEALANT™**	1
13	51739	CONNECTOR, ELBOW -PUSH ON (VACUUM) (1/4”) **TEFSEAL PIPE SEALANT™**	1
14	*54809	CONNECTOR, STR - 4 JIC x -6 ORB	2
15	*54808	90° BULKHEAD UNION ELBOW -4 JIC WITH L/N	2
16	54799	BULKHEAD CONN -8JIC X-8 ORB	1
17	*51879	TEE, RUN - .5” (1/2 MR0-S)	1
18	*55697	FITTING, ELBOW - MALE - 8-8 CTX-S	1
19	16126	NIPPLE, CLOSE - 1/2”	1
20	*17307M	QUICK DISCONNECT - .5” (MALE)	1
21	*17323F	COVER, DUST - QUICK DISCONNECT (FEMALE)	1
22	57664	TUBELINE, FILL PUMP - ALL MACHINES	1
23	*55712	FITTING, ELBOW - MALE 8-8C4OMXS	1
24	*55711	FITTING, 3/4 - 12F40HG55	1
25	*22383	ELBOW, 90 - 12 AOEG5-S	1
26	54998	FITTING, FILL PUMP	1
27	*55620	NIPPLE, 60 SERIES - H6-63-T12	1
28	*55617	CAP, QUICK CONNECT - RUBBER (RED)	1
29	51577	PUMP, POWER UNIT - GULLWING W/PEND	1
30	*52145	ADAPTER, EXPANDER - 3/8 X 1/4 FG-S **TEFSEAL PIPE SEALANT™**	1
31	47542	PLATE, GULLWING PUMP	1
32	15542	BOLT - .375” X .75” **263 RED LOCTITE™**	4
33	15528	WASHER, SAE FLAT - .375”	4

(* EQUALS ITEMS INCLUDED IN KIT #54788)

B100-00160 - ELECTRICAL PANEL INSTALLATION

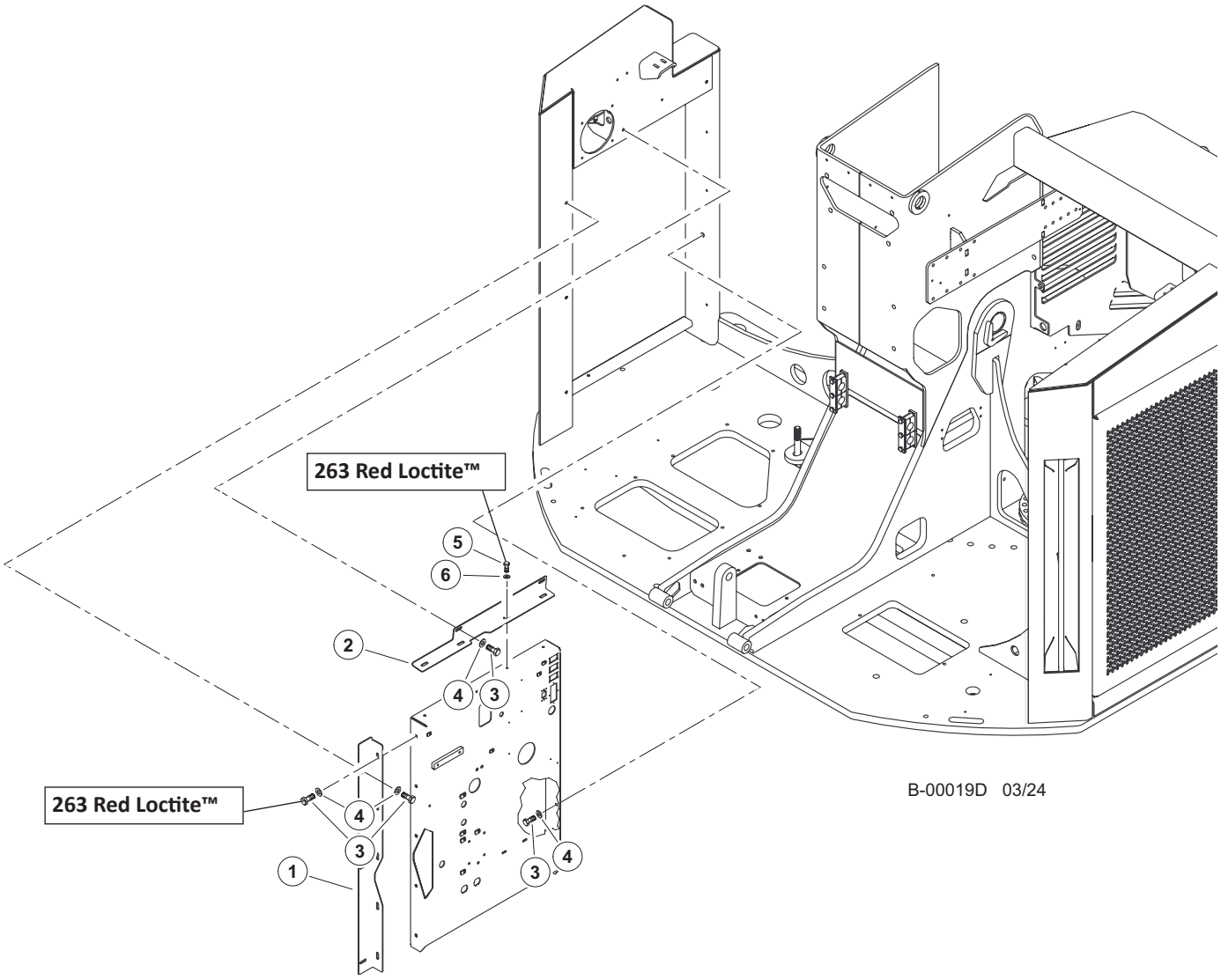

Item	Part #	Description	Qty.
1	47268	ANGLE, MOUNTING - ELECTRICAL PANEL	1
2	47870	ANGLE, MOUNTING - ELECTRICAL PANEL	1
3	15542	BOLT - .375" X .75" **263 RED LOCTITE™**	11
4	15528	WASHER, SAE FLAT - .375"	13
5	15604	BOLT - .25" X .75" **263 RED LOCTITE™**	4
6	10800	WASHER, FLAT - .25"	4

B100-00170 - 120V ENGINE BLOCK HEATER

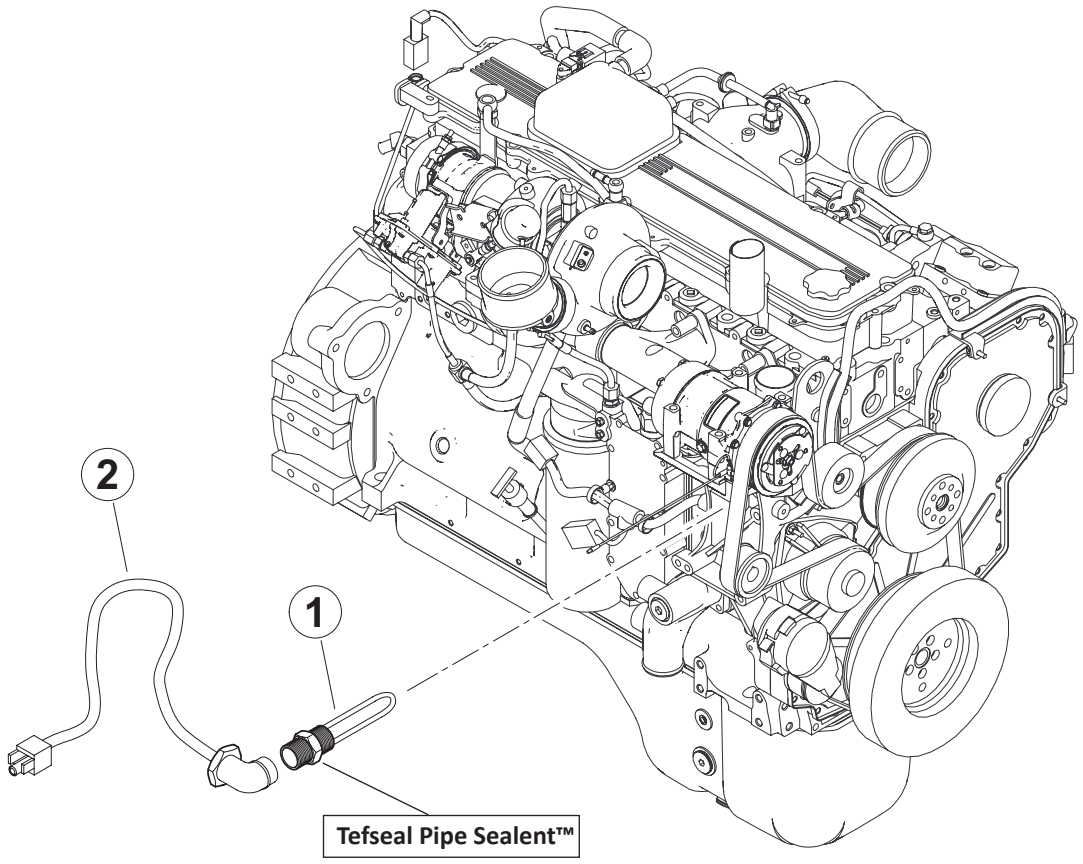

B-00020D 03/24

Item	Part #	Description	Qty.
1	24377	HEATER, ENGINE BLOCK (CUMMINS QSC-1000W) **TEFSEAL PIPE SEALANT™**	1
2	58344	CORD, ENGINE HEATER	1

COOLING SYSTEM - (C)

C100-00000 - COOLER FAN AND MOTOR INSTALLATION

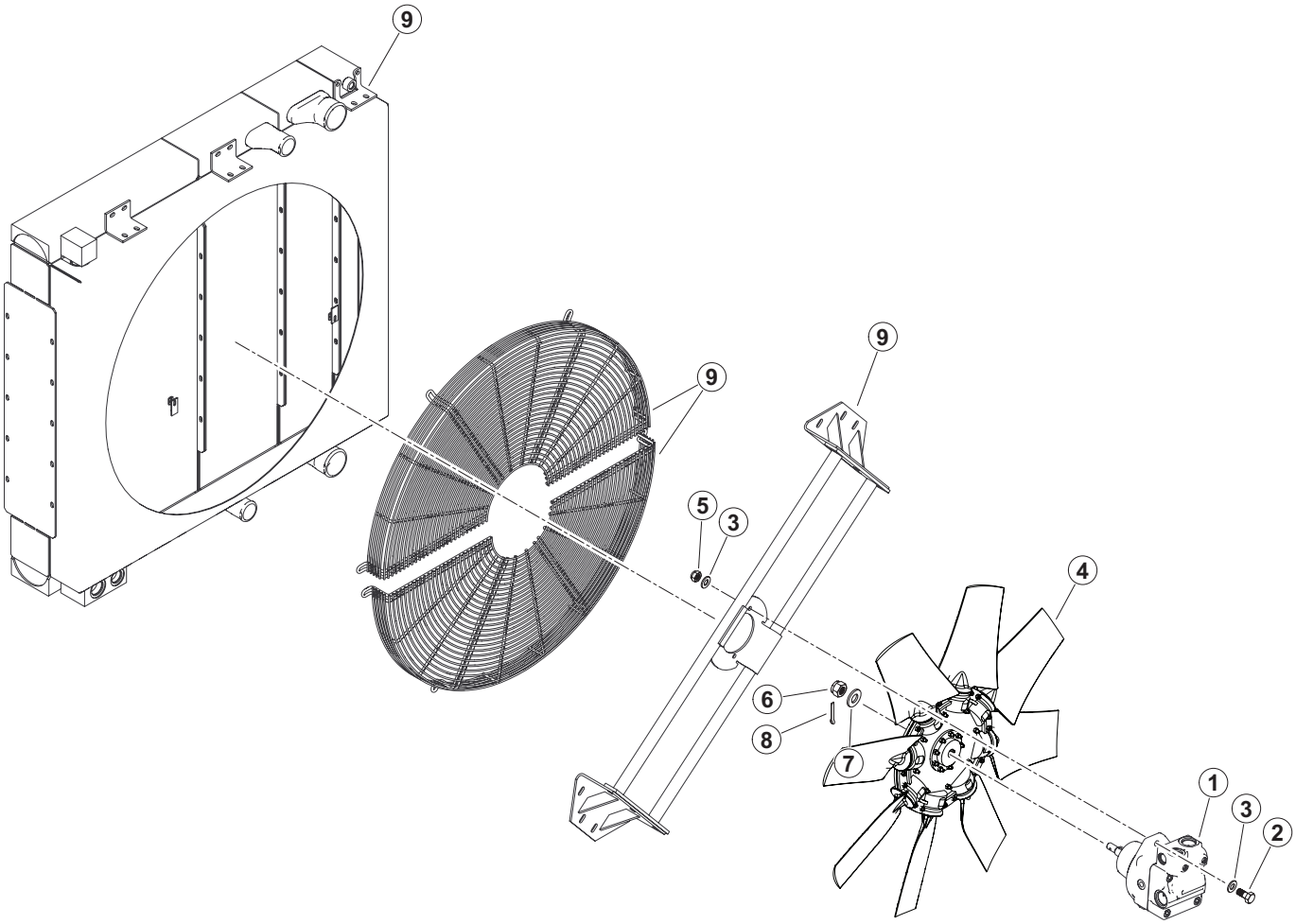

C-00001D 03/24

Item	Part #	Description	Qty.
1	55215	MOTOR, FAN DRIVE - RADIATOR W/FAN CONTROL	1
2	18933	BOLT - .5” X 1.75”	2
3	15534	WASHER, SAE FLAT - .5”	4
4	58129	FAN, RADIATOR - 42”	1
5	10815	NUT, LOCK - .5”	2
6	53189	NUT, CASTLE - M16-1.5	1
7	10771	WASHER, SAE FLAT - .625”	1
8	1029	COTTER PIN - 1/8” X 1.00”	1
9	58238	RADIATOR / OIL COOLER - STAGE V # 24 PORT	1

C100-00001 - COOLING FAN MOTOR COMPONENTS

NOTE: APPLY GREASE TO O-RINGS

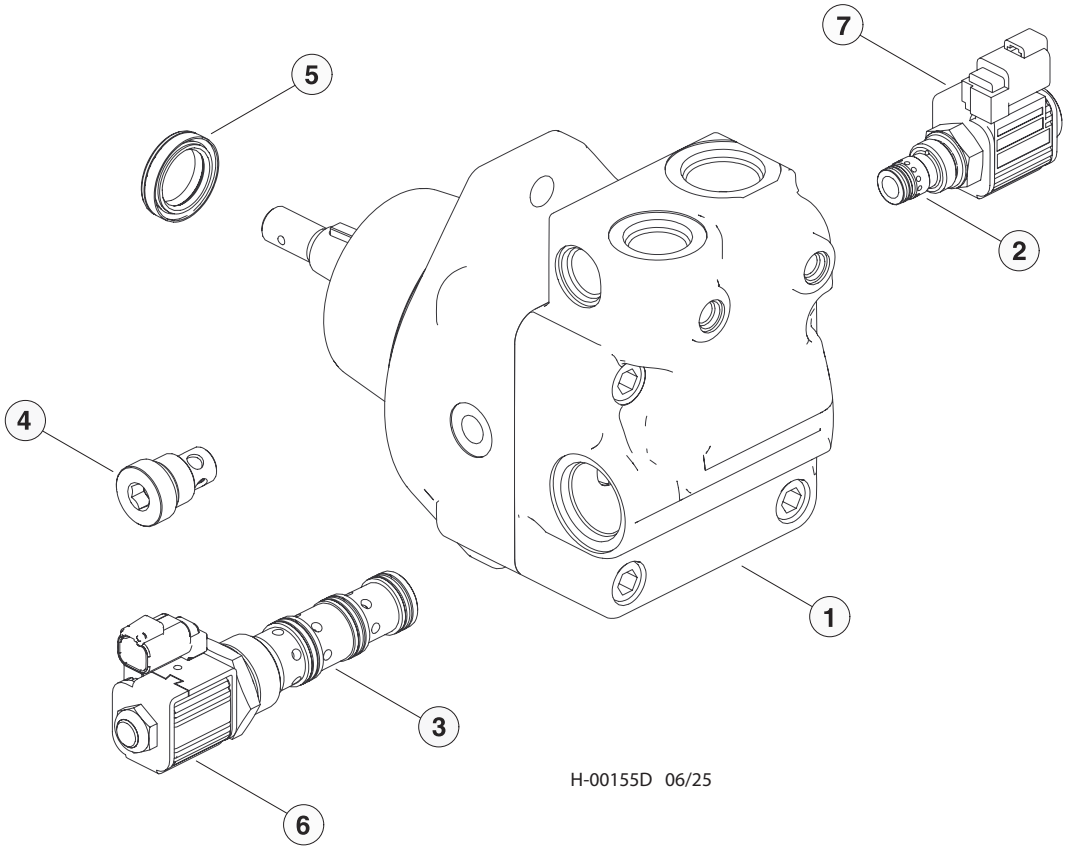

Item	Part #	Description	Qty.
1	55215	MOTOR, FAN DRIVE - RADIATOR W/FAN CONTR0L	1
2	57603	VALVE, PROPORT. FAN MOTOR (SMALL)	1
3	57604	VALVE, REVERSING FAN MOTOR (LARGE)	1
4	58171	ASSEMBLY, CHECK VALVE	1
5	57688	SHAFT SEAL	1
6	58627	COIL	1
7	CCP024H	COIL	1

C100-00002 - COOLER BREAKDOWN

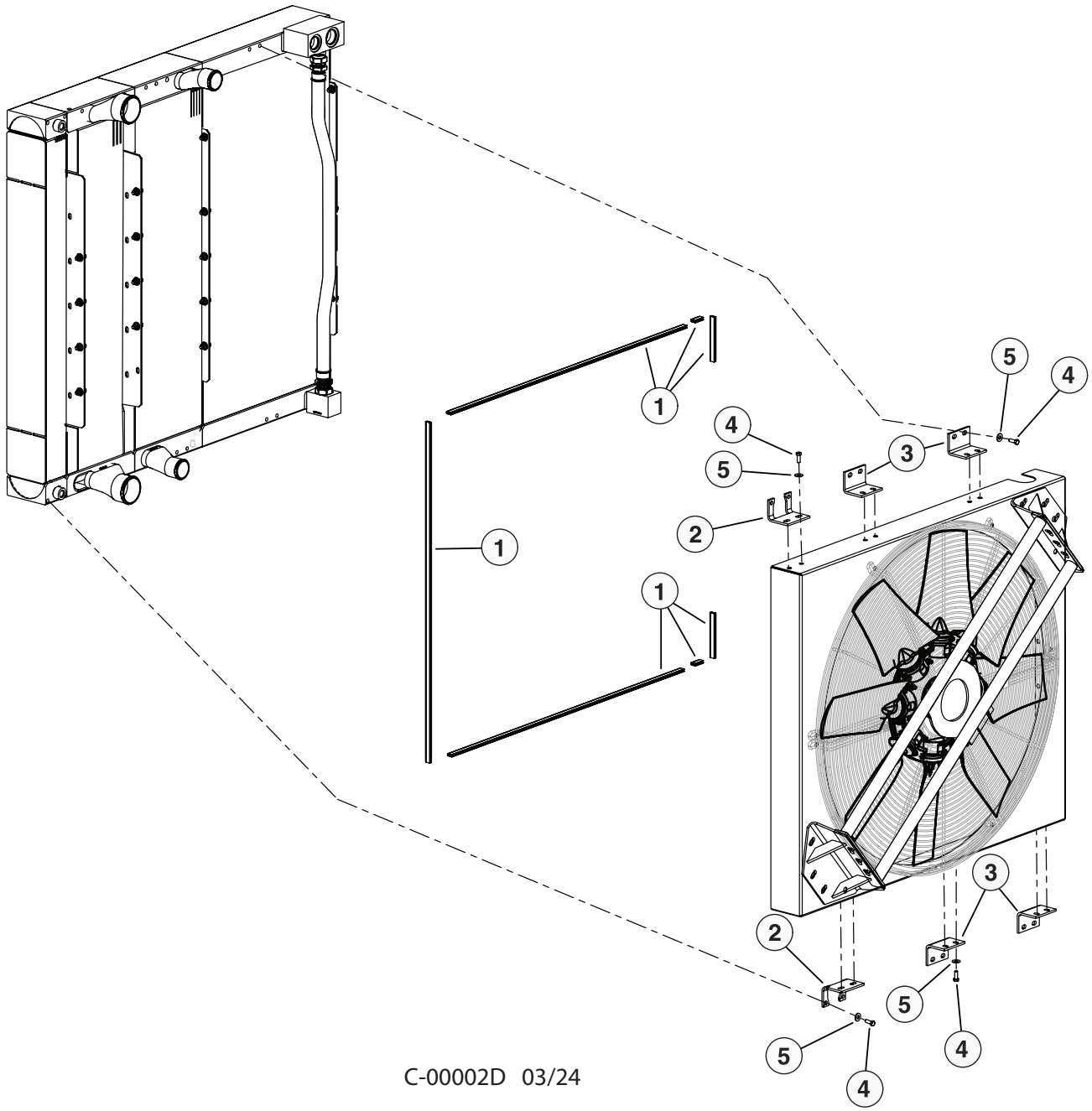

C-00002D 03/24

Item	Part #	Description	Qty.
1	8065.059.0000-3918.13	WEATHERSTRIP	1
2	3918.013.0009-032519	BRACKET	2
3	3562.074.0001-032519	BRACKET	4
4	8050.058.0000-032519	BOLT	24
5	603784-032519	WASHER	24

C100-00003 - COOLER FAN SHROUD

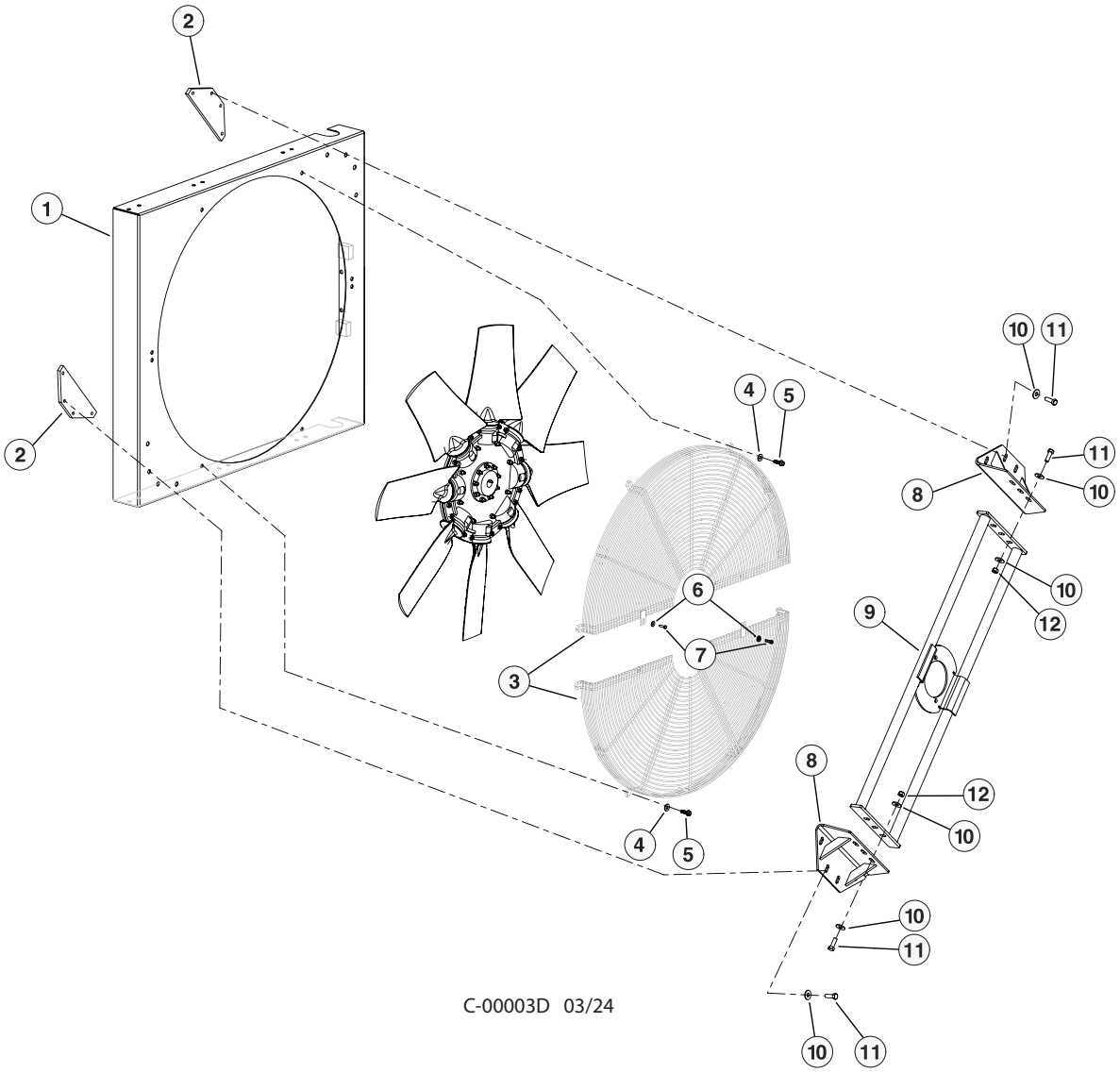

Item	Part #	Description	Qty.
1	3918.013.4010	FAN SHROUD	1
2	3918.013.4012-032519	BRACKET	2
3	3703.293.4030-032519	GUARD	1
4	603784-032519	WASHER	8
5	8050.059.0000-032519	BOLT	8
6	8054.019.0000-032519	WASHER	2
7	600050-032519	BOLT	2
8	3918.013.5002-032519	BRACKET	2
9	8049.062.0000-032519	FAN MOTOR MOUNT	1
10	601827-032519	WASHER	20
11	8050.066.0000-032519	BOLT	14
12	8049.062.0000-032519	NUT	6

C100-00004 - RADIATOR/COOLER COMPONENTS

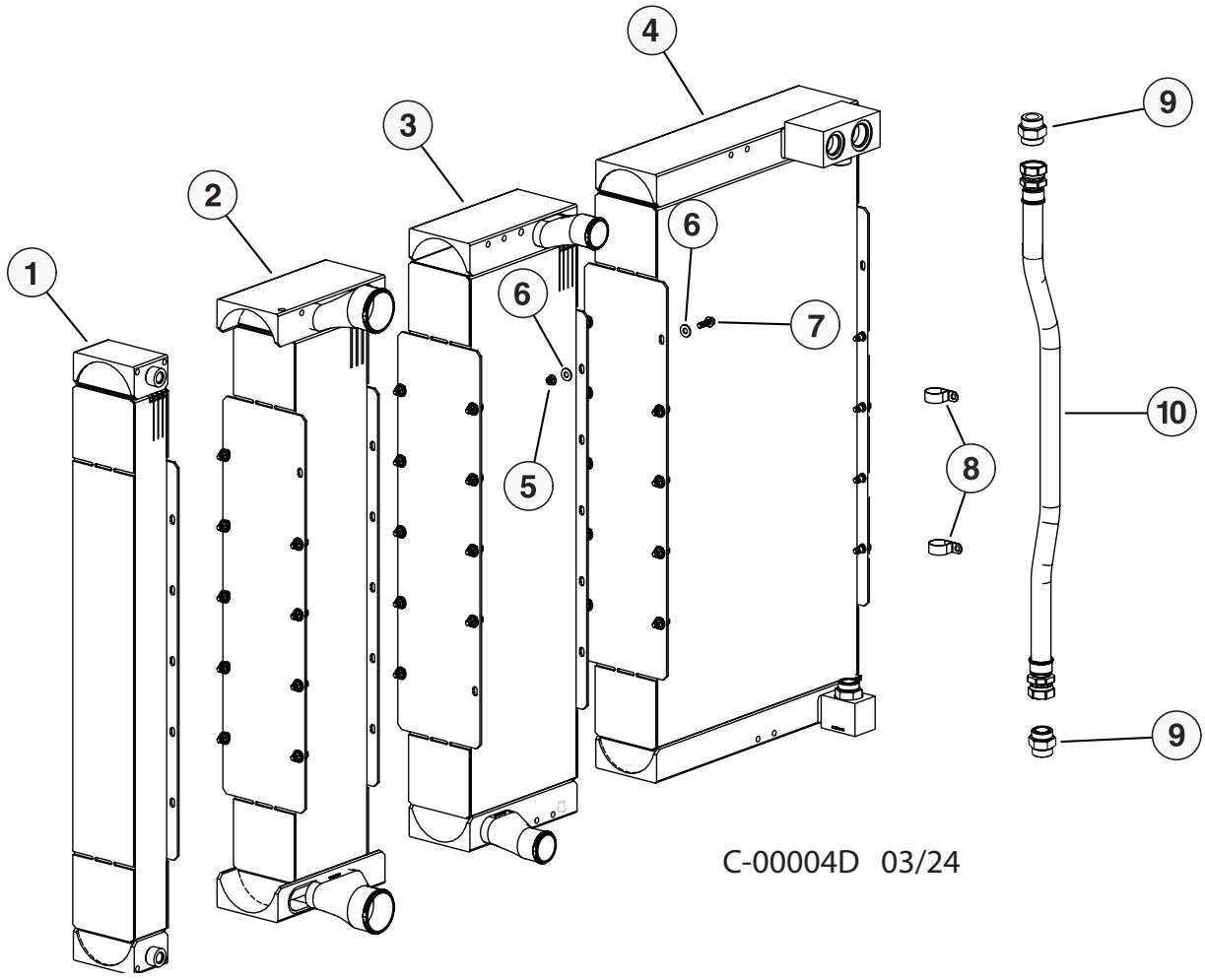

Item	Part #	Description	Qty.
1	3918.013.1700-032519	AC CONDENSER COOLER	1
2	3918.013.3000-032519	CAC COOLER	1
3	3918.013.2000-032519	RADIATOR COOLER	1
4	58168	CORE, OIL COOLER - STAGE V UPDATED	1
5	600862AX-032519	NUT	15
6	603784-032519	WASHER	30
7	8050.059.0000-032519	BOLT	15
8	8055.008.0000-032519	CLAMP	2
9	22448	CONNECTOR, STR - 848-TTO-24X24	2
10	3918.013.0010-032519	HOSE ASSEMBLY - 187TC30.5-24-24OS-24OS	1

C100-00010 - RADIATOR SURGE TANK INSTALLATION

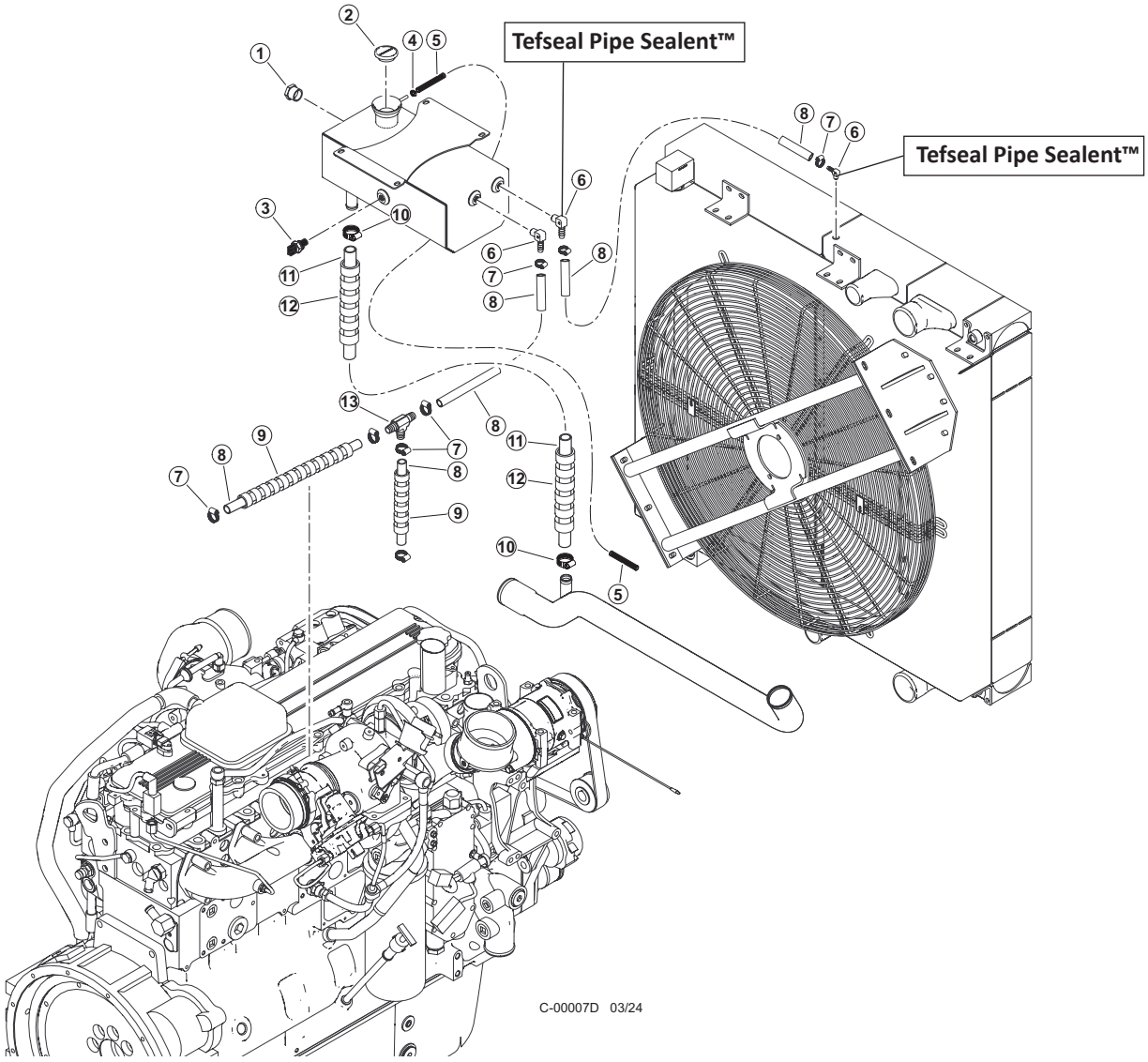

Item	Part #	Description	Qty.
1	24308	SIGHT GLASS - HYDRAULIC TANK/TRIPLE BOX	1
2	57893	CAP, RADIATOR 15 # D-SERIES COOLER	1
3	58117	SENSOR, LOW COOLANT - STAGE 5	1
4	16202	CLAMP, HOSE - WORM STYLE - .3125”	1
5	16238	HOSE, FUEL LINE (BULK ROLL) - .3125”	86”
6	52586	ELBOW, 90 MALE HOSE BARB 6-4 **TEFSEAL PIPE SEALANT™**	3
7	16202	CLAMP, HOSE - WORM STYLE - 3/8”	6
8	55411	HOSE, COOLENT - 3/8”	AR
9	27846	WRAP, SPIRAL HOSE - 3/8”I.D. .052” WALL	AR
10	16202	CLAMP, HOSE - WORM STYLE - .625”	2
11	(57941 - KIT)	HOSE, HEATER, 803195716-0-0-SW **(RADIATOR BURP TANK)**	1
12	19677	PROTECTOR, HOSE - SPRIAL (1.25”)(BULK)	AR
13	57902	TEE, HOSE BARB - 3/8”	1

C100-00020 - COOLING UNIT RELATED PARTS

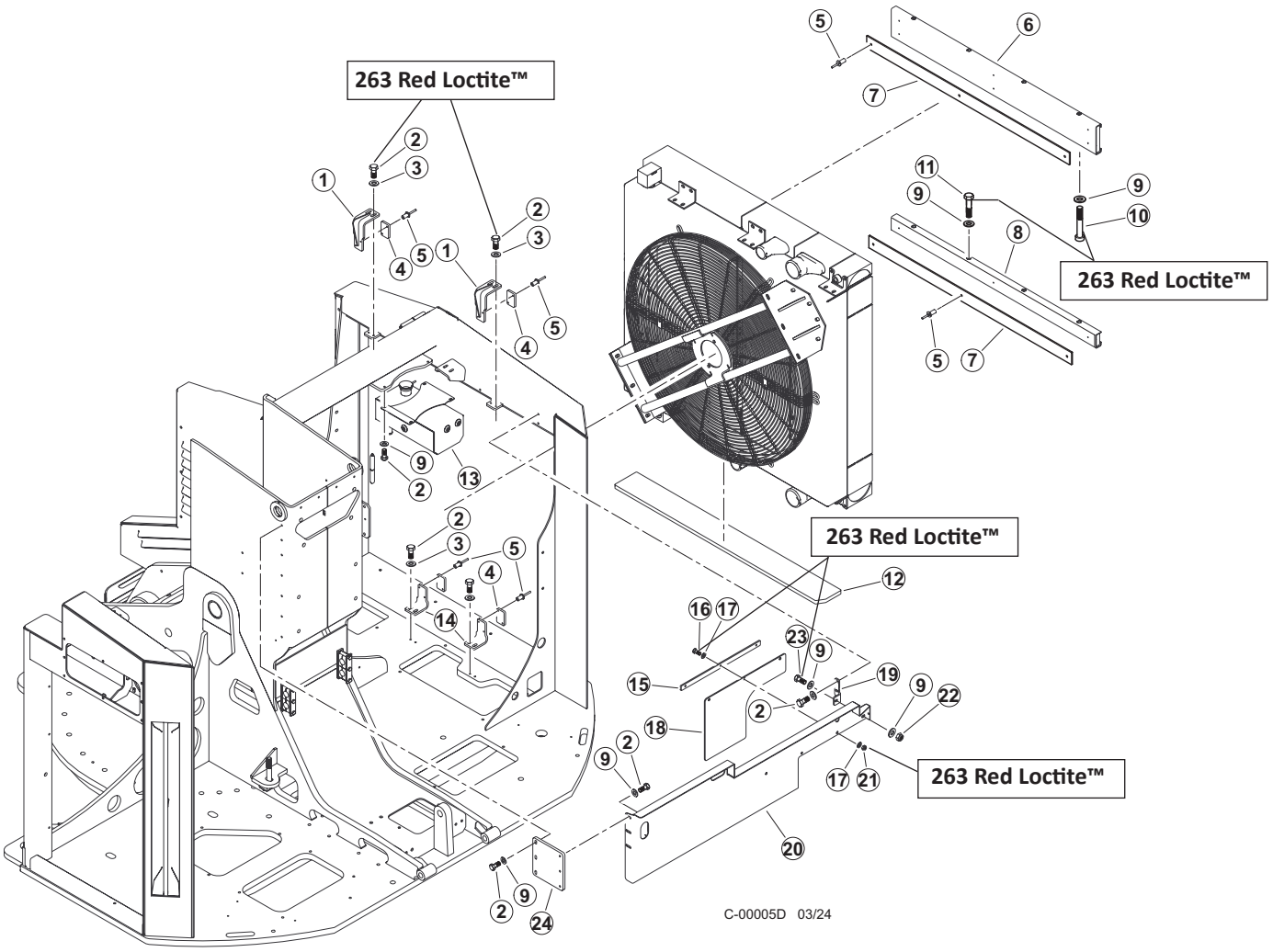

Item	Part #	Description	Qty.
1	60689	WELDMENT, COOLER TOP CLAMP HOLD DOWN	2
2	10402	BOLT - .375" X 1.25" **263 RED LOCTITE™**	20
3	10802	WASHER, FLAT - .375"	8
4	60106	RUBBER, COOLER MOUNTING - D-SERIES	4
5	59104	RIVET, BLIND, 3/16" DIA, DOME HD	14
6	60623	WELDMENT, COOLER SILL - TOP	1
7	61111	RUBBER, COOLER FRONT - D SERIES	2
8	60627	WELDMENT, SILL COOLER - BOTTOM	1
9	58217	BOLT, ALLEN 3/8-16 X 7 COOLER SILL D TOP	4
10	15528	WASHER, SAE FLAT - .375" **263 RED LOCTITE™**	22
11	10713	BOLT - .375" X 3.5" **263 RED LOCTITE™**	4
12	61247	RUBBER, COOLER FRONT, 3/4" THICK	1
13	60665	TANK, SURGE	1
14	60149	PLATE, COOLER CLAMP HOLD DOWN	2
15	60703	BAR, MOUNT - ENGINE BARRIER	1
16	18309	BOLT - .25" X 1.25" **263 RED LOCTITE™**	3
17	10800	WASHER, FLAT - .25"	6
18	58150	BELTING, SCR SPRAY PROTECTOR	1
19	60685	BRACKET, BARRIER PANEL	1
20	60443	BARRIER, COOLER PANEL	1
21	10811	NUT, LOCK - .25"	3
22	10813	NUT, LOCK - .375"	1
23	10402	BOLT - .375" X 1.25" **263 RED LOCTITE™**	1
24	60508	PLATE, BARRIER PANEL MTG	1

C100-00030 - RADIATOR HOSES AND AIR TUBES

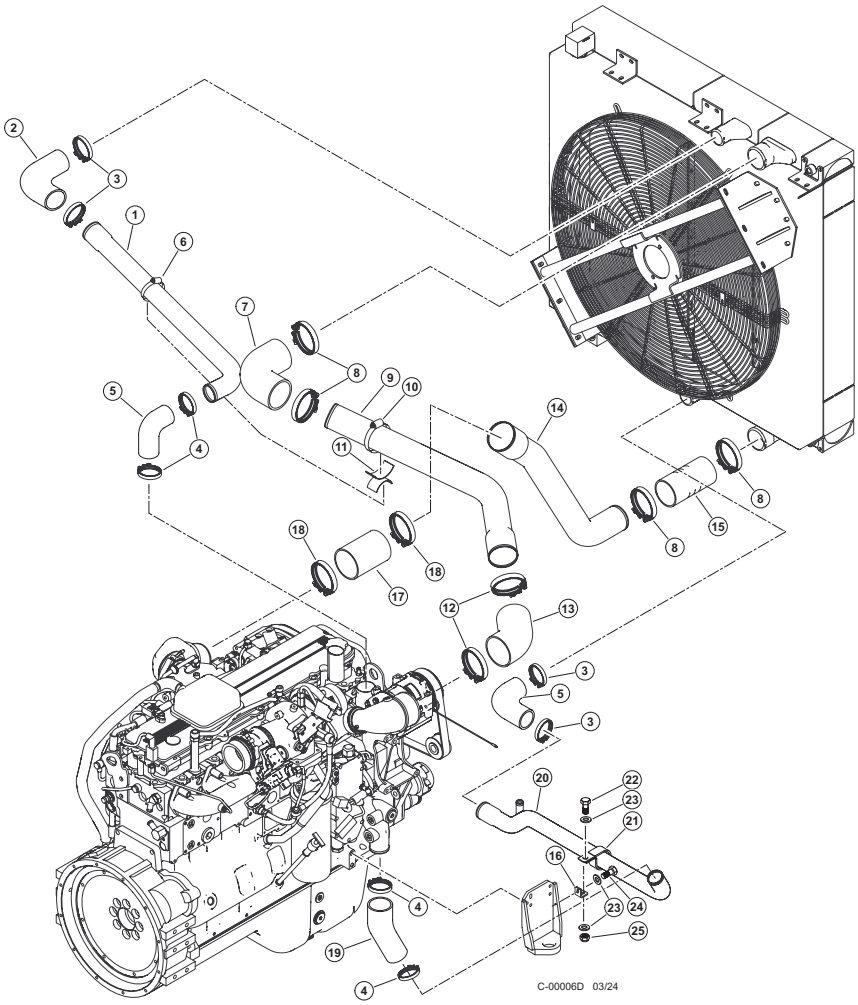

Item	Part #	Description	Qty.
1	48918	TUBE, UPPER RADIATOR	1
2	15617	HOSE, 90 DEGREE RADIATOR - 2 1/4 ID	1
3	18103	CLAMP, CONSTANT TORQUE - #40	4
4	18104	CLAMP, CONSTANT TORQUE - #36	4
5	15617	HOSE, 90 DEGREE RADIATOR - 2 1/4 ID	2
6	54788	CLAMP, STANDOFF - WATER/AIR TUBE	1
7	52753	ELBOW, 90 - 3.5” X 6” SILICONE C-SERIES	1
8	52862	CLAMP, HOSE - CUMMINS HUMP	4
9	60440	TUBE, UPPER CAC TO MANIFOLD	1
10	15597	CLAMP, HOSE - WORM STYLE - 4”	1
11	46844	STANDOFF, AIR TUBE/WATER TUBE	1
12	15697	CLAMP, STRAP BAND - 4.5”	2
13	52729	ELBOW, 48 - 4” BOOT(AIR TO AIR TIER 3 C)	1
14	60436	TUBE, LOWER CAC TO MANIFOLD	1
15	52861	HOSE, HUMP - SILICONE (3 WIRE CUMMINS)	1
16	46421	BRACKET, COOLER LINE SUPPORT	1
17	55646	HOSE, AIR TO AIR - CUMMINS - 4” X 4” STR	1
18	15697	CLAMP, STRAP BAND - 4.5”	2
19	57992	HOSE, RADIATOR - D-SERIES	1
20	61246	TUBE, LOWER RAD D-SERIES W/ TUBE FLARE	1
21	0708830	P-CLIP, CUSHIONED, 2.25” ID	1
22	15576	BOLT - .25” X 1”	1
23	10757	WASHER, SAE FLAT - .25”	3
24	18309	BOLT - .25” X 1.25”	1
25	10811	NUT, LOCK - .25”	1

FUEL SYSTEM AND RELATED PARTS - (D)

D100-0000 - FUEL TANK COMPONENTS - LEVELING

NOTE: APPLY GREASE TO O-RINGS

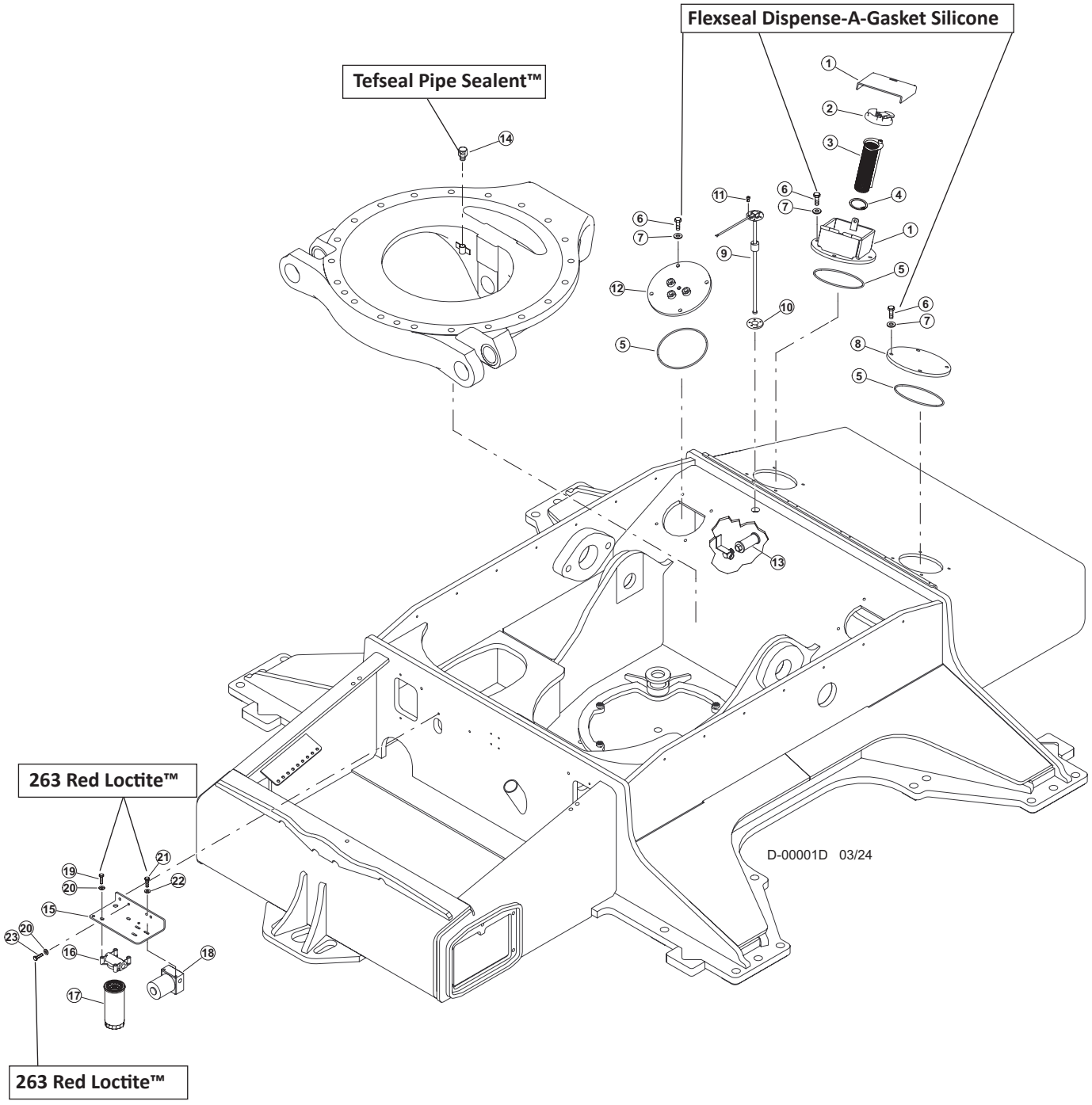

D100-00000 - FUEL TANK COMPONENTS - LEVELING

Item	Part #	Description	Qty.
1	47605	COVER, LOCKING FUEL TANK	1
2	16585	CAP, FUEL	1
3	17114	STRAINER, FUEL SYSTEM	1
4	17115	RING, SNAP - FUEL STRAINER RETAINER	1
5	15600	O-RING - 8” DIA. -369	4
6	50100	BOLT - .5” X 1.25” **FLEXSEAL DISPENSE-A-GASKET SILICONE**	16
7	15534	WASHER, SAE FLAT - .5”	16
8	12250	COVER, ACCESS FUEL TANK	4
9	57220	SENDER, FUEL LEVEL W/FLOAT (TL TRACK)	1
10	SEE DESCRIPTION	GASKET, FUEL SENDER **(CALL)**	1
11	22862	SCREW, MACHINE - #10-24 X .5” (BUTTON)	4
12	53203	COVER, ACCESS FUEL TANK W/FITTINGS	1
13	17271	FILTER, SCREEN - FUEL SYSTEM	1
14	54170	VENT, FUEL TANK - TRACK **TEFSEAL PIPE SEALANT™**	1
15	53197	MOUNT, FUEL COMPONENTS - LEV T/M	1
16	16574	MOUNT, FILTER HEAD ASSEMBLY	1
17	51751	FILTER, FUEL - SPIN-ON FUEL	1
18	57784	PUMP, FUEL - AIR DOG	1
19	11707	BOLT - .375” X 1” **263 RED LOCTITE™**	2
20	10802	WASHER, FLAT - .375”	4
21	15605	BOLT - .3125” X .75” **263 RED LOCTITE™**	2
22	10801	WASHER, FLAT - .3125”	2
23	15542	BOLT - .375” X .75” **263 RED LOCTITE™**	2

D100-00010 - FUEL HOSE KIT - UPPER

NOTE: HYDRAULIC FITTINGS GET 545 LOCTITE™

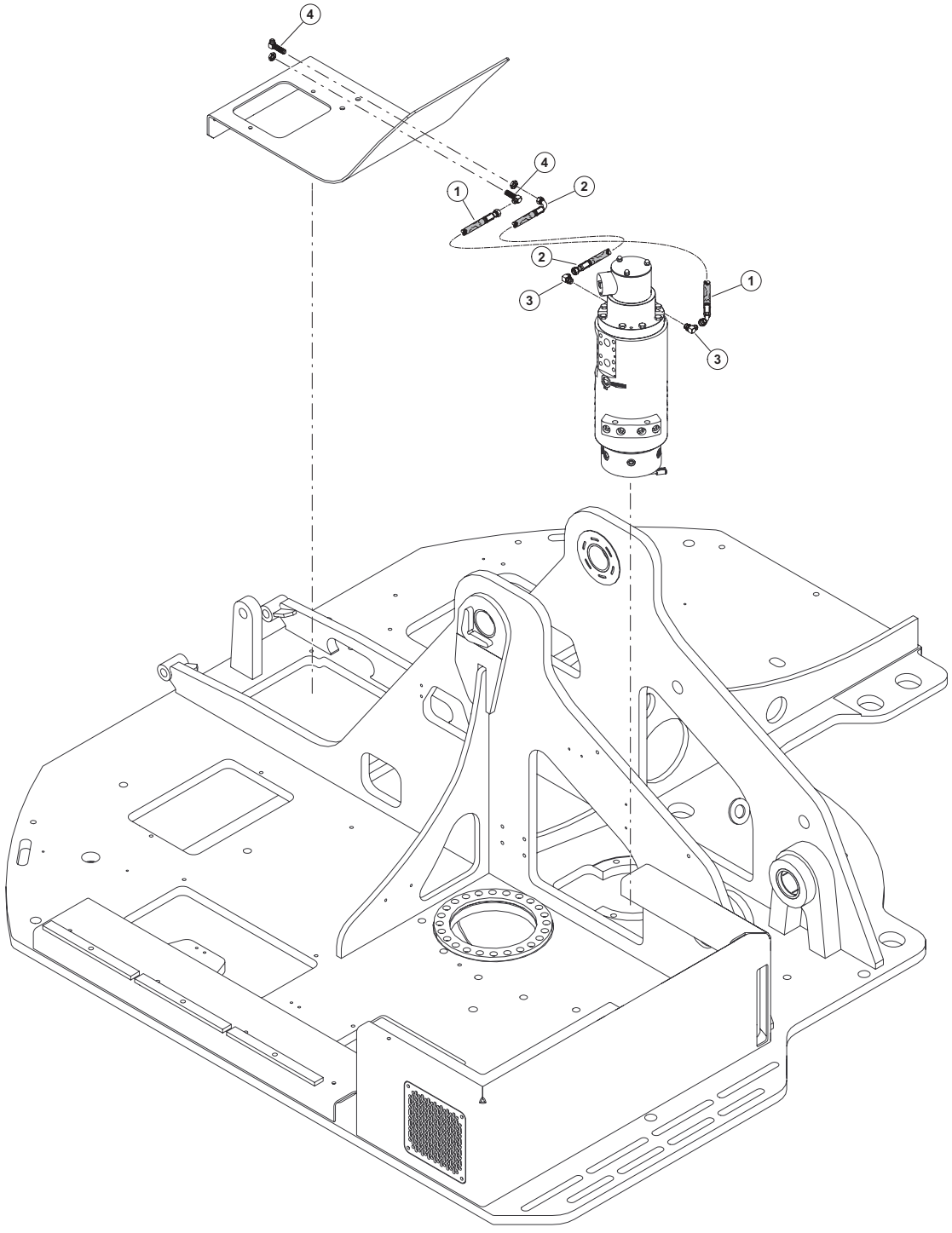

D-00002D 03/24

D100-00010 - FUEL HOSE KIT - UPPER

Item	Part #	Description	Qty.
1	65797 - (65792 - KIT)	HOSE, HYD, 221FR81 06-06FJ-06FJ4-W **- (FUEL SUPPLY TO RM)**	1
2	65798 - (65792 - KIT)	HOSE, HYD, 221FR81 06-06FJ-06F9-W **- (FUEL RETURN TO RM)**	1
3	15480	ELBOW, 90 - 6801-6	2
4	55347	FITTING, ELBOW - BULKHEAD 6 WETX-WLN-S	2

D100-00020 - FUEL TANK COMPONENTS - NON-LEVELING

NOTE: APPLY GREASE TO O-RINGS

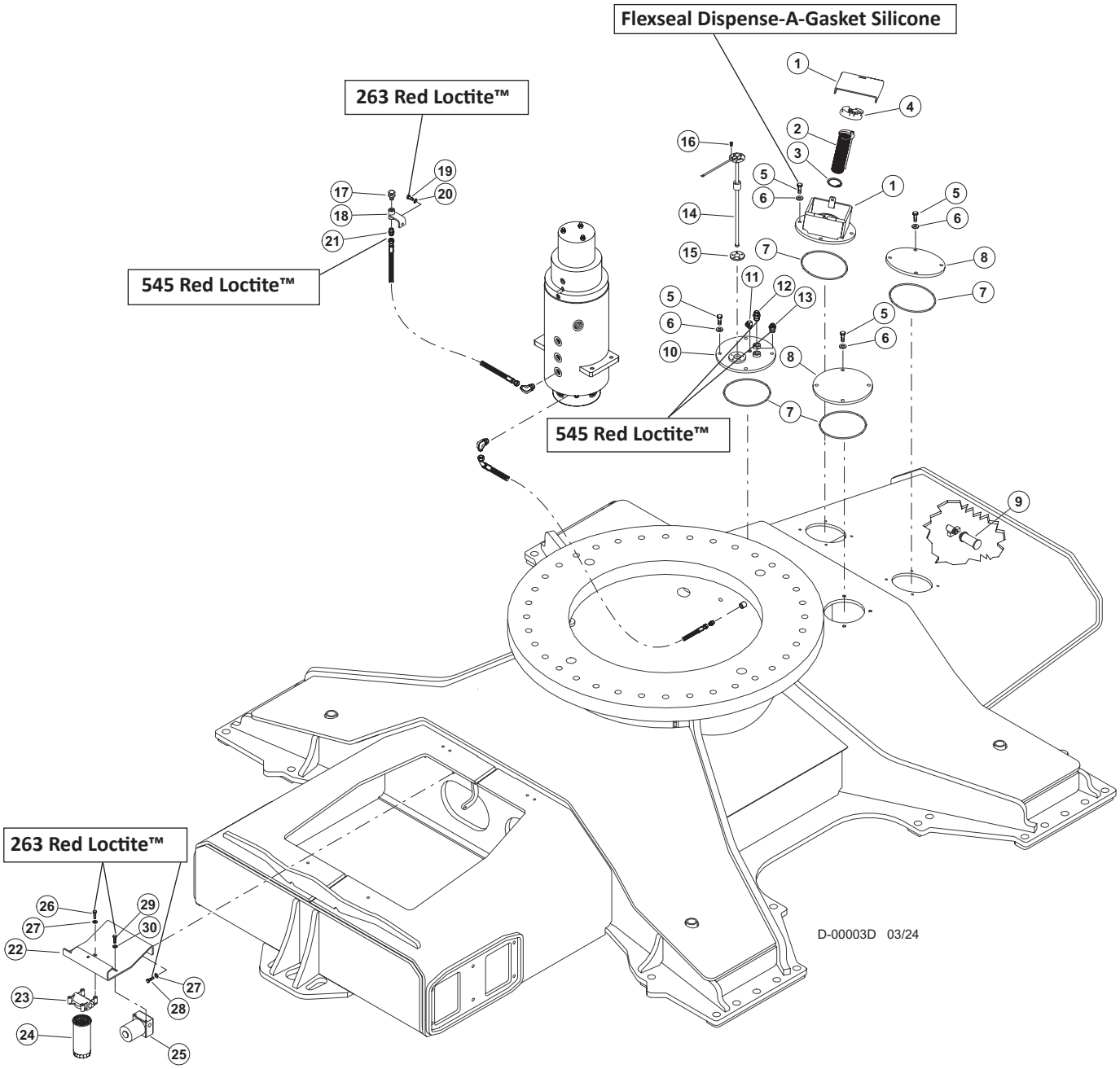

D100-00020 - FUEL TANK COMPONENTS - NON-LEVELING

Item	Part #	Description	Qty.
1	47605	COVER, LOCKING FUEL TANK	1
2	17114	STRAINER, FUEL SYSTEM	1
3	17115	RING, SNAP - FUEL STRAINER RETAINER	1
4	16585	CAP, FUEL	1
5	50100	BOLT - .5” X 1.25” **(FLEXSEAL DISPENSE-A-GASKET SILICONE)**	16
6	15534	WASHER, SAE FLAT - .5”	16
7	15600	O-RING - 8” DIA. -369	4
8	12250	COVER, ACCESS FUEL TANK	4
9	17271	FILTER, SCREEN - FUEL SYSTEM	1
10	47233	WELDMENT, ACCESS COVER W/SENDER	1
11	15505	ELBOW, 90 4-4 CLO-S **5 545 RED LOCTITE™**	1
12	15489	CONNECTOR, STR - 6400-8-8 **545 RED LOCTITE™**	1
13	53103	FITTING, 6-8 - ORB-JIC 830-B **545 RED LOCTITE™**	1
14	57219	SENDER, FUEL LEVEL W/FLOAT (NL TRACK)	1
15	SEE DESCRIPTION	GASKET, FUEL SENDER **(CALL)**	1
16	22862	SCREW, MACHINE - #10-24 X .5” (BUTTON)	4
17	54170	VENT, FUEL TANK - TRACK	1
18	46415	BRACKET, FUEL VENT NON-LEVEL MACH	1
19	15604	BOLT - .25” X .75”	1
20	10757	WASHER, SAE FLAT - .25”	1
21	15131	CONNECTOR, STR - FF2031T-0404S **545 RED LOCTITE™**	1
22	65316	MOUNT, FUEL COMPONENTS - LEV T/M	1
23	16574	MOUNT, FILTER HEAD ASSEMBLY	1
24	51751	FILTER, FUEL - SPIN-ON FUEL	1
25	57784	PUMP, FUEL - AIR DOG	1
26	15542	BOLT - .375” X .75” **263 RED LOCTITE™**	2
27	10802	WASHER, FLAT - .375”	4
28	11707	BOLT - .375” X 1” **263 RED LOCTITE™**	2
29	15605	BOLT - .3125” X .75” **263 RED LOCTITE™**	2
30	10801	WASHER, FLAT - .3125”	2

D-2270600 - FUEL TANK COMPONENTS - (DUAL PICK UP)

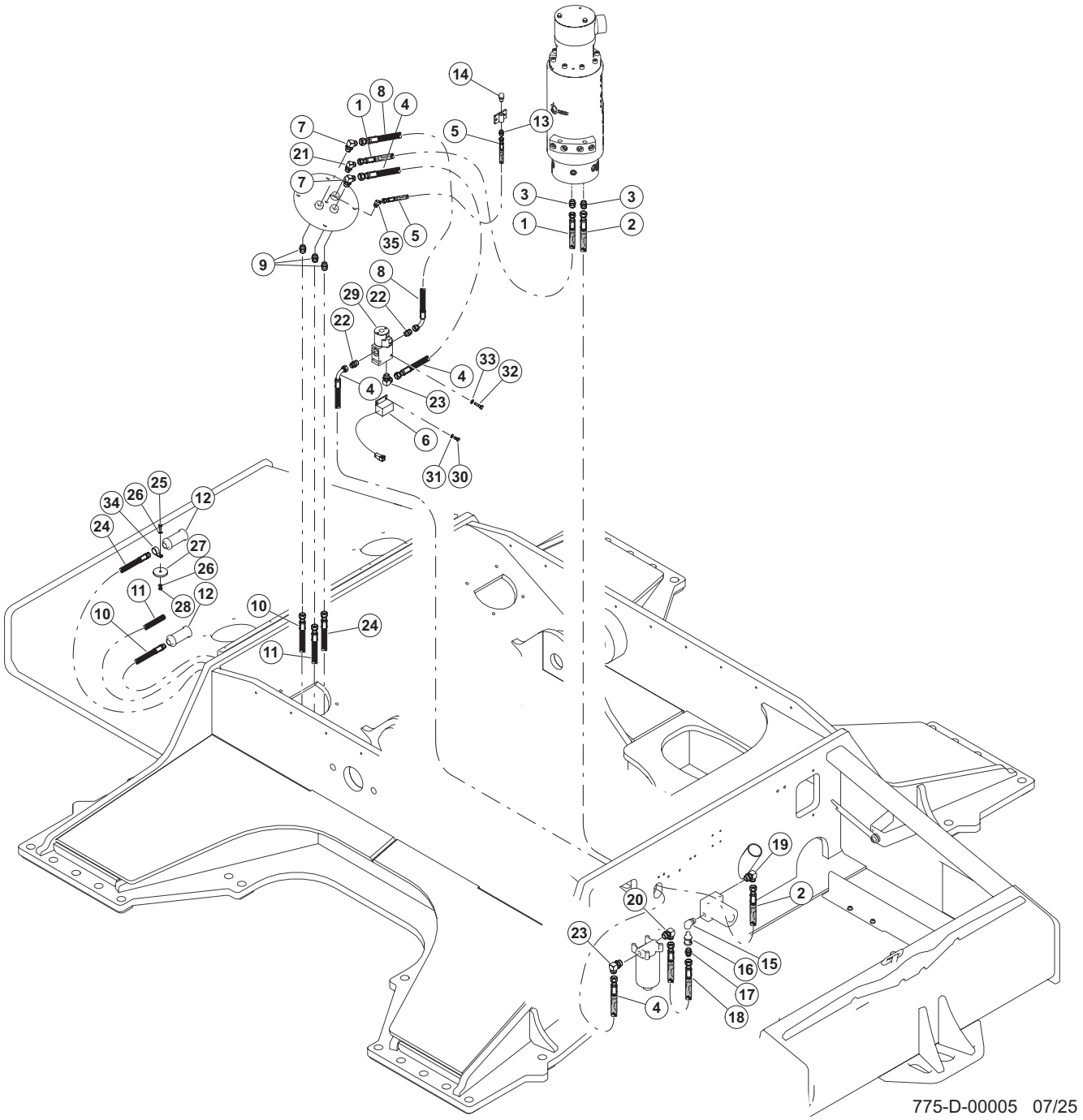

775-D-00005 07/25

D-2270600 - FUEL TANK COMPONENTS - (DUAL PICK UP)

Item	Part #	Description	Qty.
1	666760	HOSE, HYD, 221FR78 06-06JS-06JS-W - (RETURN)	1
2	666770	HOSE, HYD, 221FR74 06-06JS-06J9-W - (FUEL SUPPLY)	1
3	53887	FITTING, FUEL - ROTARY MANIFOLD #6 JIC	2
4	(SEE DESCRIPTION)	HOSE, HYD, 187TC13 08-08JS-08J9 - (FUEL SUPPLY)	1
5	666750	HOSE, HYD, 387TC75 04-04OS-04OS-W - (VENT)	1
6	59076	SWITCH, LEVEL - DUEL FUEL	1
7	15481	ELBOW, 90 - 6801-8	2
8	(SEE DESCRIPTION)	HOSE, HYD, 187TC9 08-08JS-08J9 - (FUEL SUPPLY)	1
9	15117	CONNECTOR, STR - FF1852T-0808S	3
10	666740	HOSE, HYD, 187TC42 08-08OS-08MP - (FUEL SUPPLY)	1
11	666730	HOSE, HYD, 187TC20 08-08OS-OPEN - (FUEL RETURN)	1
12	17271	FILTER, SCREEN - FUEL SYSTEM	2
13	15131	CONNECTOR, STR - FF2031T-0404S	1
14	54170	VENT	1
15	57824	FITTING, ELBOW FEMALE - RAPTOR FUEL PUMP	1
16	15652	VALVE, CHECK - HYDRAULIC/FUEL	1
17	22405	ELBOW, 90 - 8-6 C5OLO-S	1
18	58064	HOSE, FUEL RAPTOR PUMP TRACK	1
19	15480	ELBOW, 90 - 6801-6	1
20	53073	ELBOW, 90 6-JIC X 10-ORB	1
21	16009	FITTING, 6 FTX-S PIPE-JIC	1
22	15492	CONNECTOR, STR - 6400-10-8	2
23	18109	ELBOW, 90 - 6801-8-10	1
24	(SEE DESCRIPTION)	HOSE, HYD, 187TC72 08-08JS-08MP - (FUEL SUPPLY)	1
25	15604	BOLT - .25" X .75"	1
26	10757	WASHER, SAE FLAT - .25"	2
27	59075	MAGNET, FUEL PICKUP	1
28	10811	NUT, LOCK - .25"	1
29	59073	VALVE, FUEL PICKUP (3-WAY)	1
30	15669	SCREW, MACHINE - #10-24 X .5"	2
31	16208	WASHER, FLAT - #10	2
32	15575	BOLT - .25" X 1.5"	2
33	10757	WASHER, SAE FLAT - .25"	2
34	16119	CLAMP, HOSE - COATED STRAP - 1"	1
35	15505	ELBOW, 90 4-4 CLO-S	1

D-2270600-SP - FUEL TANK COMPONENTS - (DUAL PICK UP)

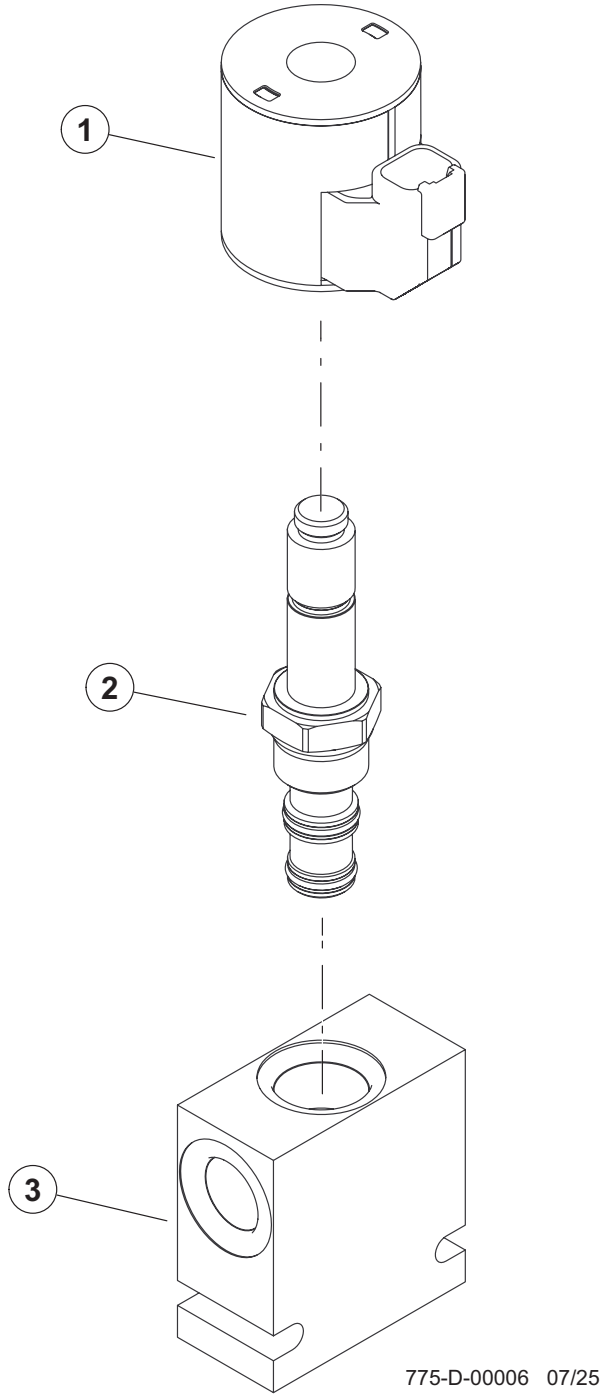

775-D-00006 07/25

Item	Part #	Description	Qty.
	59073	VALVE, FUEL PICKUP (3-WAY)	1
1	4304110	COIL	1
2	SV10-34-0-N-00	CARTRIDGE	1
3	7024380	VALVE BODY	1
*	20291	SEAL KIT	1

D100-00030 - DEF TANK COMPONENTS & COVERS

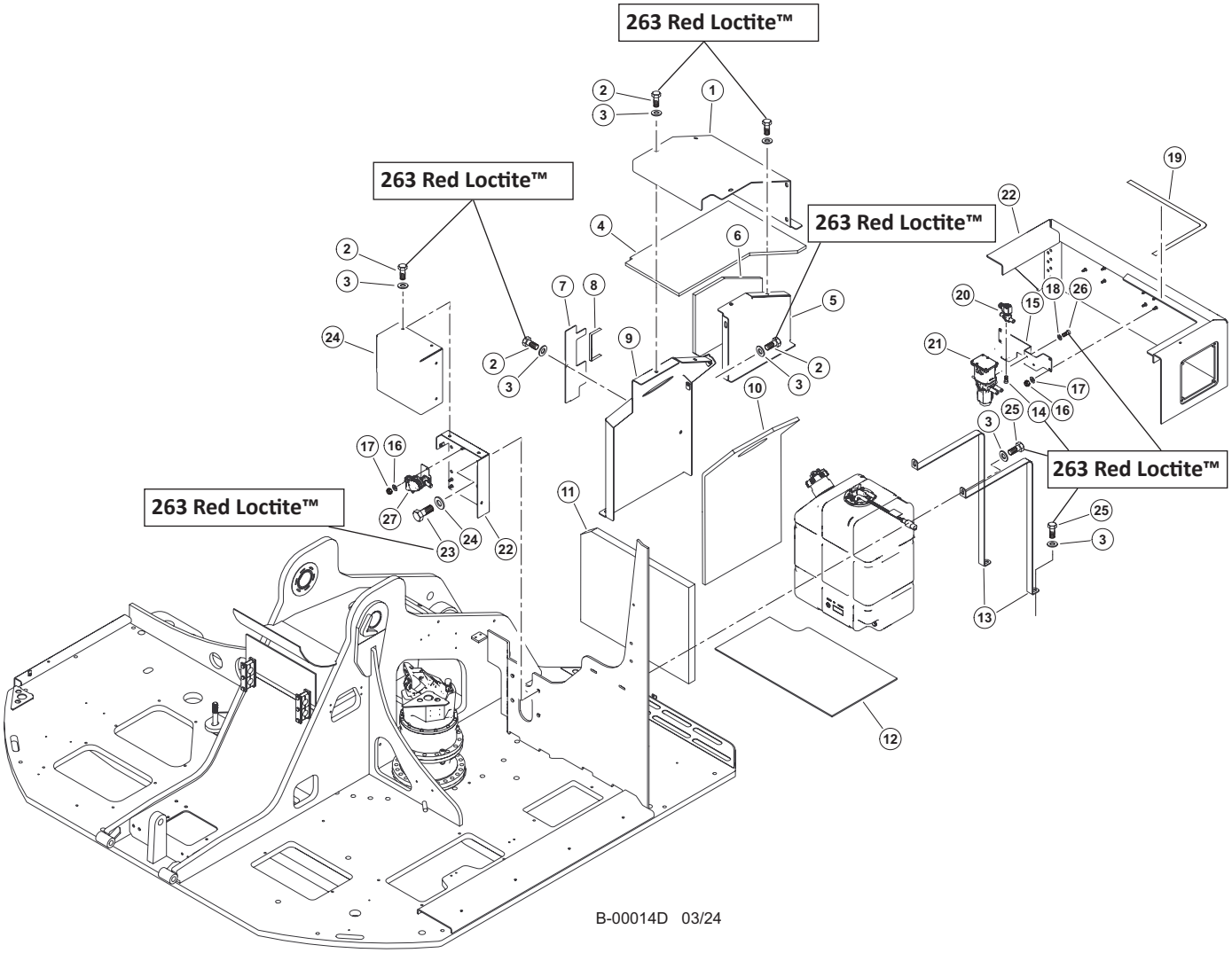

D100-00030 - DEF TANK COMPONENTS & COVERS

Item	Part #	Description	Qty.
1	60655	PLATE, DEF TANK SHROUD	1
2	15542	BOLT - .375” X .75” **263 RED LOCTITE™**	14
3	15534	WASHER, SAE FLAT - .5”	14
4	58034	INSULATION, DEF TANK TOP COVER	1
5	60657	SHROUD, DEF TANK - END COVER	1
6	58033	INSULATION, DEF TANK END COVER	1
7	60514	COVER, DEF SURROUND	1
8	24925	CHANNEL, EDGE PROTECTOR - 3/16”BULB(STR)	10”
9	60660	SHROUD, DEF TANK - END	1
10	58035	INSULATION, DEF TANK FILL PANEL	1
11	58036	INSULATION, UPPER TO DEF TANK	1
12	58037	FLOORMAT, DEF TANK D-MOD	1
13	47942	STRAP, DEF TANK - CUMMINS	2
14	87485	SOCKET HEAD CAP SCREW - 12.9 M5-0.8 X 14MM **263 RED LOCTITE™**	2
15	60134	PLATE, DEF DOSER MOUNT - STAGE V	1
16	10811	NUT, LOCK - .25”	6
17	10800	WASHER, FLAT - .25”	6
18	15559	WASHER, SAE FLAT - .3125”	2
19	18126	WEATHERSTRIPPING, RUBBER-DOOR SEAL	3’
20	SEE DESCRIPTION	SCR WATER VALVE **(CONTACT YOUR CUMMINS DEALER FOR REPLACEMENT PART)**	1
21	58431	PUMP, DOSER - CUMMINS STAGE V	1
22	654890	PLATE, DRIER AND CAB VALVE COVER	1
23	10783	BOLT - .5” X 1” **263 RED LOCTITE™**	4
24	65487	WELDMENT, DRIER AND CAB VALVE MOUNT	1
25	10402	BOLT - .375” X 1.25” **263 RED LOCTITE™**	2
26	80511	BOLT - M8 X 20	2
27	51714	VALVE, BALL - WATER SHUT OFF HEATER 1/2”	1

ELECTRICIAL SYSTEM - (E)

E100-00000 - BATTERY INSTALLATION

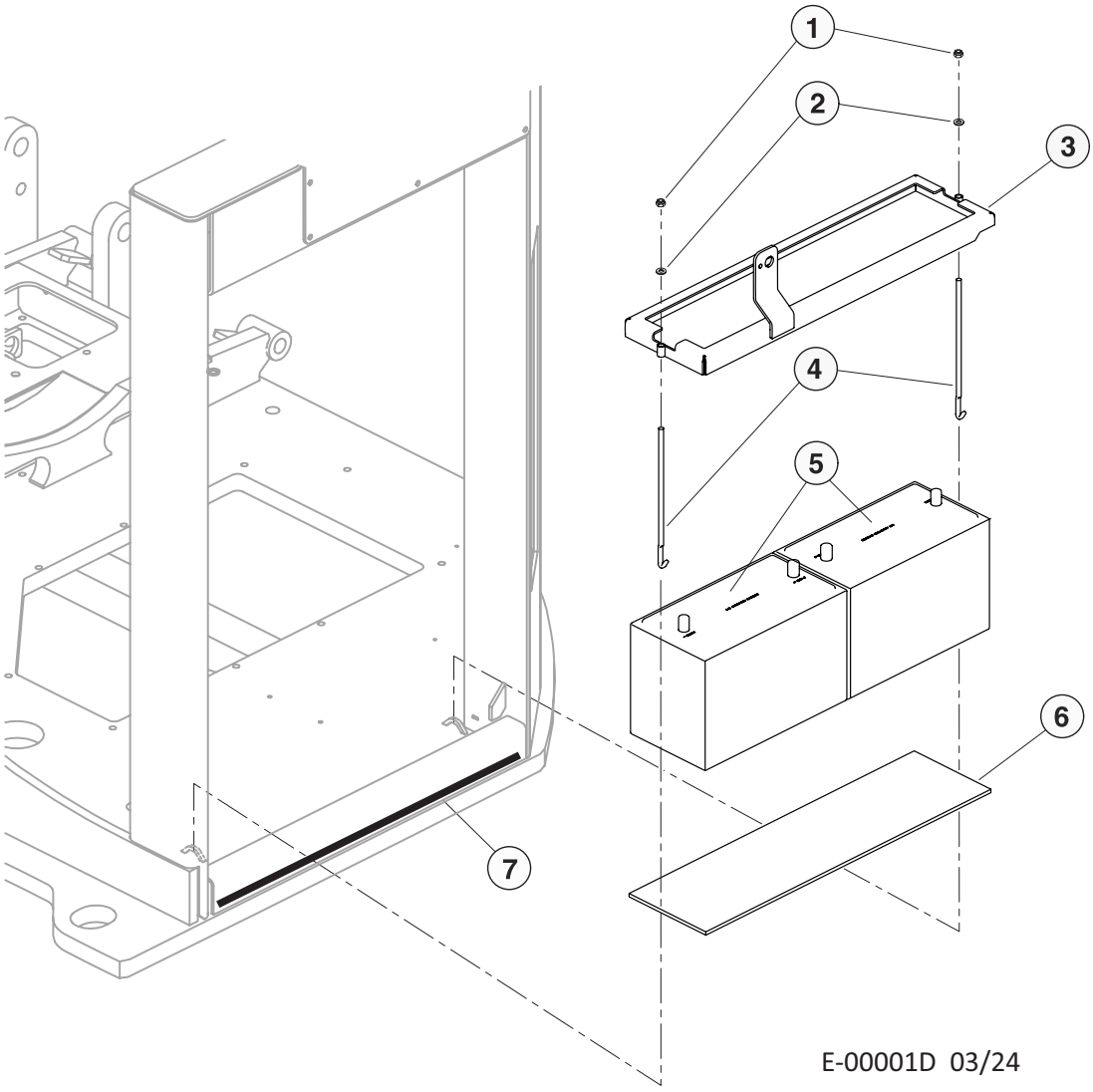

Item	Part #	Description	Qty.
1	10788	NUT, NYLOCK - .3125”	2
2	15559	WASHER, SAE FLAT - .3125”	2
3	45537	BRACKET, BATTERY HOLD DOWN	1
4	51722	HOLD DOWN, BATTERY	2
5	17150	BATTERY, HEAVY DUTY	2
6	45720	RUBBER, ISOLATOR - BATTERY HOLD DOWN	1
7	52552	EDGE GUARD - (BULK ROLL)	2’

E100-00010 - ELECTRICIAL HARNESS - (IQAN SYSTEM)

ADD DIELECTRIC SILICONE GREASE TO ELECTRICIAL CONNECTORS

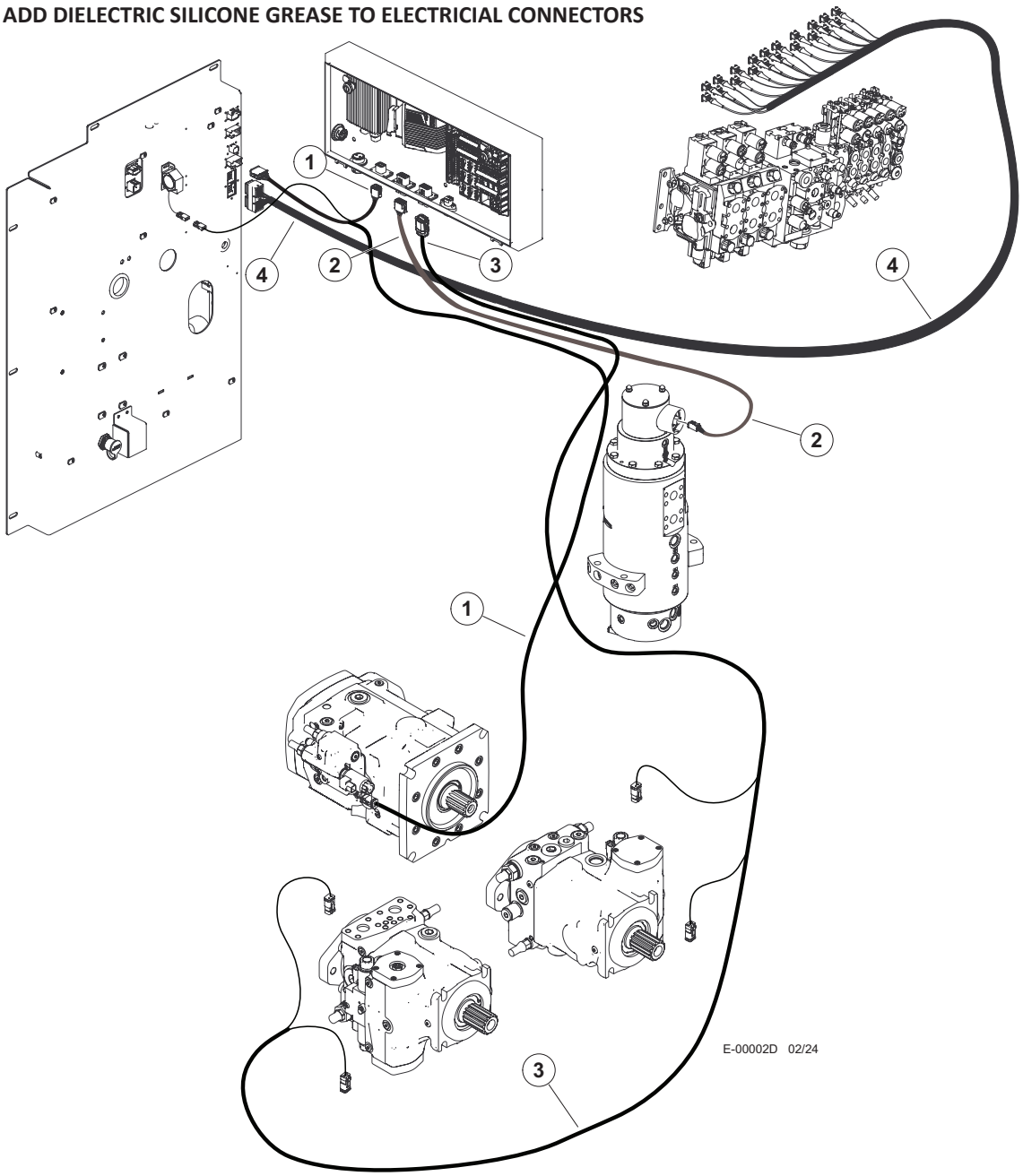

Item	Part #	Description	Qty.
1	54527	HARNESS, XA2 PAN TO CAB - TIER4	1
2	54843	HARNESS, ROTARY MAN - TRACK- TIER4	1
3	54528	HARNESS, HYDROSTATIC PUMP - TIER4	1
4	58071	HARNESS, CONTROL VALVE - D-SERIES	1

E100-00020 - ELECTRICIAL HARNESS - (IQAN SYSTEM) (HYD. TANK SENSORS, FAN MOTOR & CHARGE SYSTEM)

ADD DIELECTRIC SILICONE GREASE TO ELECTRICIAL CONNECTORS

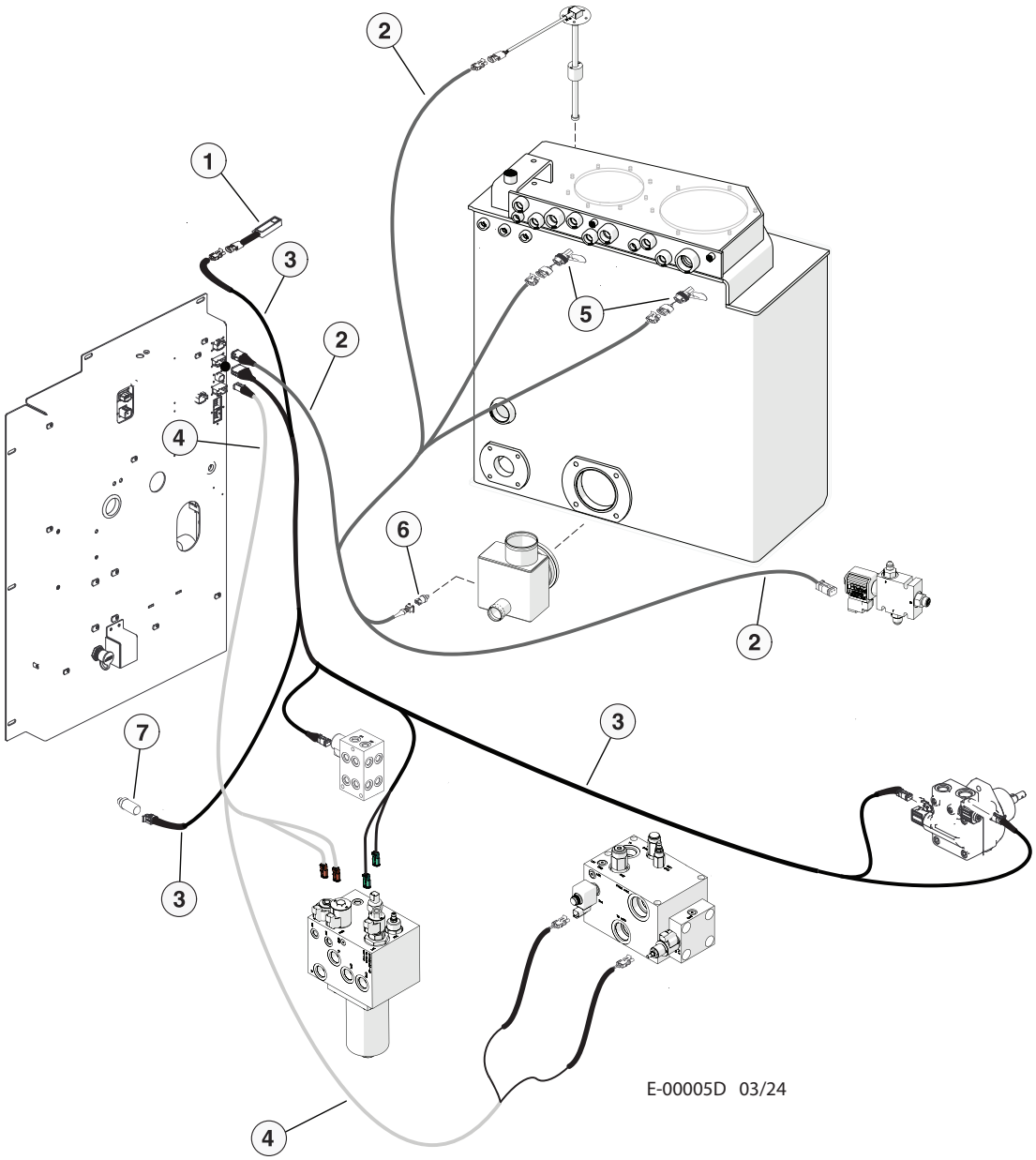

Item	Part #	Description	Qty.
1	55264	SWITCH, LIMIT - DOOR/GULLWING (MAGNETIC)	1
2	60395	HARNESS, HYDRAULIC TANK SENSOR - D-SERIE	1
3	57917	HARNESS, CHARGE-FAN - D MODEL	1
4	57918	HARNESS, TR MS PB DISC CABLE D-SERIES	1
5	58307	SWITCH, PRESSURE	2
6	24531	TRANSDUCER, HYD TEMP	1
7	24532	TRANSDUCER, DISC SAW PRESSURE	1

E100-00030 - ELECTRICIAL HARNESS - (LOAD CENTER POWER)

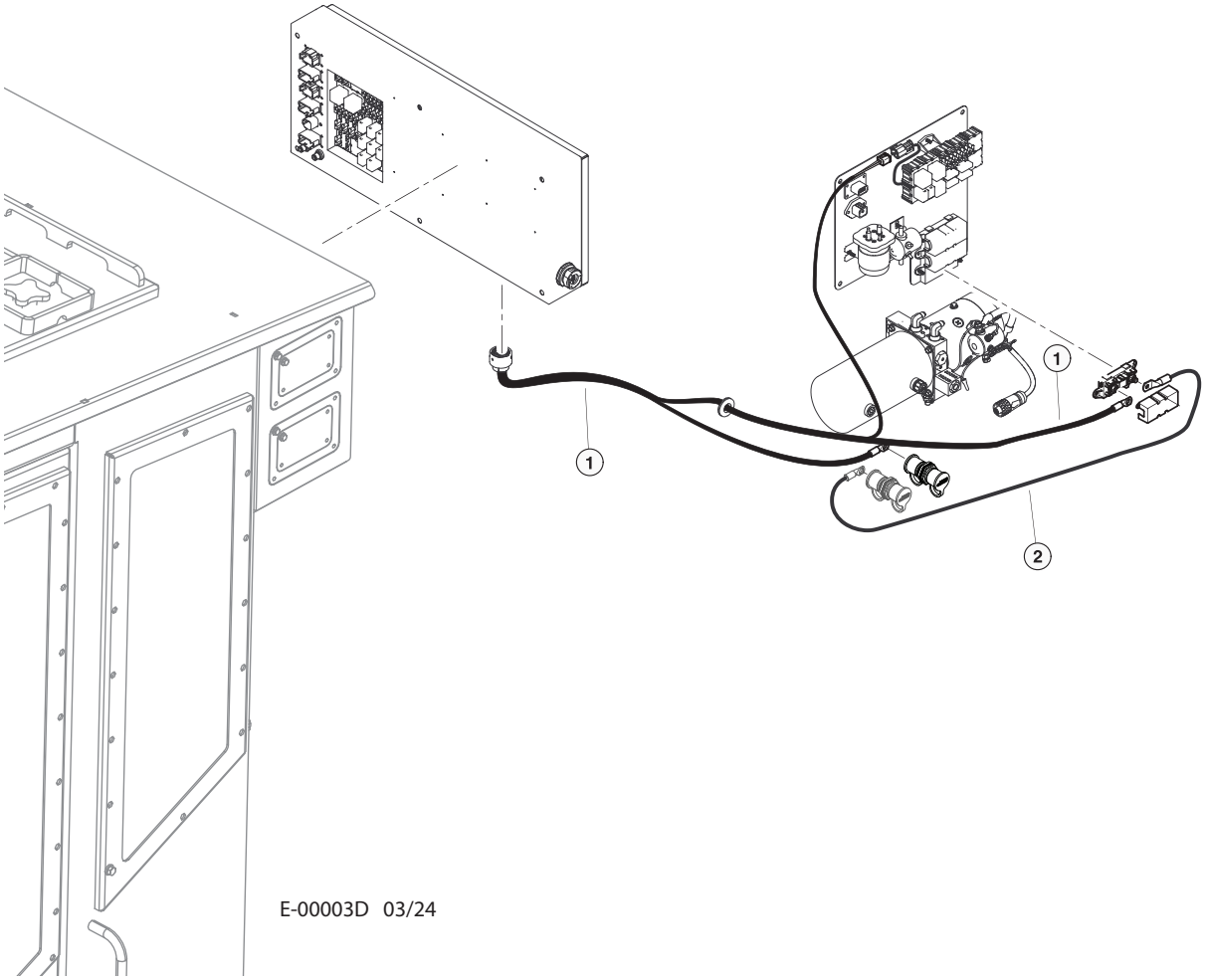

ADD DIELECTRIC SILICONE GREASE TO ELECTRICIAL CONNECTORS

Item	Part #	Description	Qty.
1	54581	HARNESS, CAB POWER TIER4	1
2	58096	HARNESS, FUSE TO STUD, POSITIVE	1

E100-00040 - ELECTRICIAL HARNESS - (CAB TO ENGINE)

ADD DIELECTRIC SILICONE GREASE TO ELECTRICIAL CONNECTORS

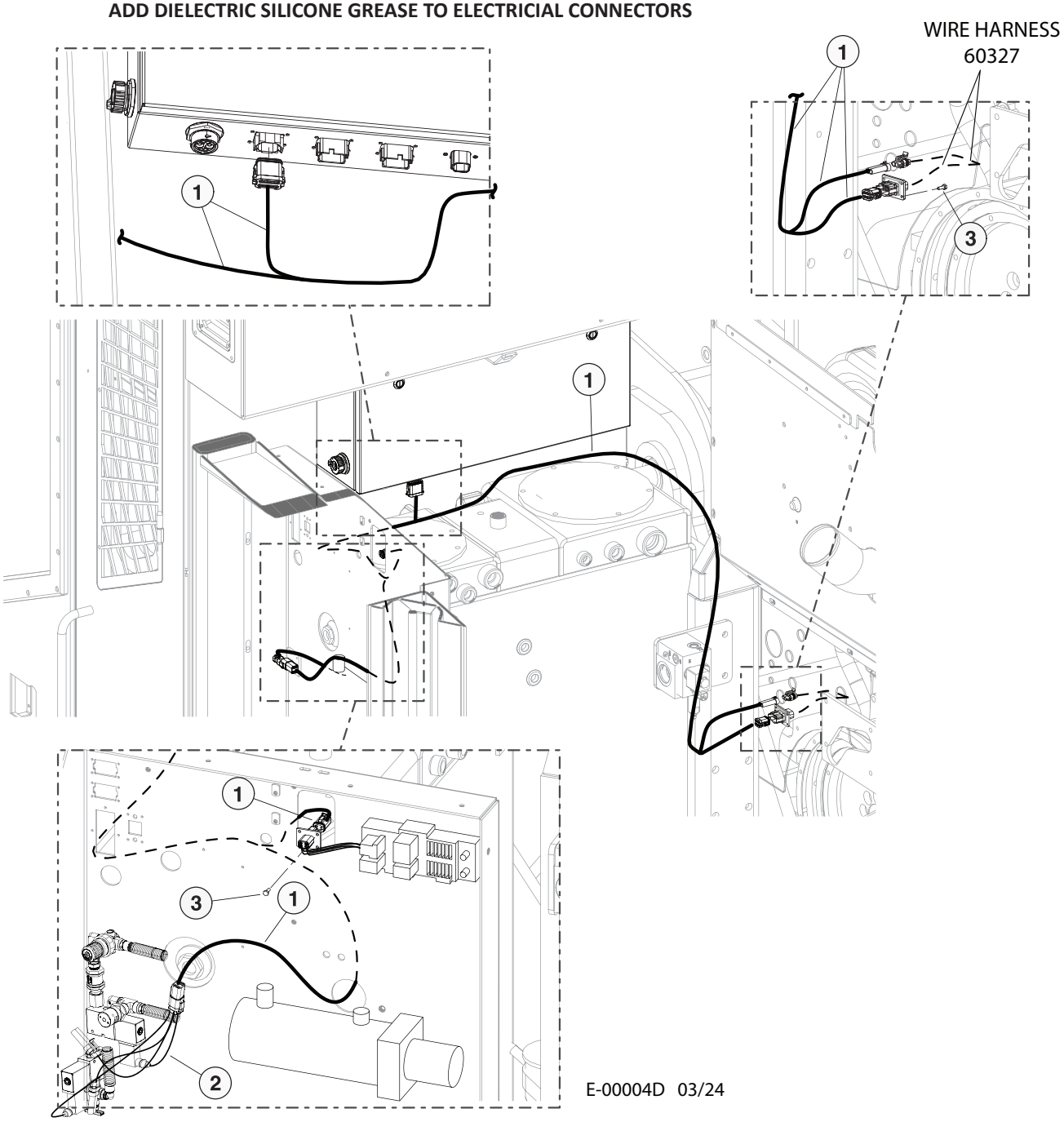

E-00004D 03/24

Item	Part #	Description	Qty.
1	60330	HARNESS, CAB TO ENGINE - CUMMINS STG5	1
2	55193	HARNESS, VAC VENT FILL	1
3	22862	SCREW, MACHINE - #10-24 X .5” (BUTTON)	8

E-2227300 - IQAN LOAD CENTER COMPONENTS S/N: UP TO 1237

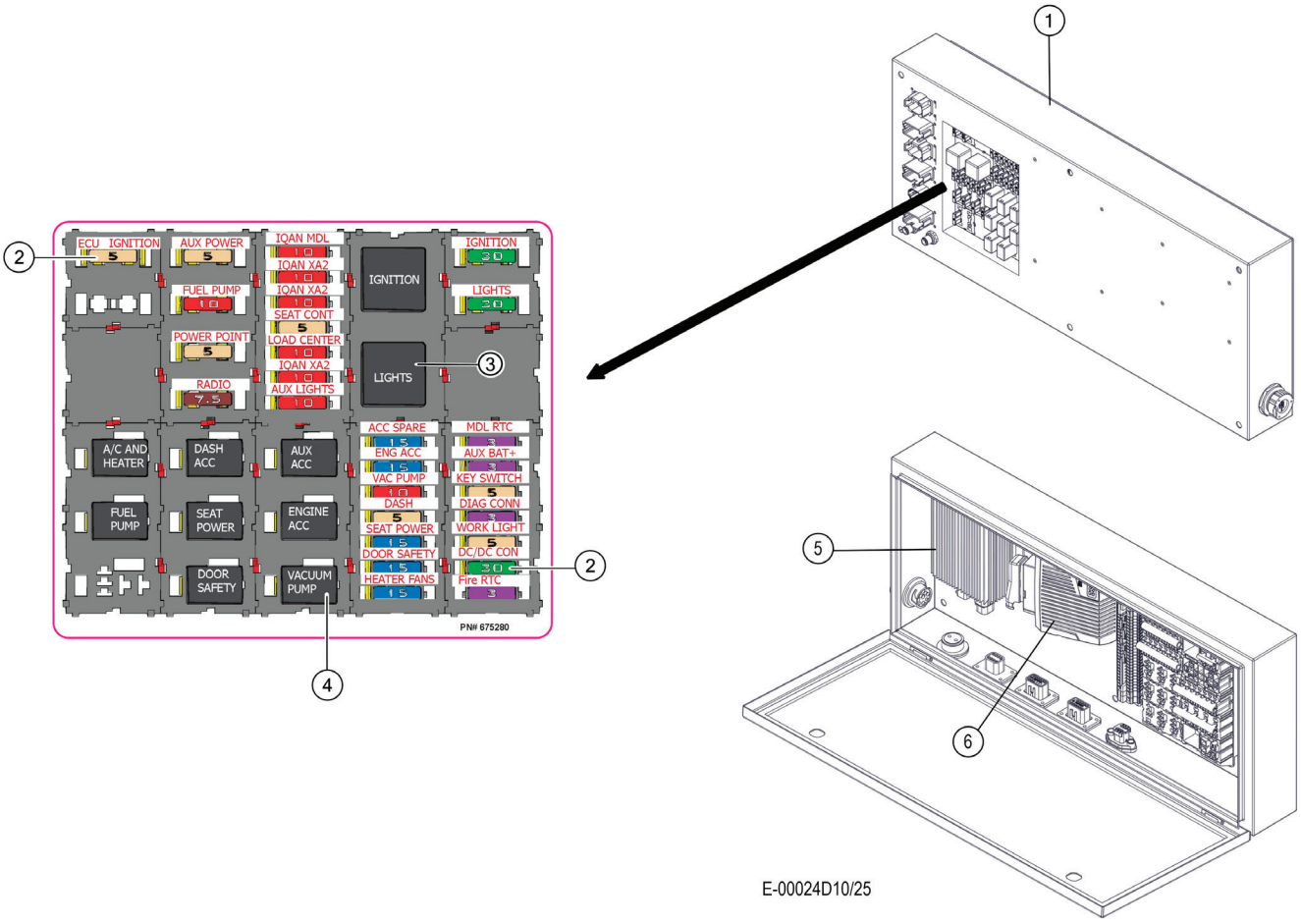

Item	Part #	Description	Qty.
1	(See Description)	LOAD CENTER (SUPPLIER PART # GS17253100)	1
2	24533	FUSE, ATO - 5 AMP (SPADE STYLE)	6
	24511	FUSE, ATO - 3 AMP (SPADE STYLE)	3
	50401	FUSE, ATO - 30 AMP (SPADE STYLE)	3
	24534	FUSE, ATO - 7.5 AMP (SPADE STYLE)	1
	24512	FUSE, ATO - 10 AMP (SPADE STYLE)	8
	50400	FUSE, ATO - 15 AMP (SPADE STYLE)	5
3	24323	RELAY, 24-VOLT (MAIN ELEC 30 AMP)	2
4	53645	RELAY, ZETTLER AZ988-1C-24DE-C1	8
5	55483	CONVERTER, 24V TO 12V	1
6	53095	MODULE, XA2 - IQAN	1

E-2227300 - IQAN LOAD CENTER XC43 COMPONENTS S/N: 1238 & FORWARD

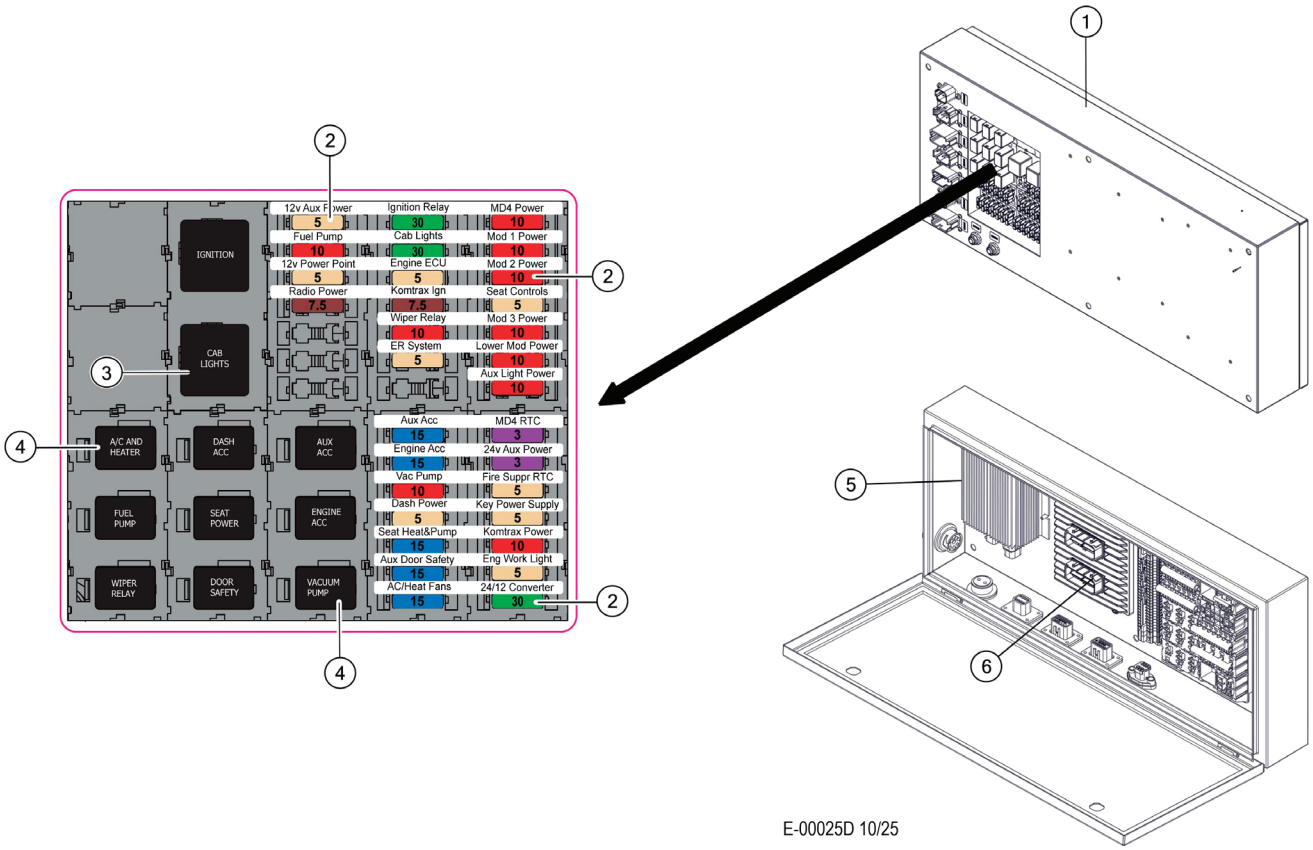

Item	Part #	Description	Qty.
1	669520	LOAD CENTER, E-MODEL MACHINE	
2	24533	FUSE, ATO - 5 AMP (SPADE STYLE)	
	24511	FUSE, ATO - 3 AMP (SPADE STYLE)	
	50401	FUSE, ATO - 30 AMP (SPADE STYLE)	
	24534	FUSE, ATO - 7.5 AMP (SPADE STYLE)	
	24512	FUSE, ATO - 10 AMP (SPADE STYLE)	
	50400	FUSE, ATO - 15 AMP (SPADE STYLE)	
3	24323	RELAY, 24-VOLT (MAIN ELEC 30 AMP)	
4	53645	RELAY, ZETTLER AZ988-1C-24DE-C1	
5	55483	CONVERTER, 24V TO 12V	
6	669510	MODULE, EXPANSION - IQAN XC43	

E100-00050 - ELECTRICIAL HARNESS - (FRONT DOOR)

ADD DIELECTRIC SILICONE GREASE TO ELECTRICIAL CONNECTORS

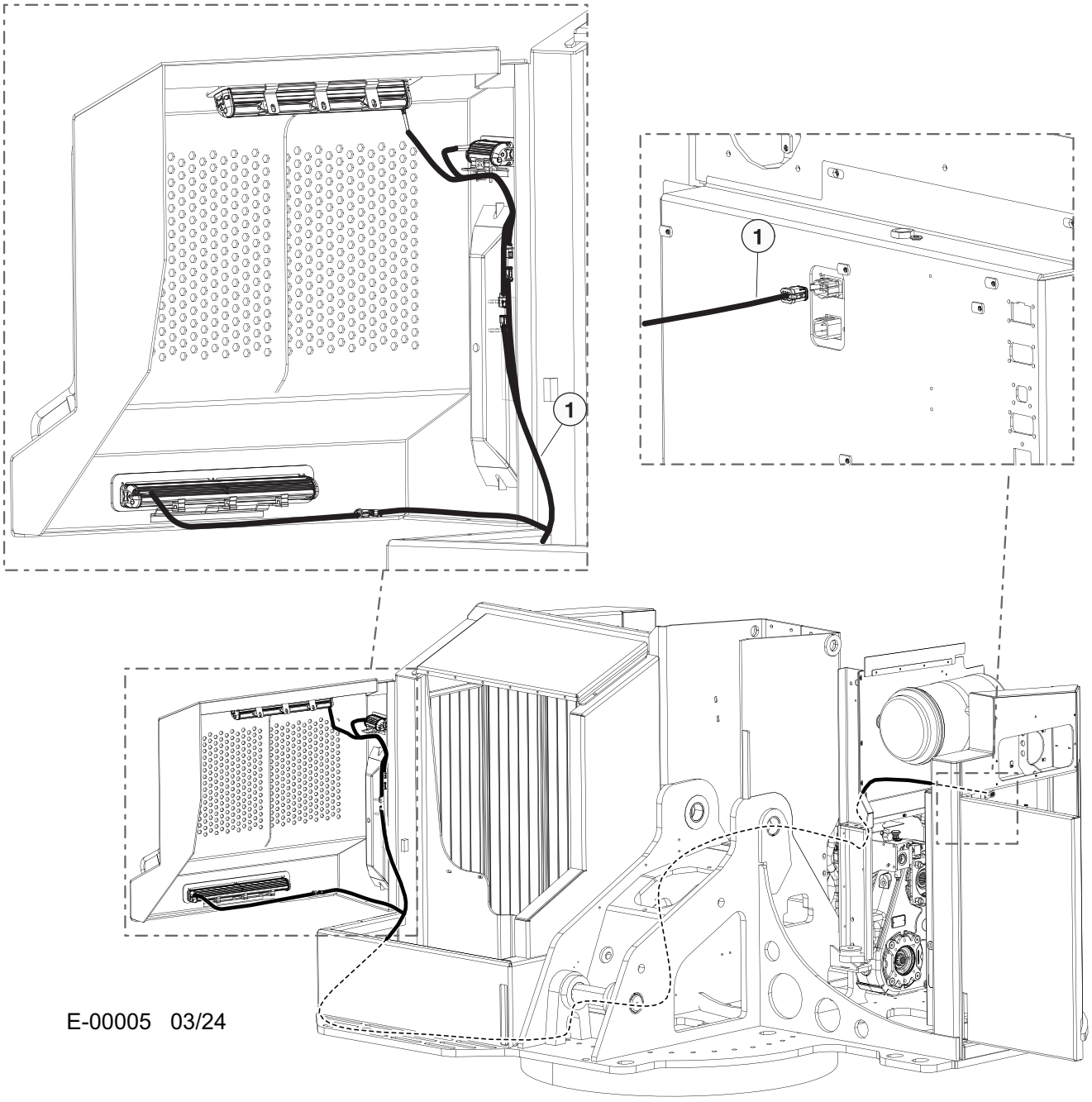

Item	Part #	Description	Qty.
1	54542	HARNESS, LIGHTS-FRONT DOOR - TIER 4	1

E100-00060 - ELECTRICIAL HARNESS ACCESSORIES

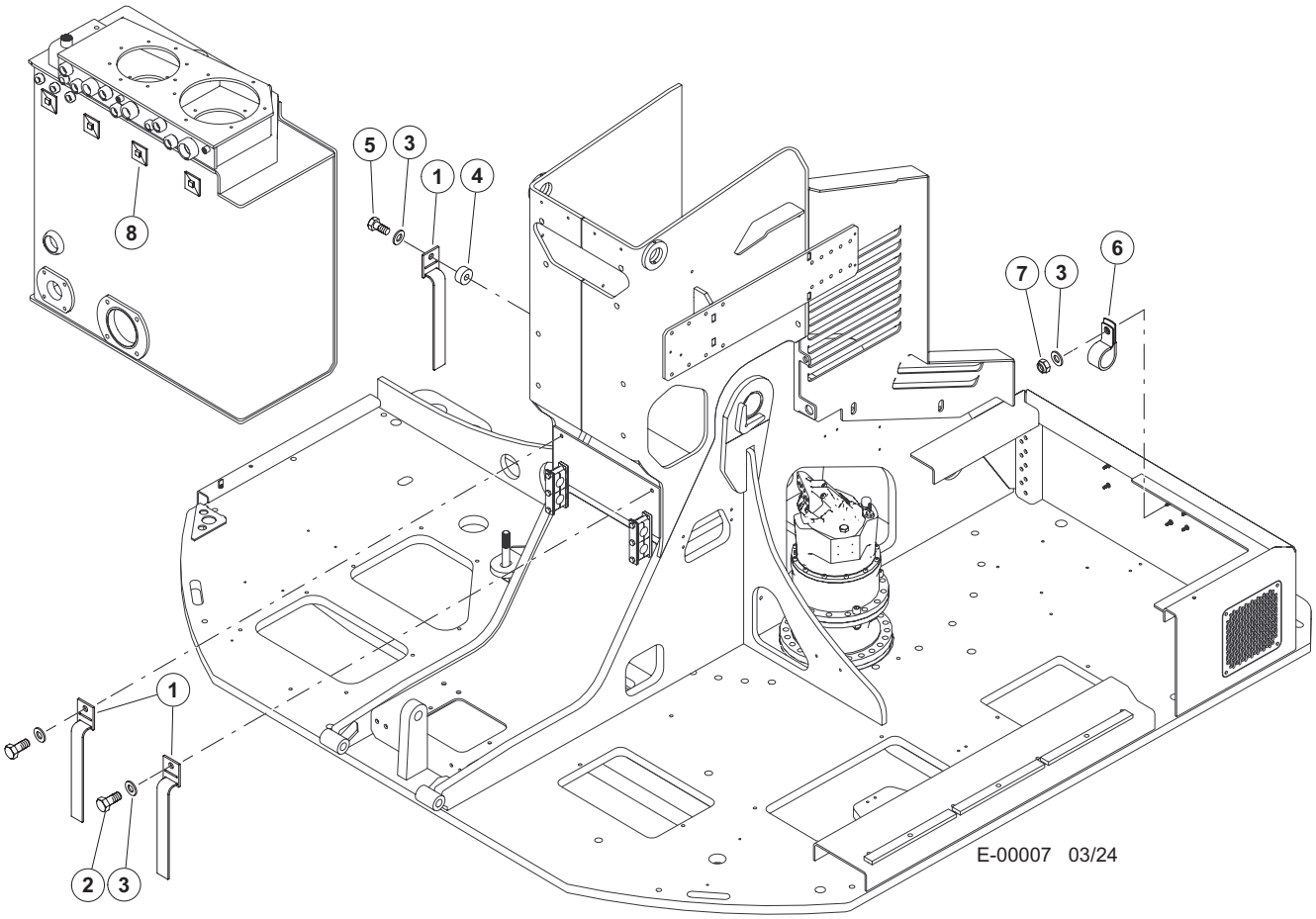

Item	Part #	Description	Qty.
1	57878	STRAP, HANGING W/ BUCKLE	3
2	15576	BOLT - .25” X 1”	2
3	10757	WASHER, SAE FLAT - .25”	4
4	19219	SPACER	1
5	18309	BOLT - .25” X 1.25”	1
6	59106	CABLE CLAMP, CUSHIONED, 0.406” DIA	1
7	10811	NUT, LOCK - .25”	1
8	59131	CABLE TIE BASE	AR
	ELECTRICIAL CONNECTOR COMPONENTS (NOT SHOWN IN ILLUSTRATIONS)		
	53176	CONNECTOR, TERMINAL 16-18G SOLID DEUTSCH	
	54065	SOCKET, CONTACT - 2	
	54064	SOCKET, WEDGE LOCK - #2	
	51909	PIN, FEMALE - DEUTSCH 12-14GA	

E100-00070 - STARTER AND ALTERNATOR ELECTRICIAL CABLES

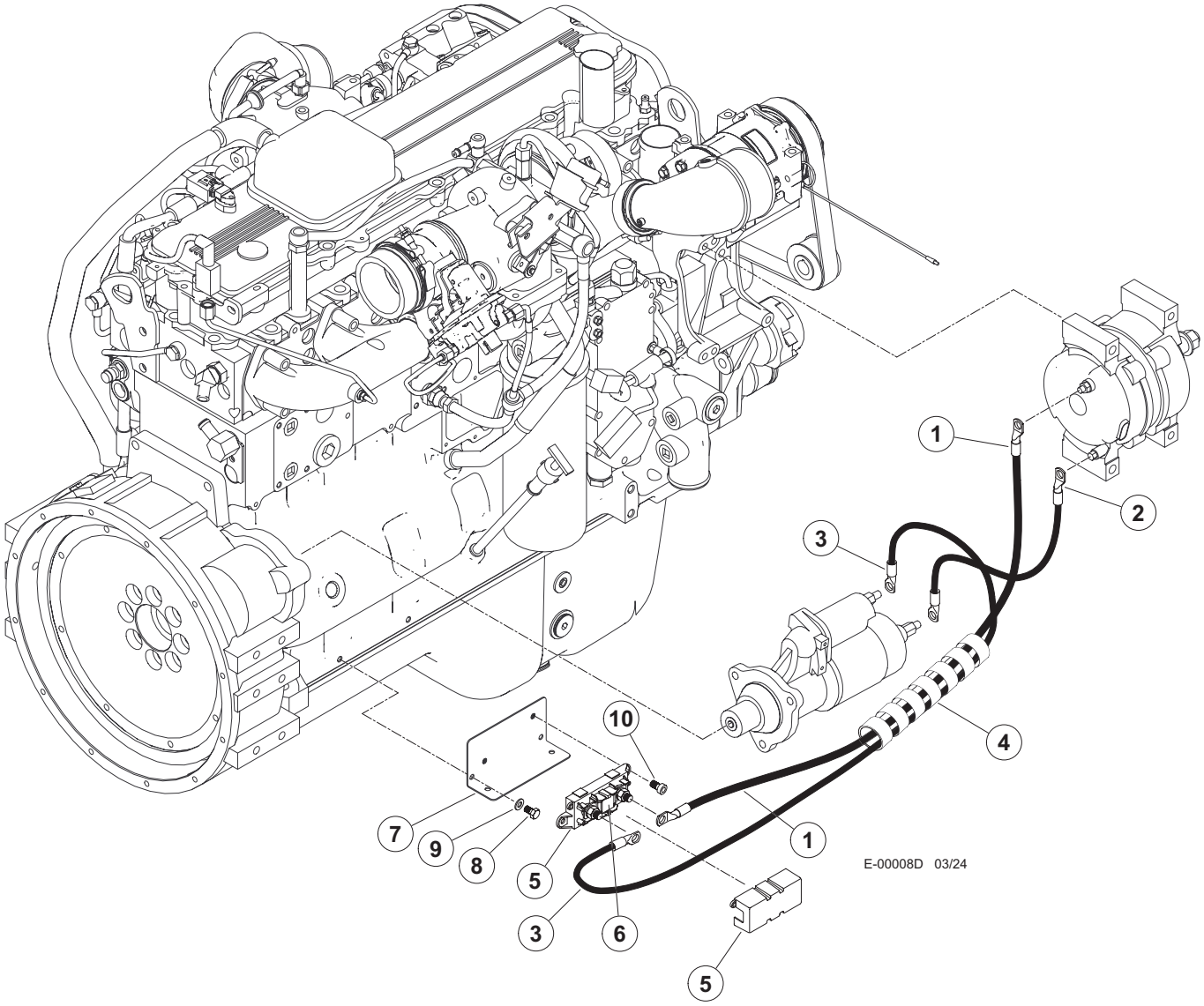

Item	Part #	Description	Qty.
1	62051	CABLE, BATTERY - D - 30” ALT	1
2	57922	CABLE, BATTERY - NEGATIVE - 30.5”	1
3	55332	CABLE, BATTERY - POSITIVE - 26”	1
4	20843	SPIRAL WRAP	AR
5	22247	HOLDER, FUSE - 100 OR 250 AMP MEGA	1
6	23619	FUSE, 100 AMP (MEGA)	1
7	60433	BRACKET, FUSE HOLDER	1
8	25059	BOLT - 8MM-1.25P X 20MM	2
9	15559	WASHER, SAE FLAT - .3125”	2
10	16133	BOLT - 6MM-1.0P X 16MM	2

E100-00080 - ENGINE ELECTRICIAL HARNESS

ADD DIELECTRIC SILICONE GREASE TO ELECTRICIAL CONNECTORS

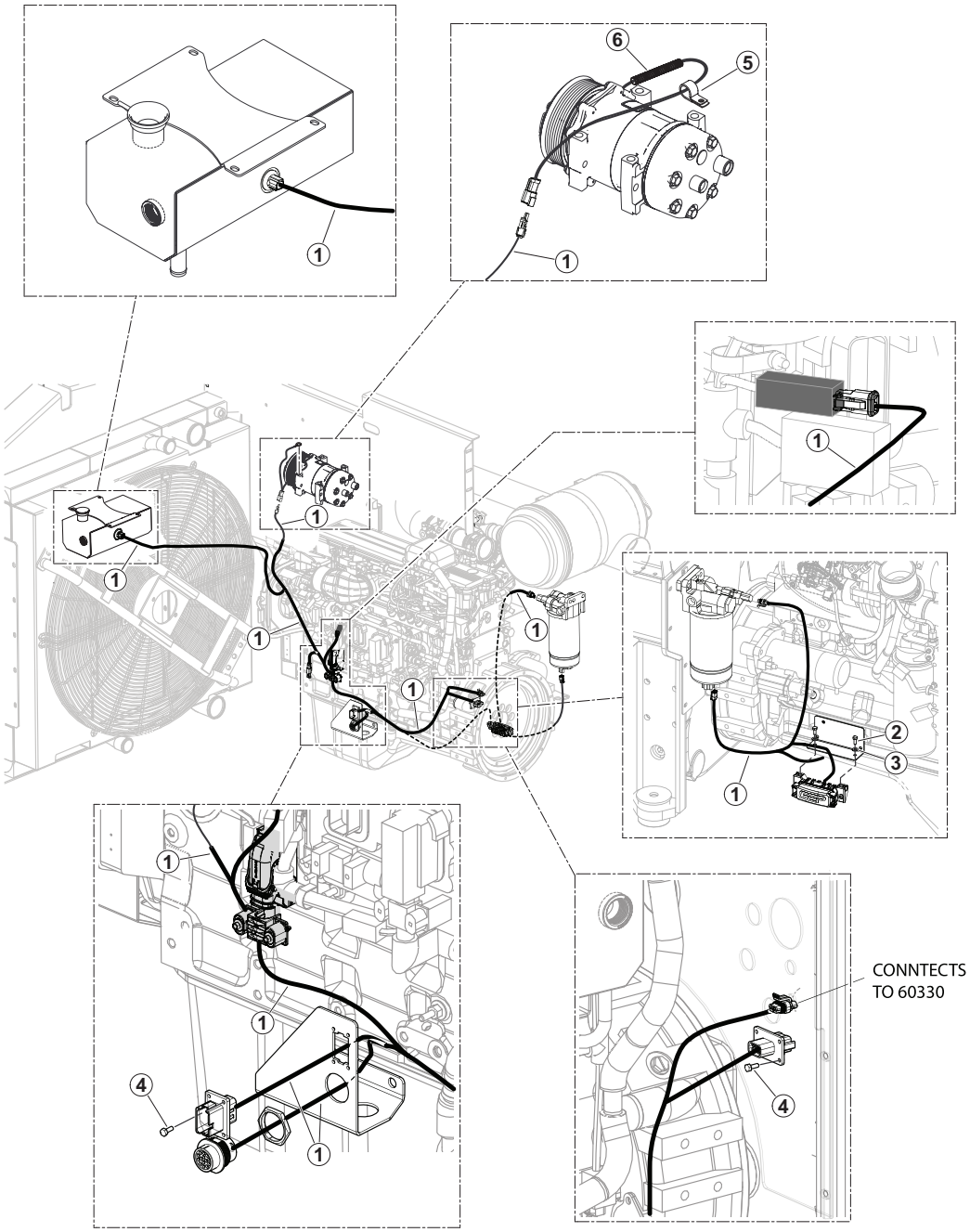

E-00009D 03/24

Item	Part #	Description	Qty.
1	60327	HARNESS, ENGINE - CUMMINS STG5	1
2	16133	BOLT - 6MM-1.0P X 16MM	2
3	10800	WASHER, FLAT - .25”	2
4	15669	SCREW, MACHINE - #10-24 X .5”	4
5	59128	CABLE CLAMP, CUSHIONED, 1/2” (.406”)	1
6	17449	LOOM, SPLIT - .5” (BULK)	1’

E100-00090 - ENGINE ECU GROUND HARNESS

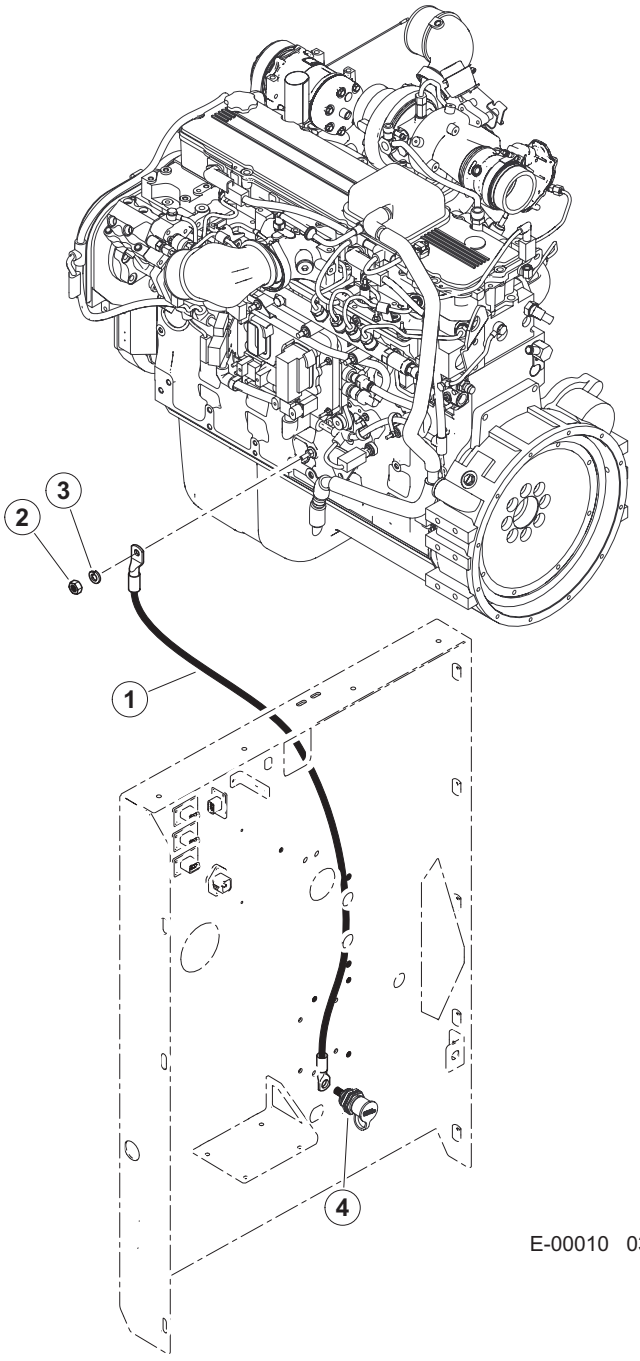

Item	Part #	Description	Qty.
1	58958	HARNESS, GROUND CABLE ENGINE ECU L9	1
2	16117	NUT, HEX - 6MM	1
3	10756	WASHER, LOCK - .25”	1
4	54642	STUD, THRU BATTERY CABLE 1/2” NEGATIVE	1

E100-00100 - ENGINE AFTER TREATMENT ELECTRICIAL HARNESS

ADD DIELECTRIC SILICONE GREASE TO ELECTRICIAL CONNECTORS

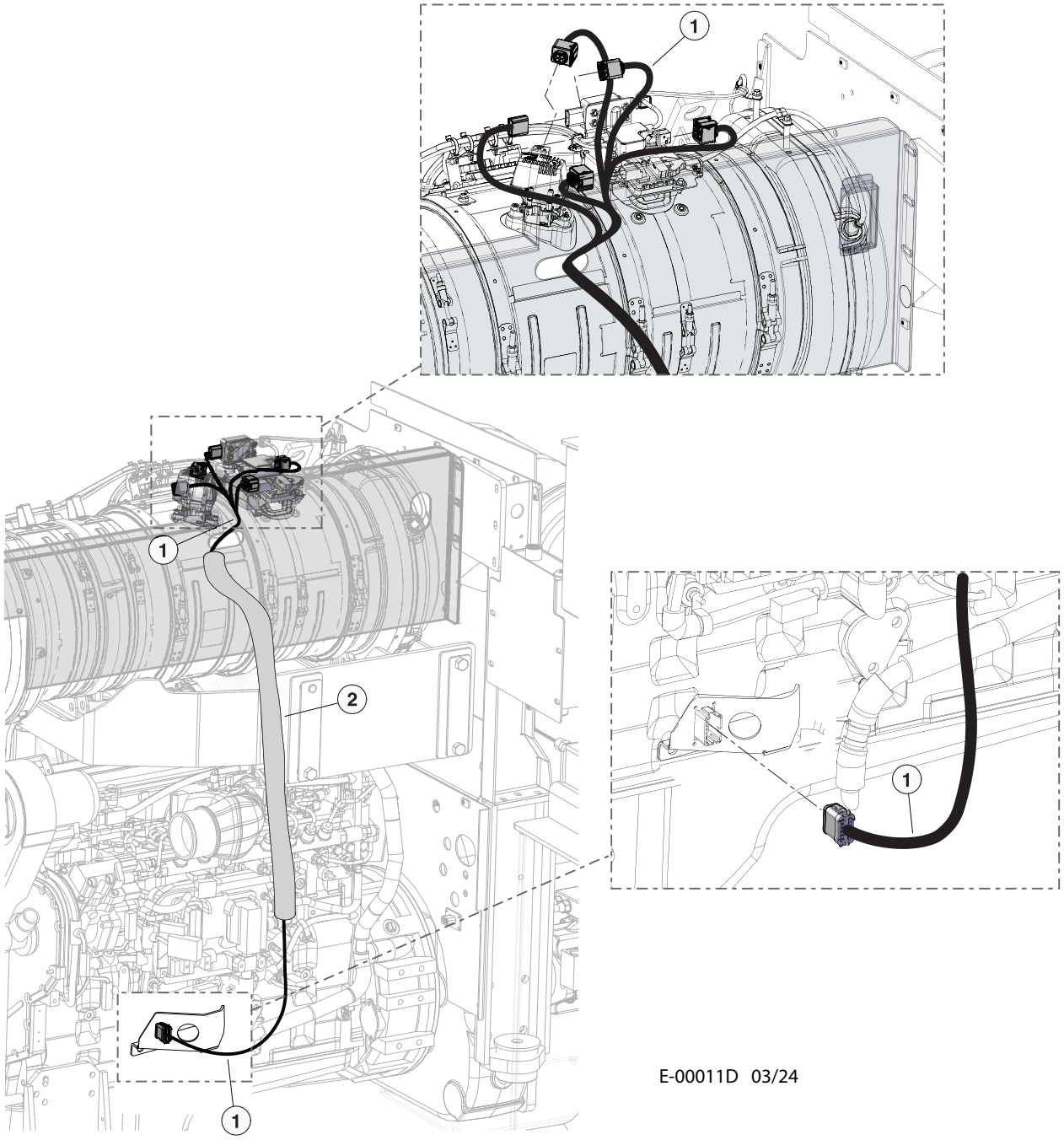

E-00011D 03/24

Item	Part #	Description	Qty.
1	60329	HARNESS, AFTER TREATMENT - CUMMINS STG5	1
2	59070	SLEEVE, PROTECTIVE - 2 INCH x 36” L	1

E100-00110 - GRID HEATER, FILL PUMP & GULLWING PUMP ELECTRICIAL HARNESSES

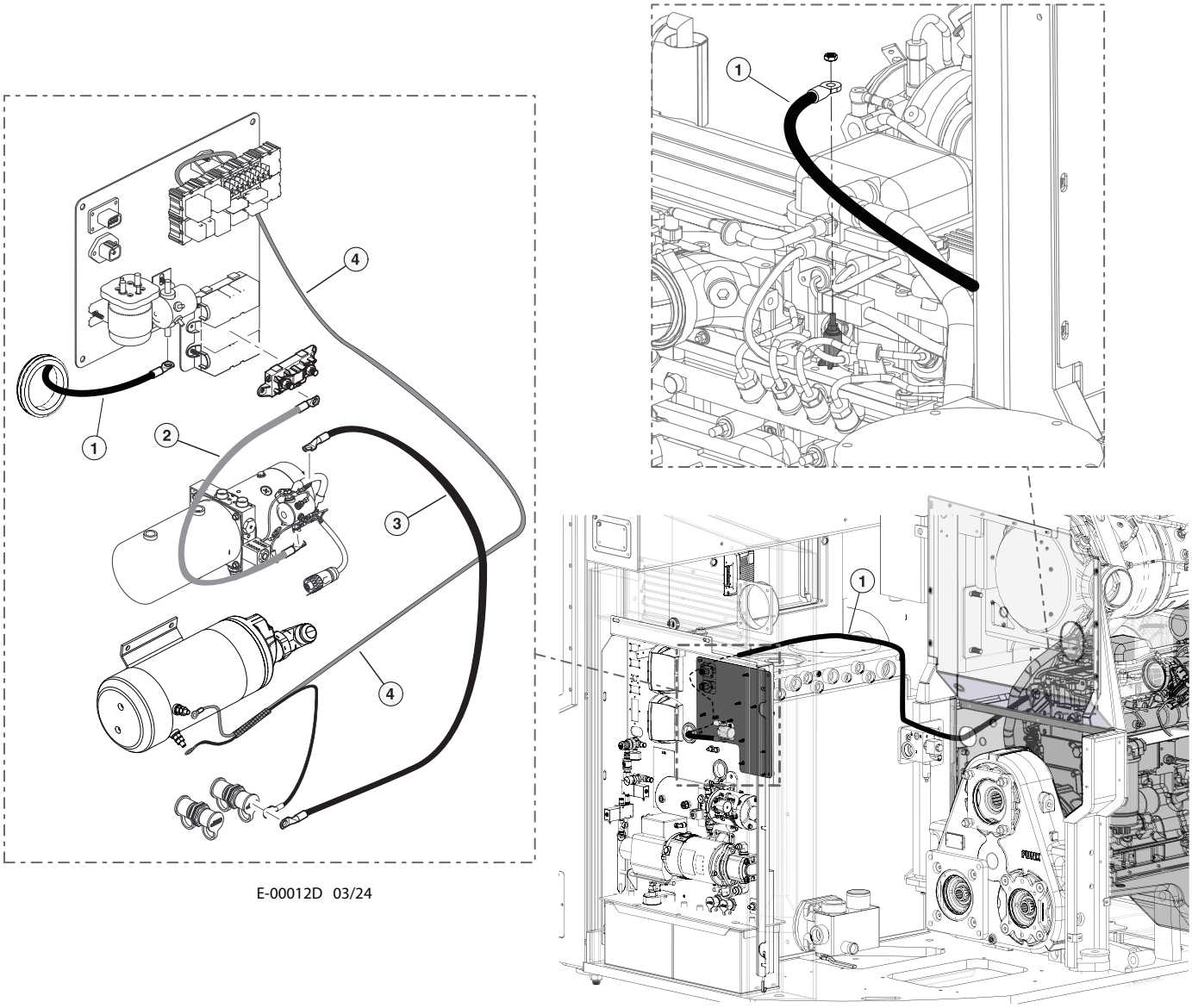

E-00012D 03/24

Item	Part #	Description	Qty.
1	55446	CABLE, GRID HEATER FUSE	1
2	55338	CABLE, BATTERY - POSITIVE - 38”	1
3	55336	CABLE, BATTERY - NEGATIVE - 24”	1
4	46695 (KIT)	HARNESS, FILL PUMP (PART OF ENGINE ELECTRICAL CENTER ASSEMBLY)	1

E100-00120 - STARTER CABLES

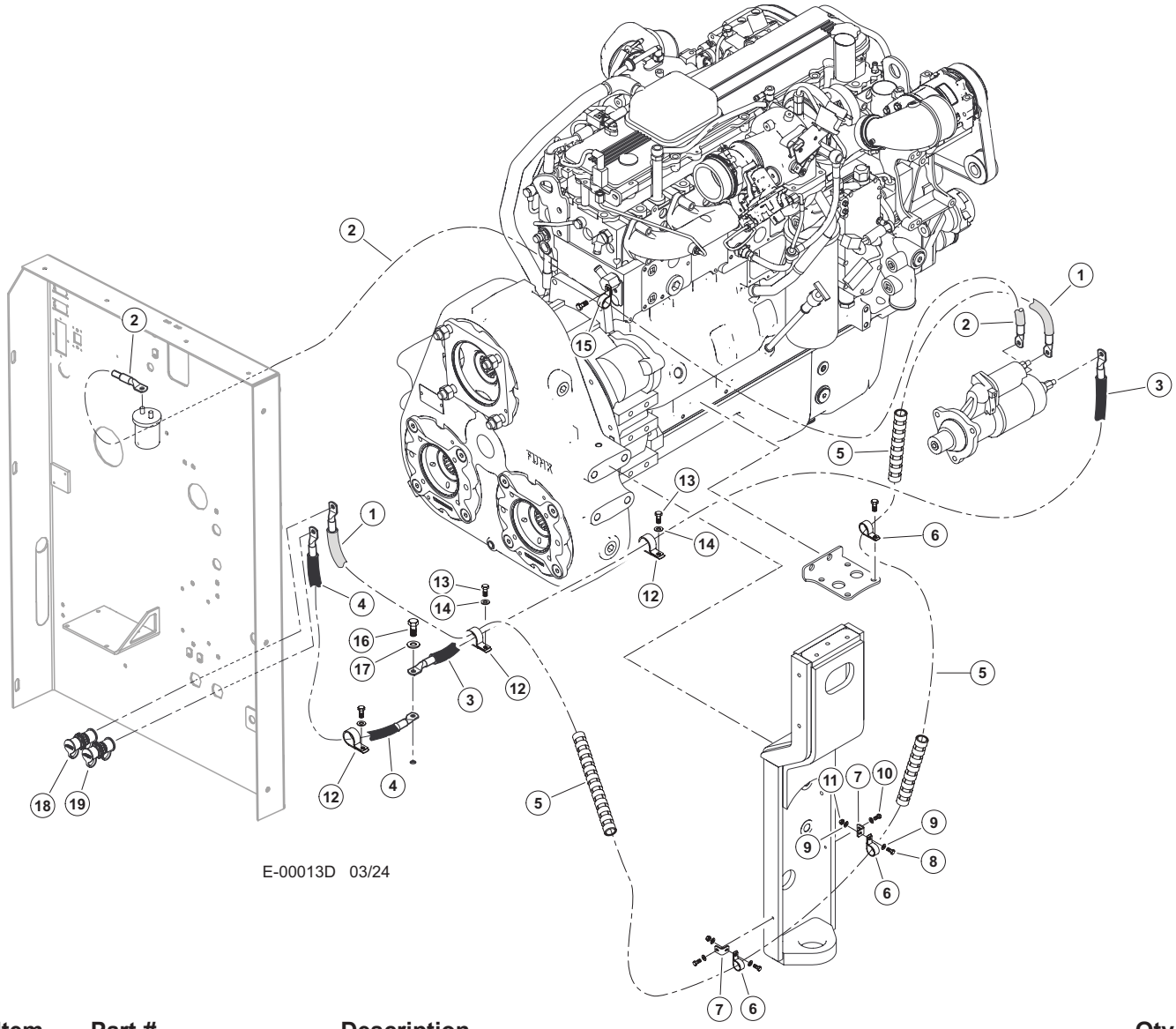

Item	Part #	Description	Qty.
1	55327	CABLE, BATTERY - POSITIVE - 94”	1
2	55194	HARNESS, START RELAY TO STARTER SOL.	1
3	55328	CABLE, BATTERY - NEGATIVE - 46”	1
4	55329	CABLE, BATTERY - NEGATIVE - 54”	1
5	19677	PROTECTOR, HOSE - SPRIAL (1.25”)(BULK)	AR
6	16119	CLAMP, HOSE - COATED STRAP - 1”	3
7	46421	BRACKET, COOLER LINE SUPPORT	3
8	18309	BOLT - .25” X 1.25”	2
9	10757	WASHER, SAE FLAT - .25”	4
10	15576	BOLT - .25” X 1”	2
11	10811	NUT, LOCK - .25”	1
12	58382	CABLE CLAMP, CUSHIONED, 1_1/4” DIA	3
13	15605	BOLT - .3125” X .75”	3
14	15559	WASHER, SAE FLAT - .3125”	3
15	58381	1/2” CUSHIONED CABLE CLAMP	1
16	10783	BOLT - .5” X 1”	1
17	15534	WASHER, SAE FLAT - .5”	1
18	54343	STUD, THRU BATTERY CABLE POSITIVE	1
19	54642	STUD, THRU BATTERY CABLE 1/2” NEGATIVE	1

E100-00130 - DEF TANK ELECTRICIAL WIRE HARNESS

ADD DIELECTRIC SILICONE GREASE TO ELECTRICIAL CONNECTORS

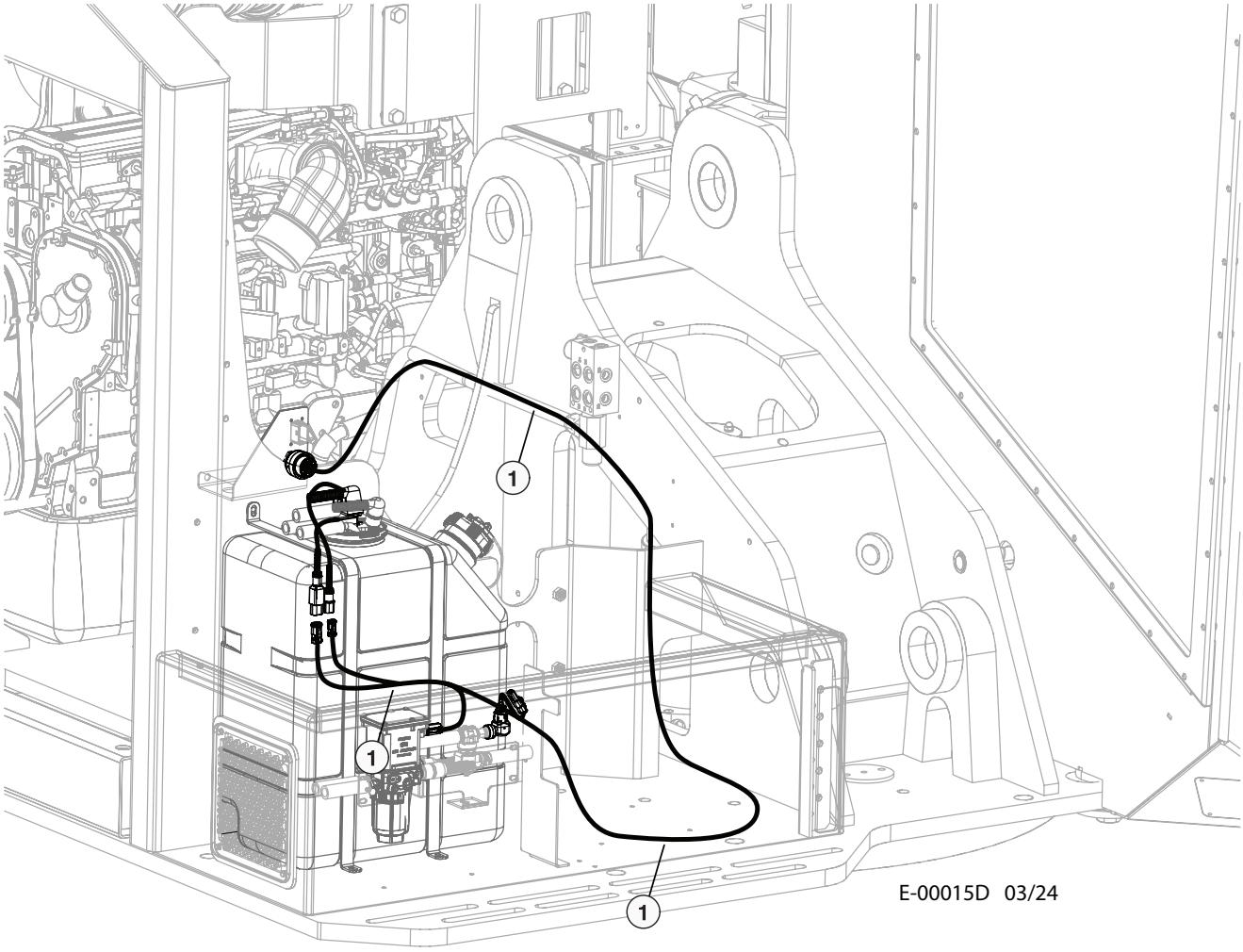

Item	Part #	Description	Qty.
1	60328	HARNESS, DEF TANK - CUMMINS STG5	1

E100-00140 - BATTERY CABLES

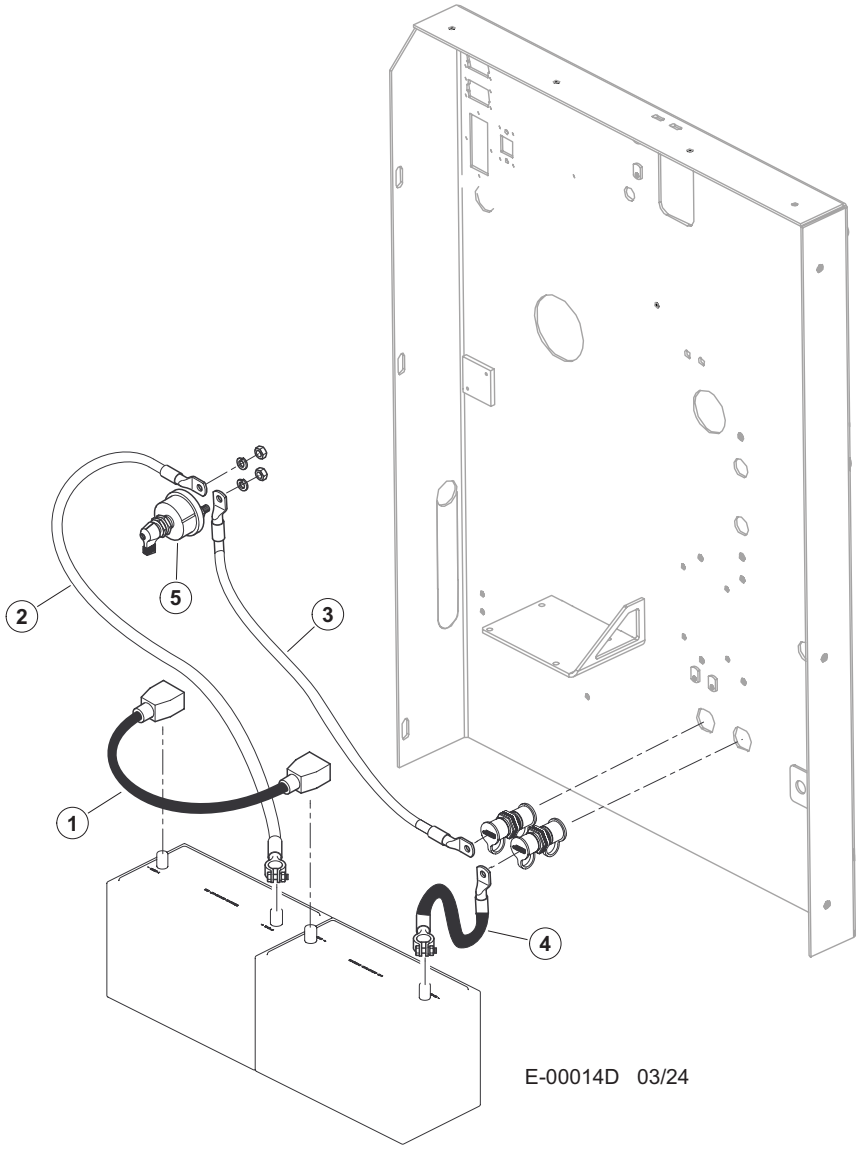

Item	Part #	Description	Qty.
1	24300	CABLE, BATTERY POS/NEG JUMPER	1
2	55334	CABLE, BATTERY - POSITIVE - “C” - 14”	1
3	55333	CABLE, BATTERY-POSITIVE- “C” - 10”	1
4	55337	CABLE, BATTERY - NEGATIVE - “C” - 9”	1
5	25200	SWITCH, MASTER SHUT-OFF(1/2” STUD)NEW	1

E100-00150 - CABIN EXTERIOR LIGHTS

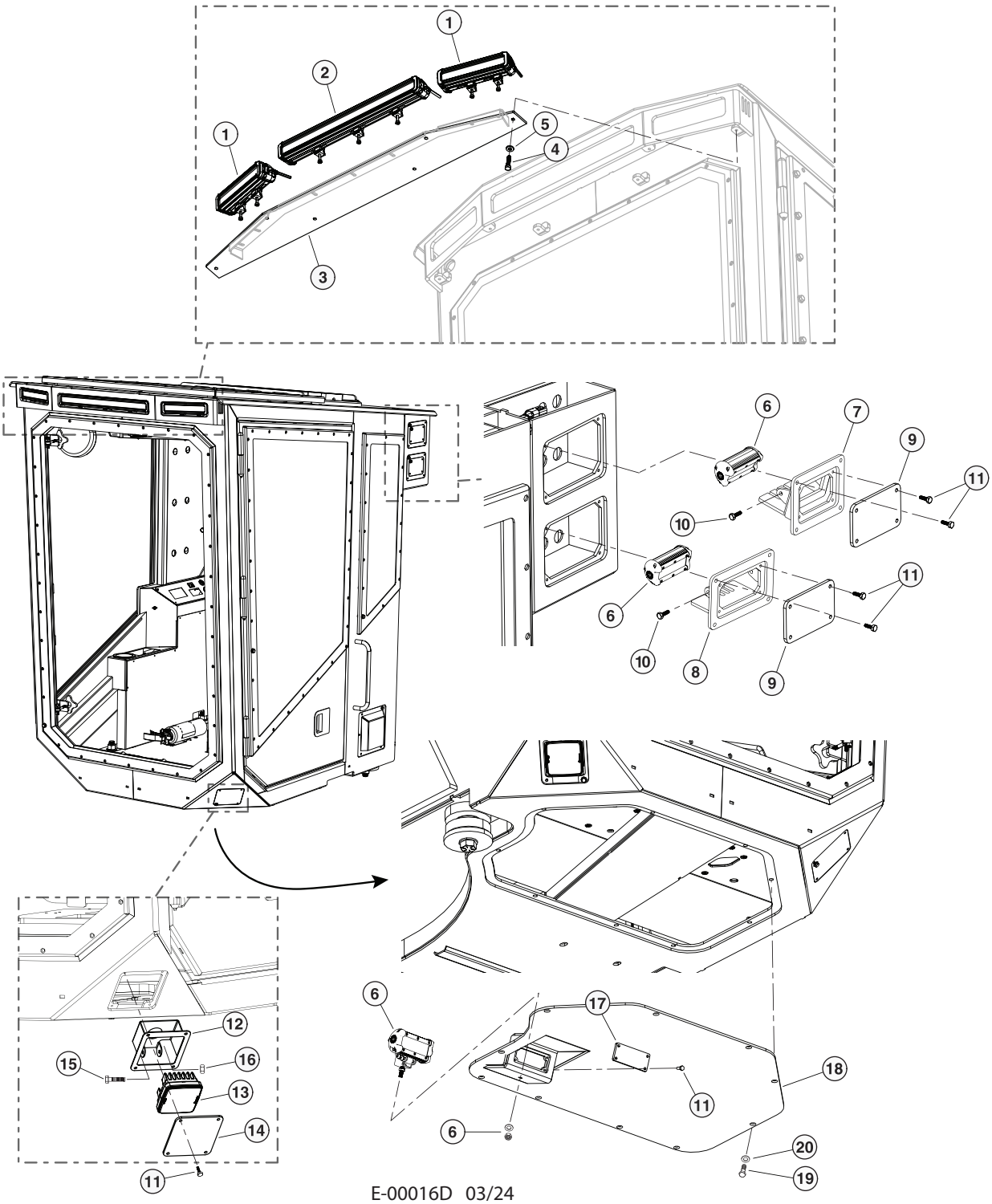

E-00016D 03/24

E100-00150 - CABIN EXTERIOR LIGHTS

Item	Part #	Description	Qty.
1	59042	LIGHT BAR - 6 LED	2
2	59047	LIGHT BAR - 15 LED	1
3	49184	WELDMENT, LIGHT BRACKET FRONT D-SERIES	1
4	10783	BOLT - .5” X 1.00”	4
5	15534	WASHER, SAE FLAT - .5”	4
6	59043	LIGHT BAR - 3LED (“D” GROTE)	3
7	49223	MOUNT, LIGHT - LED - (UPPER)	1
8	49382	MOUNT, LIGHT - LED - (LOWER)	1
9	49222	LEXON, LIGHT - CAB REAR D-SERIES	2
10	80517	BOLT - M10 X 20	4
11	59090	SCREW, 1/4-20x0.75, SHC, BUTTON HD	28
12	60885	BRACKET, LIGHT - CAB CORNER	2
13	59044	LIGHT CUBE - 6LED (“D” GROTE)	2
14	49224	LEXON, LIGHT - FRONT LOWER D-SERIES	2
15	15568	BOLT - .25” X 2”	1
16	10811	NUT, LOCK - .25”	1
17	60133	LEXAN, 3 LED LIGHT GUARD - D-MODEL	1
18	49226	COVER, MOUNT - 3 LED LIGHTS D-SERIES	1
19	15589	BOLT - .3125” X 1”	9
20	15559	WASHER, SAE FLAT - .3125”	9

E100-00160 - WORKING LIGHTS - FRONT DOOR

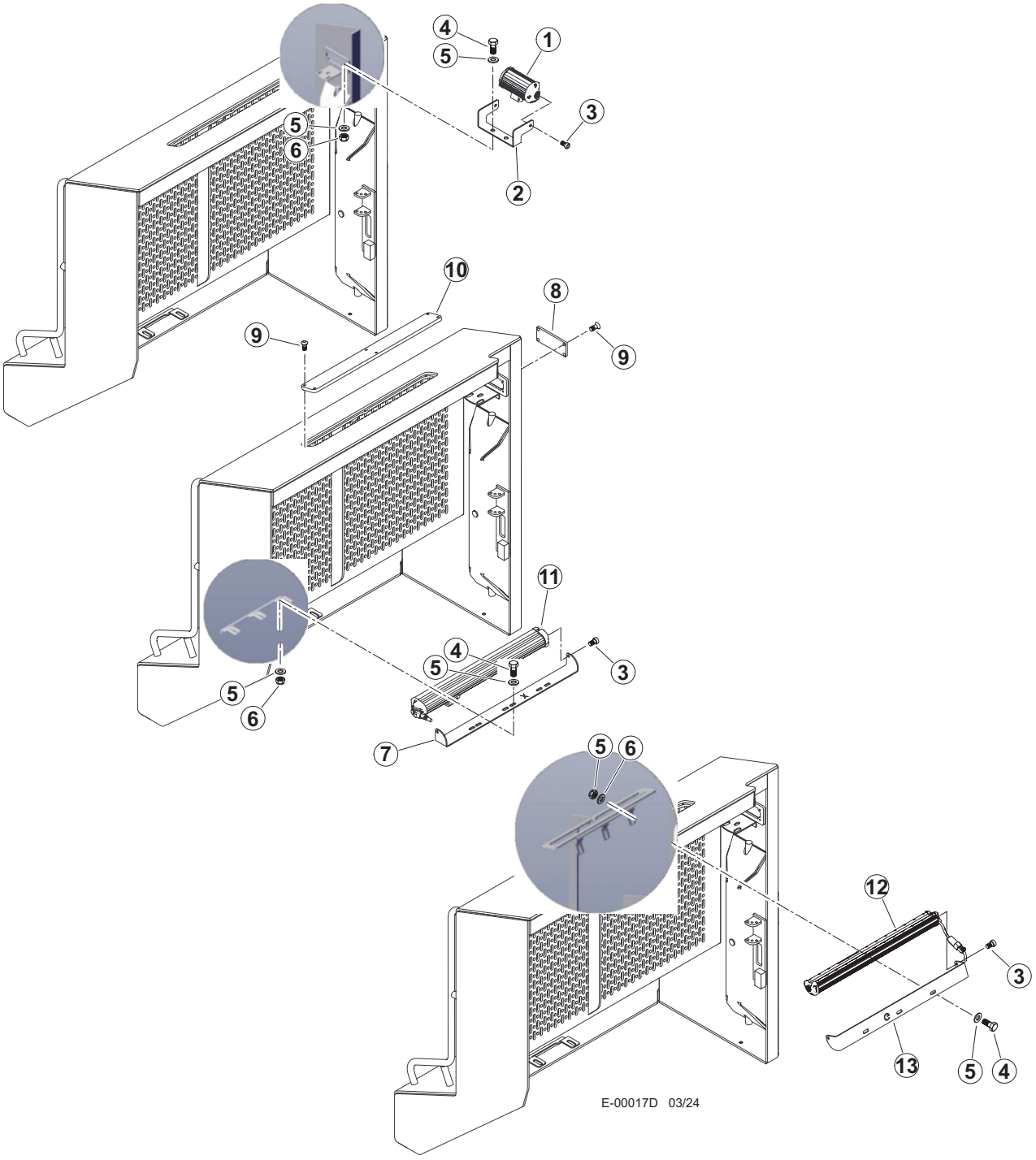

E100-00160 - WORKING LIGHTS - FRONT DOOR

Item	Part #	Description	Qty.
1	59043	LIGHT BAR - 3LED (“D” GROTE)	1
2	61055	PLATE, LED ADAPTER	1
3	80517	BOLT - M10 X 20	6
4	15589	BOLT - .3125” X 1”	8
5	10801	WASHER, FLAT - .3125”	16
6	10812	NUT, LOCK - .3125”	8
7	61553	MOUNT, LIGHT 15LED - GROTE	1
8	60133	LEXAN, 3 LED LIGHT GUARD	1
9	59090	SCREW, 1/4-20x0.75, SHC, BUTTON HD	10
10	49335	LEXAN, 15 LED LIGHT GUARD	1
11	59047	LIGHT BAR - 15 LED (VisionX)	1
12	59041	LIGHT BAR - 15LED (“D” GROTE)	1
13	61555	PLATE, LIGHT MT	1

E0410 - 2222300 - HORN AND BACK UP ALARM

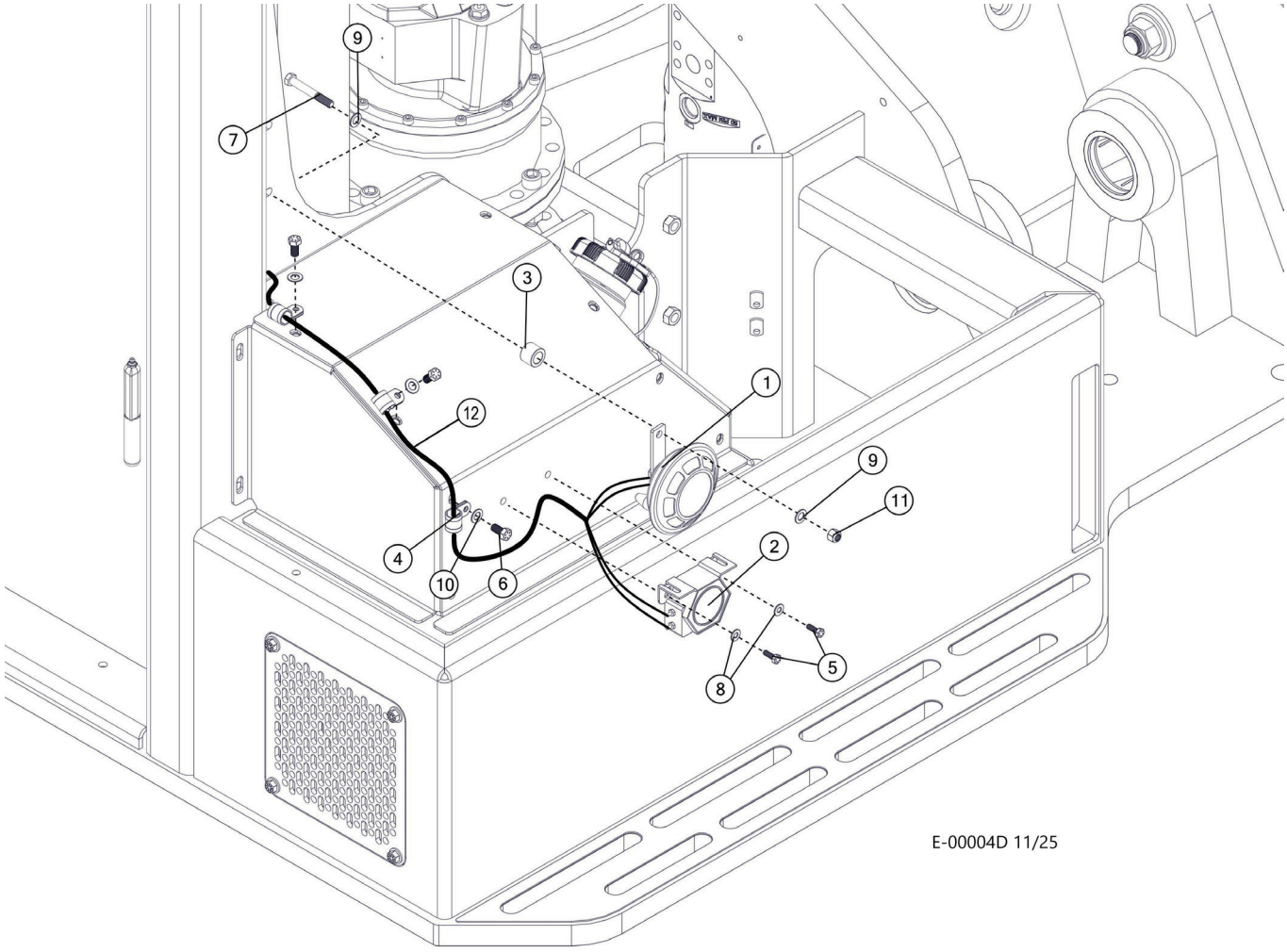

Item	Part #	Description	Qty.
1	55131	HORN, ELECTRIC - 24V	1
2	53193	SIREN, BACKUP - 24V	1
3	19219	SPACER	1
4	59128	CABLE CLAMP, CUSHIONED, 1/2” (.406”)	3
5	15604	BOLT - .25” X .75”	2
6	15542	BOLT - .375” X .75”	3
7	23265	BOLT - .375” X 2.25”	1
8	10800	WASHER, FLAT - .25”	2
9	10802	WASHER, FLAT - .375”	2
10	15528	WASHER, SAE FLAT - .375”	3
11	10813	NUT, LOCK - .375”	1
12	58995	HARNESS, HORN AND BACKUP CE	1

E0410 - 2222300 - HORN AND BACK UP ALARM

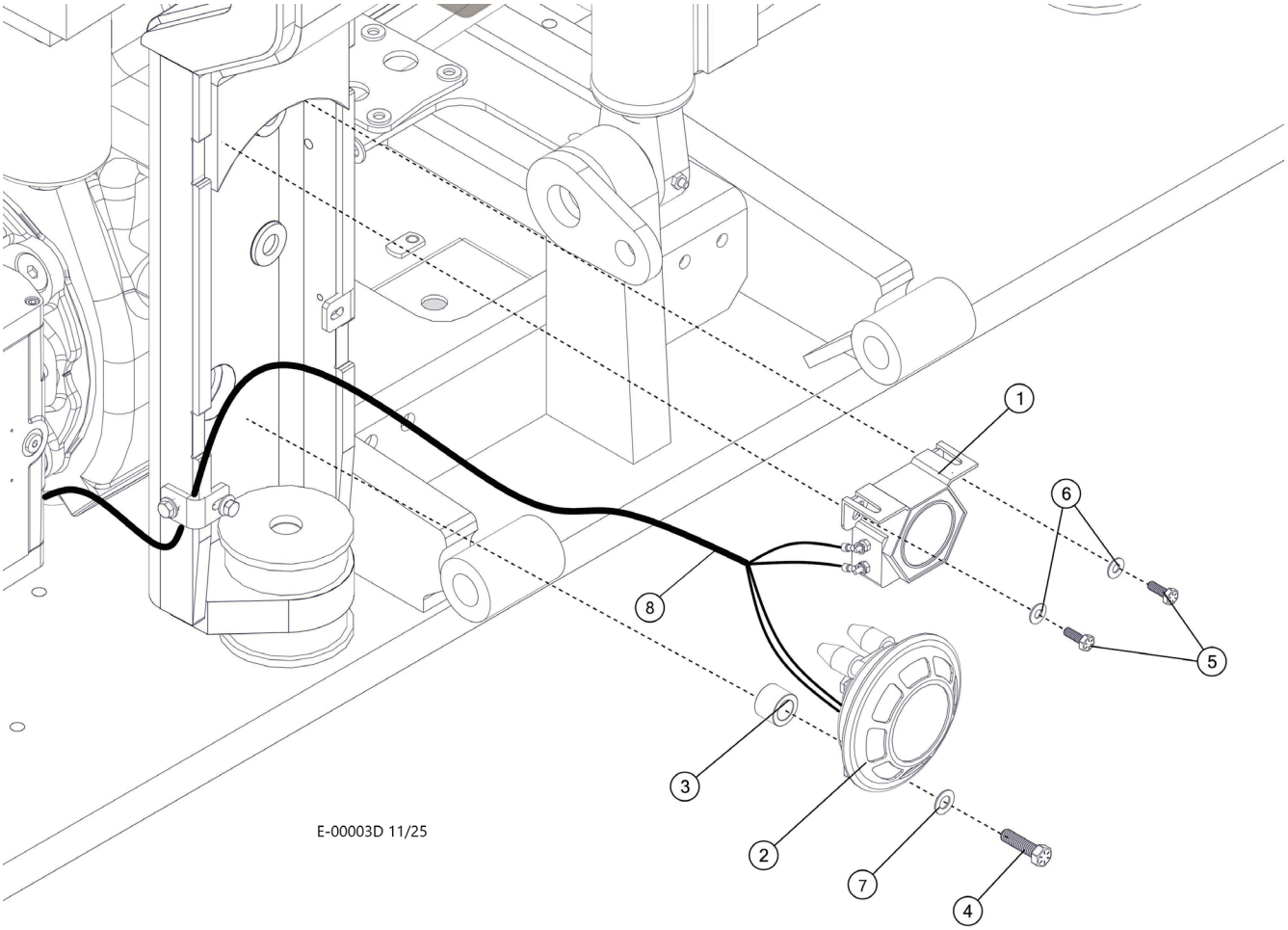

Item	Part #	Description	Qty.
1	55131	HORN, ELECTRIC - 24V	1
2	53193	SIREN, BACKUP - 24V	1
3	19219	SPACER	1
4	10731	BOLT - .375” X 1.5”	1
5	15604	BOLT, .25”X.75”	2
6	10757	WASHER, SAE FLAT - .25”	2
7	10802	WASHER, FLAT - .375”	1
8	58995	HARNESS, HORN AND BACKUP CE	1

E100-00180 - CABIN ACCESSORIES-CAMERA

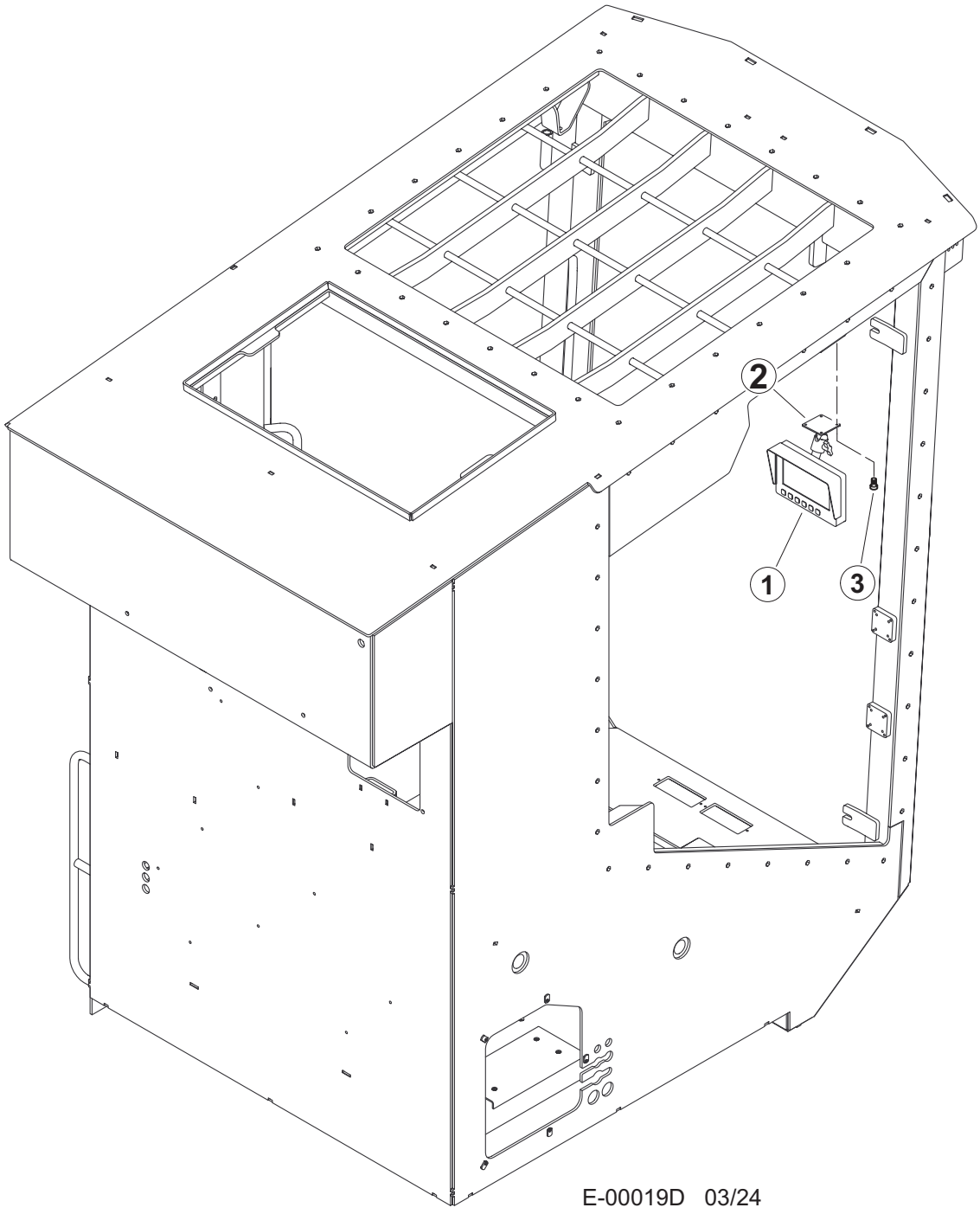

E-00019D 03/24

Item	Part #	Description	Qty.
	52557 (KIT)	CAMERA, REARVIEW	1
1	53780	7” LCD MONITOR	1
2	55747	MOUNT, CAMERA MONITOR	1
3	59089	SCREW, 10-24 X 3/4 SHC, BUTTON HD	4

E100-00190 - COVER, CAMERA INSTALL

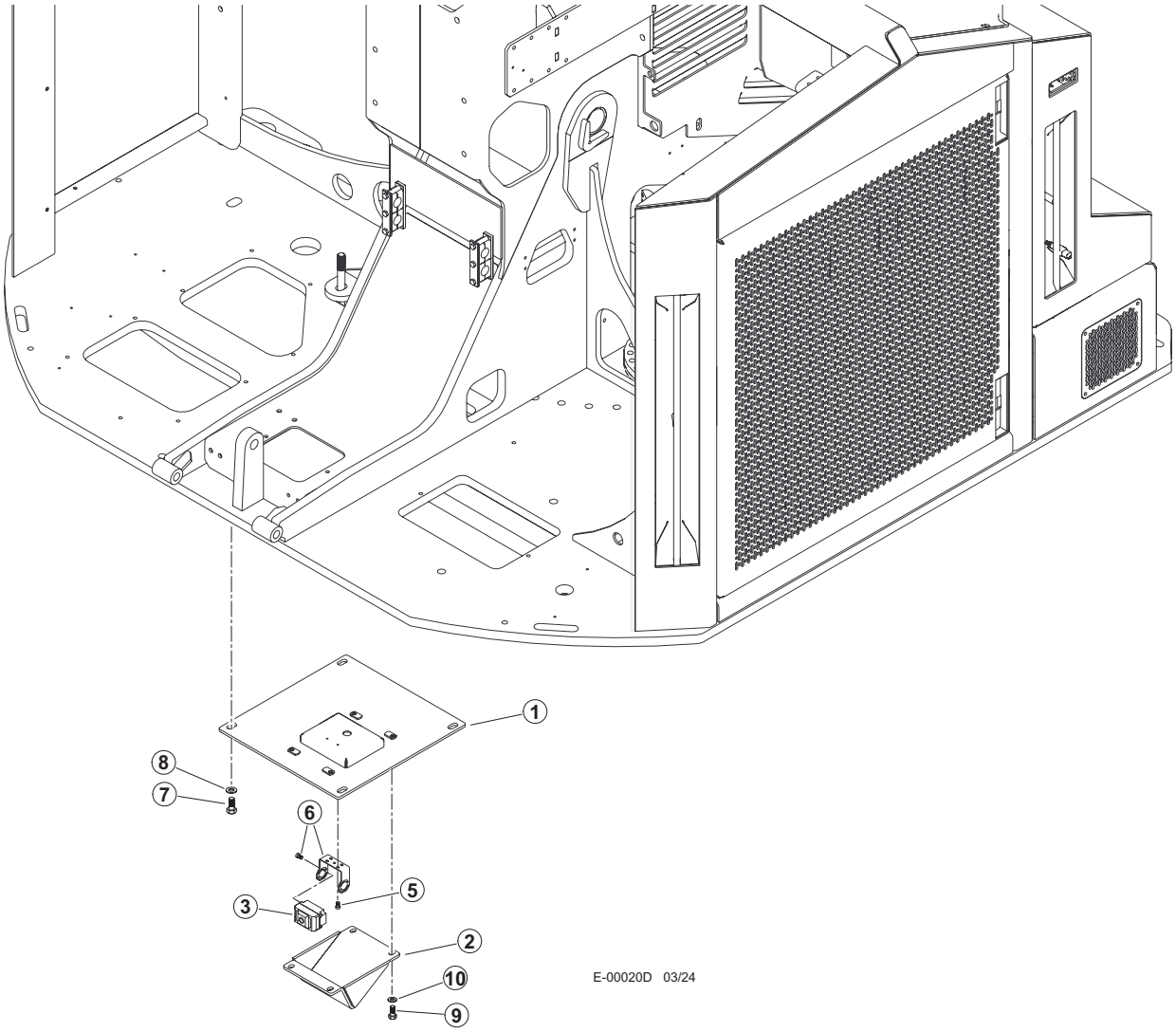

Item	Part #	Description	Qty.
1	60416	BOX, CAMERA - TOP	1
2	60150	CAMERA GUARD	1
3	VCMS20B	CAMERA	1
4	58089	SCREW, 10-24 X 3/4 SHC, BUTTON HD	2
5	72704	CAMERA MOUNT	1
6	10783	BOLT - .5” X 1.00”	4
7	15534	WASHER, SAE FLAT - .5”	4
8	15542	BOLT - .375”	4
9	15528	WASHER, SAE FLAT - .375”	4
*	47995	WELDMENT, D UPPER TURN - 755D	1

E100-00200 - COVER, CAMERA NON-SELECT

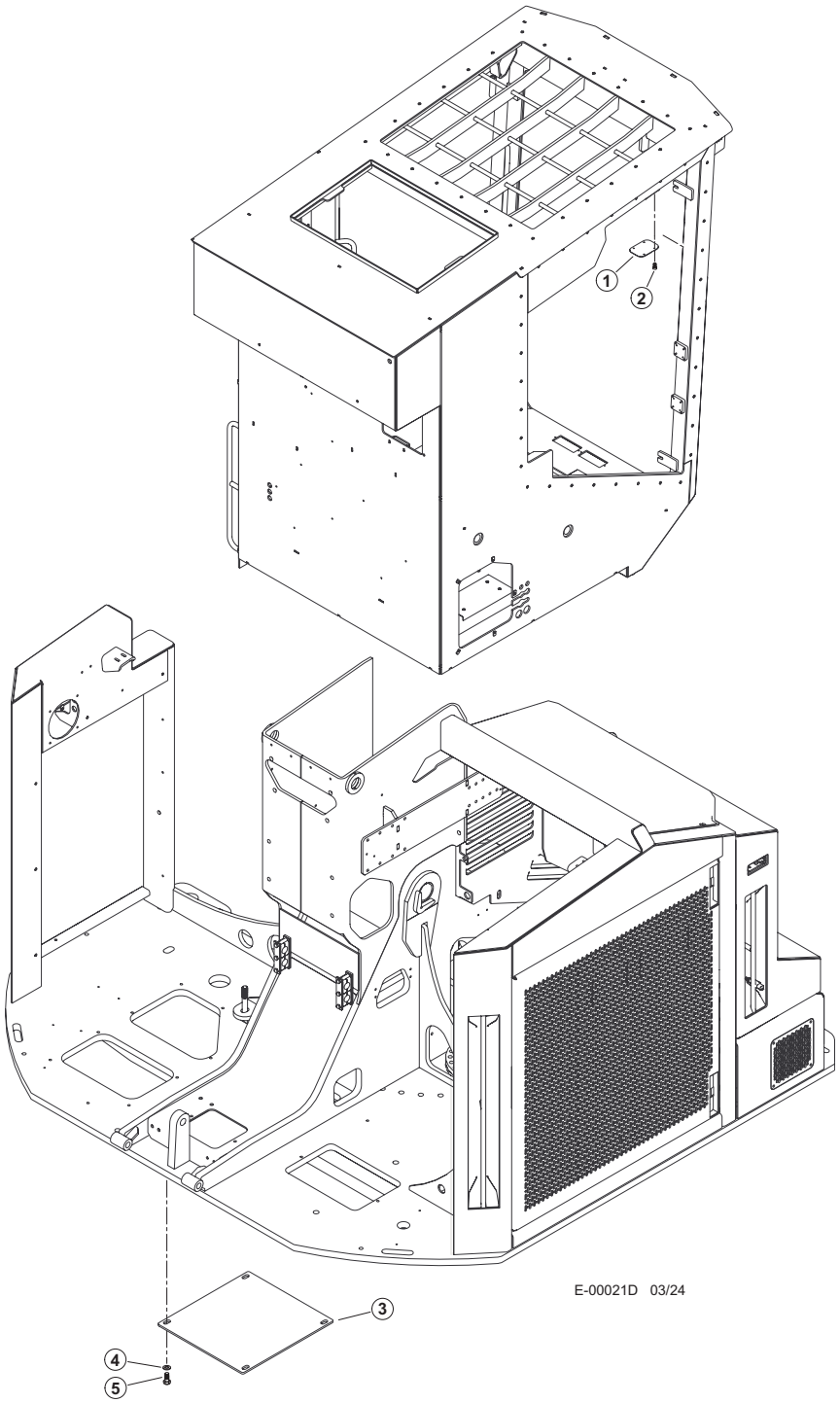

Item	Part #	Description	Qty.
1	61030	PLATE, D-CAB CAMERA COVER	1
2	59089	SCREW, 10-24 X 3/4 SHC, BUTTON HD	4
3	46466	COVER, BOTTOM OIL PAN- REAR	1
4	10783	BOLT - .5” X 1.00”	4
5	15534	WASHER, SAE FLAT - .5”	4

E100-00210 - CONTROL HARNESS, PROCESSOR, U

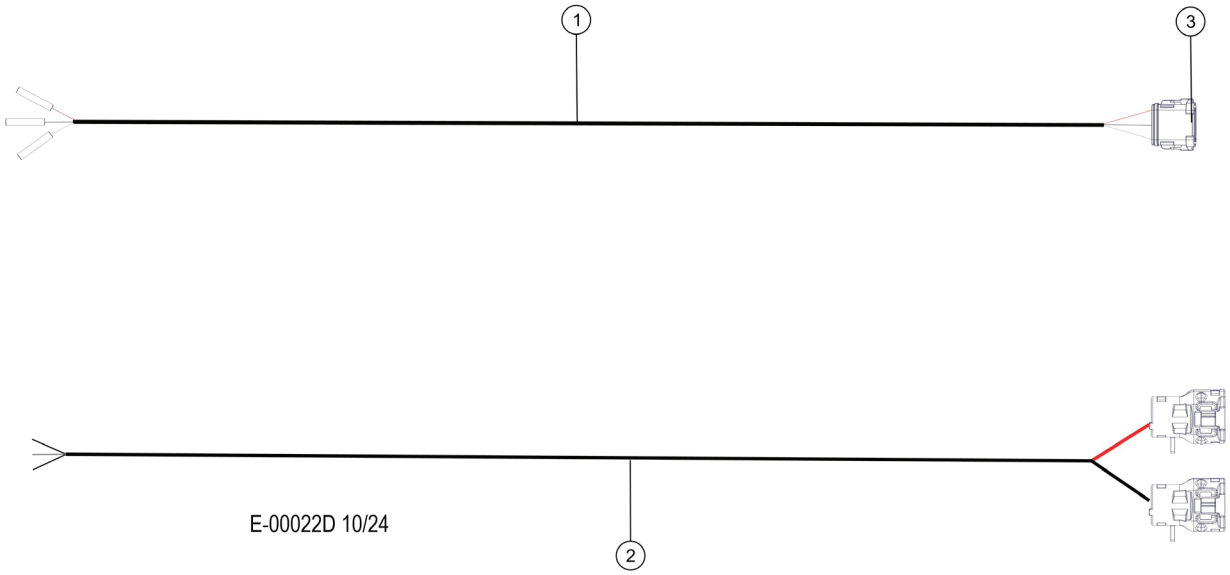

Item	Part #	Description	Qty.
1	52644	HARNESS, POWER - PROCESSOR	1
2	53863	HARNESS, PROCESSER - PUMP 1/PUMP 2	1
3	53260	DEUTSCH 8 CONTACT SOCKET KIT	1

E100-00215 - LEFT & RIGHT CONTROL PODS

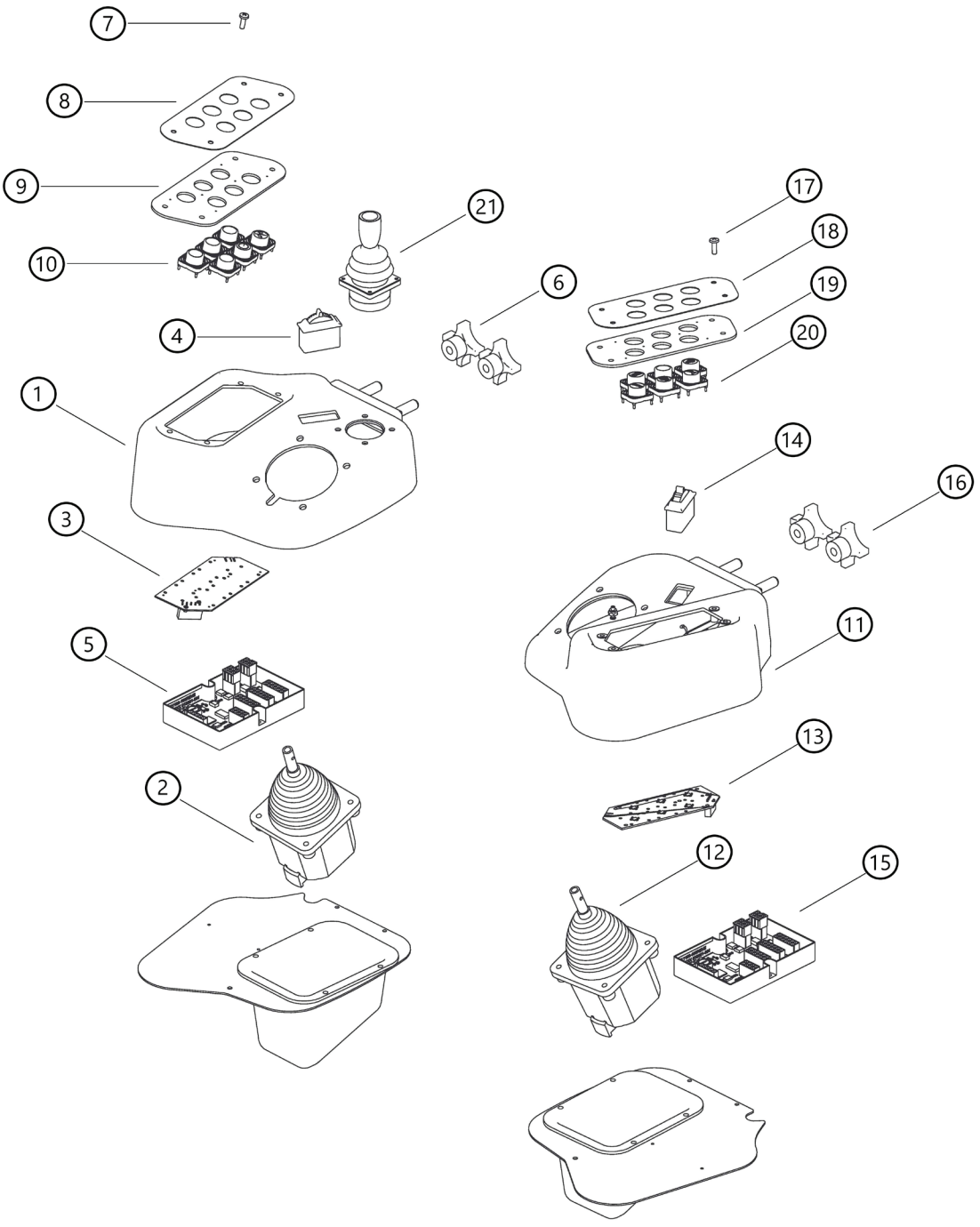

E-00027D 02/26

E100-00215 - LEFT & RIGHT CONTROL PODS

Item	Part #	Description	Qty.
1	55422	POD, JOYSTICK - RH (C&D RH TRACK)	1
2	54126	JOYSTICK, MDL (P&G) CAN RIGHT	1
3	55666	PANEL, 6 SWITCH - POD RH (SWITCHES)	1
4	55703	POT, DETENTED - THUMB WHEEL - C-SERIES	1
5	55707	BOARD, CAN DRIVER - RH (PLASTIC POD)	1
6	CALL	KNOB (DK-57)	2
7	CALL	SCREW, 8-32-1/2"	1
8	CALL	COVER, SWITCHES (M1335-227)	1
9	CALL	SPACER, SWITCHES	1
10	CALL	BUTTON, BLANK (M13361)	1
*	CALL	BUTTON, DISC SAW (M13361-009)	1
*	CALL	BUTTON, MOTOR SHIFT (M13361-10)	1
11	55417	POD, JOYSTICK - LH (C&D SERIES WHEEL/TRA	1
12	54125	JOYSTICK, MDL - CAN LEFT	1
13	55667	PANEL, 6 SWITCH - POD LH (SWITCHES)	1
14	55703	POT, DETENTED - THUMB WHEEL - C-SERIES	1
15	55708	BOARD, CAN DRIVER - LH (PLASTIC POD)	1
16	CALL	KNOB (DK-57)	2
17	CALL	SCREW, 8-32-1/2"	1
18	CALL	COVER, SWITCHES (M1335-227)	1
19	CALL	SPACER, SWITCHES	1
20	CALL	BUTTON, BLANK (M13361)	1
*	CALL	BUTTON, ARMING (M13361-004)	1
*	CALL	BUTTON, CHARGE HEATER (M13361-005)	1
*	CALL	BUTTON, PARKING BRAKE (M13361-003)	1
*	CALL	BUTTON, HORN (M13361-006)	1
*	CALL	BUTTON, AUTO THROTTLE (M13361-007)	1
21	57423	JOYSTICK, STEER - PLASTIC POD - CURRENT	1

HYDRAULIC SYSTEM - (H)

H200-00000 - MAIN BOOM CYLINDER PIPING - VALVE TO BULKHEAD(W450/W300 VALVE)

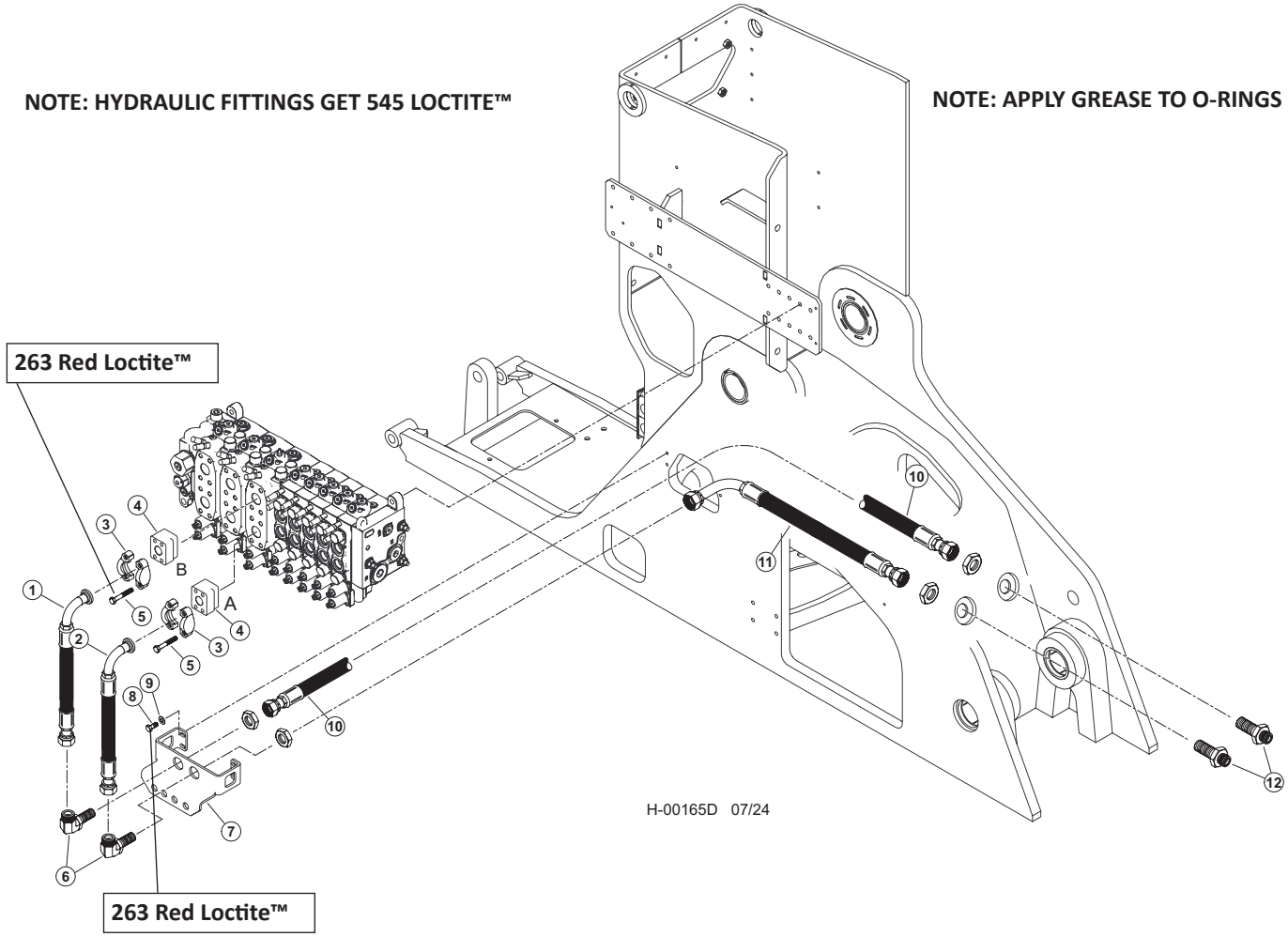

Item	Part #	Description	Qty.
1	65482 - (65799 - KIT)	HOSE, HYD, 787TC36 16-16OS-20PH9-SW - (BOOM “B”)	1
2	65459 - (65799 - KIT)	HOSE, HYD, 787TC32 16-16OS-20PH9-SW - (BOOM “A”)	1
3	15111	KIT, SPLIT FLANGE CODE 61 1 INCH	2
4	65458	ANCHOR-ASX-20GP STANDOFF	2
5	55664	BOLT, ALLEN HEAD - 10MM-1.5P X 80MM **263 RED LOCTITE™**	8
6	53680	FITTING, BULKHEAD UNION ELBOW 16 WELO-WN	4
7	60559	BULHEAD, FRONT - TM	2
8	10402	BOLT - .375” X 1.25” **263 RED LOCTITE™**	2
9	15528	WASHER, SAE FLAT - .375”	2
10	65803 - (65799 - KIT)	HOSE, HYD, 787TC43 16-16OS-16OS	12
		(MAIN BOOM CYLINDER BASE END BULKHEAD TO BULKHEAD PLATE)	1
11	65804 - (65799 - KIT)	HOSE, HYD, 787TC30 16-16OS-16O9L	
		(MAIN BOOM CYLINDER ROD END BULKHEAD TO BULKHEAD PLATE)	1
12	54316	ELBOW, BULKHEAD UNION 45DEG #16	2

H200-00010 - HOC MANIFOLD & CASE MANIFOLD PIPING - (WS450/WS300 VALVE)

NOTE: HYDRAULIC FITTINGS GET 545 LOCTITE™

NOTE: APPLY GREASE TO O-RINGS

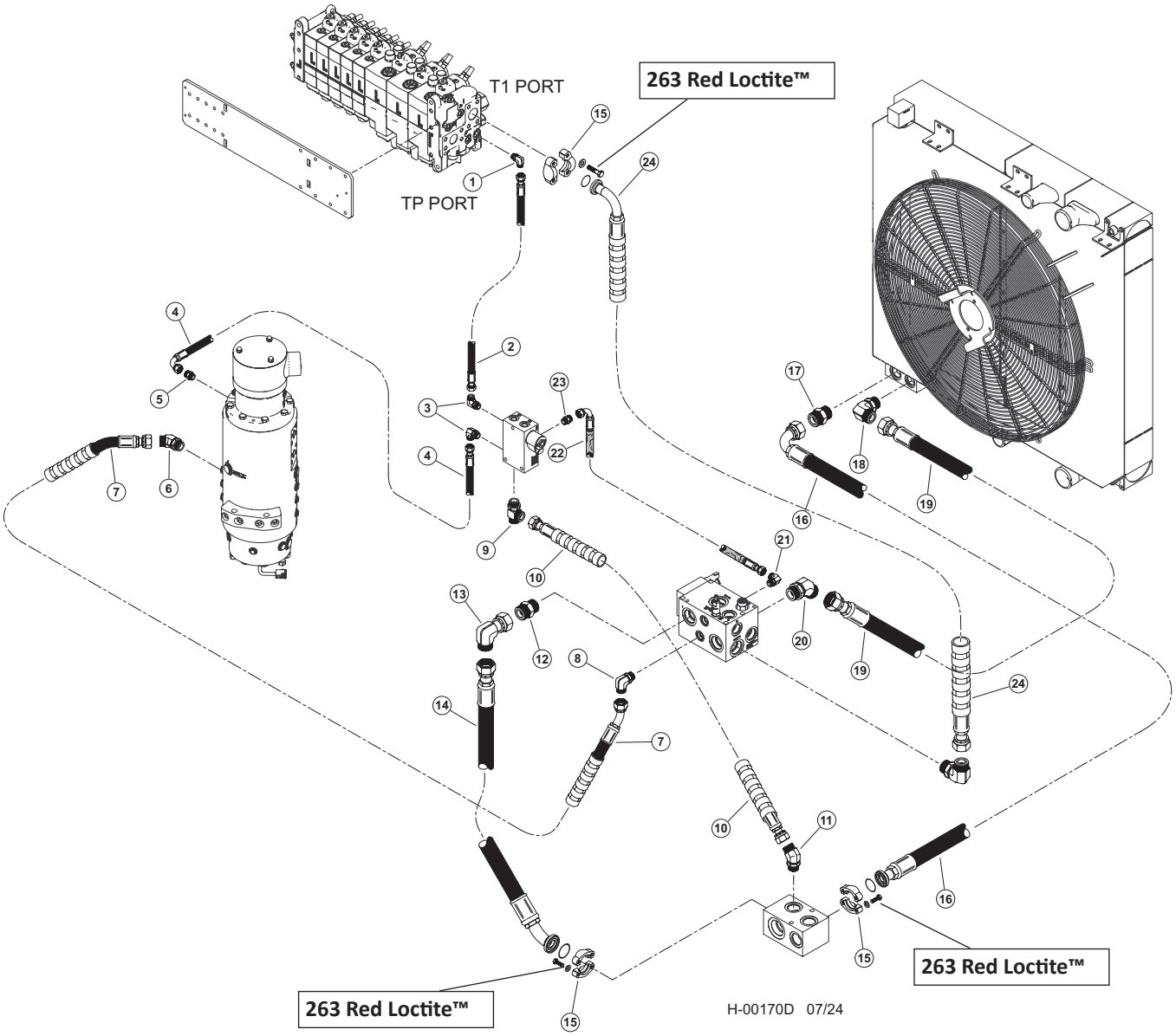

H200-00010 - HOC MANIFOLD & CASE MANIFOLD PIPING - (WS450/WS300 VALVE)

Item	Part #	Description	Qty.
1	16360 - (KIT - 65975)	ELBOW, 90 - FF1868T-0808S	1
2	65816 - (KIT - 65812)	HOSE, HYD, 187TC38 08-08OS-08OS	1
		(MAIN VALVE CASE DRAIN TO CASE MANIFOLD)	
3	16296	ELBOW, 90 - FF1868T-0606S	2
4	65794 - (65792 -KIT)	HOSE, HYD, 387TC27 06-06OS-06J9	1
		(ROTARY MANIFOLD TO BR CASE MANIFOLD)	
5	15487	CONNECTOR, STR - 6400-6-4	1
6	19127	ELBOW, 45 - FF2068T-1212S	1
7	65789 - (65792 - (KIT)	HOSE, HYD, 187TC30 12-12OS-12O4-SW	1
		(ROTARY MANIFOLD TO HOC MANIFOLD)	
8	19128	ELBOW, 90 - FF1868T-1216S	1
9	55379	FITTING, STRAIGHT - 16 R5OX-S	1
10	65790 - (65787 - (KIT)	HOSE, HYD, 187TC43 16-16JS-16JS-SW	1
		(RETURN MANIFOLD TO CASE MANIFOLD)	
11	15473	ELBOW, 45 - 6802-16	1
12	22319	CONNECTOR, STR 24F5OX-S THRML B-PASS GT	1
13	54714	ELBOW, 90 SWIVEL 24C6X-S (24 JICMF)	1
14	65788 - (65787 - (KIT)	HOSE, HYD, 187TC15 24-24JS-24PA4	1
		(HOC BYPASS MANIFOD TO RETURN MANIFOLD)	
15	15186	KIT, SPLIT FLANGE - 1.5” (CODE 61) **263 RED LOCTITE™**	3
16	65791 - (65787 - (KIT)	HOSE, HYD, 187TC51 24-24O9-24PA	1
		(OIL COOLER RETURN TO RETURN MANIFOLD)	
17	22448	CONNECTOR, STR - 848-TTO-24X24	1
18	59007	FITTING, 24-C5OLO-S	1
19	65828 - (65787 - (KIT)	HOSE, HYD, 187TC30.5 24-24OS-24OS	1
		(COOLER RETURN TO HOC MANIFOLD)	
20	24257	ELBOW, 45 - FF2068T-2424S	1
21	20031	ELBOW, 90 - 6-8 C5OLO-S	1
22	65829 - (65787 - (KIT)	HOSE, HYD, 387TC41 06-06OS-06O9-W	1
		(CASE MANIFOLD TO HOC MANIFOLD)	
23	22901	CONNECTOR, STR - 6-8 F5OLO-S	1
24	65815 - (KIT - 65812)	HOSE, HYD, 187TC39 24-24JS-24PA9-SW	1

H200-00020 - IMPLEMENT PUMP PRESSURE & LOAD SENSE PIPING (WS450/WS300 VALVE)

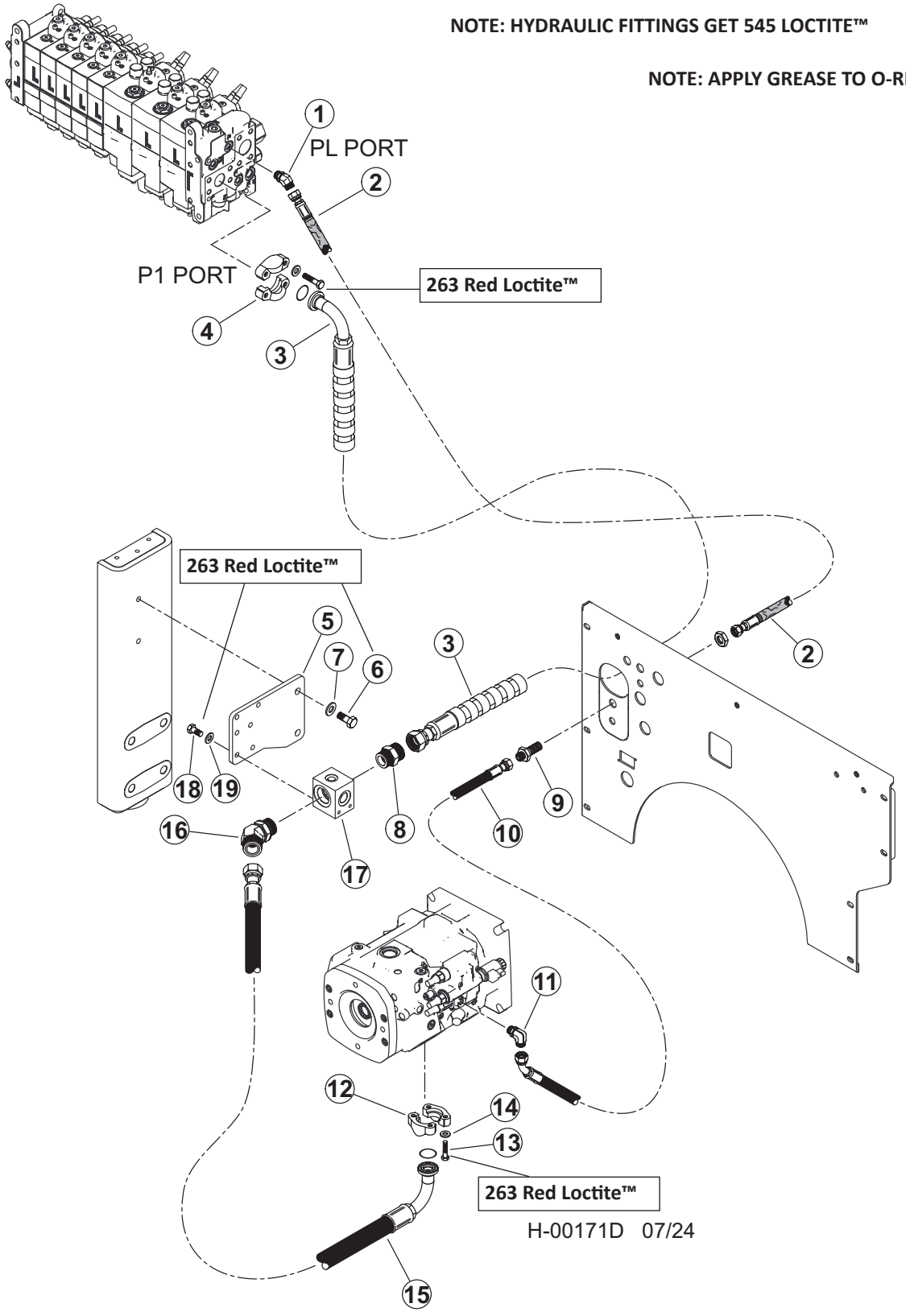

H200-00020 - IMPLEMENT PUMP PRESSURE & LOAD SENSE PIPING (WS450/WS300 VALVE)

Item	Part #	Description	Qty.
1	23015	ELBOW, 45 - 6 V5OLO-S	1
2	65940 - (KIT - 65868)	HOSE, HYD, 787TC68 06-06OS-06OS-W **(IMP PUMP LOAD SENSE)**	1
3	65455 - (KIT - 65454)	HOSE, HYD, 787TC67 20-20OS-20PH9-SW **(IMP PUMP PRESSURE TO VALVE)**	1
4	65457	20SFXO & M12 SPLIT FLANGE (CODE 62) **263 RED LOCTITE™**	1
5	60444	MOUNT, MANIFOLD	1
6	50100	BOLT - .5" X 1.25" **263 RED LOCTITE™**	2
7	15534	WASHER, SAE FLAT - .5"	2
8	17344	CONNECTOR, STR - FF1852T-2020S	1
9	50420	CONNECTOR, STR BULKHEAD - 832-TT-06	1
10	65939 - (65868 - KIT)	HOSE, HYD, 787TC37 06-06OS-06O4 **(LOAD SENSE - IMPLEMENT PUMP TO BULKHEAD)**	1
11	16296	ELBOW, 90 - FF1868T-0606S	1
12	15114	KIT, SPLIT FLANGE - 1.25" (CODE 62)	1
13	10736	BOLT - .5" X 2" **263 RED LOCTITE™**	4
14	10710	WASHER, LOCK - .5"	4
15	58027 - (65868 - KIT)	HOSE, HYD, IMP PRESS 40/D-SERIES **(IMPLEMENT PUMP PRESSURE)**	
16	17056	ELBOW, 45 - FF2068T-2020S	1
17	51450	MANIFOLD, RETURN CHECK	1
18	11707	BOLT - .375" X 1" **263 RED LOCTITE™**	2
19	15528	WASHER, SAE FLAT - .375"	2

H100-00040 - DRIVE PUMP UPPER PIPING - (COMMON)

NOTE: HYDRAULIC FITTINGS GET 545 LOCTITE™

NOTE: APPLY GREASE TO O-RINGS

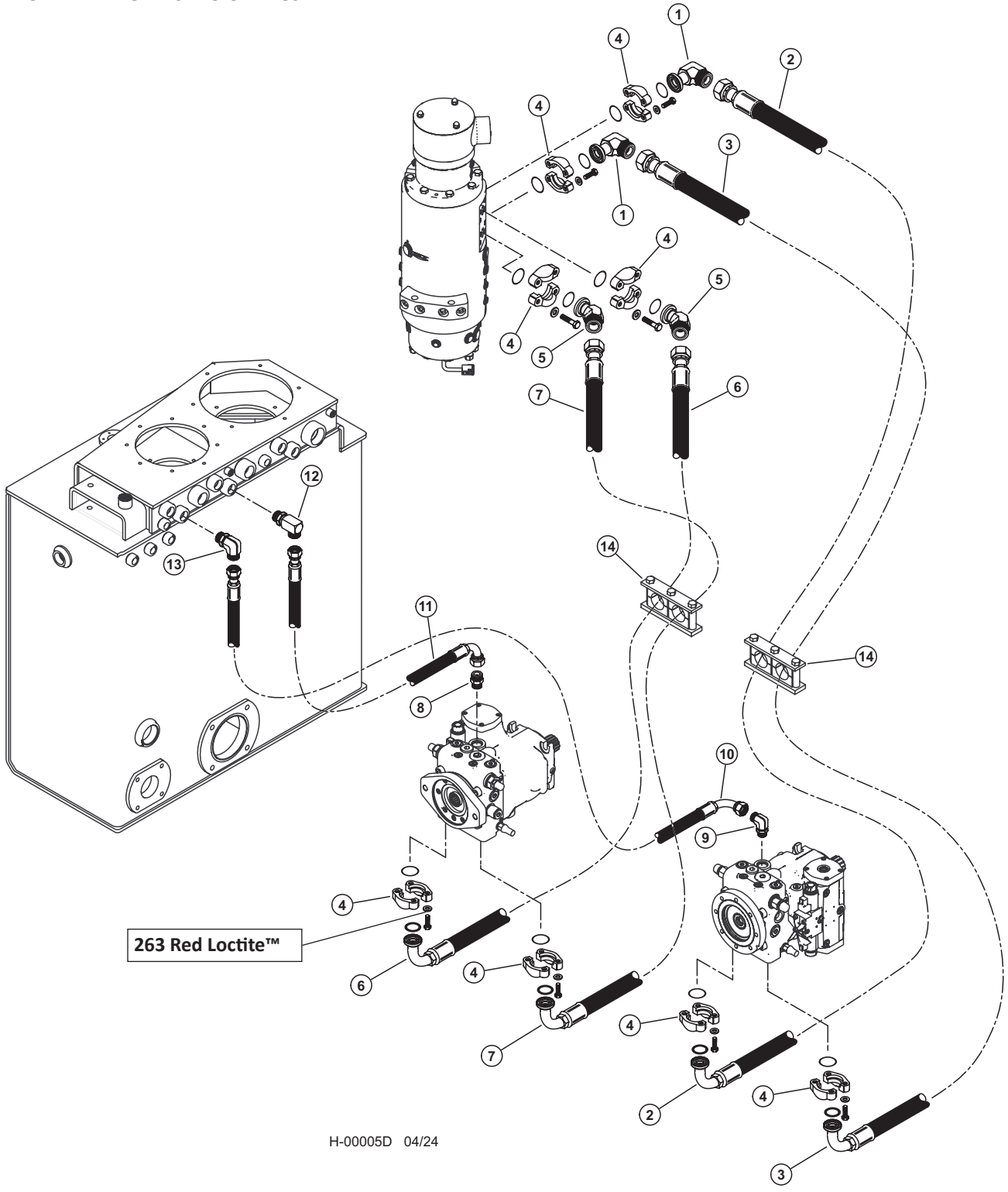

H100-00040 - DRIVE PUMP UPPER PIPING - (COMMON)

Item	Part #	Description	Qty.
1	20030	ADAPTER, 90 FLANGE - 16 LOEQ2-S (C62)	2
2	65785 - (65782 - KIT)	HOSE, HYD, 797TC74 16-16OS-16PH9	1
		(#10 PORT ON RM TO RIGHT DRIVE - R)	
3	65786 - (65782 - KIT)	HOSE, HYD, 797TC76 16-16OS-16PH9	1
		(#12 PORT ON RM TO RIGHT DRIVE - L)	
4	15113	KIT, SPLIT FLANGE - 1” (CODE 62) **263 RED LOCTITE™**	8
5	57459	ADAPTOR, FLANGE 45DEG ORFS CODE 62	2
6	65783 - (65782 - KIT)	HOSE, HYD, 797TC58 16-16OS-16PH9	1
		(#11 PORT ON RM TO LEFT DRIVE - L)	
7	65784 - (65782 - KIT)	HOSE, HYD, 797TC60 16-16OS-16PH9	1
		(#9 PORT ON RM TO LEFT DRIVE - R)	
8	15152	CONNECTOR, STR - FF1852T-1212S	1
9	17688	ELBOW, 90 - FF1868T-1212S	1
10	65822 - (65952 - KIT)	HOSE, HYD, 187TC51.5 12-12OS-12O9	1
		(RIGHT DRIVE PUMP CASE DRAIN TO HYD TANK)	
11	65820 - (65852 - KIT)	HOSE, HYD, 187TC33 12-12OS-12O9	1
		(LEFT DRIVE PUMP CASE DRAIN TO HYD TANK)	
12	57444	FITTING, 12 CC5OLO-S	1
13	11306	ELBOW, 90 12 C5OX-S	1
14	12270	CLAMP, VERMATIC (15-SB-2-R-1.5) DUAL	2

H100-00050 - TRACK DRIVE BRAKE, SHIFT & CASE DRAIN UPPER PIPING - (COMMON)

NOTE: HYDRAULIC FITTINGS GET 545 LOCTITE™

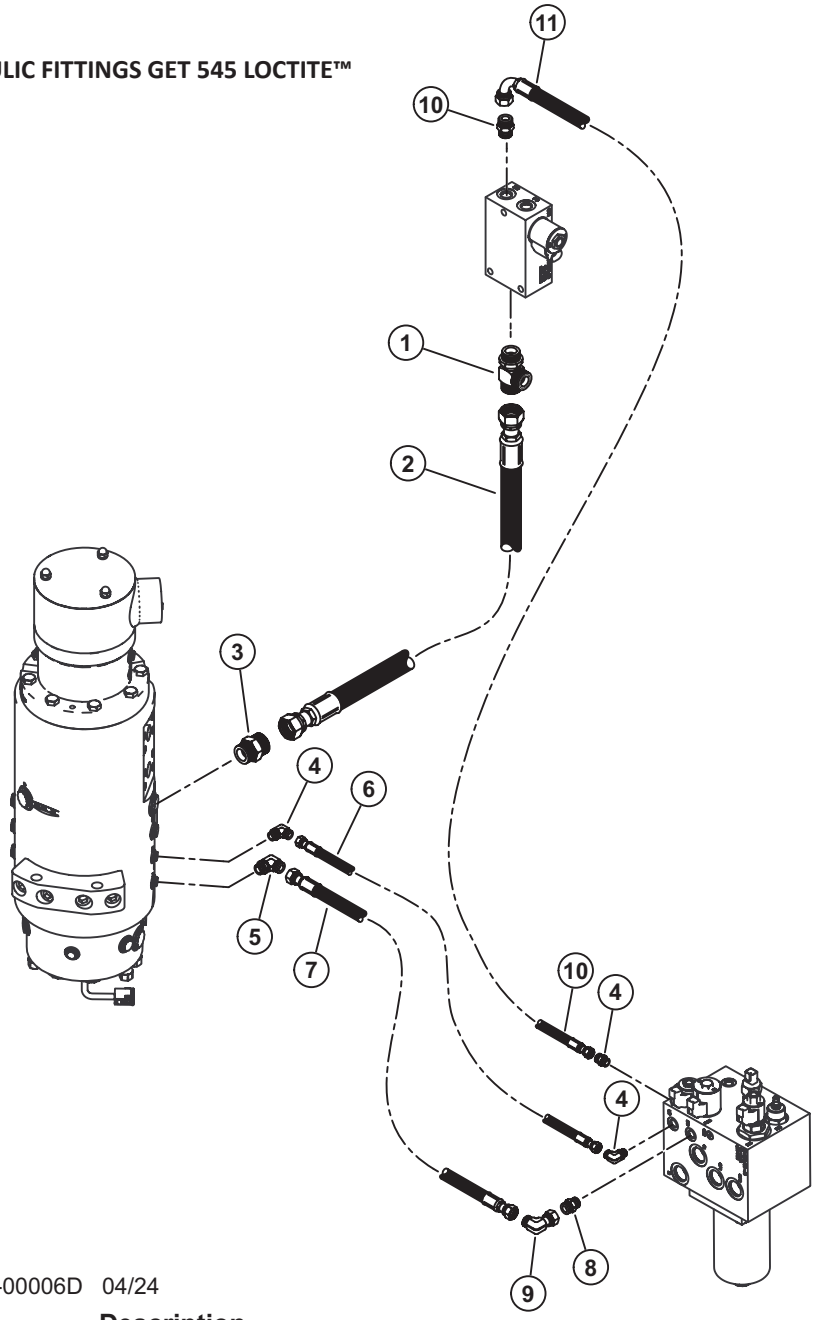

H-00006D 04/24

Item	Part #	Description	Qty.
1	55379	FITTING, STRAIGHT - 16 R5OX-S	1
2	65793 - (65792 - KIT)	HOSE, HYD, 187TC18 16-16JS-16J4	1
		(CASE MANIFOLD TO ROTARY MANIFOLD)	
3	15496	CONNECTOR, STR - 6400-16-12	1
4	15133	ELBOW, 90 - FF1868T-0406S	2
5	16296	ELBOW, 90 - FF1868T-0606S	1
6	65795 - (65792 - KIT)	HOSE, HYD, 387TC90 04-04OS-04OS-W	1
		(CHARGE MANIFOLD MOTOR SHIFT PORT TO ROTARY MANIFOLD)	
7	65796 - (65792 - KIT)	HOSE, HYD, 387TC91 06-06OS-06OS-W	1
		(CHARGE MANIFOLD PARKING BRAKE PORT TO ROTARY MANIFOLD)	
8	18034	CONNECTOR, STR - FF1852T-0606S	1
9	20035	ELBOW, 90 SWIVEL - 6 C6LO-S	1
10	65827 - (65952 - KIT)	HOSE, HYD, 387TC109 04-04OS-04O9	1
		(CHARGE MANIFOLD TO BRAKE SOLENOID)	

H100-00060 - COOLING FAN MOTOR PIPING - (COMMON)

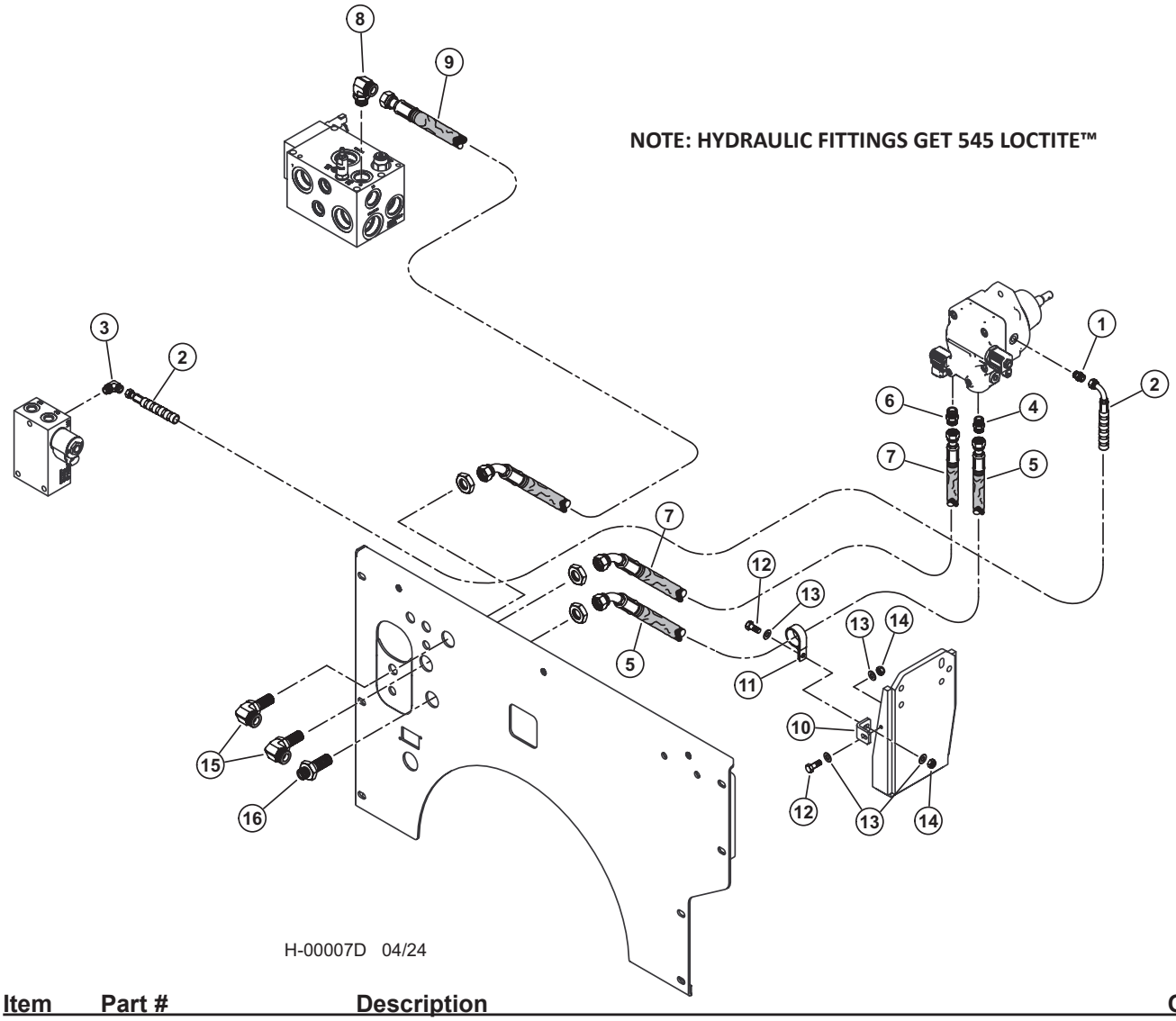

Item	Part #	Description	Qty.
1	55379	CONNECTOR, STR - FF1852T-0606S	1
2	65830 - (65787 - KIT)	HOSE, HYD, 387TC42 06-06OS-06O9-SW	1
		(FAN MOTOR CASE TO CASE MANIFOLD)	
3	20031	ELBOW, 90 - 6-8 C5OLO-S	1
4	15152	CONNECTOR, STR - FF1852T-1212S	1
5	65937 - (65787 - KIT)	HOSE, HYD, 487TC69 12-12OS-12J4-W	1
		(FAN MOTOR PRESSURE - CHARGE BH TO FAN MOTOR)	
6	15495	CONNECTOR, STR - 12-16 F5OX-S	1
7	65936 - (65787 - KIT)	HOSE, HYD, 187TC72 12-12JS-12J4-W	1
		(FAN MOTOR RETURN - CHARGE BH TO FAN MOTOR)	
8	19128	ELBOW, 90 - FF1868T-1216S	1
9	65935 - (65787 - KIT)	HOSE, HYD, 187TC40 12-12OS-12J4-SW	1
		(T CHARGE BH TO HOC BYPASS MANIFOLD)	
10	46421	BRACKET, COOLER LINE SUPPORT	1
11	59105	CABLE CLAMP, CUSHIONED, 1_1/2" DIA	1
12	18309	BOLT - .25" X 1.25"	2
13	10757	WASHER, SAE FLAT - .25"	4
14	10811	NUT, LOCK - .25"	2
15	54704	ELBOW, 90 BULK 12 WETX-WLN-S	2
16	17009	CONNECTOR, STR BULKHEAD - 2700-12	1

H100-00061 - COOLING FAN MOTOR COMPONENTS - (COMMON)

NOTE: APPLY GREASE TO O-RINGS

.

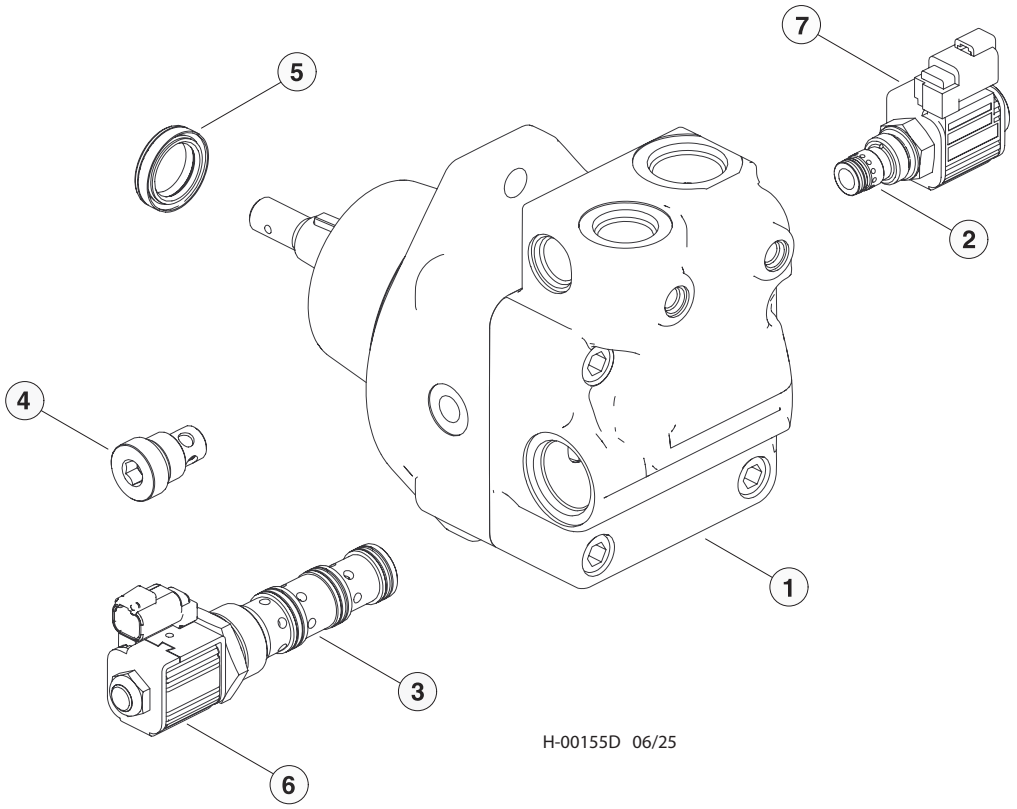

Item	Part #	Description	Qty.
1	55215	MOTOR, FAN DRIVE - RADIATOR W/FAN CONTR0L	1
2	57603	VALVE, PROPORT. FAN MOTOR (SMALL)	1
3	57604	VALVE, REVERSING FAN MOTOR (LARGE)	1
4	58171	ASSEMBLY, CHECK VALVE	1
5	57688	SHAFT SEAL	1
6	58627	COIL	1
7	CCP024H	COIL	1

H100-00070 - HYDRAULIC TANK SURGE TANK INSTALLATION AND PIPING - (COMMON)

NOTE: HYDRAULIC FITTINGS GET 545 LOCTITE™

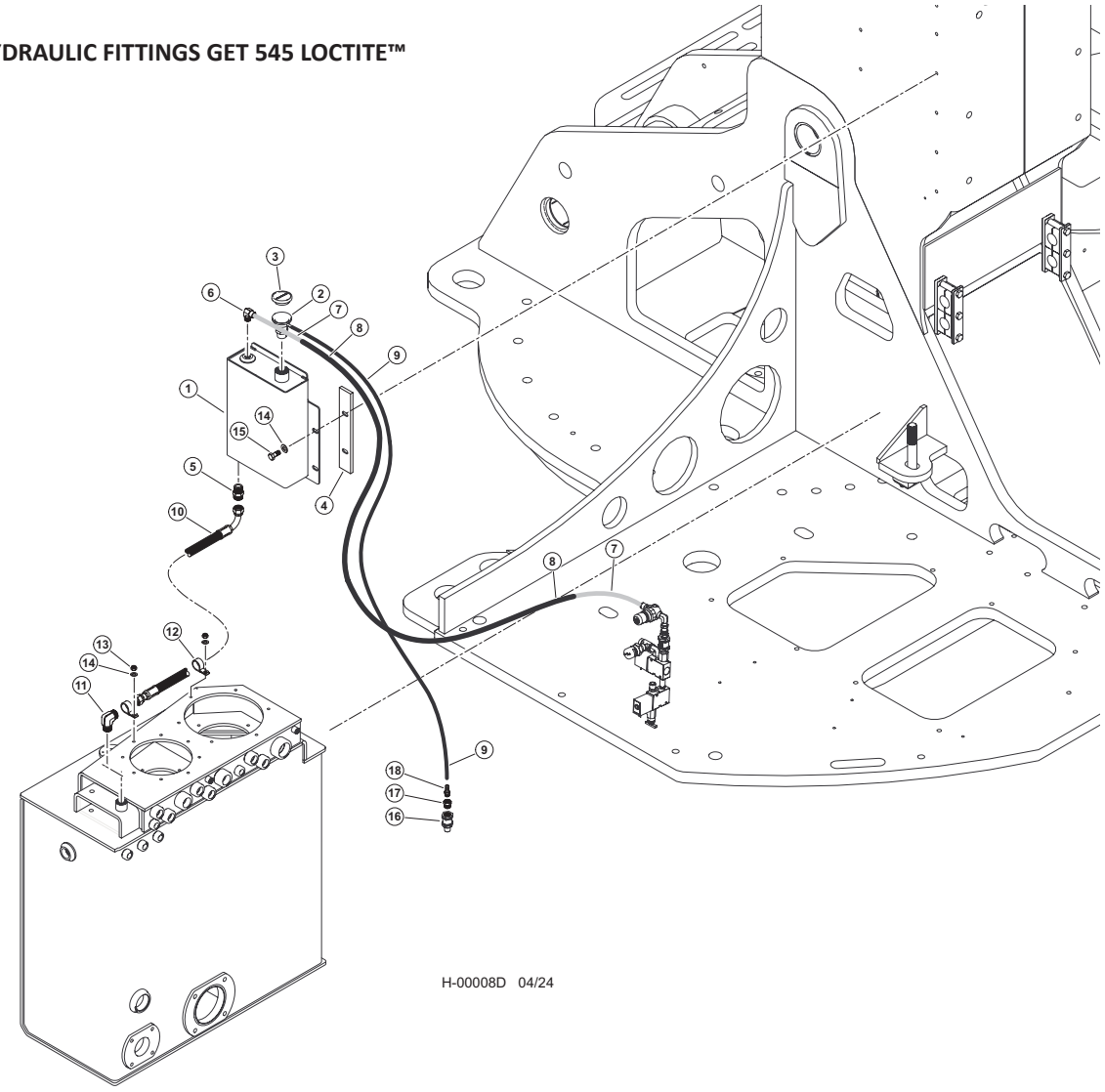

Item	Part #	Description	Qty.
1	60720	TANK, OVERFLOW	1
2	17156	STEM, HYDRAULIC TANK RELIEF CAP	1
3	18135	CAP, HYD. RESERVOIR RELIEF - 13 PSI	1
4	60741	BAR, MOUNTING - RUBBER	2
5	15201	CONNECTOR, STR - FF2031T-1212S	1
6	53086	CONNECTOR, ELBOW - PUSH ON(VACUUM)(3/8”)	1
7	51738	HOSE, VACUUM PUMP 3/8” PUSH ON	8’
8	17450	SPLIT LOOM - .3875” BULK	8’
9	16238	HOSE, FUEL LINE (BULK ROLL) - .3125”	5’
10	65818 - (65817 - KIT)	HOSE, HYD, 187TC41 12-12FJ-12O9 **(HYDRAULIC TANK OVERFLOW)**	1
11	58210	FITTING, 12-CTX-S	1
12	58382	CABLE CLAMP, CUSHIONED, 1_1/4” DIA	2
13	15507	NUT, NYLOCK - .375”	2
14	15528	WASHER, SAE FLAT - .375”	2
15	11707	BOLT - .375” X 1	4
16	15652	VALVE, CHECK - HYDRAULIC/FUEL	1
17	11318	BUSHING, REDUCER - 5406-6-4	1
18	16990	CONNECTOR, STR HOSE BARB - 4244-5-4	1

H100-00080 - GULLWING CYLINDER & HYDRAULIC TANK FILL PIPING - (COMMON)

NOTE: HYDRAULIC FITTINGS GET 545 LOCTITE™

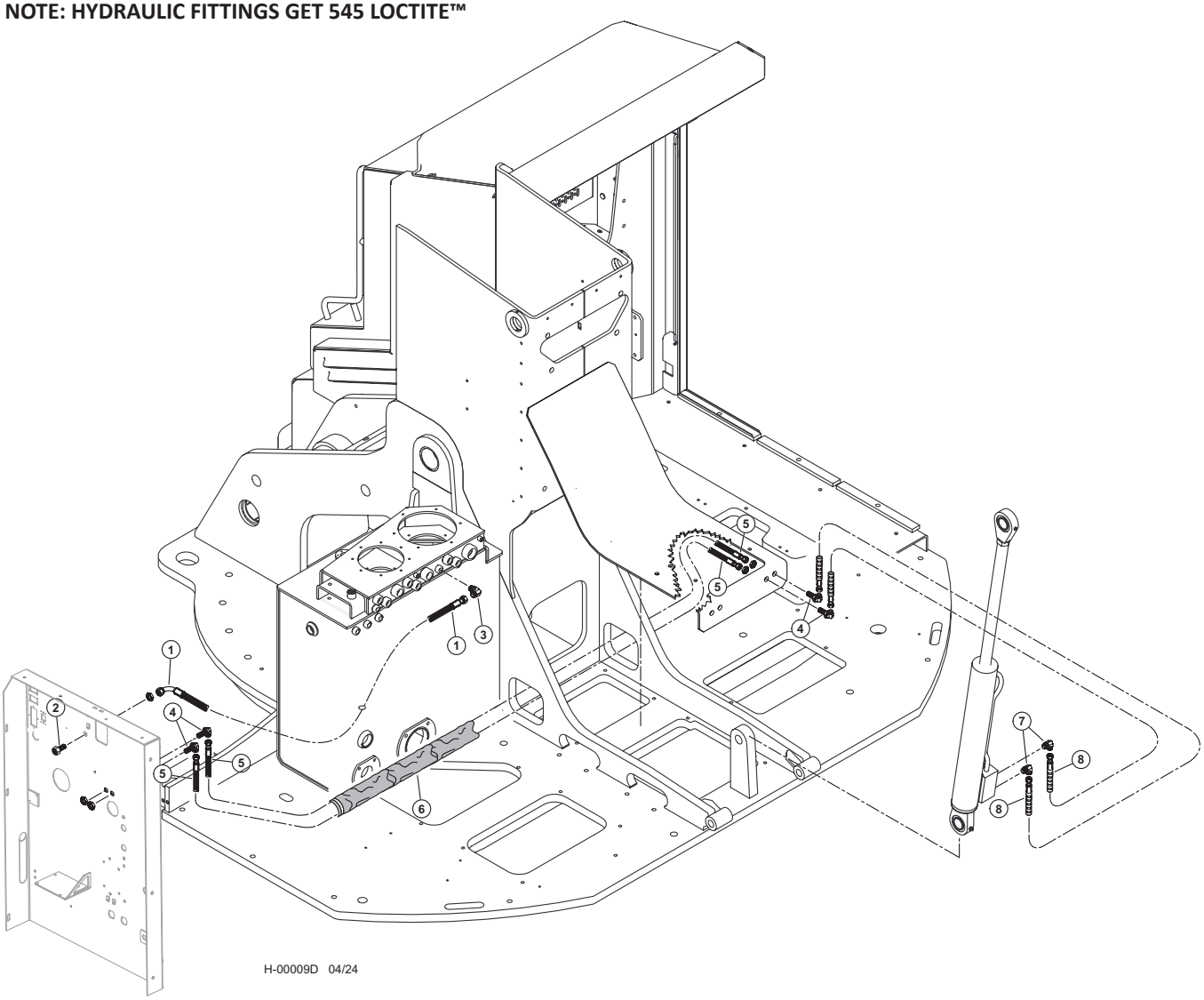

Item	Part #	Description	Qty.
1	65825 - (65817 - KIT)	HOSE, HYD, 187TC34 08-08JS-08J9 **(HYD FILL PUMP BULKDHEAD TO HYD. TANK RETURN FILTER)**	1
2	54799	BULKHEAD CONN -8JIC X-8 ORB	1
3	15481	ELBOW, 90 - 6801-8	1
4	54808	90* BULKHEAD UNION ELBOW -4 JIC WITH L/N	4
5	65826 - (65817 - KIT)	HOSE, HYD, 387TC109 04-04JS-04JS **(LIFT PUMP ELECTRICAL PANEL BULKHEAD TO CYLINDER BULKHEAD)**	2
6	50188	SLEEVE, PROTECTIVE HOSE - 150	1
7	51931	ELBOW, 90 - 4-6 C50X-S (JIC)	2
8	65832 - (65817 - KIT)	HOSE, HYD, 487TC21 04-04JS-04JS-SW **(GULLWING LIFT CYLINDER TO BULKHEAD)**	2

H100-00090 - HYDRAULIC TANK FILL HOSE ASSEMBLY - (COMMON)

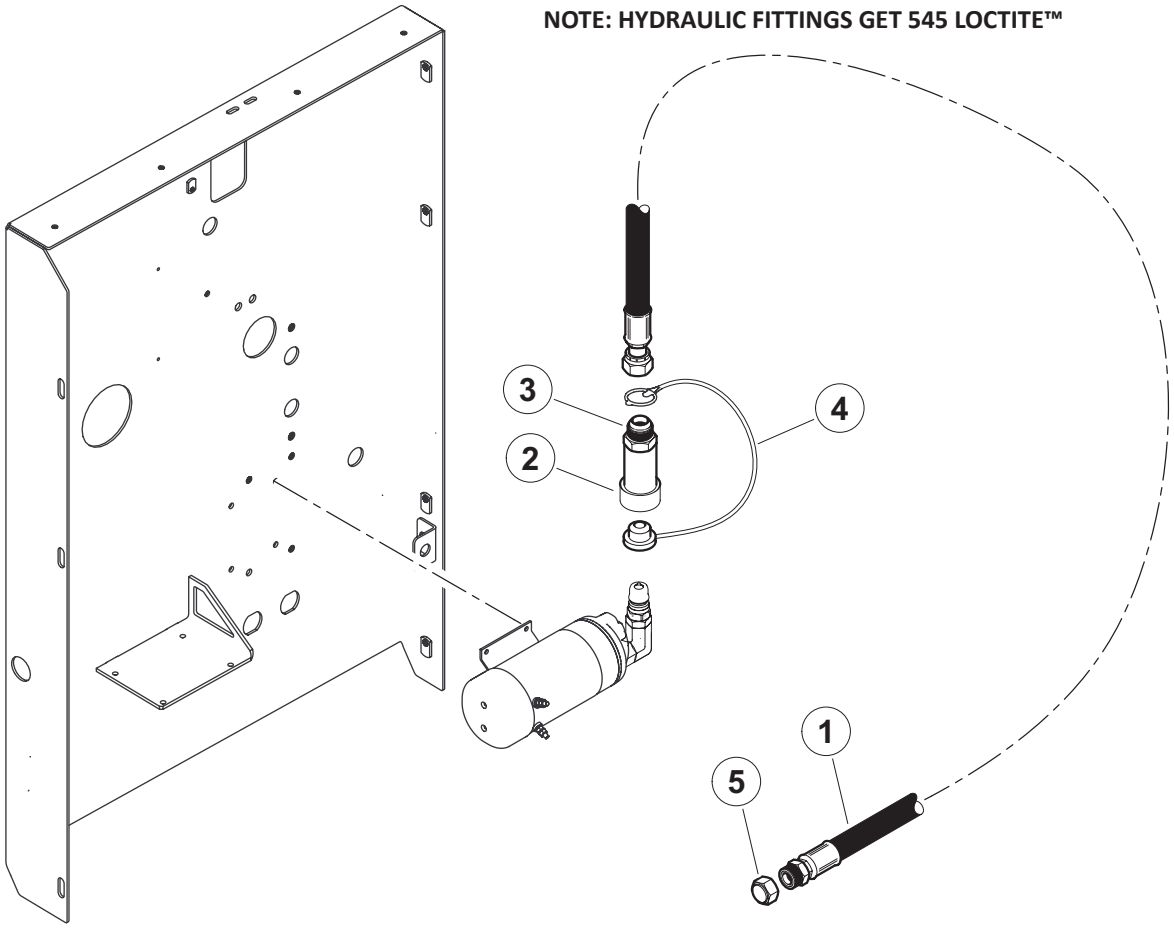

H-00010D 04/24

Item	Part #	Description	Qty.
1	65836 - (65817 - KIT)	HOSE, HYD, 187TC120 12-12JS-12MJ **(HYD FILL HOSE FOR FILL PUMP)**	2
2	55621	QUICK DISCONNECT FEMALE- 3/4	1
3	11324	CONNECTOR, STR - 6400-12	1
4	55616	PLUG, FILL HOSE - C SERIES	1
5	11399	CAP - 304-C-12	1

H100-00100 - BOOM LIGHT WIRE HOSE ASSEMBLY

NOTE: HYDRAULIC FITTINGS GET 545 LOCTITE™

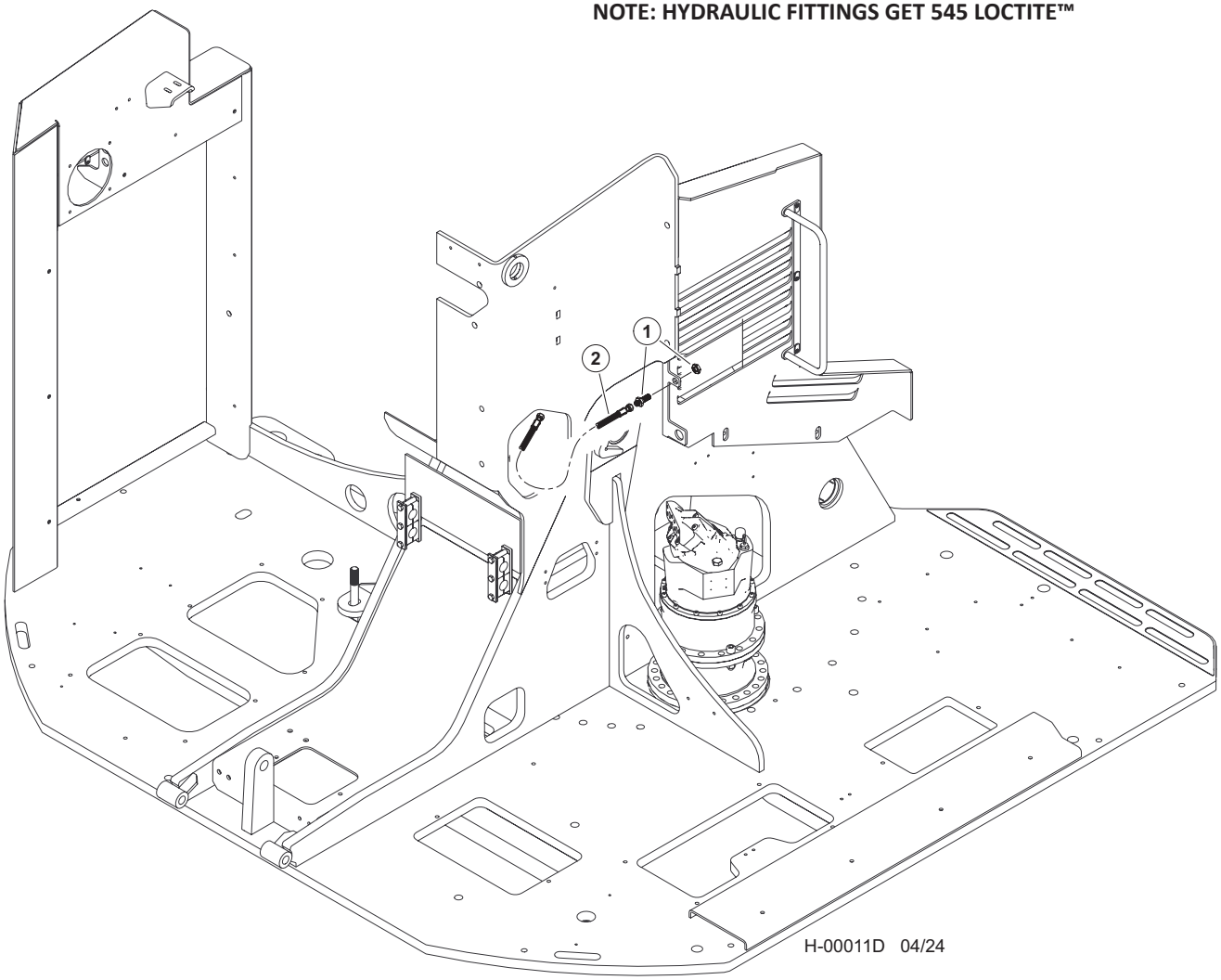

Item	Part #	Description	Qty.
1	50420	CONNECTOR, STR BULKHEAD - 832-TT-06	1
2	65831 - (65817 - KIT)	HOSE, HYD, 387TC68 06-06OS-06OS **(LIGHT WIRE, BH TO BOOM)**	1

H100-00110 - HYDRAULIC TANK - SINGLE PUMP SUCTION

NOTE: APPLY GREASE TO O-RINGS

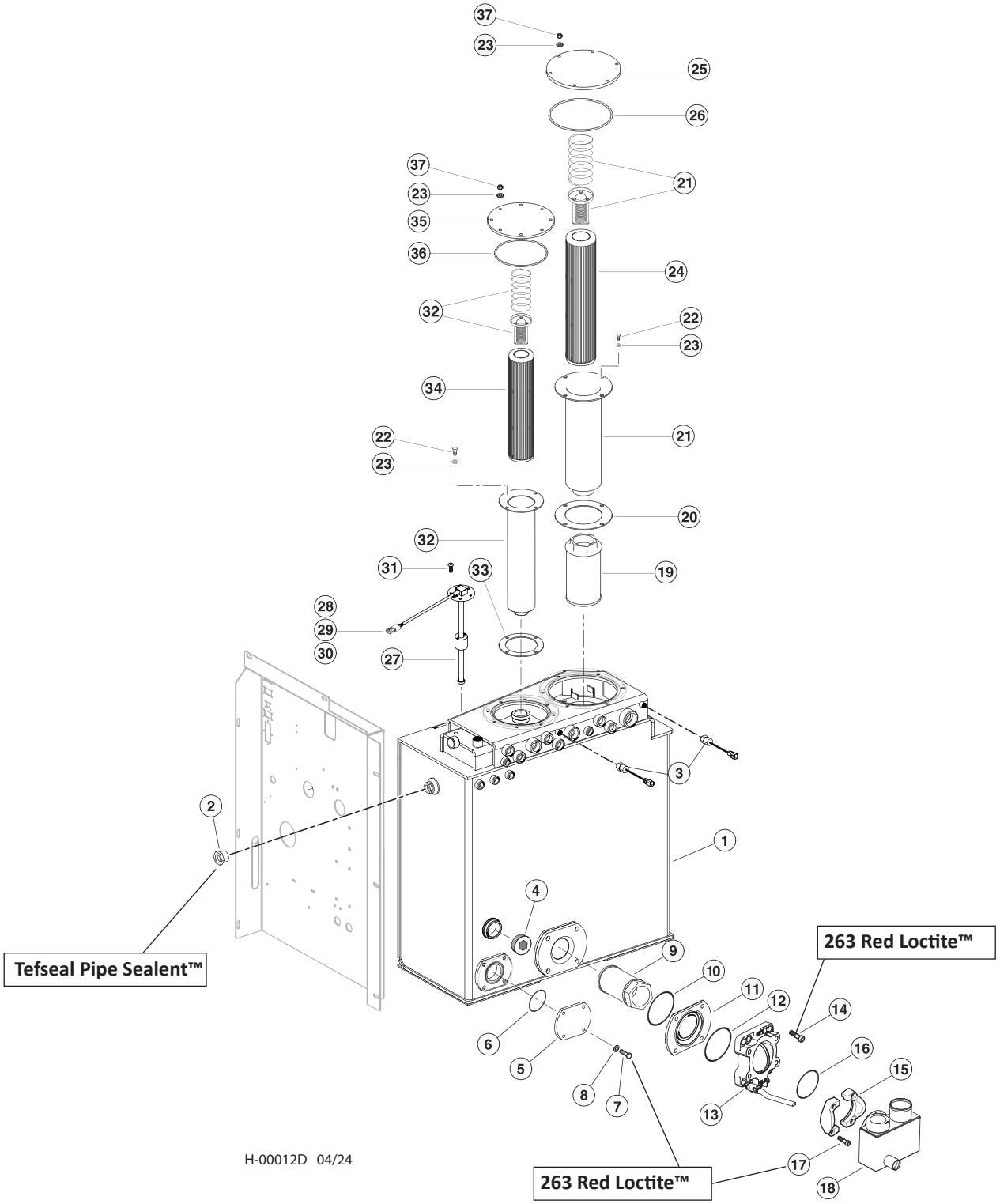

H100-00110 - HYDRAULIC TANK - SINGLE PUMP SUCTION

Item	Part #	Description	Qty.
1	60350	TANK, HYDRAULIC - D SERIES	1
2	24308	SIGHT GLASS - HYDRAULIC TANK **TEFSEAL PIPE SEALANT™**	1
3	58307	SWITCH, PRESSURE - SCHROEDER (37 psi)	2
4	53105	PLUG, PIPE - 2”	1
5	60537	FLANGE, BLANK TANK - D-SERIES	1
6	58061	O-RING, FLANGE BLANK D-SERIES	1
7	10783	BOLT - .5” X 1” **263 RED LOCTITE™**	4
8	15534	WASHER, SAE FLAT - .5”	4
9	15842	FILTER, SCREEN - IMPLEMENT	1
10	51726	ORING, HDYRAULIC TANK	1
11	42306	PLATE, INTER.-SUCTION PORT 100mm VALVE	1
12	58334	O-RING, 4” BUTTERFLY VALVE (54786)	1
13	54786	VALVE, BUTTERFLY (4”)	1
14	23095	BOLT, ALLEN HEAD - .625” x 2” **263 RED LOCTITE™**	4
15	51625	KIT, FLANGE - SUCTION TUBE (4”)	1
16	51725	ORING, HDY. TANK BALL VALVE	1
17	50383	BOLT - 16MM-2.0P X 50MM **263 RED LOCTITE™**	4
18	607450	CANISTER, SUCTION D-MOD	1
19	51624	DIFFUSER, FILTER - MAIN RETURN HYD TANK	1
20	52126	GASKET, MAIN RETURN FILTER - (51620)	1
21	51620	FILTER KIT, HYD. TANK MAIN RETURN	1
22	15542	BOLT - .375” X .75”	8
23	15528	WASHER, SAE FLAT - .375”	22
24	52350	ELEMENT, MAIN RETURN - HI EFF.	1
25	46568	COVER, ACCESS HR TANK W-KEEPER	1
26	42310	O-RING, HYD TANK COVER - 10.38”	1
27	57264	SENDER, HYD OIL LEVEL W/FLOAT	1
28	54065	SOCKET, CONTACT - 2	1
29	53176	CONNECTOR, TERMINAL 16-18G SOLID DEUTSCH	2
30	54064	WEDGELOCK	1
31	22862	SCREW, MACHINE - #10-24 X .5” (BUTTON)	5
32	51621	FILTER KIT, HYD. TANK - CASE RETURN	1
33	16852	KIT, SEAL REPAIR - RETURN FILTER	1
34	22647	ELEMENT, HYDRAULIC TANK - SMALL	1
35	54414	COVER, HYDRAULIC TANK SINGLE	1
36	15600	O-RING - 8” DIA. -369	1
37	15507	NUT, NYLOCK - .375”	14

H100-00120 - HYDRAULIC TANK - DUAL PUMP SUCTION

NOTE: HYDRAULIC FITTINGS GET 545 LOCTITE™

NOTE: APPLY GREASE TO O-RINGS

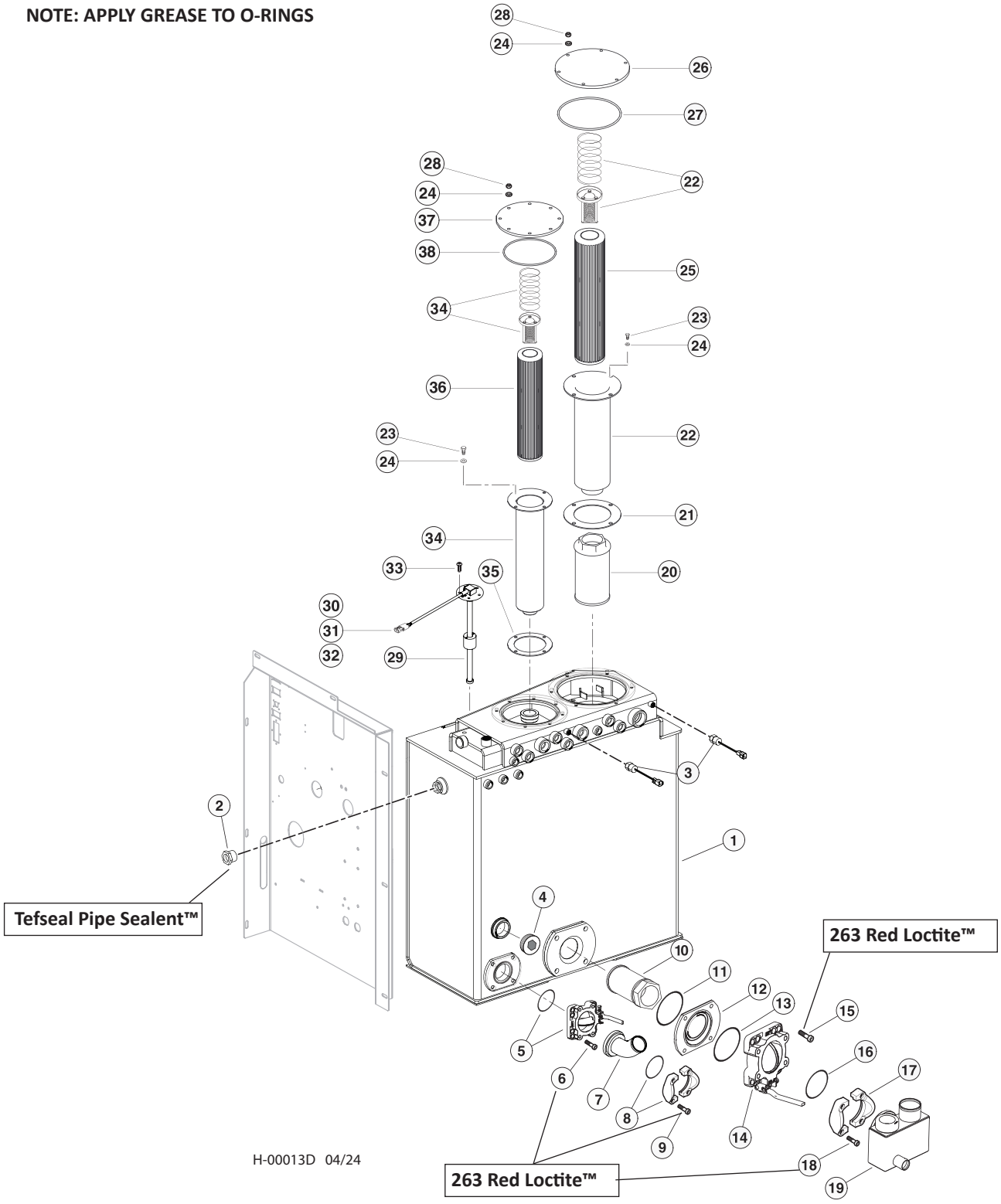

H100-00120 - HYDRAULIC TANK - DUAL PUMP SUCTION

Item	Part #	Description	Qty.
1	60350	TANK, HYDRAULIC - D SERIES	1
2	24308	SIGHT GLASS - HYDRAULIC TANK **TEFSEAL PIPE SEALANT™**	1
3	58307	SWITCH, PRESSURE - SCHROEDER (37 psi)	2
4	53105	PLUG, PIPE - 2”	1
5	57834	VALVE, BUTTERFLY (2.5”) - DISC SAW	1
6	50445	BOLT, ALLEN HEAD - .5” X 1.25” **263 RED LOCTITE™**	4
7	58099	ELBOW, 45 - D-SERIES HYD. TANK (MODIFIED	1
8	15193	KIT, SPLIT FLANGE - 2.5” (CODE 61)	1
9	15551	BOLT - 12MM-1.75P X 40MM **263 RED LOCTITE™**	4
10	15842	FILTER, SCREEN - IMPLEMENT	1
11	51726	ORING, HDYRAULIC TANK	1
12	42306	PLATE, INTER.-SUCTION PORT 100mm VALVE	1
13	58334	O-RING, 4” BUTTERFLY VALVE (54786)	1
14	54786	VALVE, BUTTERFLY (4”)	1
15	23095	BOLT, ALLEN HEAD - .625” x 2” **263 RED LOCTITE™**	4
16	51725	ORING, HDY. TANK BALL VALVE	1
17	51625	KIT, FLANGE - SUCTION TUBE (4”)	1
18	50383	BOLT - 16MM-2.0P X 50MM **263 RED LOCTITE™**	4
19	607450	CANISTER, SUCTION D-MOD	1
20	51624	DIFFUSER, FILTER - MAIN RETURN HYD TANK	1
21	52126	GASKET, MAIN RETURN FILTER - (51620)	1
22	51620	FILTER KIT, HYD. TANK MAIN RETURN	1
23	15542	BOLT - .375” X .75”	8
24	15528	WASHER, SAE FLAT - .375”	22
25	52350	ELEMENT, MAIN RETURN - HI EFF.	1
26	46568	COVER, ACCESS HR TANK W-KEEPER	1
27	42310	O-RING, HYD TANK COVER - 10.38”	1
28	15507	NUT, NYLOCK - .375”	14
29	57264	SENDER, HYD OIL LEVEL W/FLOAT	1
30	54065	SOCKET, CONTACT - 2	1
31	53176	CONNECTOR, TERMINAL 16-18G SOLID DEUTSCH	2
32	54064	WEDGELOCK	1
33	22862	SCREW, MACHINE - #10-24 X .5” (BUTTON)	5
34	51621	FILTER KIT, HYD. TANK - CASE RETURN	1
35	16852	KIT, SEAL REPAIR - RETURN FILTER	1
36	22647	ELEMENT, HYDRAULIC TANK - SMALL	1
37	54414	COVER, HYDRAULIC TANK SINGLE	1
38	15600	O-RING - 8” DIA. -369	1

H100-00130 - HYDRAULIC TANK FITTINGS

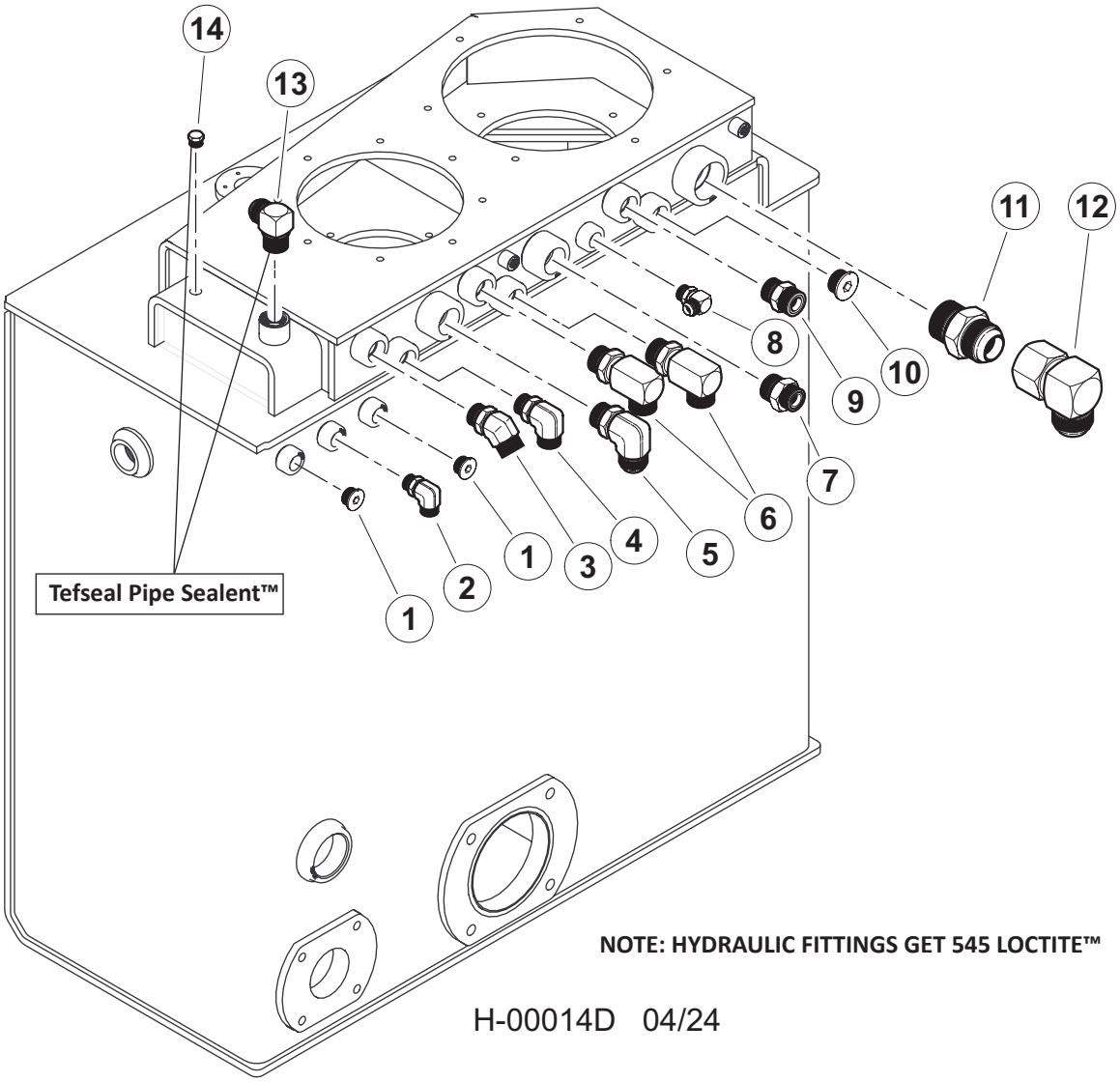

Item	Part #	Description	Qty.
1	18949	PLUG - 6408-HHP-8	2
2	20031	ELBOW, 90 - 6-8 C5OLO-S	1
3	19127	ELBOW, 45 - FF2068T-1212S	1
4	17688	ELBOW, 90 - FF1868T-1212S	1
5	15484	ELBOW, 90 - 16 C5OX-S	1
6	57444	FITTING, 12 CC5OLO-S	2
7	15225	CONNECTOR, STR - FF1852T-1616S	1
8	15481	ELBOW, 90 - 6801-8	1
9	15152	CONNECTOR, STR - FF1852T-1212S	1
10	15584	PLUG - 6408-HHP-12	1
11	22319	CONNECTOR, STR 24F5OX-S THRML B-PASS GT	1
12	54714	ELBOW, 90 SWIVEL 24C6X-S (24 JICMF)	1
13	58210	FITTING, 12-CTX-S **TEFSEAL PIPE SEALANT™**	1
14	15515	PLUG - 5406-P-4	1

H100-00140 - HYD TANK HEATER U. (120V)

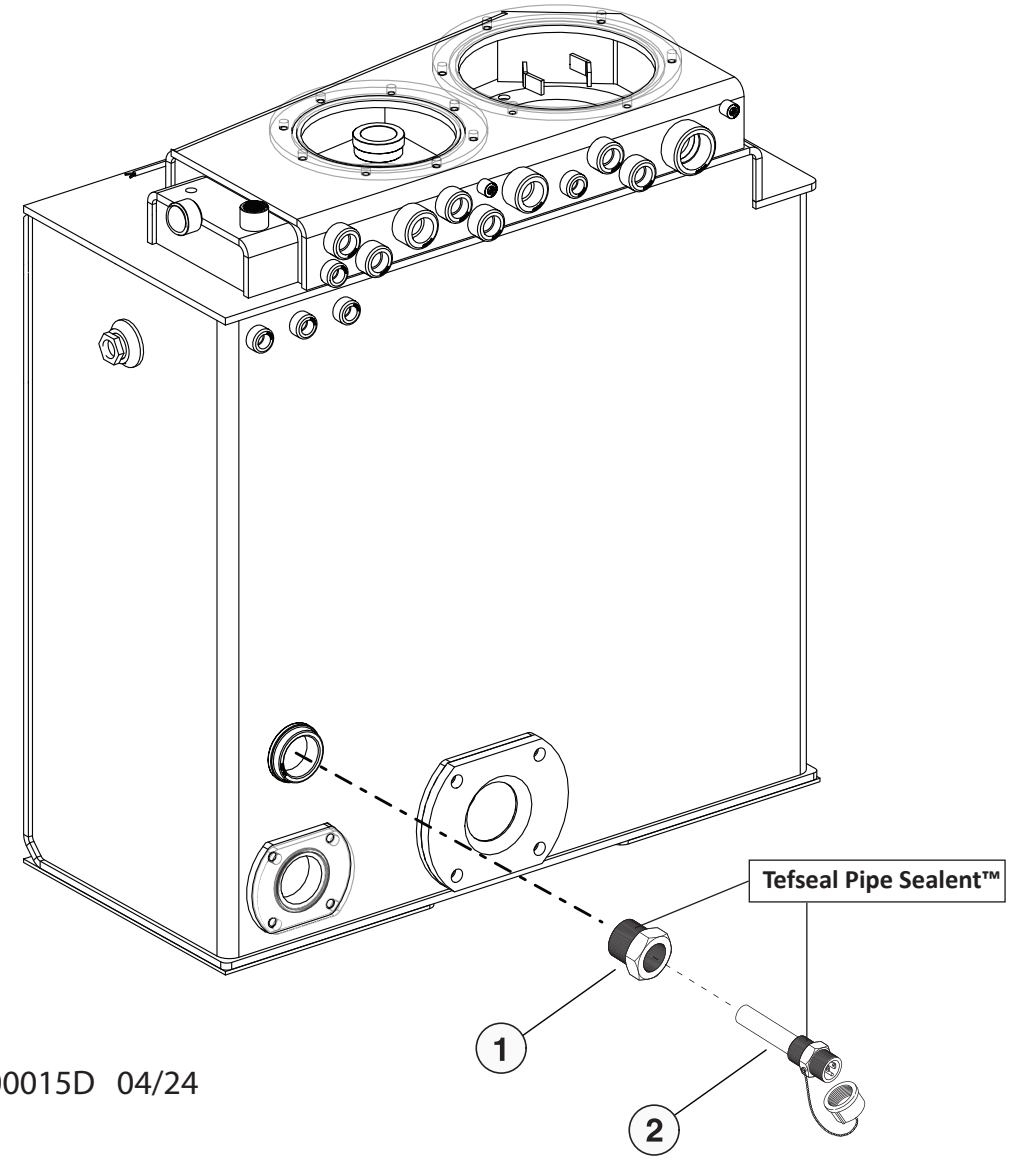

H-00015D 04/24

Item	Part #	Description	Qty.
1	20069	HEATER ELEMENT- HYD. TANK (120V) **TEFSEAL PIPE SEALANT™**	1
2	26397	BUSHING, BLACK - 2” X 1.25” **TEFSEAL PIPE SEALANT™**	1

H100-00150 - HYDRAULIC TANK INSTALLATION

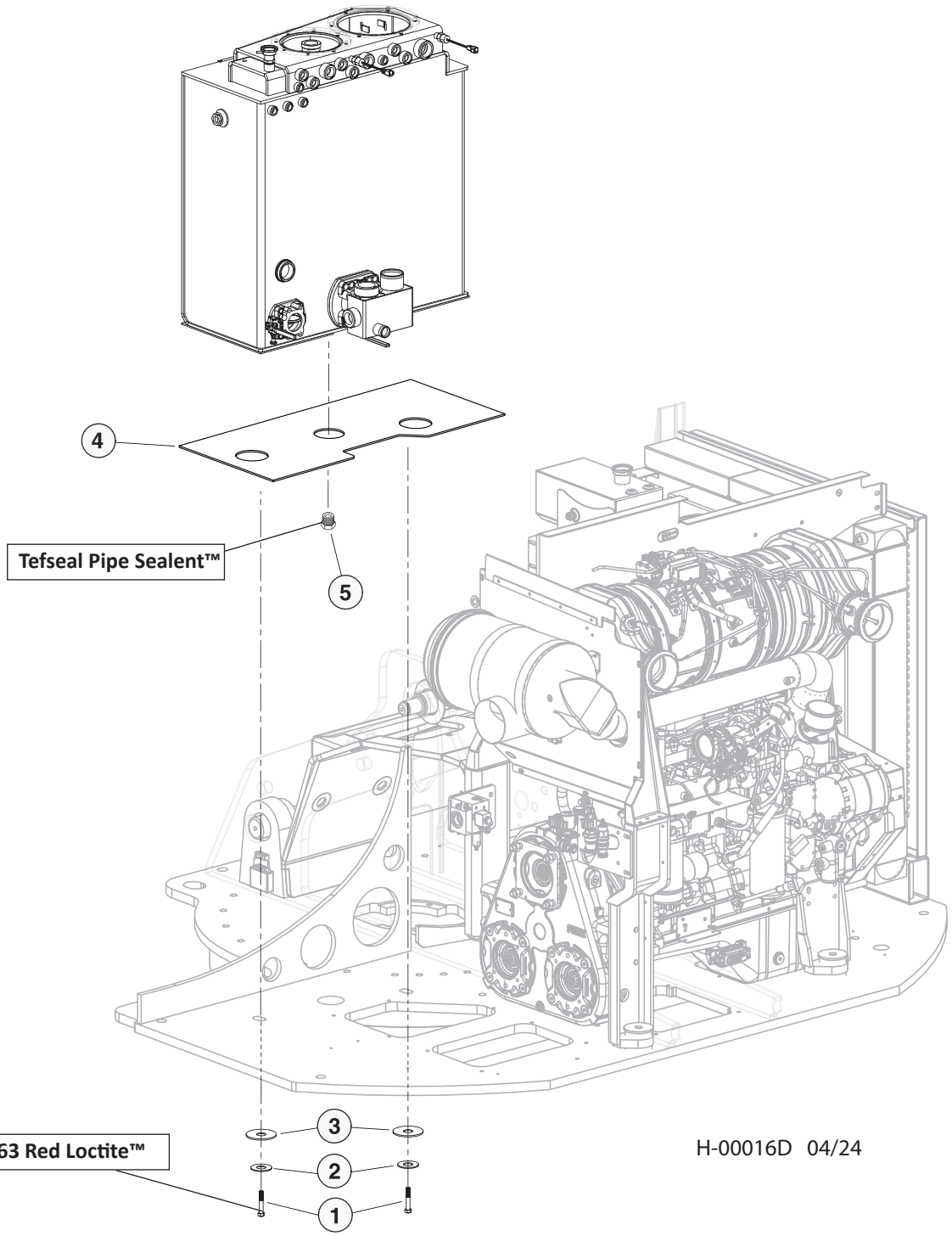

Item	Part #	Description	Qty.
1	57870	BOLT - .625” X 2.75” **263 Red Loctite™**	2
2	54148	WASHER, BURNED - .66” X 2” x 1/4”	2
3	17918	WASHER, ISOLATOR MOUNT - .875” X 3.5”	2
4	60366	RUBBER, HYD TANK D-SERIES	1
5	16887	PLUG - 5406-HHP-12/ 3/4 HEX PIPE **TEFSEAL PIPE SEALANT™**	1

W450/WS300 MAIN CONTROL VALVES

H200-00100 - MAIN VALVE INSTALLATION - (W450/W300 VALVE)

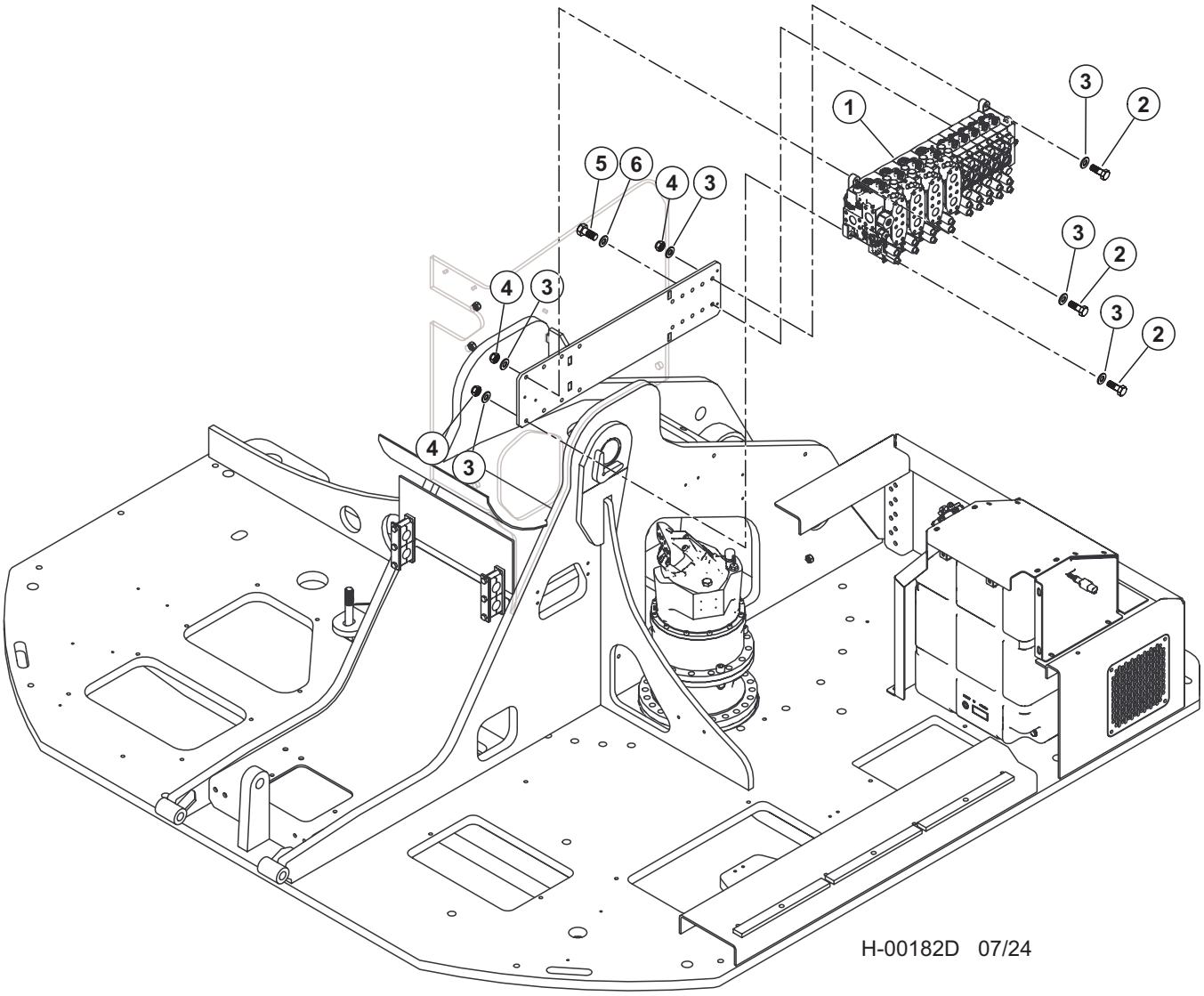

Item	Part #	Description	Qty.
1	58326	VALVE, VA450 - DISC SAW (3VA/ 5 K220)	1
	53327	VALVE, VA450 - DISC NONLVL (3VA/ 3 K300)	1
	53308	VALVE, VA450 - DISC / BAR (4VA/ 5 K220)	1
	53334	VALVE, VA450 - TN DISC/PRO (4VA/ 3 K300)	1
	53322	VALVE, VA450 - PROC/AUST (4-450/ 3-300)	1
	53330	VALVE, VA450 - SKIDMORE(4-450/1-300)	1
	533280	VALVE, VA450 - SATCO TL755 (3-450 /3-300	1
	659740	VALVE, VA450 - PRCSR, FXD, DANGLE	1
	53336	VALVE, VA450 - PRO/HD SQUIRT (3450/4300	1
2	23265	BOLT - .375” X 2.25”	3
3	10802	WASHER, FLAT - .375”	6
4	10813	NUT, LOCK - .375”	3
5	18415	BOLT - 12MM-1.75P X 30MM	1
6	15534	WASHER, SAE FLAT - .5”	1

H200-00110 - MAIN VALVE HYD. FITTINGS - DISC SAW (LEVELING) - (W450/W300 VALVE)

NOTE: HYDRAULIC FITTINGS GET 545 LOCTITE™

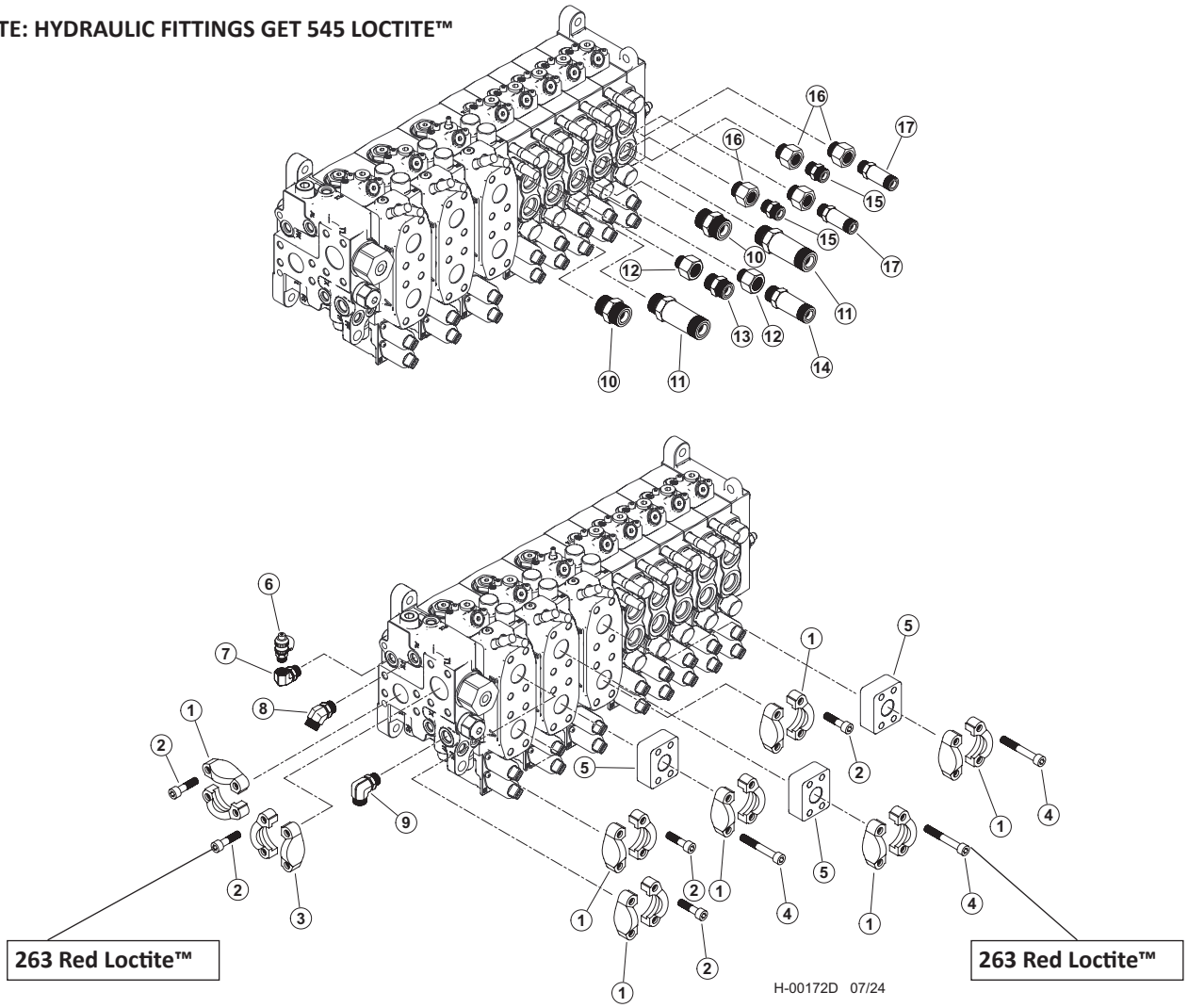

Item	Part #	Description	Qty.
	58326	VALVE, VA450 - DISC SAW (LEVELING)	1
	65975	KIT, HYD FITTING KIT, 450, DISCSAW BASIC	1
	65613	KIT, FITTING DISC LEVEL 450V D-SERIES	1
1	65457	20SFXO & M12 SPLIT FLANGE (CODE 62)	7
2	18988	BOLT, ALLEN HEAD - 12MM-1.75P X 45MM **263 RED LOCTITE™**	20
3	15186	KIT, SPLIT FLANGE - 1.5" (CODE 61)	1
4	59135	BOLT, SHC, 12.9 - M12-1.75P X 80mm **263 RED LOCTITE™**	12
5	65458	ANCHOR-ASX-20GP STANDOFF	3
6	57820	TAP, GAUGE PORT # 6 SAE - Oring Boss	1
7	58348	FITTING, ELBOW 6-AOEG5-5	1
8	23015	ELBOW, 45 - 6 V5OLO-S	1
9	16360	ELBOW, 90 - FF1868T-0808S	1
10	15152	CONNECTOR, STR - FF1852T-1212S	2
11	19092	CONNECTOR, STR LONG - 848L-TTO-12X12	2
12	16358	BUSHING, REDUCER - 6410-12-10	2
13	50039	CONNECTOR, STR - 848-TTO-10X10	1
14	52554	CONNECTOR, STR LONG - 10X10	1
15	15117	CONNECTOR, STR - FF1852T-0808S	2
16	20067	BUSHING, REDUCER - 6410-12-8	4
17	19091	CONNECTOR, STR LONG - 848L-TTO-08X08	2

H200-00120 - MAIN VALVE HYD. FITTINGS - DISC SAW (NON-LEVELING) (W450/W300 VALVE)

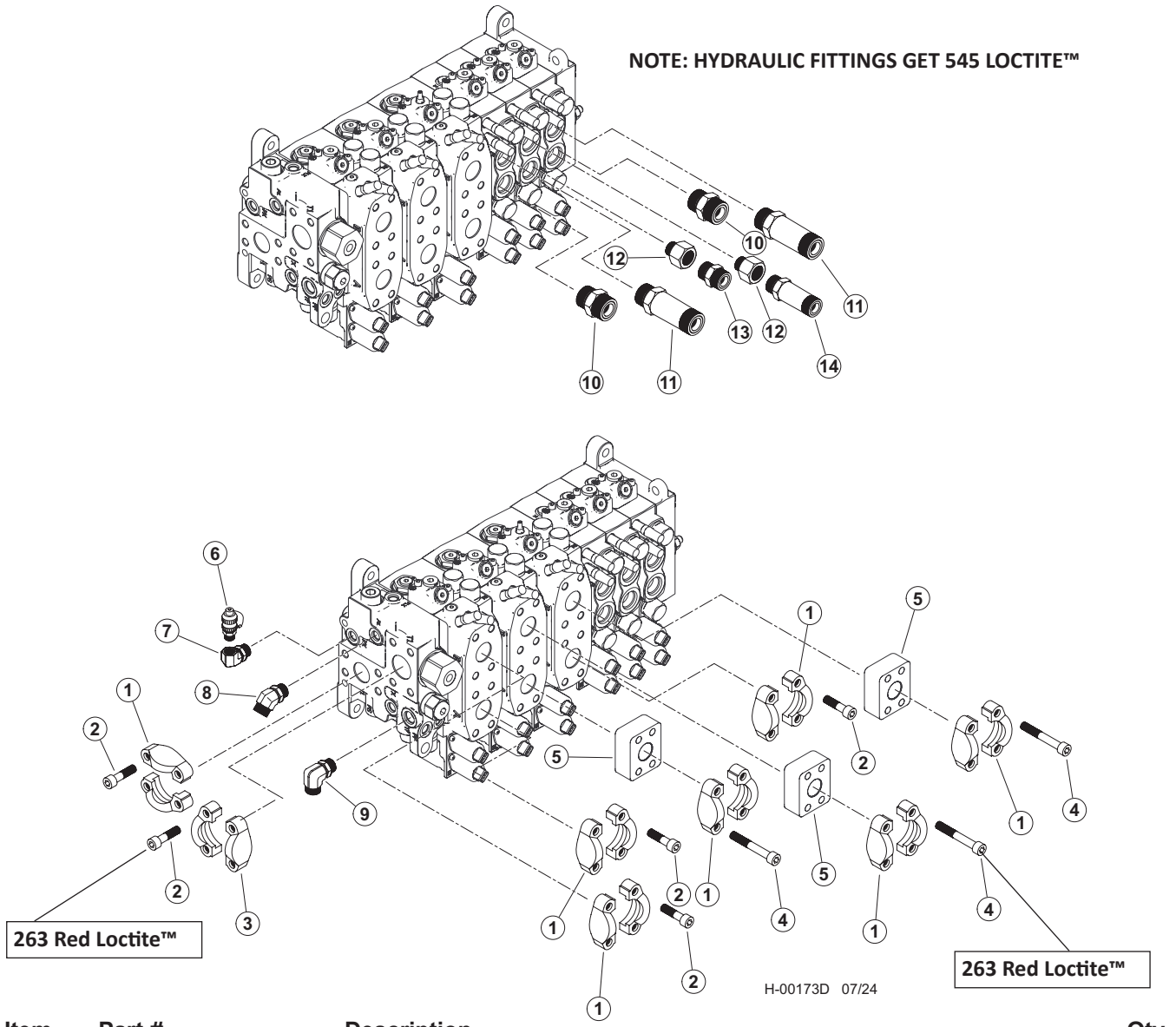

Item	Part #	Description	Qty.
	53327	VALVE, VA450 - DISC SAW (NON-LEVELING)	1
	65975	KIT, HYD FITTING KIT, 450, DISCSAW BASIC	1
1	65457	20SFXO & M12 SPLIT FLANGE (CODE 62)	7
2	18988	BOLT, ALLEN HEAD - 12MM-1.75P X 45MM **263 RED LOCTITE™**	20
3	15186	KIT, SPLIT FLANGE - 1.5" (CODE 61)	1
4	59135	BOLT, SHC, 12.9 - M12-1.75P X 80mm **263 RED LOCTITE™**	12
5	65458	ANCHOR-ASX-20GP STANDOFF	3
6	57820	TAP, GAUGE PORT # 6 SAE - Oring Boss	1
7	58348	FITTING, ELBOW 6-AOEG5-5	1
8	23015	ELBOW, 45 - 6 V5OLO-S	1
9	16360	ELBOW, 90 - FF1868T-0808S	1
10	15152	CONNECTOR, STR - FF1852T-1212S	2
11	19092	CONNECTOR, STR LONG - 848L-TTO-12X12	2
12	16358	BUSHING, REDUCER - 6410-12-10	2
13	50039	CONNECTOR, STR - 848-TTO-10X10	1
14	52554	CONNECTOR, STR LONG - 10X10	1

H200-00121 - WS450 MAIN VALVE SECTION - INLET - (DISC SAW)

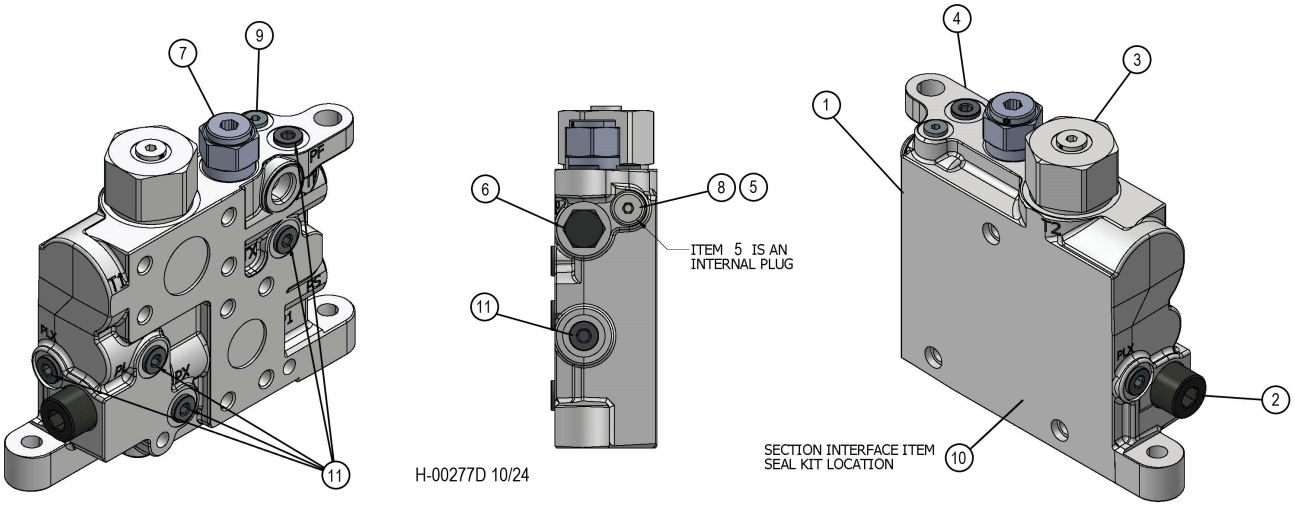

Item	Part #	Description	Qty.
1	20106626	VA300/450 BUILD PROGRAM INLET	1
2	19217256	PLC182-330-20 RELIEF MAIN R/V 330 BAR 4785 PSI	1
3	20106606	MF5 COUNTER PRESSURE VALVE 6764842	1
4	20110560	VA450 BLANK INLET SECTION LSB450	1
5	20110554	TP INTERNAL PLUG	1
6	19220867	CHECK CART C08-2 STD 3PSI	1
7	20090649	VA300/450 REDUCING VALVE R35	1
8	20110562	PLUG 14MM X 1.5 METRIC	1
9	19213753	HOLLOW HEX PLUG SAE-ORB	1
10	20089696	SEAL KIT VA300 & VA450 INTERSECT	1
11	19215123	PLUG #6 SAE HOLLOW HEX	6

H200-00122 - W450 MAIN VALVE SECTION - TOOL TILT - (DISC SAW)

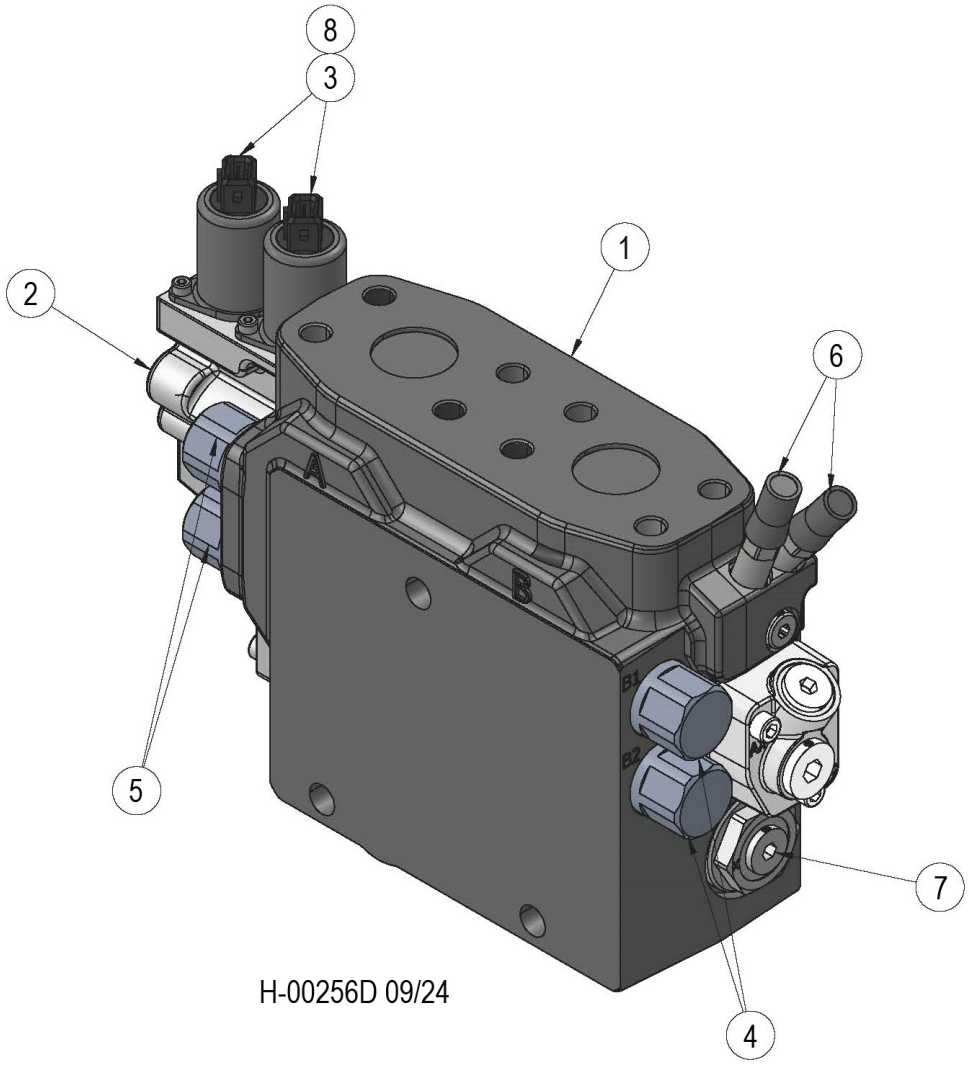

H-00256D 09/24

Item	Part #	Description	Qty.
1	20108690	VA450 BUILD PROGRAM WORK SECTION	1
2	20099915	KIT EC-CAP COMPLETE U VA450/VA300 ENDCAP W/O STROKE LIMITER	1
3	699190	24 VDC SOLENOID AMP W ORIFICE 0.8 MM	2
4	19217273	300 BAR PORT RELIEF VALVE 9120029917	2
5	56472	K220-WPRV-330 330 BAR PORT RELIEF VALVE	2
6	699170	SUPPLY REDUCER L90-LSR	2
7	55734	COMPENSATOR, MAIN-TOOL-STK- 450 VALVE	1
8	699180	1.00MM PILOT ORIFICE	2
*	20099960	SPOOL 4AC VA450 HEEL/TOOL TILT SPOOL	1
*	699200	KIT SPRING PACK 6.5-19 BAR STD VA450	1
*	20107604	KIT B-SIDE COVER, U/U VA450/VA300 CAP B W/ #8 SAE PLUG	1

*** MEANS NOT SHOWN)**

H200-00123 - W450 MAIN VALVE SECTION - STICK BOOM - (DISC SAW)

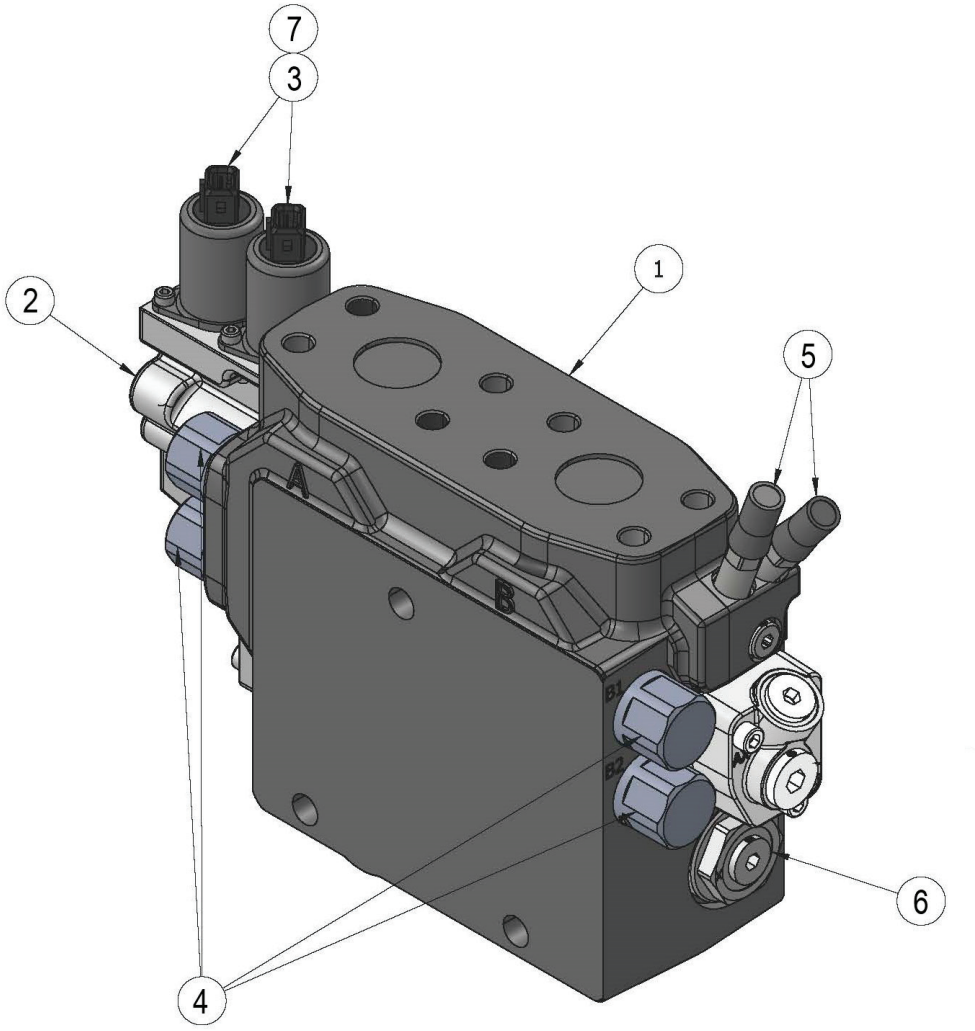

H-00257D 09/24

Item	Part #	Description	Qty.
1	20108694	VA450 BUILD PROGRAM WORK SECTION	1
2	20099915	KIT EC-CAP COMPLETE U VA450/VA300 ENDCAP W/O STROKE LIMITER	1
3	699190	24 VDC SOLENOID AMP W ORIFICE 0.8 MM	2
4	56161	RELIEF - 19215623	4
5	699170	SUPPLY REDUCER L90-LSR	2
6	55734	COMPENSATOR, MAIN-TOOL-STK- 450 VALVE	1
7	699180	1.00MM PILOT ORIFICE	2
*	20099958	VA450 STICK 4AA SPOOL	1
*	699200	KIT SPRING PACK 6.5-19 BAR STD VA450	1
*	20107604	KIT B-SIDE COVER, U/U VA450/VA300 CAP B W/ #8 SAE PLUG	1

*** MEANS NOT SHOWN)**

H200-00124 - W450 MAIN VALVE SECTION - MAIN BOOM - (DISC SAW)

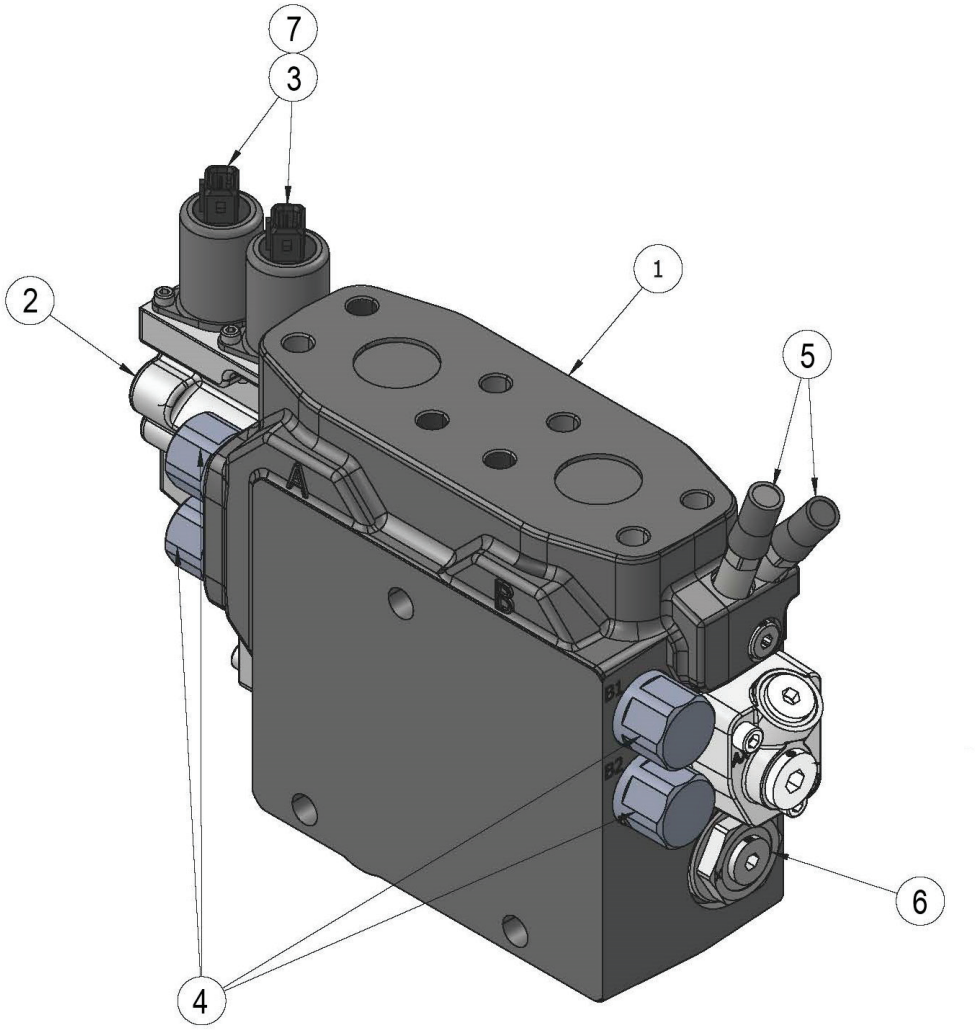

H-00257D 09/24

Item	Part #	Description	Qty.
1	20108696	VA450 BUILD PROGRAM WORK SECTION	1
2	20099915	KIT EC-CAP COMPLETE U VA450/VA300 ENDCAP W/O STROKE LIMITER	1
3	699190	24 VDC SOLENOID AMP W ORIFICE 0.8 MM	2
4	56161	RELIEF - 19215623	4
5	699170	SUPPLY REDUCER L90-LSR	2
6	55734	COMPENSATOR, MAIN-TOOL-STK- 450 VALVE	1
7	699180	1.00MM PILOT ORIFICE	2
*	57318	SPOOL, 4AB VA450 HOIST SPOOL	1
*	699200	KIT SPRING PACK 6.5-19 BAR STD VA450	1
*	20107604	KIT B-SIDE COVER, U/U VA450/VA300 CAP B W/ #8 SAE PLUG	1

*** MEANS NOT SHOWN)**

H200-00125 - WS300 MAIN VALVE SECTION - ACCUMULATOR - (DISC SAW)

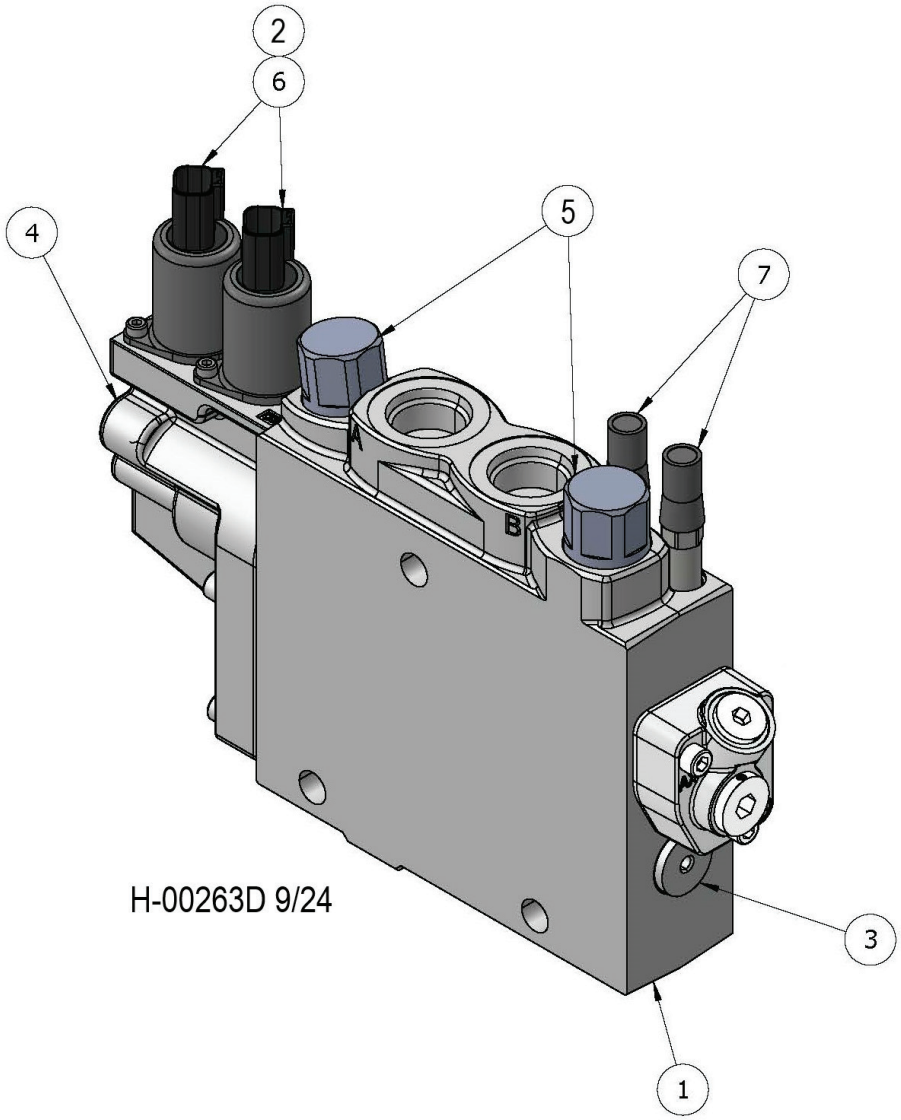

Item	Part #	Description	Qty.
1	20108703	VA300 BUILD PROGRAM WORK SECTION	1
2	699180	1.00MM PILOT ORIFICE	2
3	20106632	K1 COMP KIT VA300	1
4	20099915	KIT EC-CAP COMPLETE U VA450/VA300 ENDCAP W/O STROKE LIMITER	1
5	19217273	300 BAR PORT RELIEF VALVE 9120029917	2
6	696080	SOLENOID VALVE 24VDC ORIFICE 0.8MM DEUTS	2
7	699170	SUPPLY REDUCER L90-LSR	2
*	53387	SPOOL, VA300, 3ARL	1
*	20107604	KIT B-SIDE COVER, U/U VA450/VA300 CAP B W/ #8 SAE PLUG	1
*	20099909	KIT SPRING PACK 6 5-19 BAR STD VA450/VA300 SPRING PACK	1

*** MEANS NOT SHOWN)**

H200-00126 - WS300 MAIN VALVE SECTION - ROTATE - (DISC SAW)

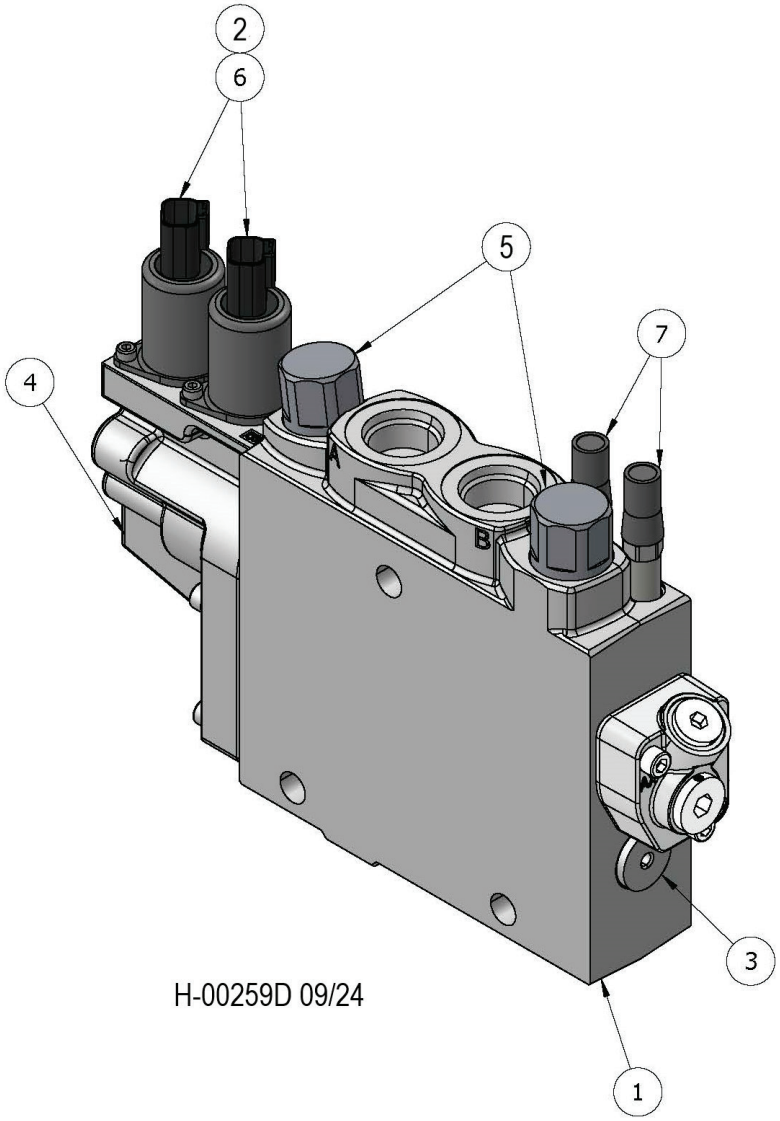

H-00259D 09/24

Item	Part #	Description	Qty.
1	20108704	VA300 BUILD PROGRAM WORK SECTION	1
2	699180	1.00MM PILOT ORIFICE	2
3	20106632	K1 COMP KIT VA300	1
4	20099915	KIT EC-CAP COMPLETE U VA450/VA300 ENDCAP W/O STROKE LIMITER	1
5	19217272	280 BAR WP RELIEF 9120029916	2
6	696080	SOLENOID VALVE 24VDC ORIFICE 0.8MM DEUTS	2
7	699170	SUPPLY REDUCER L90-LSR	2
*	53387	SPOOL, VA300, 3AR	1
*	20107604	KIT B-SIDE COVER, U/U VA450/VA300 CAP B W/ #8 SAE PLUG	1
*	20099909	KIT SPRING PACK 6 5-19 BAR STD VA450/VA300 SPRING PACK	1

*** MEANS NOT SHOWN)**

H200-00127 - WS300 MAIN VALVE SECTION - CLAMP - (DISC SAW)

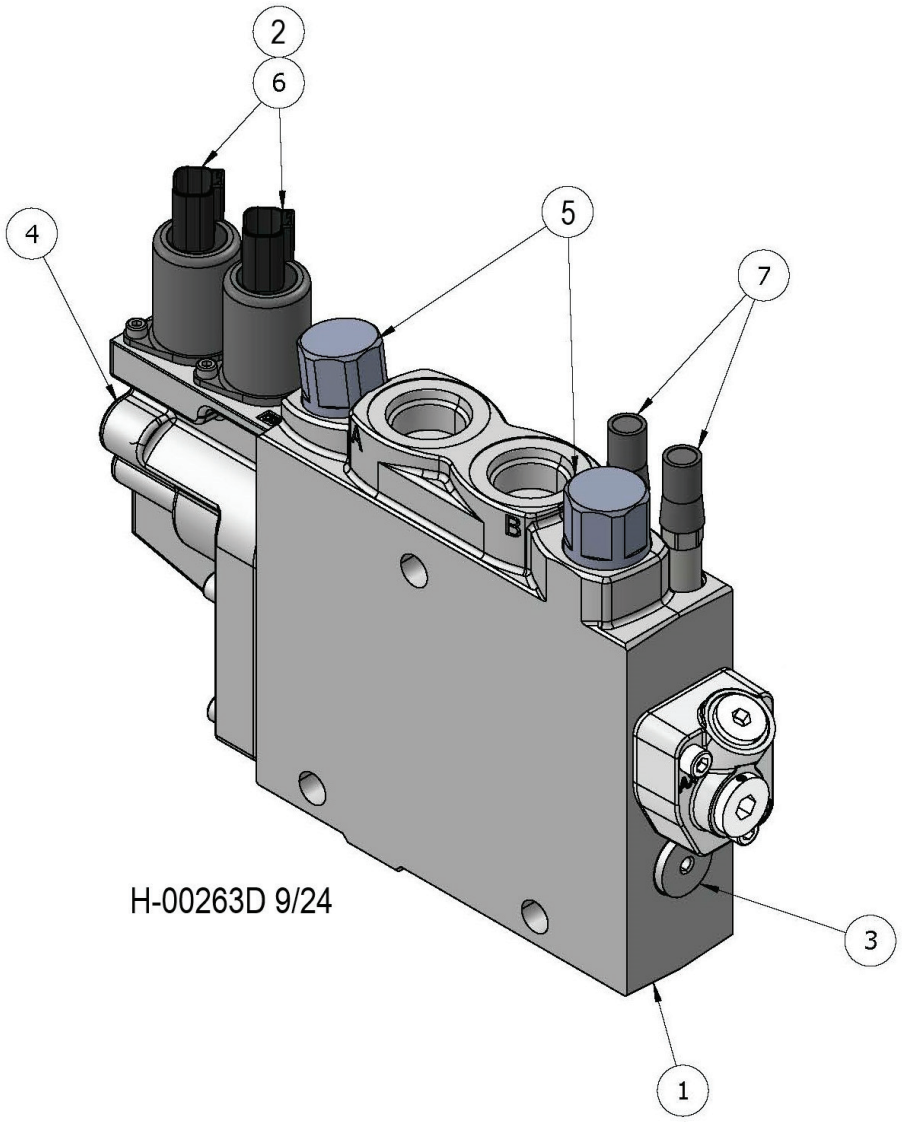

Item	Part #	Description	Qty.
1	20108703	VA300 BUILD PROGRAM WORK SECTION	1
2	699180	1.00MM PILOT ORIFICE	2
3	20106632	K1 COMP KIT VA300	1
4	20099915	KIT EC-CAP COMPLETE U VA450/VA300 ENDCAP W/O STROKE LIMITER	1
5	19217273	300 BAR PORT RELIEF VALVE 9120029917	2
6	696080	SOLENOID VALVE 24VDC ORIFICE 0.8MM DEUTS	2
7	699170	SUPPLY REDUCER L90-LSR	2
*	53387	SPOOL, VA300, 3AR	1
*	20107604	KIT B-SIDE COVER, U/U VA450/VA300 CAP B W/ #8 SAE PLUG	1
*	20099909	KIT SPRING PACK 6 5-19 BAR STD VA450/VA300 SPRING PACK	1

*** MEANS NOT SHOWN)**

H200-00128 - WS300 MAIN VALVE SECTION - CAB LEVEL - (DISC SAW)

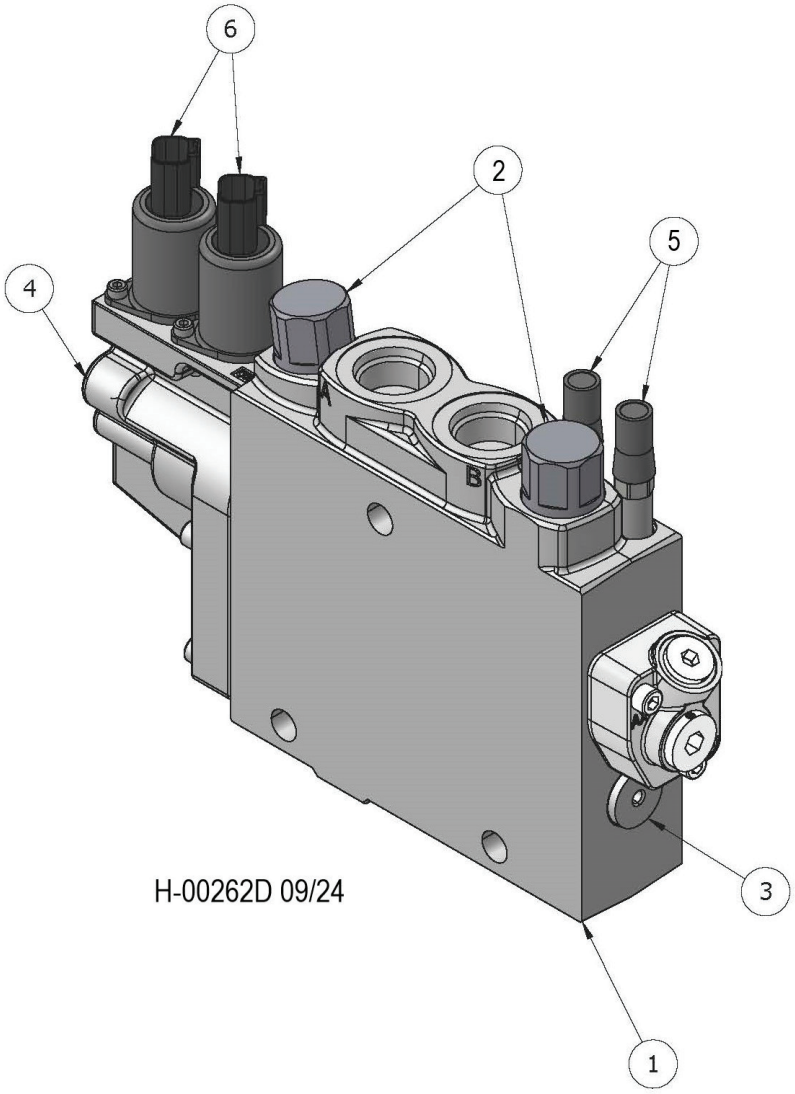

Item	Part #	Description	Qty.
1	20108705	VA300 BUILD PROGRAM WORK SECTION	1
2	19217272	280 BAR WP RELIEF 9120029916	2
3	20106632	K1 COMP KIT VA300	1
4	20099915	KIT EC-CAP COMPLETE U VA450/VA300 ENDCAP W/O STROKE LIMITER	1
5	699170	SUPPLY REDUCER L90-LSR	2
6	696080	SOLENOID VALVE 24VDC ORIFICE 0.8MM DEUTS	2
*	20099965	SPOOL 3AW VA300 LEVEL SPOOL	1
*	20099909	KIT SPRING PACK 6 5-19 BAR STD VA450/VA300 SPRING PACK	1
*	699180	1.00MM PILOT ORIFICE	2

*** MEANS NOT SHOWN)**

H200-00129 - WS300 MAIN VALVE SECTION - OUTLET - (DISC SAW)

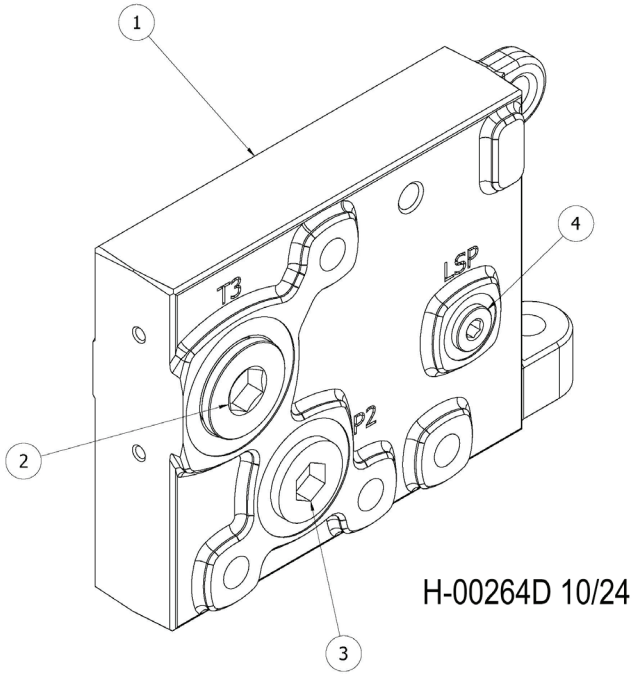

Item	Part #	Description	Qty.
1	20110351	VA300/450 BUILD PROGRAM END SECTION	1
2	19208810	HOLLOW HEX PLUG SAE-ORB	1
3	19207916	HOLLOW HEX PLUG	1
4	19215123	PLUG #6 SAE HOLLOW HEX	1

H200-00130 - MAIN VALVE HYD. FITTINGS - DISC SAW/BAR SAW COMBO (LEVELING) (W450/W300 VALVE)

NOTE: HYDRAULIC FITTINGS GET 545 LOCTITE™

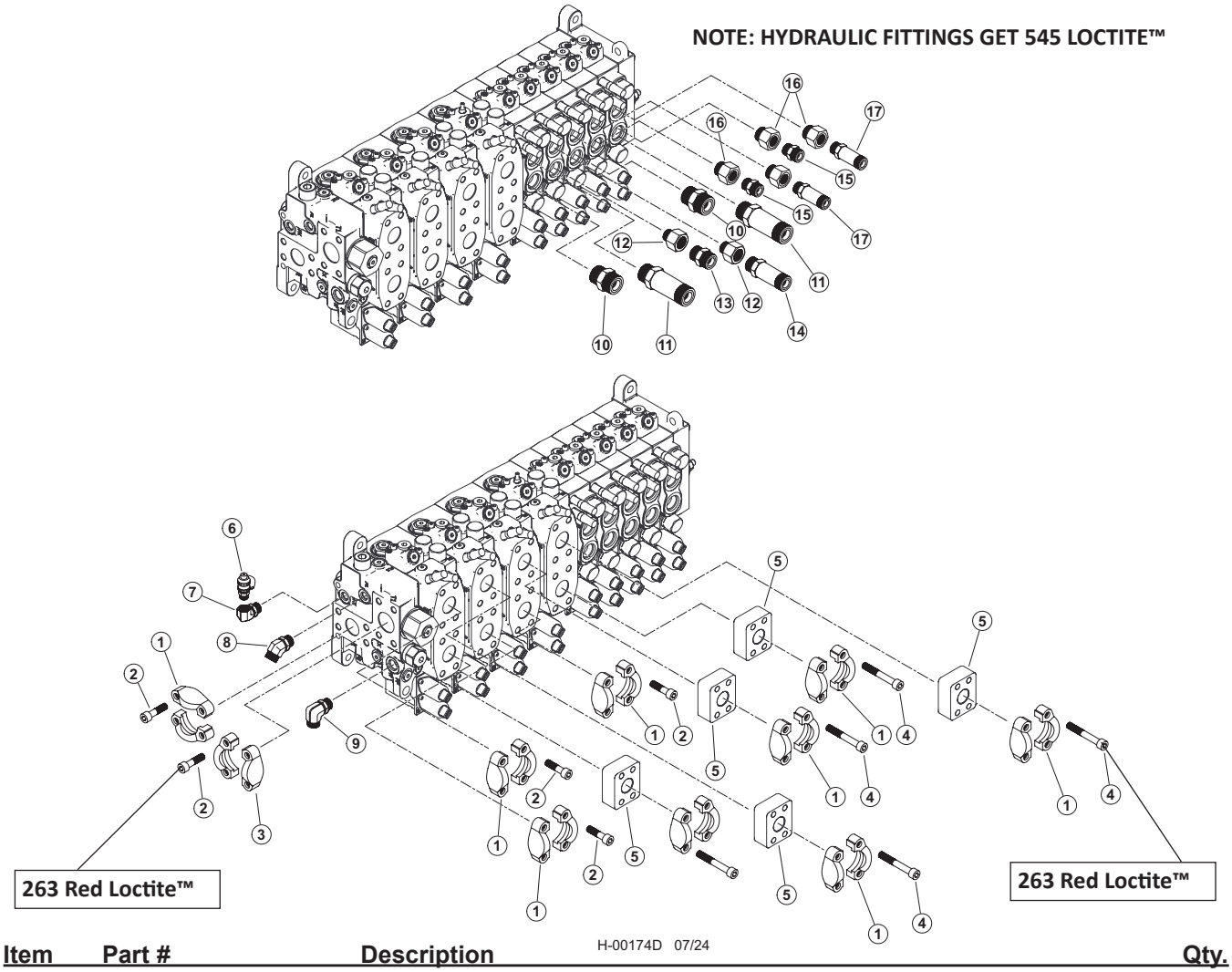

H-00174D 07/24

Item	Part #	Description	Qty.
	53308	VALVE, VA450 - DISC SAW/BAR SAW COMBO (LEVELING)	1
	65975	KIT, HYD FITTING KIT, 450, DISCSAW BASIC	1
	65613	KIT, FITTING DISC LEVEL 450V D-SERIES	1
1	65457	20SFXO & M12 SPLIT FLANGE (CODE 62)	9
2	18988	BOLT, ALLEN HEAD - 12MM-1.75P X 45MM **263 RED LOCTITE™**	20
3	15186	KIT, SPLIT FLANGE - 1.5" (CODE 61)	1
4	59135	BOLT, SHC, 12.9 - M12-1.75P X 80mm **263 RED LOCTITE™**	20
5	65458	ANCHOR-ASX-20GP STANDOFF	5
6	57820	TAP, GAUGE PORT # 6 SAE - Oring Boss	1
7	58348	FITTING, ELBOW 6-AOEG5-5	1
8	23015	ELBOW, 45 - 6 V5OLO-S	1
9	16360	ELBOW, 90 - FF1868T-0808S	1
10	15152	CONNECTOR, STR - FF1852T-1212S	2
11	19092	CONNECTOR, STR LONG - 848L-TTO-12X12	2
12	16358	BUSHING, REDUCER - 6410-12-10	2
13	50039	CONNECTOR, STR - 848-TTO-10X10	1
14	52554	CONNECTOR, STR LONG - 10X10	1
15	15117	CONNECTOR, STR - FF1852T-0808S	2
16	20067	BUSHING, REDUCER - 6410-12-8	4
17	19091	CONNECTOR, STR LONG - 848L-TTO-08X08	2

H200-00140 - MAIN VALVE HYD. FITTINGS - DISC SAW/BAR SAW COMBO (NON-LEVELING) (W450/W300 VALVE)

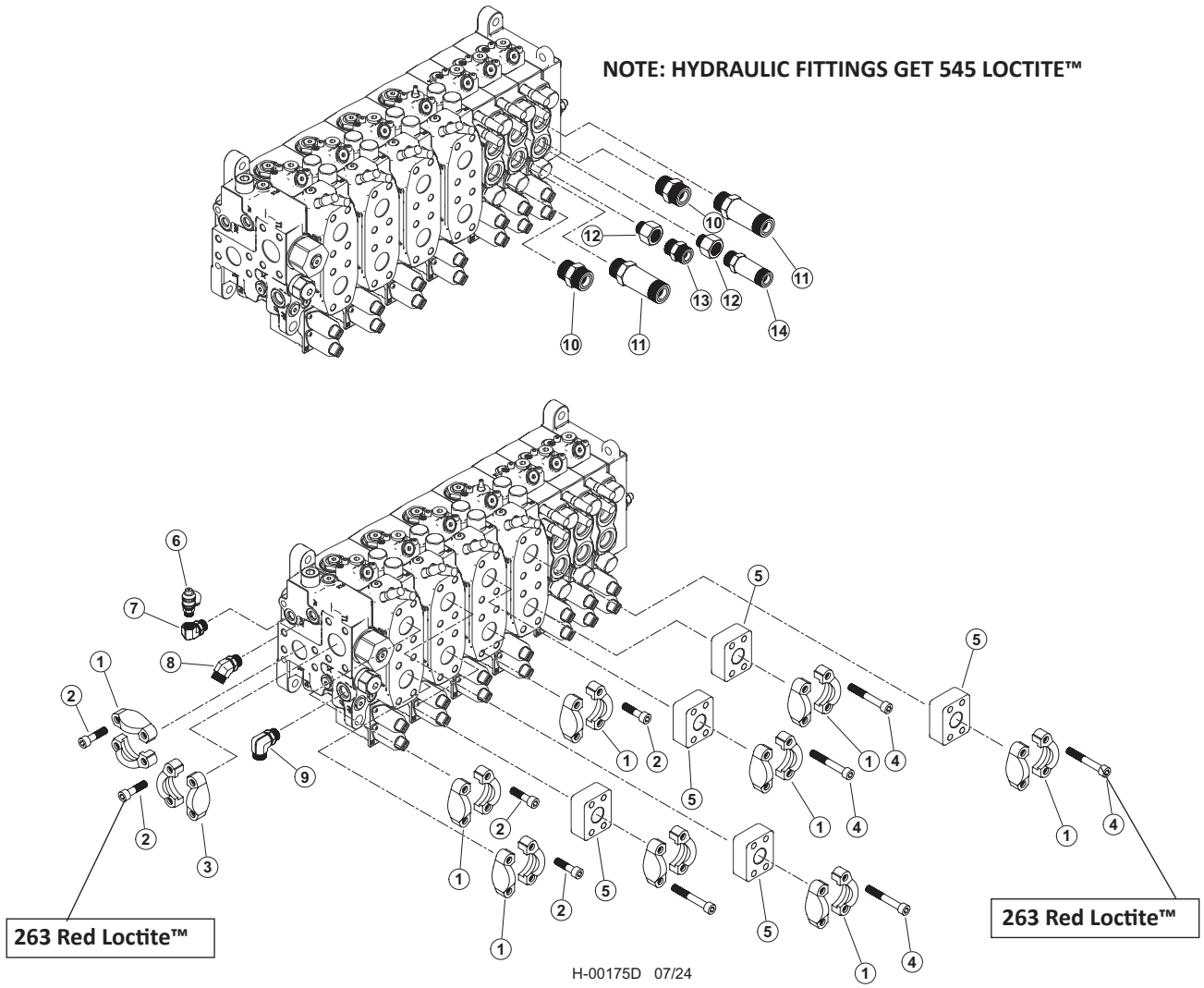

Item	Part #	Description	Qty.
	53334	VALVE, VA450 - DISC SAW/BAR SAW COMBO (NON-LEVELING)	1
	65975	KIT, HYD FITTING KIT, 450, DISCSAW BASIC	1
1	65457	20SFXO & M12 SPLIT FLANGE (CODE 62)	9
2	18988	BOLT, ALLEN HEAD - 12MM-1.75P X 45MM **263 RED LOCTITE™**	20
3	15186	KIT, SPLIT FLANGE - 1.5" (CODE 61)	1
4	59135	BOLT, SHC, 12.9 - M12-1.75P X 80mm **263 RED LOCTITE™**	20
5	65458	ANCHOR-ASX-20GP STANDOFF	5
6	57820	TAP, GAUGE PORT # 6 SAE - Oring Boss	1
7	58348	FITTING, ELBOW 6-AOEG5-5	1
8	23015	ELBOW, 45 - 6 V5OLO-S	1
9	16360	ELBOW, 90 - FF1868T-0808S	1
10	15152	CONNECTOR, STR - FF1852T-1212S	2
11	19092	CONNECTOR, STR LONG - 848L-TTO-12X12	2
12	16358	BUSHING, REDUCER - 6410-12-10	2
13	50039	CONNECTOR, STR - 848-TTO-10X10	1
14	52554	CONNECTOR, STR LONG - 10X10	1

H200-00141 - W450 MAIN VALVE SECTION - INLET - (DISC SAW / BAR SAW COMBO)

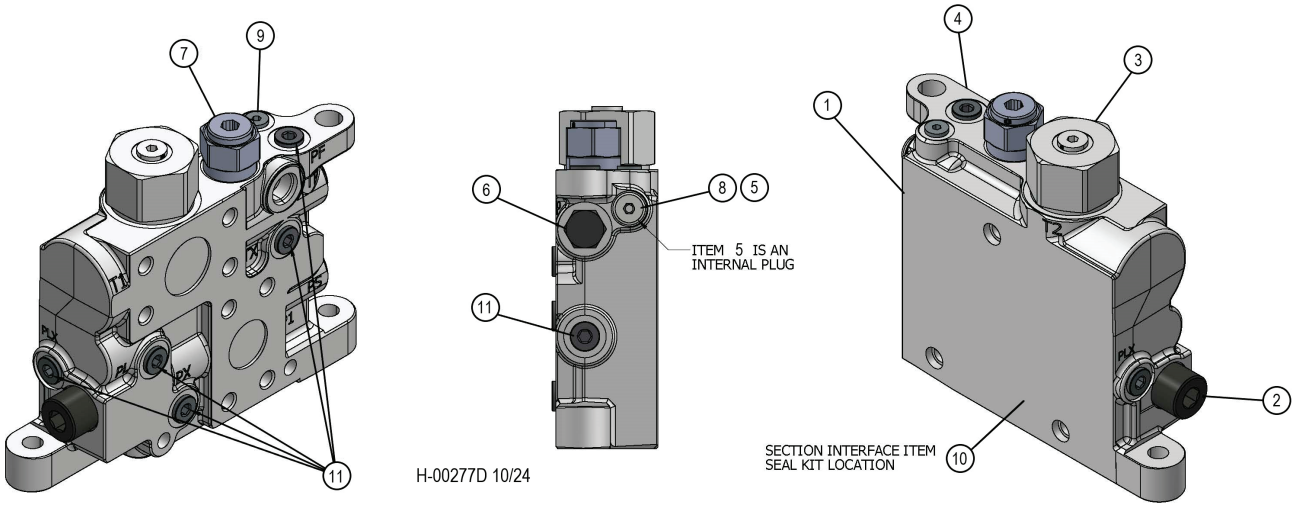

Item	Part #	Description	Qty.
1	20106626	VA450 INLET	1
2	19217256	PLC182-330-20 RELIEF MAIN R/V 330 BAR 4785 PSI	1
3	20106606	MF5 COUNTER PRESSURE VALVE 6764842	1
4	20110560	VA450 BLANK INLET SECTION LSB450	1
5	20110554	TP INTERNAL PLUG	1
6	19220867	CHECK CART C08-2 STD 3PSI	1
7	20090649	VA300/450 REDUCING VALVE R35	1
8	20110562	PLUG 14MM X 1.5 METRIC	1
9	19213753	HOLLOW HEX PLUG SAE-ORB	1
10	20089696	SEAL KIT VA300 & VA450 INTERSECT	1
11	19215123	PLUG #6 SAE HOLLOW HEX	6

H200-00142 - W450 MAIN VALVE SECTION - TOOL TILT - (DISC SAW / BAR SAW COMBO)

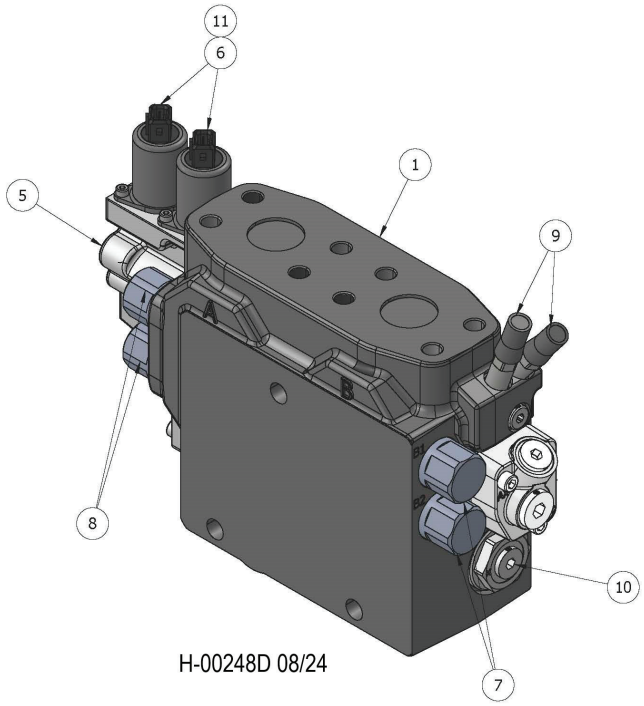

H-00248D 08/24

Item	Part #	Description	Qty.
1	20101977	VA450 BUILD PROGRAM WORK SECTION	1
*	20099960	SPOOL 4AC VA450 HEEL/TOOL TILT SPOOL	1
*	699200	KIT SPRING PACK 6.5-19 BAR STD VA450	1
*	20107604	KIT B-SIDE COVER, U/U VA450/VA300 CAP B W/ #8 SAE PLUG	1
5	20099915	KIT EC-CAP COMPLETE U VA450/VA300 ENDCAP W/O STROKE LIMITER	1
6	699190	24 VDC SOLENOID AMP W ORIFICE 0.8 MM	2
7	19217273	300 BAR PORT RELIEF VALVE 9120029917	2
8	56472	K220-WPRV-330 330 BAR PORT RELIEF VALVE	2
9	699170	SUPPLY REDUCER L90-LSR	2
10	55734	COMPENSATOR, MAIN-TOOL-STK- 450 VALVE	1
11	699180	1.00MM PILOT ORIFICE	2

***MEANS NOT SHOWN**

H200-00143 - W450 MAIN VALVE SECTION - STICK BOOM (DISC SAW / BAR SAW COMBO)

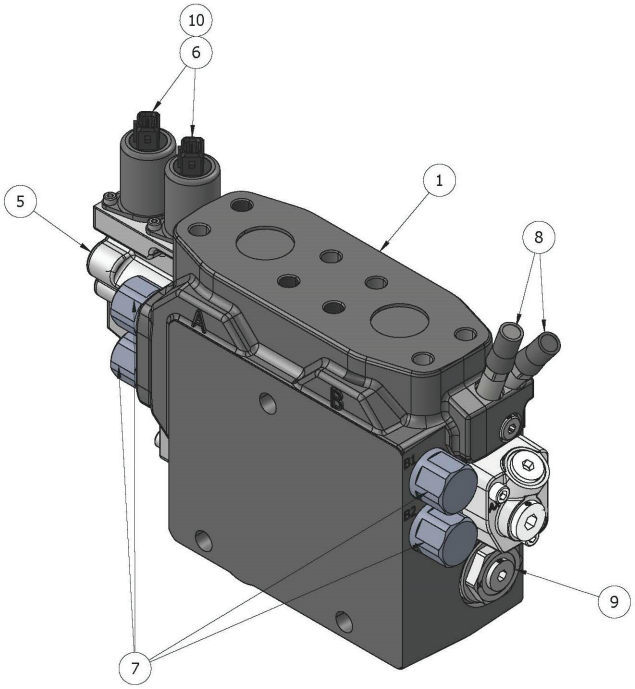

H-00249D 08/24

Item	Part #	Description	Qty.
1	20108694	VA450 BUILD PROGRAM WORK SECTION	1
*	20099958	SPOOL 4AA VA450 STICK SPOOL	1
*	699200	KIT SPRING PACK 6.5-19 BAR STD VA450	1
*	20107604	KIT B-SIDE COVER, U/U VA450/VA300 CAP B W/ #8 SAE PLUG	1
5	20099915	KIT EC-CAP COMPLETE U VA450/VA300 ENDCAP W/O STROKE LIMITER	1
6	699190	24 VDC SOLENOID AMP W ORIFICE 0.8 MM	2
7	56161	RELIEF - 19215623	4
8	699170	SUPPLY REDUCER L90-LSR	2
9	55734	COMPENSATOR, MAIN-TOOL-STK- 450 VALVE	1
10	699180	1.00MM PILOT ORIFICE0	2

***MEANS NOT SHOWN**

H200-00144 - W450 MAIN VALVE SECTION - MAIN BOOM (DISC SAW / BAR SAW COMBO)

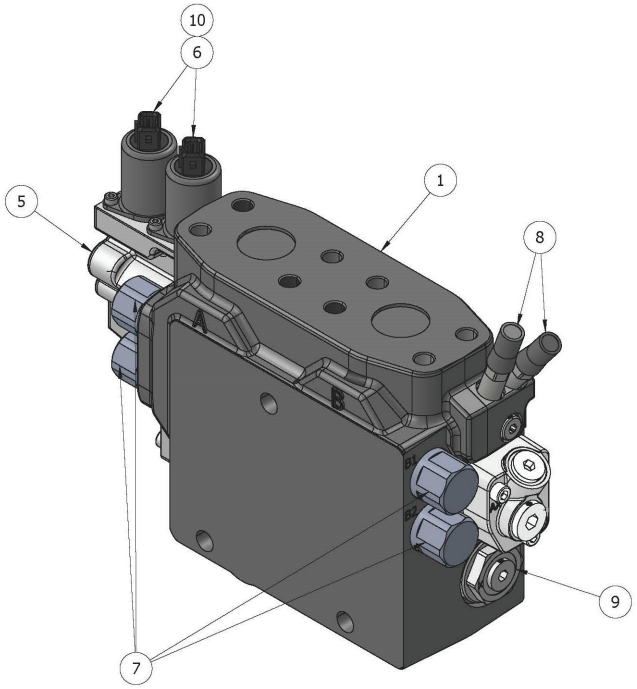

H-00249D 08/24

Item	Part #	Description	Qty.
1	20108696	VA450 BUILD PROGRAM WORK SECTION	1
*	57318	SPOOL, 4AB VA450 HOIST SPOOL	1
*	699200	KIT SPRING PACK 6.5-19 BAR STD VA450	1
*	20107604	KIT B-SIDE COVER, U/U VA450/VA300 CAP B W/ #8 SAE PLUG	1
5	20099915	KIT EC-CAP COMPLETE U VA450/VA300 ENDCAP W/O STROKE LIMITER	1
6	699190	24 VDC SOLENOID AMP W ORIFICE 0.8 MM	2
7	56161	RELIEF - 19215623	4
8	699170	SUPPLY REDUCER L90-LSR	2
9	55734	COMPENSATOR, MAIN-TOOL-STK- 450 VALVE	1
10	699180	1.00MM PILOT ORIFICE0	2

***MEANS NOT SHOWN**

H200-00145 - W450 MAIN VALVE SECTION - SAW - (DISC SAW / BAR SAW COMBO)

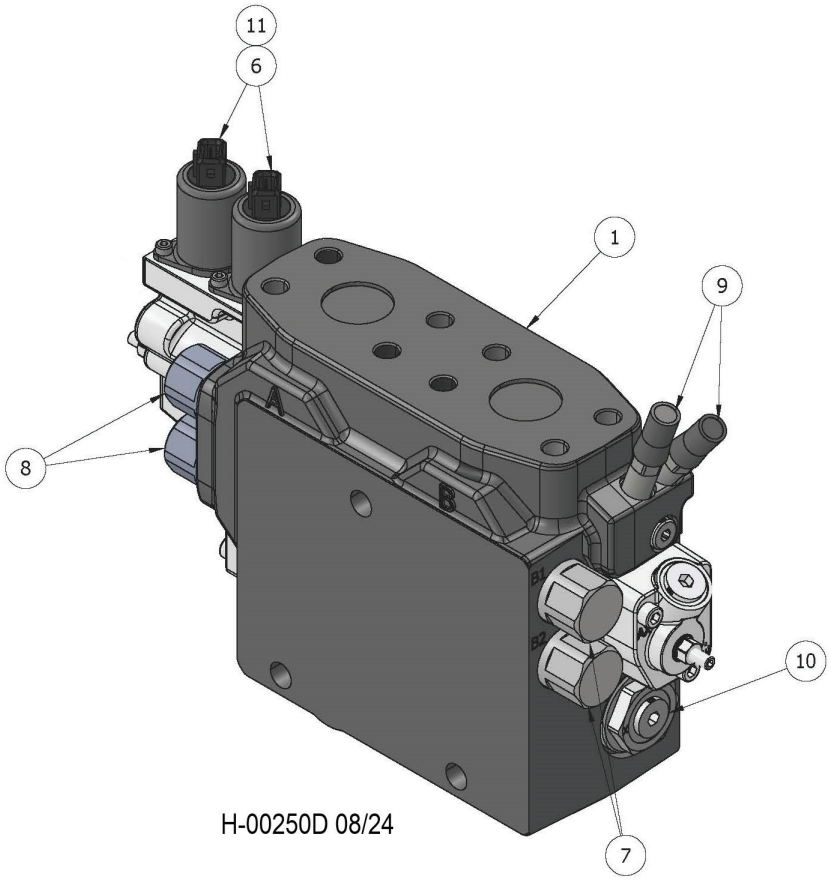

Item	Part #	Description	Qty.
1	20108702	VA450 BUILD PROGRAM WORK SECTION	1
*	20099963	SPOOL 4AE VA450 SAW SPOOL	1
*	699200	KIT SPRING PACK 6.5-19 BAR STD VA450	1
*	53385	KIT, B-SIDE - COVER 450/300	1
*	20099916	KIT EC-CAP COMPLETE U/M6 VA450/VA300 END CAP A W/ STROKE LIMITER	1
6	699190	24 VDC SOLENOID AMP W ORIFICE 0.8 MM	2
7	56051	PLC185-380-20 A014 KSERI 6760874	2
8	56472	K220-WPRV-330 330 BAR PORT RELIEF VALVE	2
9	699170	SUPPLY REDUCER L90-LSR	2
10	55734	COMPENSATOR, MAIN-TOOL-STK- 450 VALVE	1
11	699180	1.00MM PILOT ORIFICE	2

***MEANS NOT SHOWN**

H200-00146 - WS300 MAIN VALVE SECTION - ACCUMULATOR (DISC SAW / BAR SAW COMBO)

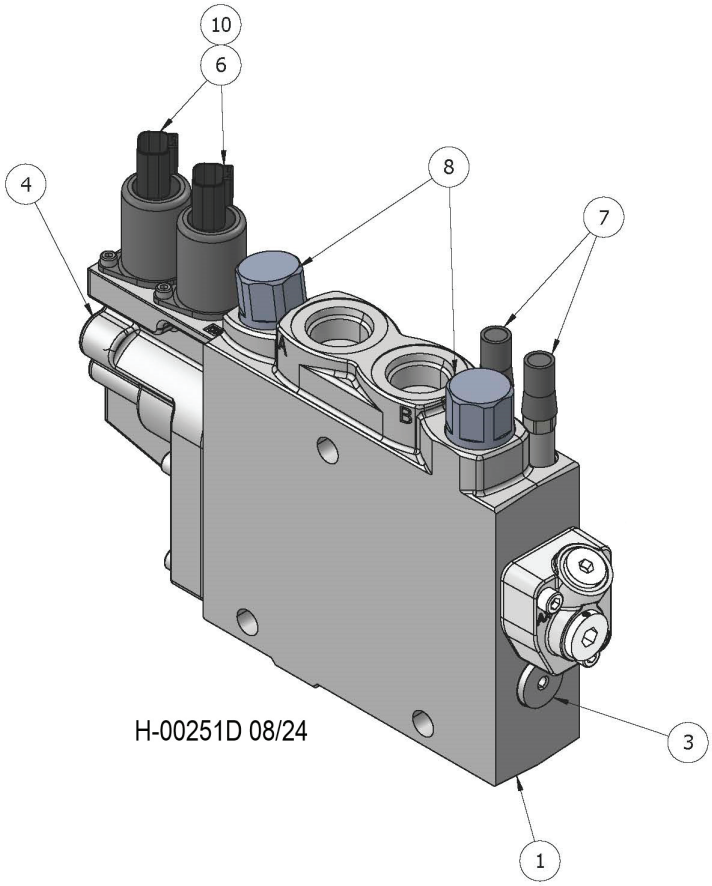

Item	Part #	Description	Qty.
1	20108703	VA300 BUILD PROGRAM WORK SECTION	1
*	53387	SPOOL, VA300, 3AR	1
3	20106632	K1 COMP KIT VA300	1
*	20099915	KIT EC-CAP COMPLETE U VA450/VA300 ENDCAP W/O STROKE LIMITER	1
*	20107604	KIT B-SIDE COVER, U/U VA450/VA300 CAP B W/ #8 SAE PLUG	1
6	696080	SOLENOID VALVE 24VDC ORIFICE 0.8MM DEUTS	2
7	699170	SUPPLY REDUCER L90-LSR	2
8	9217273	300 BAR PORT RELIEF VALVE 9120029917	2
9	20099909	KIT SPRING PACK 6 5-19 BAR STD VA450/VA300 SPRING PACK	1
10	699180	1.00MM PILOT ORIFICE	2

***MEANS NOT SHOWN**

H200-00147 - WS300 MAIN VALVE SECTION - ROTATE - (DISC SAW / BAR SAW COMBO)

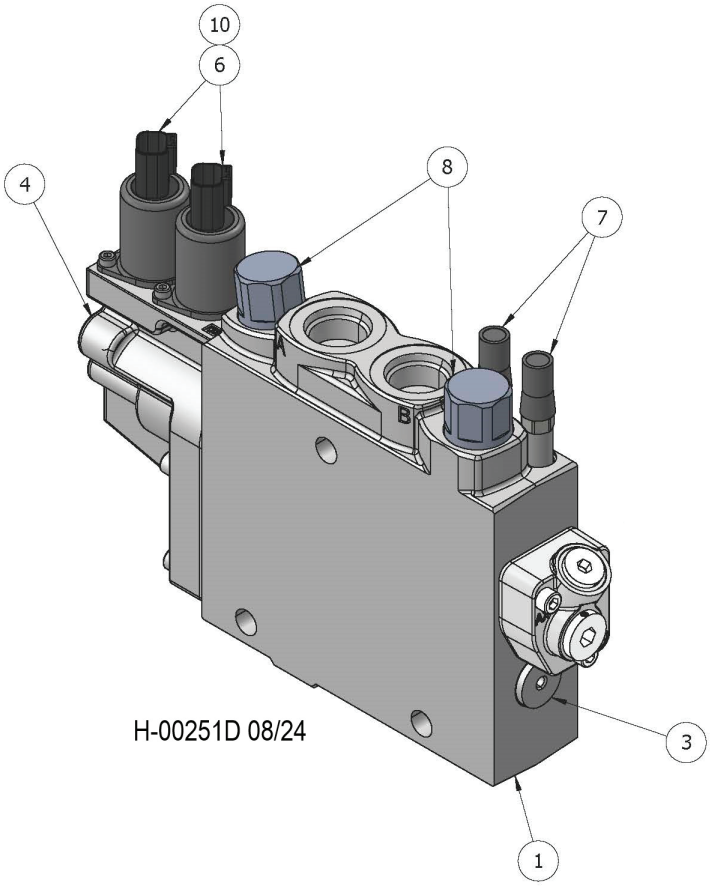

Item	Part #	Description	Qty.
1	20108704	VA300 BUILD PROGRAM WORK SECTION	1
*	53387	SPOOL, VA300, 3AR	1
3	20106632	K1 COMP KIT VA300	1
*	20099915	KIT EC-CAP COMPLETE U VA450/VA300 ENDCAP W/O STROKE LIMITER	1
*	20107604	KIT B-SIDE COVER, U/U VA450/VA300 CAP B W/ #8 SAE PLUG	1
6	696080	SOLENOID VALVE 24VDC ORIFICE 0.8MM DEUTS	2
7	699170	SUPPLY REDUCER L90-LSR	2
8	19217272	280 BAR WP RELIEF 9120029916	2
9	20099909	KIT SPRING PACK 6 5-19 BAR STD VA450/VA300 SPRING PACK	1
10	699180	1.00MM PILOT ORIFICE	2

***MEANS NOT SHOWN**

H200-00148 - WS300 MAIN VALVE SECTION - CLAMP - (DISC SAW / BAR SAW COMBO)

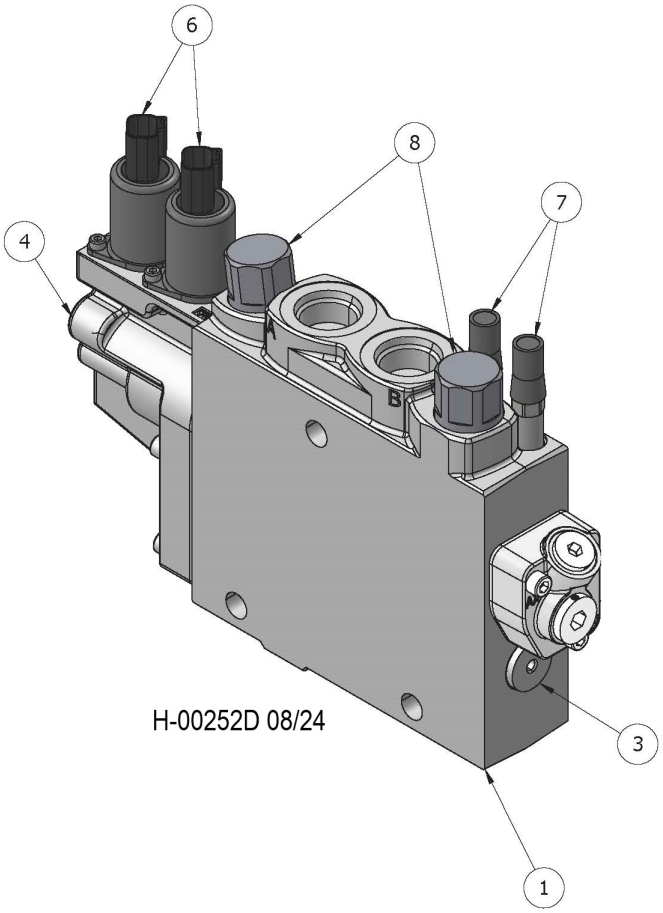

Item	Part #	Description	Qty.
1	20108703	VA300 BUILD PROGRAM WORK SECTION	1
*	53387	SPOOL, VA300, 3AR	1
3	20106632	K1 COMP KIT VA300	1
*	20099915	KIT EC-CAP COMPLETE U VA450/VA300 ENDCAP W/O STROKE LIMITER	1
*	20107604	KIT B-SIDE COVER, U/U VA450/VA300 CAP B W/ #8 SAE PLUG	1
6	696080	SOLENOID VALVE 24VDC ORIFICE 0.8MM DEUTS	2
7	699170	SUPPLY REDUCER L90-LSR	2
8	9217273	300 BAR PORT RELIEF VALVE 9120029917	2
9	20099909	KIT SPRING PACK 6 5-19 BAR STD VA450/VA300 SPRING PACK	1
10	699180	1.00MM PILOT ORIFICE	2

***MEANS NOT SHOWN**

H200-00149 - WS300 MAIN VALVE SECTION - CAB LEVEL (DISC SAW / BAR SAW COMBO)

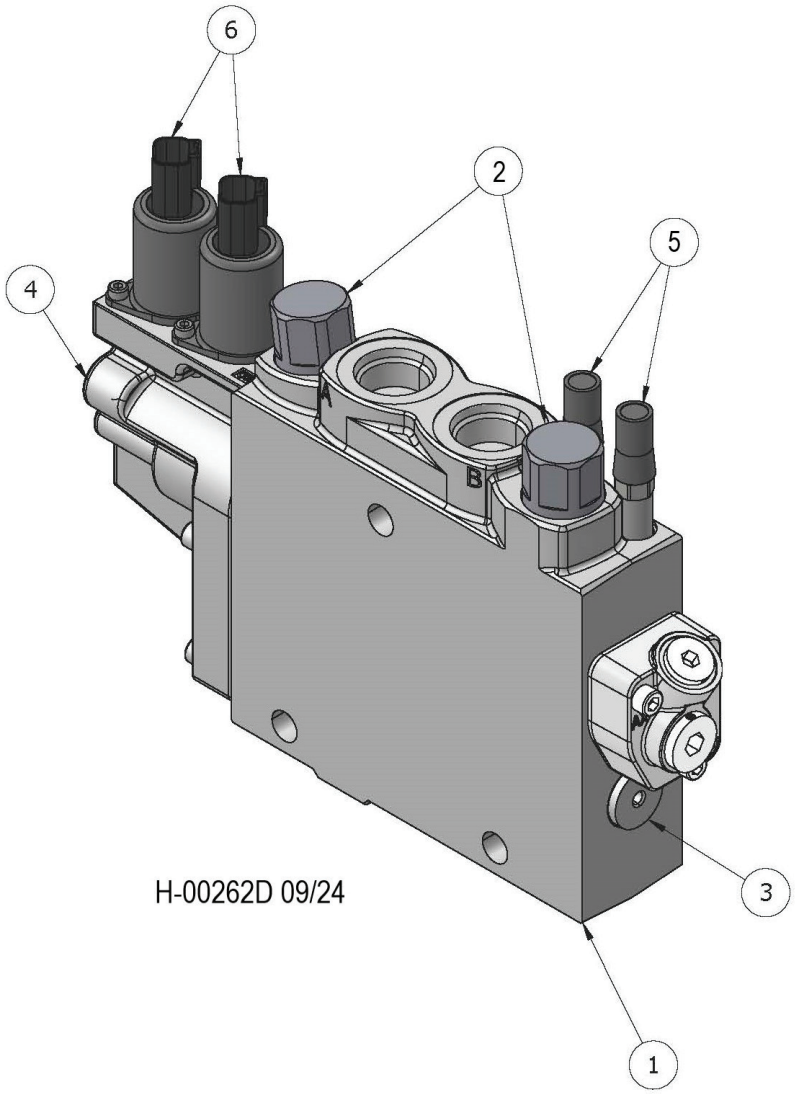

Item	Part #	Description	Qty.
1	20108705	VA300 BUILD PROGRAM WORK SECTION	1
2	19217272	280 BAR WP RELIEF 9120029916	2
3	20106632	K1 COMP KIT VA300	1
4	20099915	KIT EC-CAP COMPLETE U VA450/VA300 ENDCAP W/O STROKE LIMITER	1
5	699170	SUPPLY REDUCER L90-LSR	2
6	696080	SOLENOID VALVE 24VDC ORIFICE 0.8MM DEUTS	2
*	20099965	VA300 LEVEL 3AW SPOOL	1
*	20099909	KIT SPRING PACK 6 5-19 BAR STD VA450/VA300 SPRING PACK	1
*	699180	1.00MM PILOT ORIFICE	2

***MEANS NOT SHOWN**

H200-00150 - WS300 MAIN VALVE SECTION - OUTLET - (DISC SAW / BAR SAW COMBO)

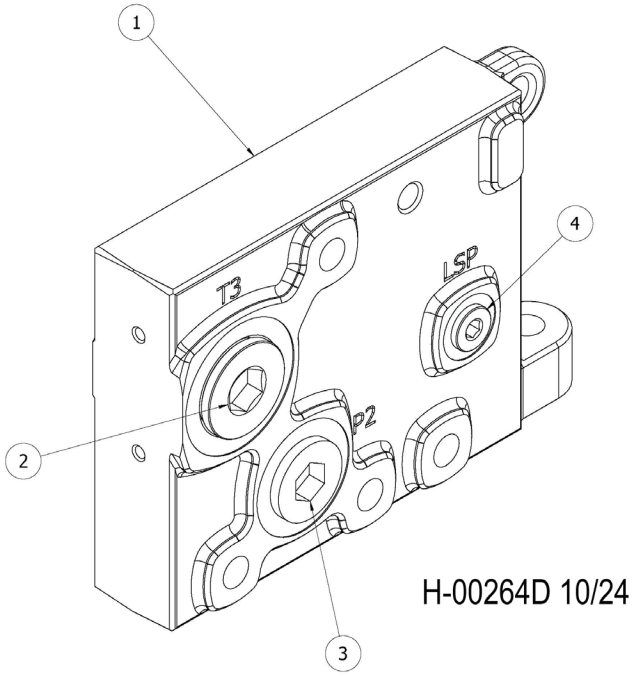

Item	Part #	Description	Qty.
1	20110351	VA300/450 BUILD PROGRAM END SECTION	1
2	19208810	HOLLOW HEX PLUG SAE-ORB	1
3	19207916	HOLLOW HEX PLUG	1
4	19215123	PLUG #6 SAE HOLLOW HEX	1

H200-00160 - BOOM PLATE HYD. FITTINGS - DISC SAW & PROCESSOR ATTACHMENTS (W450/W300 VALVE)

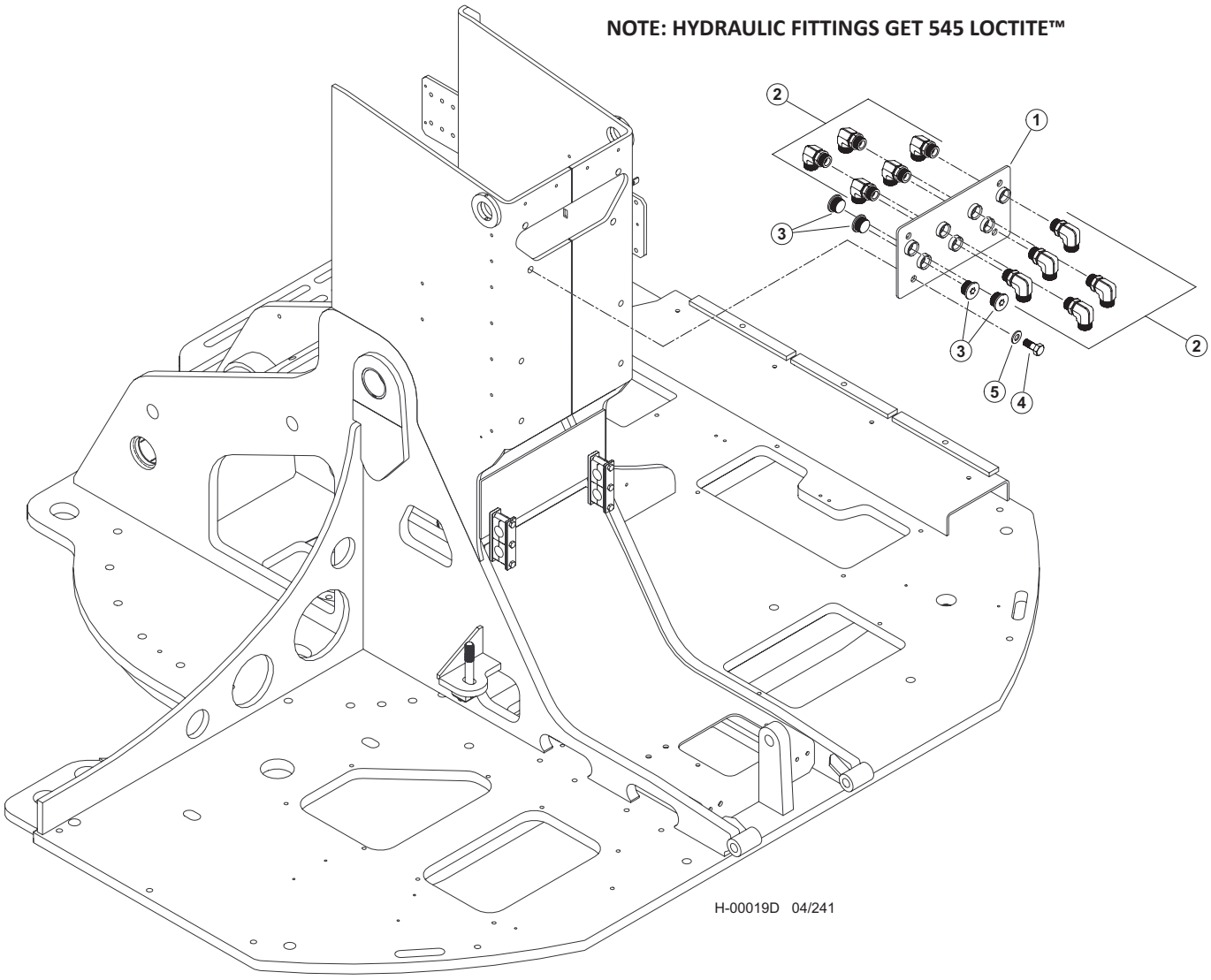

Item	Part #	Description	Qty.
	65882	KIT, HYD FITTING, BH, DISCSAW BASIC	1
1	60278	WELDMENT, BUNCHER BOOM BH PLATE	1
2	15528	ELBOW, 90 - FF1868T-1616S	10
3	19847	PLUG - 6408-HHP-16	4
4	10739	BOLT - .5” X 1.5”	4
5	10804	WASHER, FLAT - .5”	4

H200-00170 - MAIN VALVE HYD. FITTINGS - CONTROL FALL PROCESSOR (LEVELING) (W450/W300 VALVE)

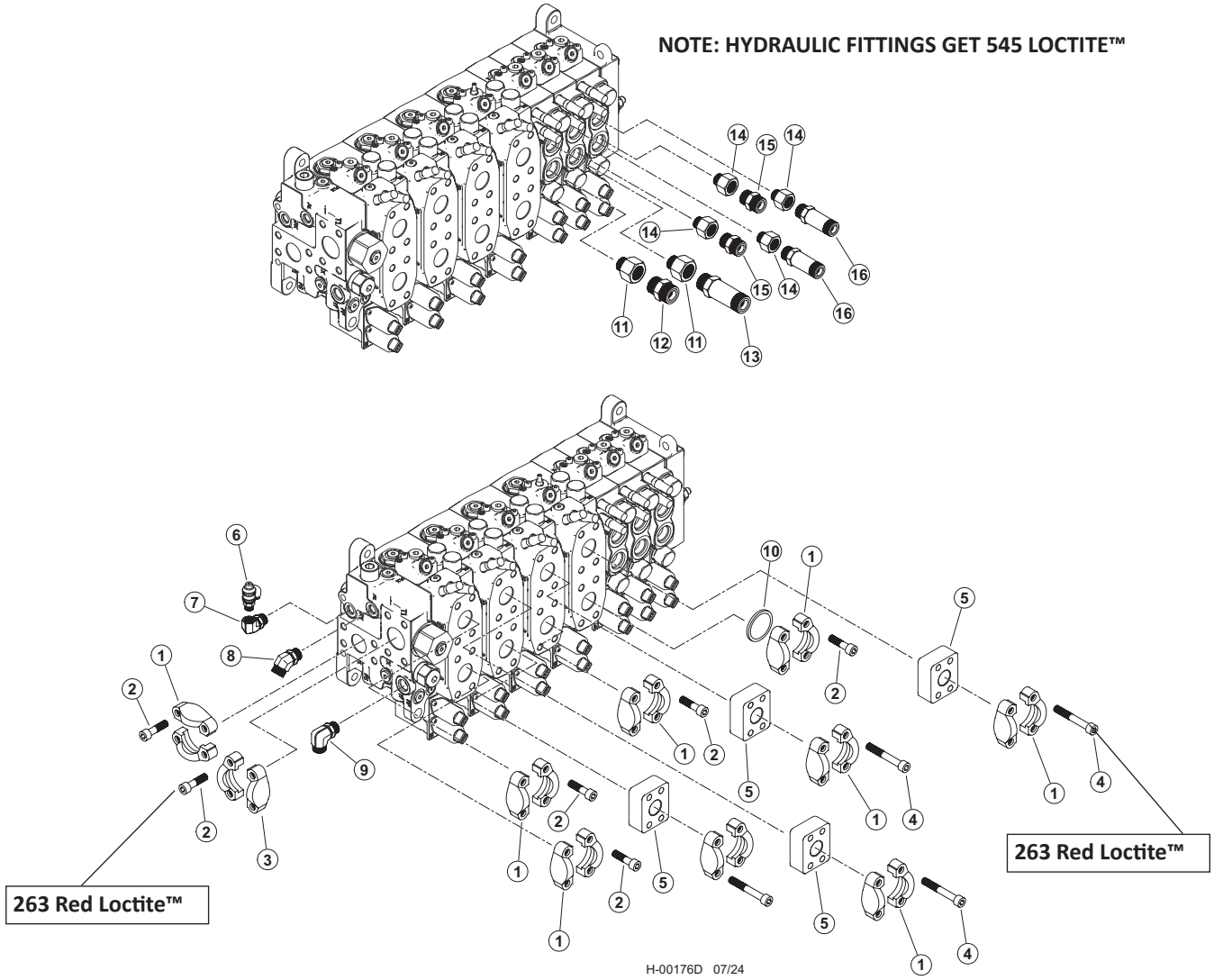

Item	Part #	Description	Qty.
	53322	VALVE, VA450 - CONTROL FALL PROCESSOR (LEVELING)	1
	65975	KIT, HYD FITTING KIT, 450, DISCSAW BASIC	1
	65613	KIT, FITTING DISC LEVEL 450V D-SERIES	1
1	65457	20SFXO & M12 SPLIT FLANGE (CODE 62)	9
2	18988	BOLT, ALLEN HEAD - 12MM-1.75P X 45MM **263 RED LOCTITE™**	24
3	15186	KIT, SPLIT FLANGE - 1.5” (CODE 61)	1
4	59135	BOLT, SHC, 12.9 - M12-1.75P X 80mm **263 RED LOCTITE™**	16
5	65458	ANCHOR-ASX-20GP STANDOFF	4
6	57820	TAP, GAUGE PORT # 6 SAE - Oring Boss	1
7	58348	FITTING, ELBOW 6-AOEG5-5	1
8	23015	ELBOW, 45 - 6 V5OLO-S	1
9	16360	ELBOW, 90 - FF1868T-0808S	1
10	58423	PLUG - SPLIT FLANGE CODE 62 20PQ2	1
11	16358	BUSHING, REDUCER - 6410-12-10	2
12	50039	CONNECTOR, STR - 848-TTO-10X10	1
13	52554	CONNECTOR, STR LONG - 10X10	1
14	20067	BUSHING, REDUCER - 6410-12-8	4
15	15117	CONNECTOR, STR - FF1852T-0808S	2
16	19091	CONNECTOR, STR LONG - 848L-TTO-08X08	2

H200-00180 - MAIN VALVE HYD. FITTINGS - CONTROL FALL PROCESSOR (NON-LEVELING) (W450/W300 VALVE)

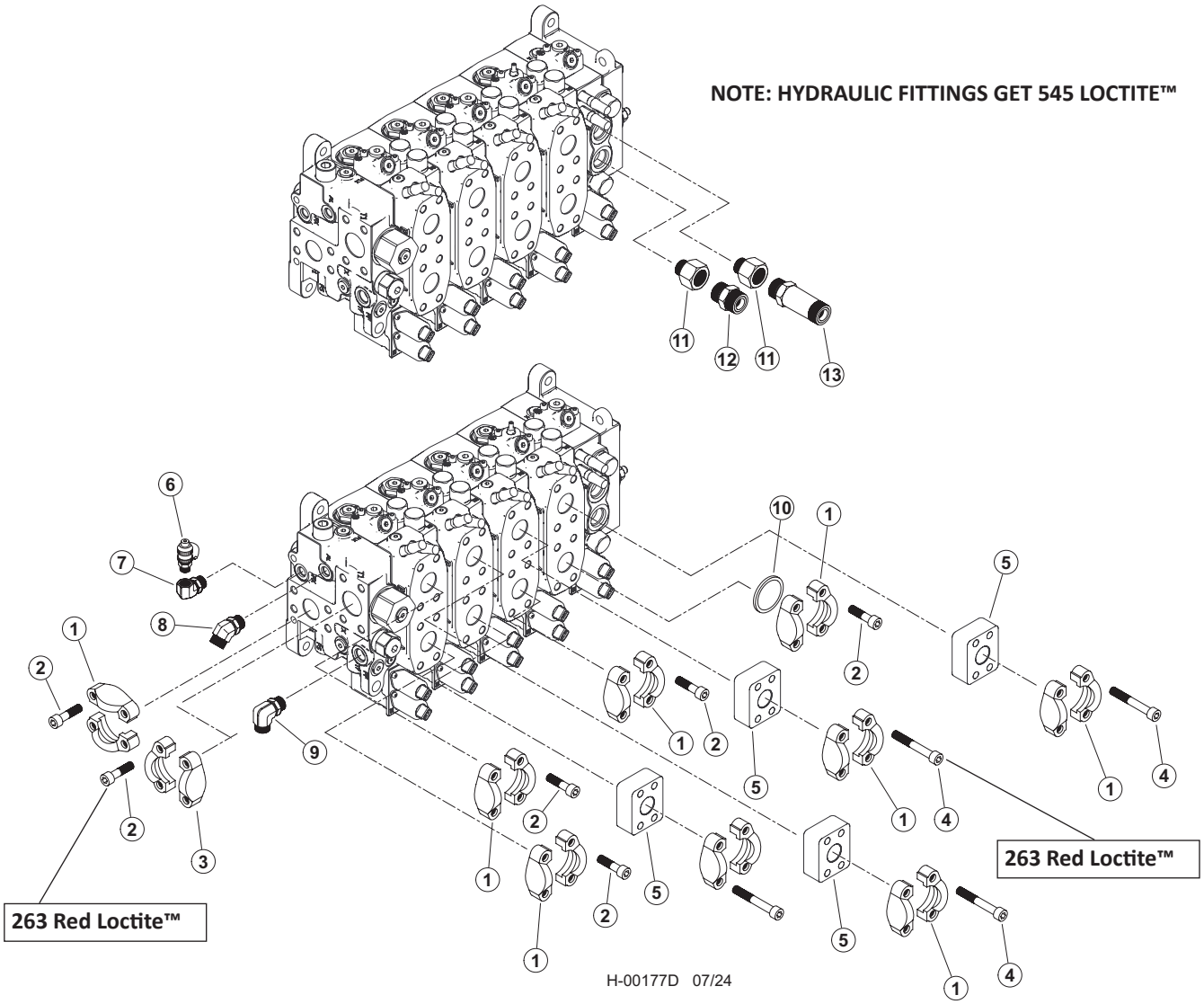

Item	Part #	Description	Qty.
	53330	VALVE, VA450 - CONTROL FALL PROCESSOR (NON-LEVELING)	1
	65975	KIT, HYD FITTING KIT, 450, DISCSAW BASIC	1
	65613	KIT, FITTING DISC LEVEL 450V D-SERIES	1
1	65457	20SFXO & M12 SPLIT FLANGE (CODE 62)	9
2	18988	BOLT, ALLEN HEAD - 12MM-1.75P X 45MM **263 RED LOCTITE™**	24
3	15186	KIT, SPLIT FLANGE - 1.5" (CODE 61)	1
4	59135	BOLT, SHC, 12.9 - M12-1.75P X 80mm **263 RED LOCTITE™**	16
5	65458	ANCHOR-ASX-20GP STANDOFF	4
6	57820	TAP, GAUGE PORT # 6 SAE - Oring Boss	1
7	58348	FITTING, ELBOW 6-AOEG5-5	1
8	23015	ELBOW, 45 - 6 V5OLO-S	1
9	16360	ELBOW, 90 - FF1868T-0808S	1
10	58423	PLUG - SPLIT FLANGE CODE 62 20PQ2	1
11	16358	BUSHING, REDUCER - 6410-12-10	2
12	50039	CONNECTOR, STR - 848-TTO-10X10	1
13	52554	CONNECTOR, STR LONG - 10X10	1

H200-00181 - W450 MAIN VALVE SECTION - INLET - (CONTROL FALL PROCESSOR)

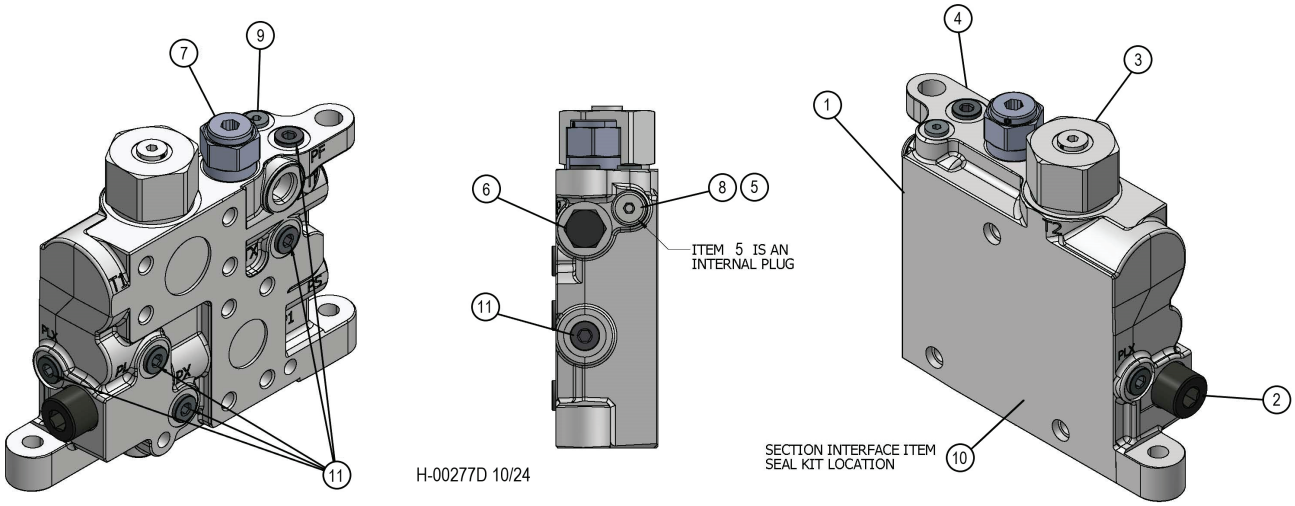

Item	Part #	Description	Qty.
1	20106626	VA300/450 BUILD PROGRAM INLET	1
2	19217256	PLC182-330-20 RELIEF MAIN R/V 330 BAR 4785 PSI	1
3	20106606	MF5 COUNTER PRESSURE VALVE 6764842	1
4	20110560	VA450 BLANK INLET SECTION LSB450	1
5	20110554	TP INTERNAL PLUG	1
6	19220867	CHECK CART C08-2 STD 3PSI	1
7	20090649	VA300/450 REDUCING VALVE R35	1
8	20110562	PLUG 14MM X 1.5 METRIC	1
9	19213753	HOLLOW HEX PLUG SAE-ORB	1
10	20089696	SEAL KIT VA300 & VA450 INTERSECT	1
11	19215123	PLUG #6 SAE HOLLOW HEX	6

H200-00182 - W450 MAIN VALVE SECTION - TOOL TILT - (CONTROL FALL PROCESSOR)

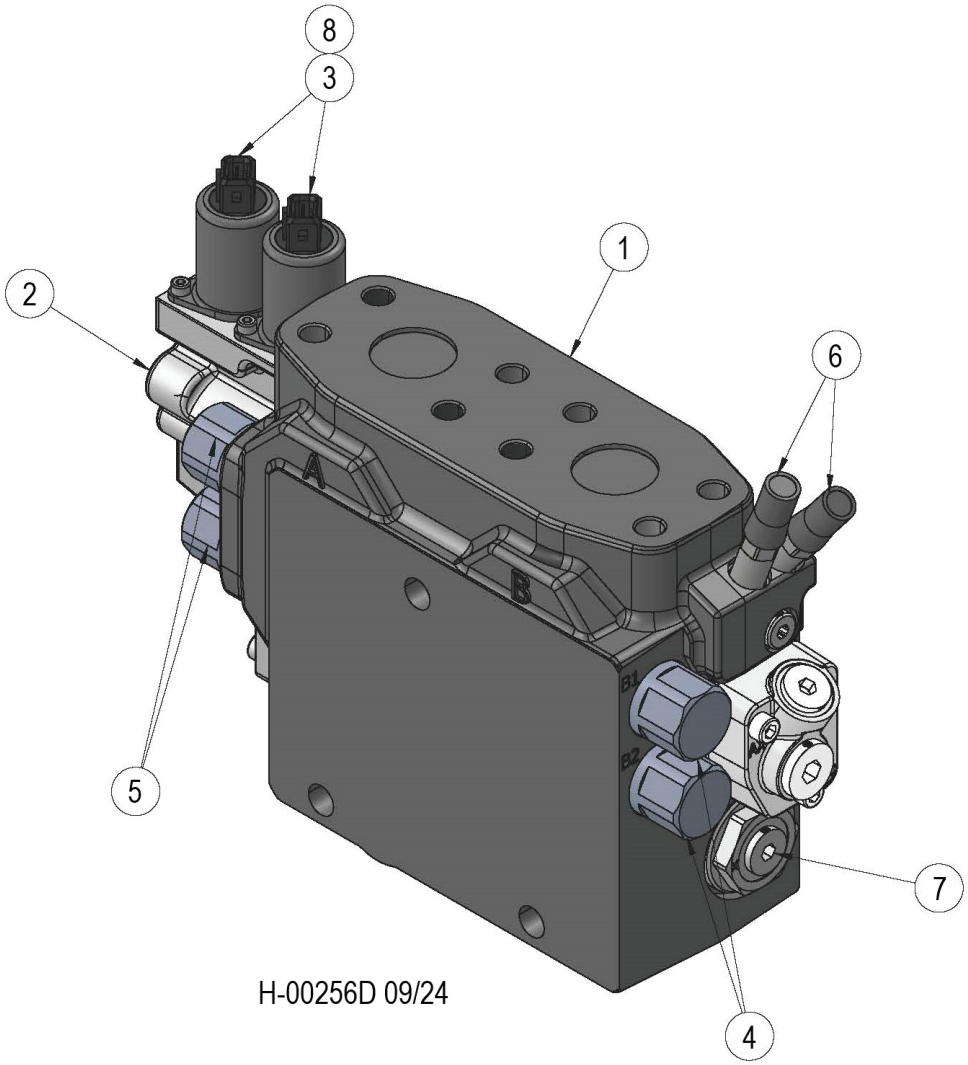

H-00256D 09/24

Item	Part #	Description	Qty.
1	20108690	VA450 BUILD PROGRAM WORK SECTION	1
2	20099915	KIT EC-CAP COMPLETE U VA450/VA300 ENDCAP W/O STROKE LIMITER	1
3	699190	24 VDC SOLENOID AMP W ORIFICE 0.8 MM	2
4	19217273	300 BAR PORT RELIEF VALVE 9120029917	2
5	56472	K220-WPRV-330 330 BAR PORT RELIEF VALVE	2
6	699170	SUPPLY REDUCER L90-LSR	2
7	55734	COMPENSATOR, MAIN-TOOL-STK- 450 VALVE	1
8	699180	1.00MM PILOT ORIFICE	2
*	20099960	SPOOL 4AC VA450 HEEL/TOOL TILT SPOOL	1
*	699200	KIT SPRING PACK 6.5-19 BAR STD VA450	1
*	20107604	KIT B-SIDE COVER, U/U VA450/VA300 CAP B W/ #8 SAE PLUG	1

H200-00183 - W450 MAIN VALVE SECTION - STICK BOOM - (CONTROL FALL PROCESSOR)

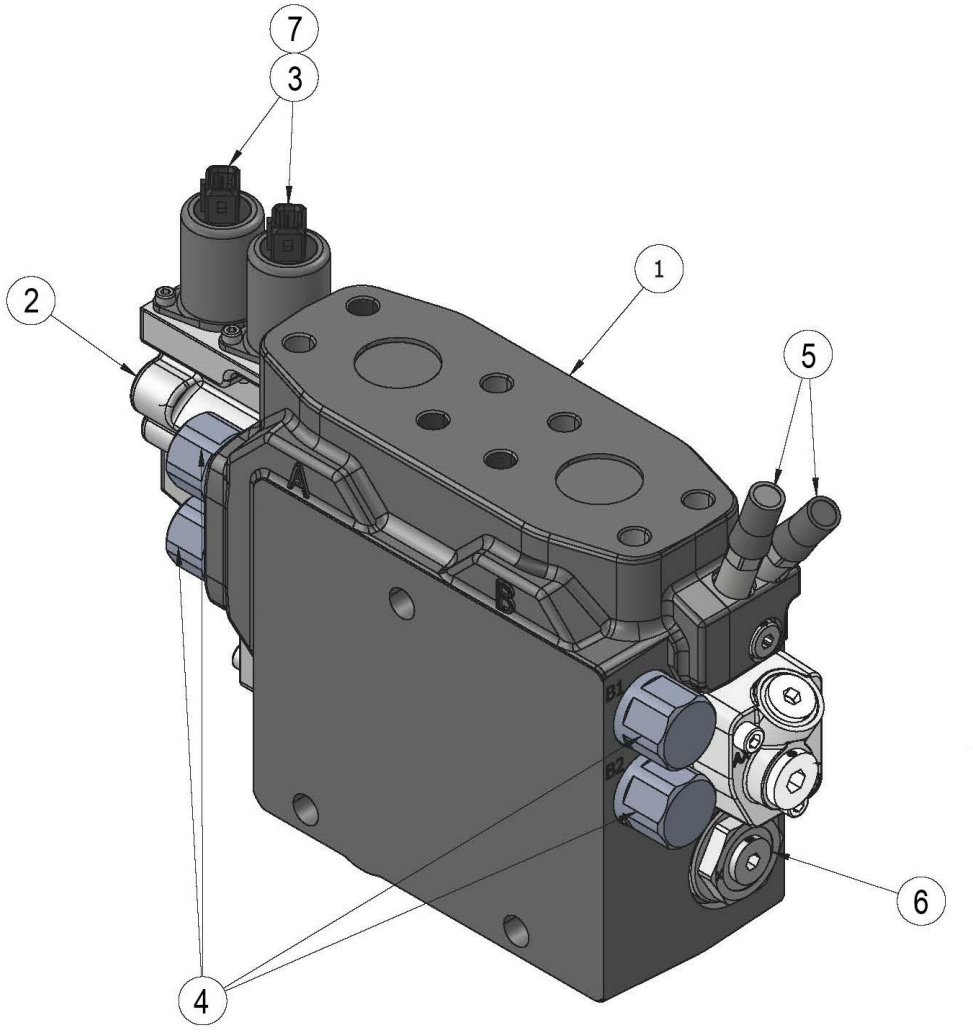

H-00257D 09/24

Item	Part #	Description	Qty.
1	20108694	VA450 BUILD PROGRAM WORK SECTION	1
2	20099915	KIT EC-CAP COMPLETE U VA450/VA300 ENDCAP W/O STROKE LIMITER	1
3	699190	24 VDC SOLENOID AMP W ORIFICE 0.8 MM	2
4	56161	RELIEF - 19215623	4
5	699170	SUPPLY REDUCER L90-LSR	2
6	55734	COMPENSATOR, MAIN-TOOL-STK- 450 VALVE	1
7	699180	1.00MM PILOT ORIFICE	2
*	20099958	VA450 STICK 4AA SPOOL	1
*	699200	KIT SPRING PACK 6.5-19 BAR STD VA450	1
*	20107604	KIT B-SIDE COVER, U/U VA450/VA300 CAP B W/ #8 SAE PLUG	1

H200-00184 - W450 MAIN VALVE SECTION - MAIN BOOM - (CONTROL FALL PROCESSOR)

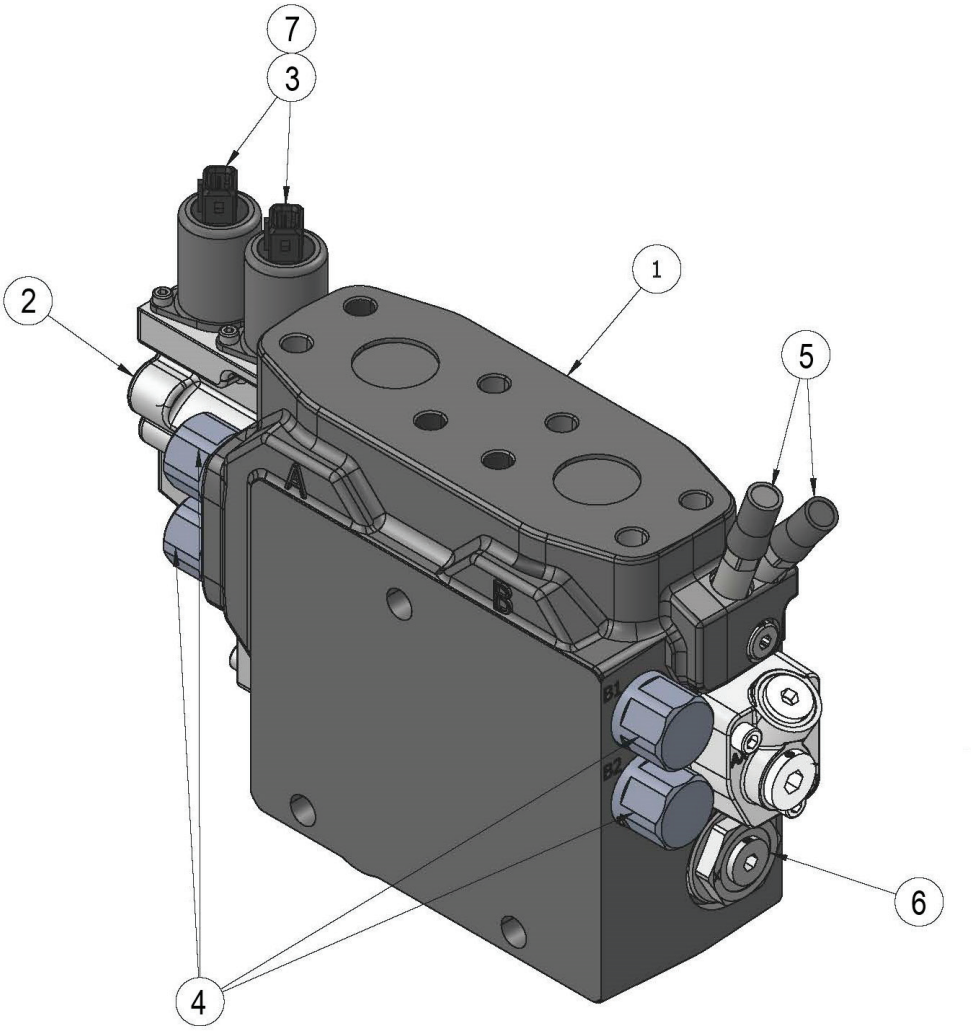

H-00257D 09/24

Item	Part #	Description	Qty.
1	20108696	VA450 BUILD PROGRAM WORK SECTION	1
2	20099915	KIT EC-CAP COMPLETE U VA450/VA300 ENDCAP W/O STROKE LIMITER	1
3	699190	24 VDC SOLENOID AMP W ORIFICE 0.8 MM	2
4	56161	RELIEF - 19215623	4
5	699170	SUPPLY REDUCER L90-LSR	2
6	55734	COMPENSATOR, MAIN-TOOL-STK- 450 VALVE	1
7	699180	1.00MM PILOT ORIFICE	2
*	57318	SPOOL, 4AB VA450 HOIST SPOOL	1
*	699200	KIT SPRING PACK 6.5-19 BAR STD VA450	1
*	20107604	KIT B-SIDE COVER, U/U VA450/VA300 CAP B W/ #8 SAE PLUG	1

H200-00185 - W450 MAIN VALVE SECTION - PROCESSOR/SAW (CONTROL FALL PROCESSOR)

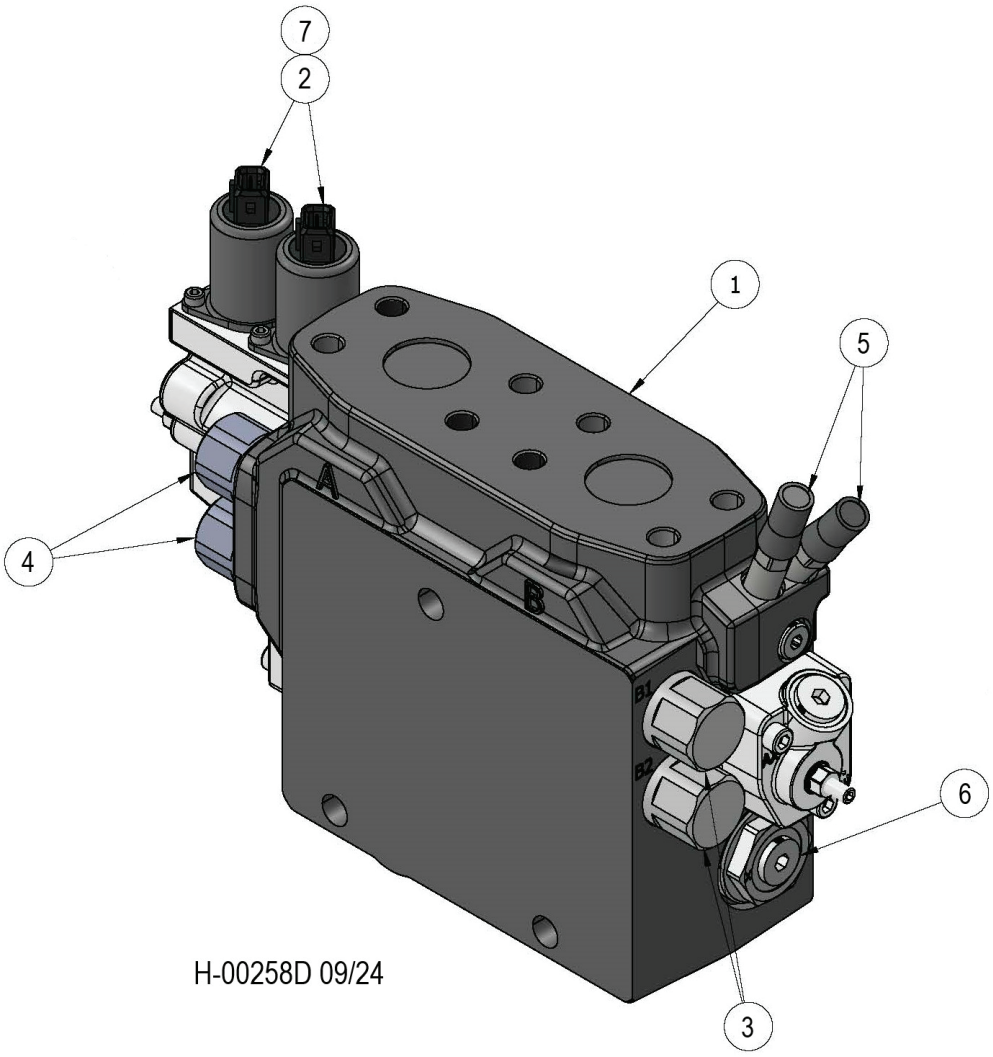

Item	Part #	Description	Qty.
1	20108702	VA450 BUILD PROGRAM WORK SECTION	1
*	20099963	SPOOL 4AE VA450 SAW SPOOL	1
*	699200	KIT SPRING PACK 6.5-19 BAR STD VA450	1
*	53385	KIT, B-SIDE - COVER 450/300	1
*	20099916	KIT EC-CAP COMPLETE U/M6 VA450/VA300 END CAP A W/ STROKE LIMITER	1
6	699190	24 VDC SOLENOID AMP W ORIFICE 0.8 MM	2
7	56051	PLC185-380-20 A014 KSERI 6760874	2
8	56472	K220-WPRV-330 330 BAR PORT RELIEF VALVE	2
9	699170	SUPPLY REDUCER L90-LSR	2
10	55734	COMPENSATOR, MAIN-TOOL-STK- 450 VALVE	1
11	699180	1.00MM PILOT ORIFICE	2

***MEANS NOT SHOWN**

H200-00186 - WS300 MAIN VALVE SECTION - HEAD ROTATE (CONTROL FALL PROCESSOR)

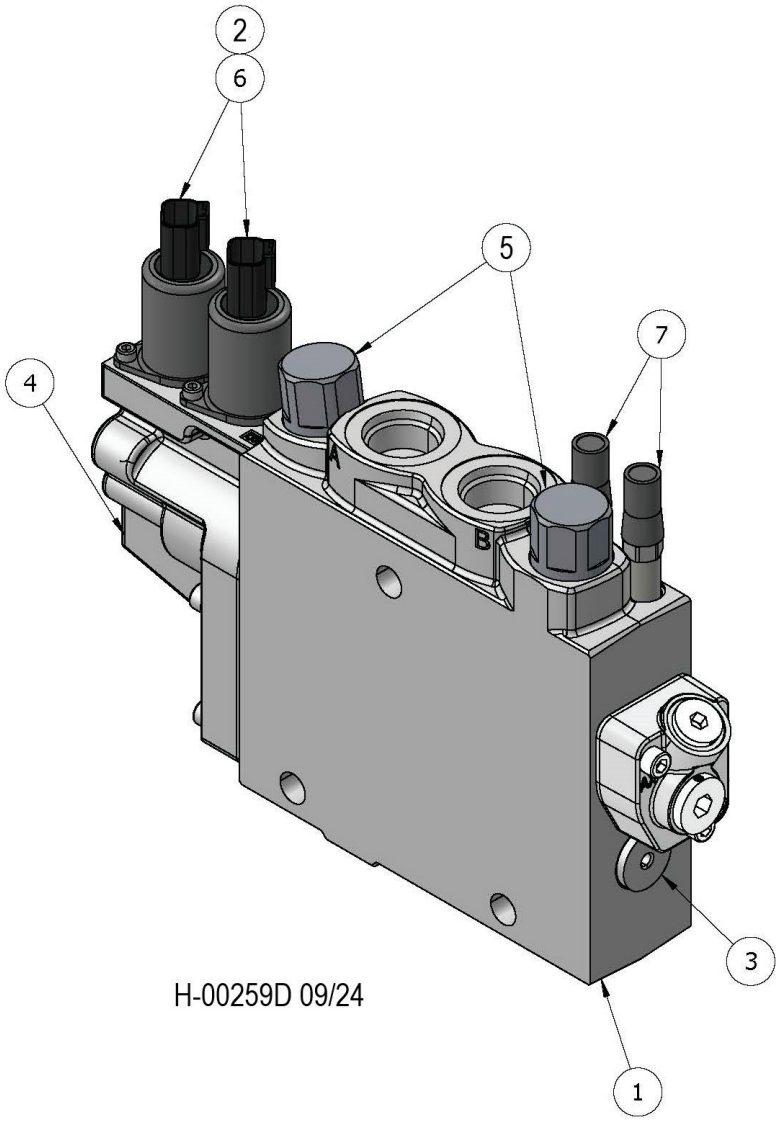

Item	Part #	Description	Qty.
1	20108704	VA300 BUILD PROGRAM WORK SECTION	1
*	53387	SPOOL, VA300, 3AR	1
3	20106632	K1 COMP KIT VA300	1
*	20099915	KIT EC-CAP COMPLETE U VA450/VA300 ENDCAP W/O STROKE LIMITER	1
*	20107604	KIT B-SIDE COVER, U/U VA450/VA300 CAP B W/ #8 SAE PLUG	1
6	696080	SOLENOID VALVE 24VDC ORIFICE 0.8MM DEUTS	2
7	699170	SUPPLY REDUCER L90-LSR	2
8	19217272	280 BAR WP RELIEF 9120029916	2
9	20099909	KIT SPRING PACK 6 5-19 BAR STD VA450/VA300 SPRING PACK	1
10	699180	1.00MM PILOT ORIFICE	2

***MEANS NOT SHOWN**

H200-00187 - WS300 MAIN VALVE SECTION - CAB LEVEL - (CONTROL FALL PROCESSOR)

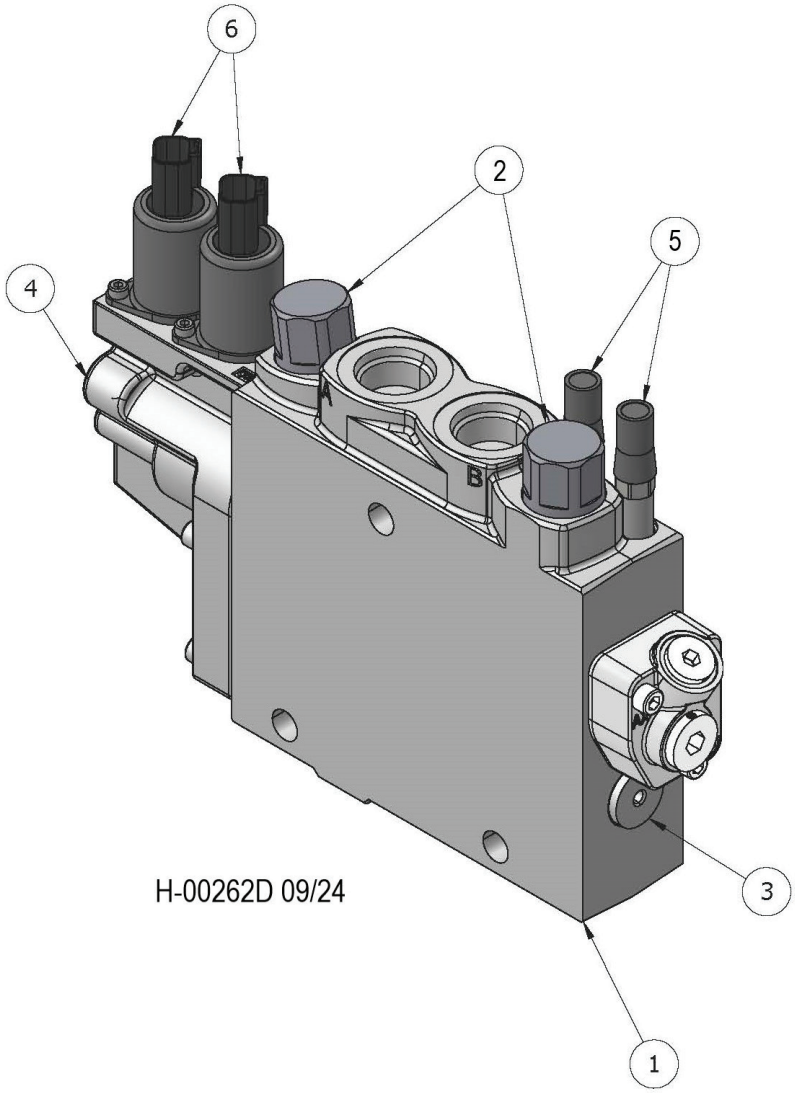

Item	Part #	Description	Qty.
1	20108705	VA300 BUILD PROGRAM WORK SECTION	1
2	19217272	280 BAR WP RELIEF 9120029916	2
3	20106632	K1 COMP KIT VA300	1
4	20099915	KIT EC-CAP COMPLETE U VA450/VA300 ENDCAP W/O STROKE LIMITER	1
5	699170	SUPPLY REDUCER L90-LSR	2
6	696080	1.00MM PILOT ORIFICE	2
*	20099965	VA300 LEVEL 3AW SPOOL	1
*	20099909	KIT SPRING PACK 6 5-19 BAR STD VA450/VA300 SPRING PACK	1
*	699180	1.00MM PILOT ORIFICE	2

***MEANS NOT SHOWN**

H200-00188 - WS300 MAIN VALVE SECTION - OUTLET - (CONTROL FALL PROCESSOR)

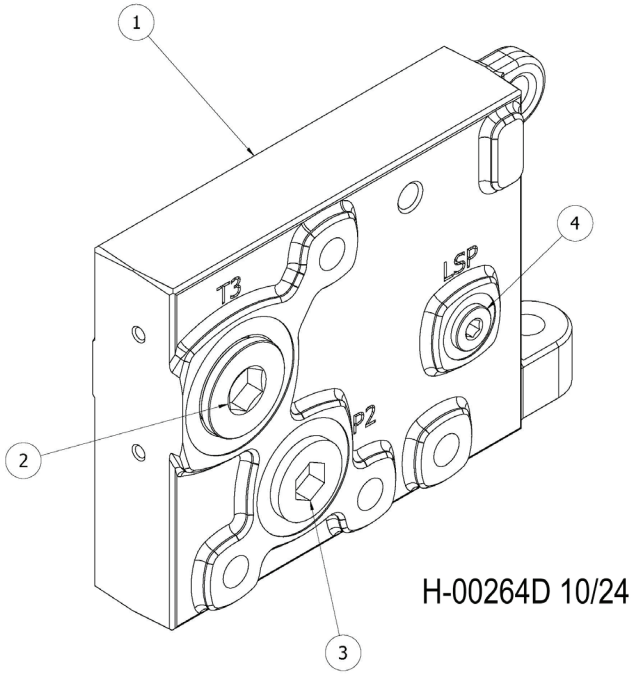

Item	Part #	Description	Qty.
1	20110351	VA300/450 BUILD PROGRAM END SECTION	1
2	19208810	HOLLOW HEX PLUG SAE-ORB	1
3	19207916	HOLLOW HEX PLUG	1
4	19215123	PLUG #6 SAE HOLLOW HEX	1

H200-00190 - BOOM PLATE HYD. FITTINGS - DISC SAW & PROCESSOR ATTACHMENTS (W450/W300 VALVE)

NOTE: HYDRAULIC FITTINGS GET 545 LOCTITE™

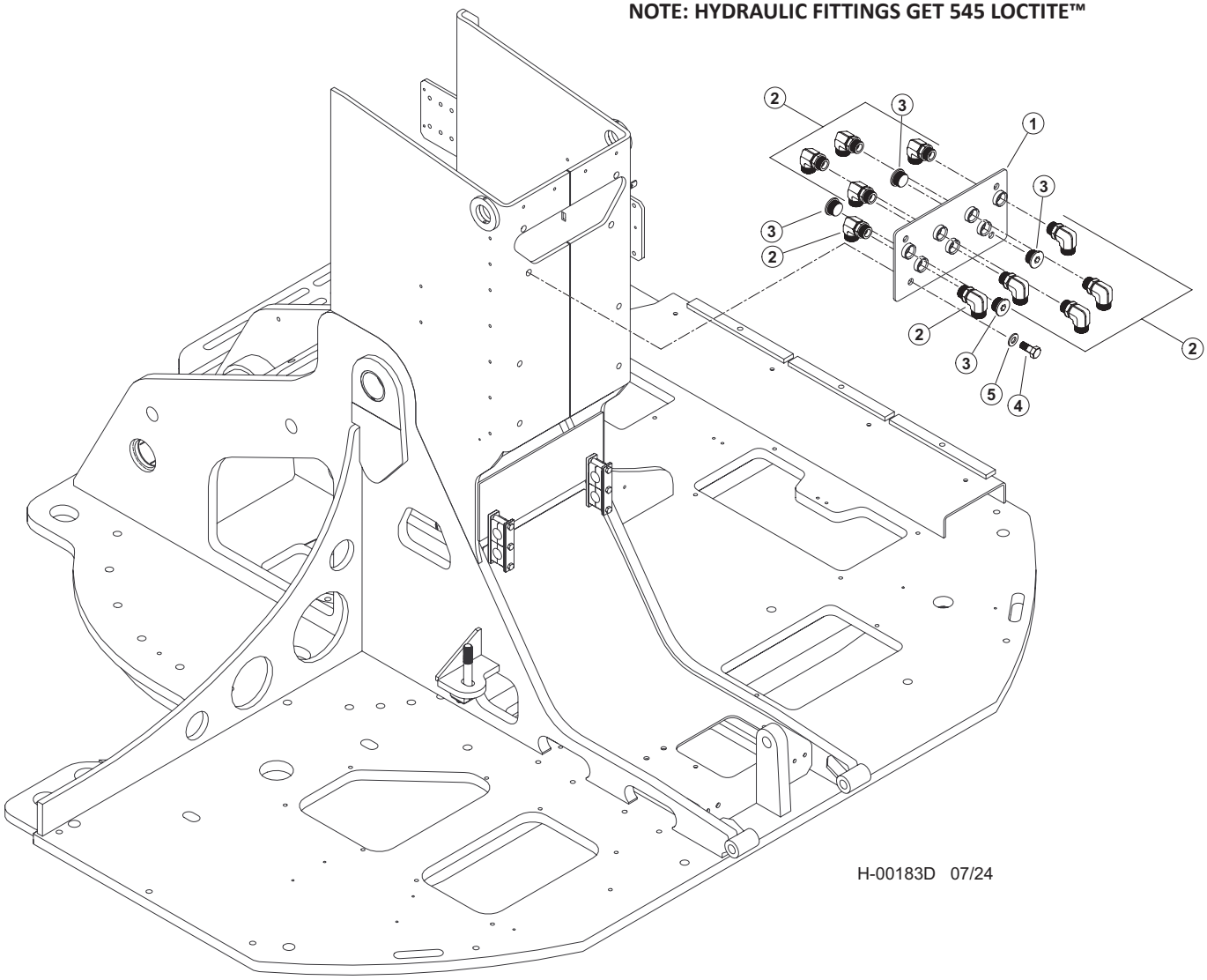

Item	Part #	Description	Qty.
	65882	KIT, HYD FITTING, BH, DISCSAW BASIC	1
1	60278	WELDMENT, BUNCHER BOOM BH PLATE	1
2	15528	ELBOW, 90 - FF1868T-1616S	10
3	19847	PLUG - 6408-HHP-16	4
4	10739	BOLT - .5” X 1.5”	4
5	10804	WASHER, FLAT - .5”	4

H200-00200 - MAIN VALVE HYD. FITTINGS - DANGLE PROCESSOR WITH FIXED ARM (LEVELING) (W450/W300 VALVE)

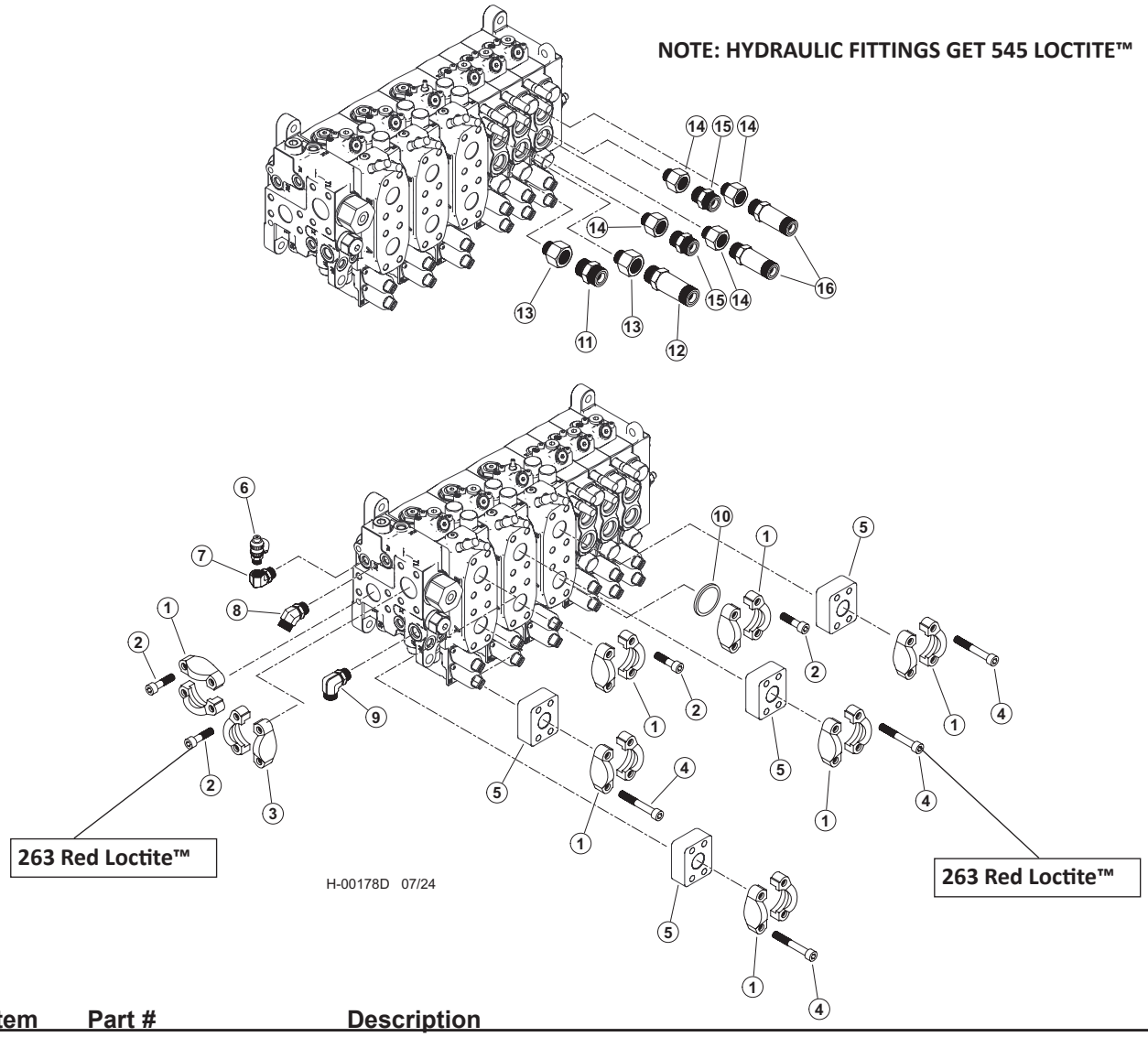

Item	Part #	Description	Qty.
	533280	VALVE, VA450 - FIXED ARM DANGLE PROCESSOR (LEVELING)	1
	65899	KIT, HYD FITTING KIT, 450, PRCSR, FXD	1
	65613	KIT, FITTING DISC LEVEL 450V D-SERIES	1
1	65457	20SFXO & M12 SPLIT FLANGE (CODE 62)	7
2	18988	BOLT, ALLEN HEAD - 12MM-1.75P X 45MM **263 RED LOCTITE™**	24
3	15186	KIT, SPLIT FLANGE - 1.5” (CODE 61)	1
4	59135	BOLT, SHC, 12.9 - M12-1.75P X 80mm **263 RED LOCTITE™**	16
5	65458	ANCHOR-ASX-20GP STANDOFF	4
6	57820	TAP, GAUGE PORT # 6 SAE - Oring Boss	1
7	58348	FITTING, ELBOW 6-AOEG5-5	1
8	23015	ELBOW, 45 - 6 V5OLO-S	1
9	16360	ELBOW, 90 - FF1868T-0808S	1
10	58423	PLUG - SPLIT FLANGE CODE 62 20PQ2	1
11	50039	CONNECTOR, STR - 848-TTO-10X10	1
12	52554	CONNECTOR, STR LONG - 10X10	1
13	16358	BUSHING, REDUCER - 6410-12-10	2
14	20067	BUSHING, REDUCER - 6410-12-8	4
15	15117	CONNECTOR, STR - FF1852T-0808S	2
16	19091	CONNECTOR, STR LONG - 848L-TTO-08X08	2

H200-00210 - MAIN VALVE HYD. FITTINGS - DANGLE PROCESSOR WITH FIXED ARM (NON-LEVELING) (W450/W300 VALVE)

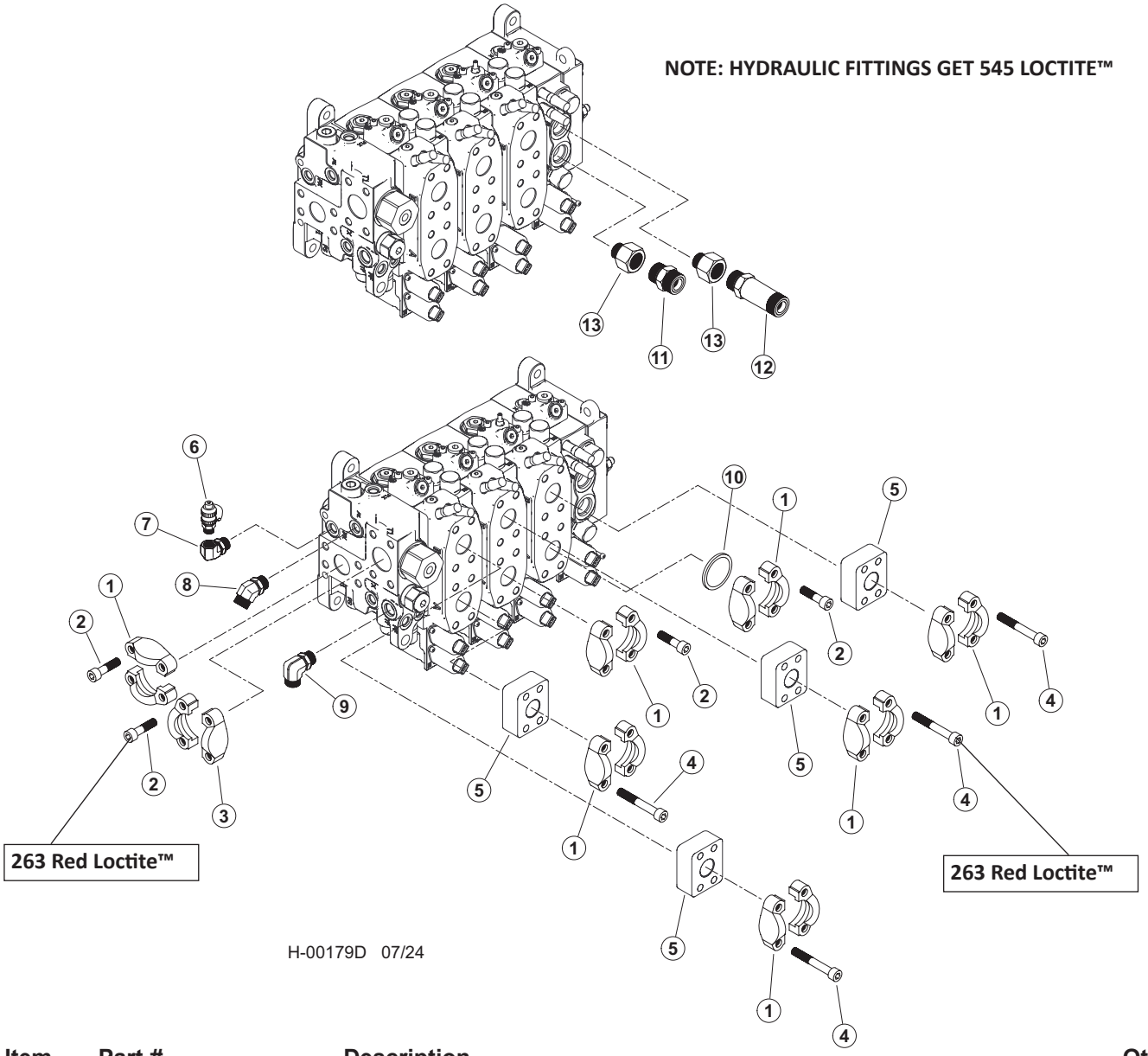

Item	Part #	Description	Qty.
	659740	VALVE, VA450 - FIXED ARM DANGLE PROCESSOR (LEVELING)	1
	65899	KIT, HYD FITTING KIT, 450, PRCSR, FXD	1
1	65457	20SFXO & M12 SPLIT FLANGE (CODE 62)	7
2	18988	BOLT, ALLEN HEAD - 12MM-1.75P X 45MM **263 RED LOCTITE™**	24
3	15186	KIT, SPLIT FLANGE - 1.5" (CODE 61)	1
4	59135	BOLT, SHC, 12.9 - M12-1.75P X 80mm **263 RED LOCTITE™**	16
5	65458	ANCHOR-ASX-20GP STANDOFF	4
6	57820	TAP, GAUGE PORT # 6 SAE - Oring Boss	1
7	58348	FITTING, ELBOW 6-AOEG5-5	1
8	23015	ELBOW, 45 - 6 V5OLO-S	1
9	16360	ELBOW, 90 - FF1868T-0808S	1
10	58423	PLUG - SPLIT FLANGE CODE 62 20PQ2	1
11	50039	CONNECTOR, STR - 848-TTO-10X10	1
12	52554	CONNECTOR, STR LONG - 10X10	1
13	16358	BUSHING, REDUCER - 6410-12-10	2

H200-00211 - W450 MAIN VALVE SECTION - INLET - (FIXED ARM DANGLE PROCESSOR)

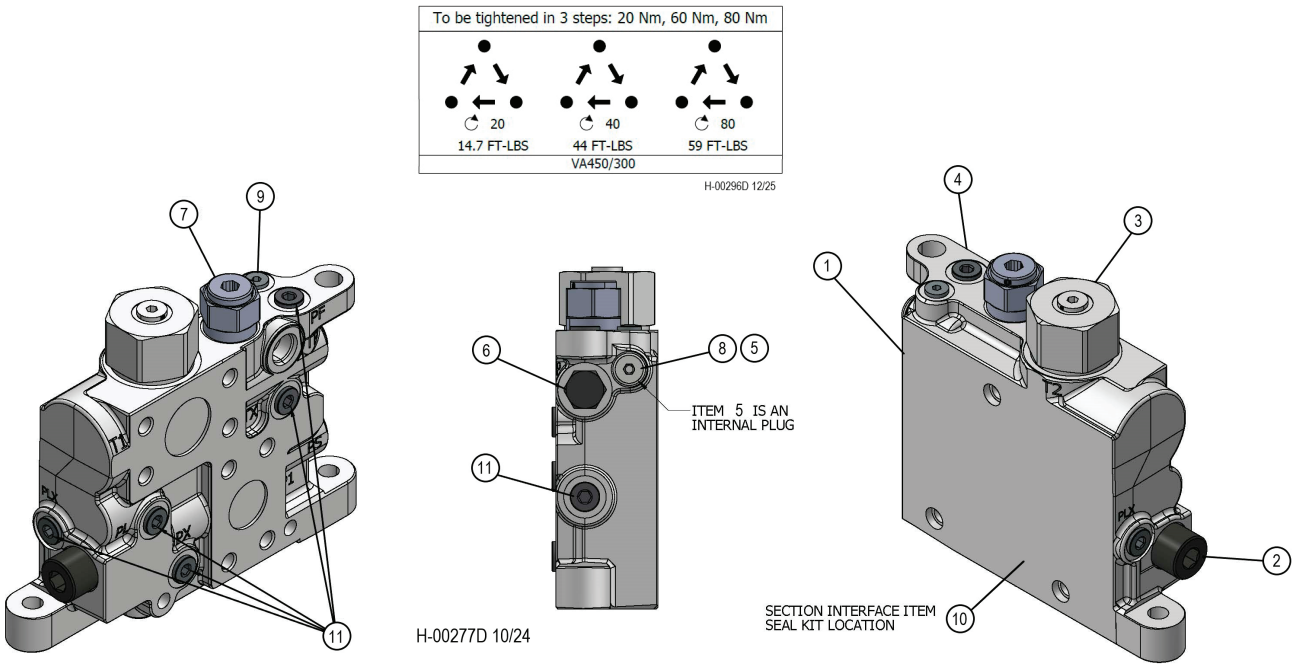

Item	Part #	Description	Qty.
1	20106626	VA450 INLET	1
2	19217256	PLC182-330-20 RELIEF MAIN R/V 330 BAR 4785 PSI	1
3	20106606	MF5 COUNTER PRESSURE VALVE 6764842	1
4	20110560	VA450 BLANK INLET SECTION LSB450	1
5	20110554	TP INTERNAL PLUG	1
6	19220867	CHECK CART C08-2 STD 3PSI	1
7	20090649	VA300/450 REDUCING VALVE R35	1
8	20110562	PLUG 14MM X 1.5 METRIC	1
9	19213753	HOLLOW HEX PLUG SAE-ORB	1
10	20089696	SEAL KIT VA300 & VA450 INTERSECT	1
11	19215123	PLUG #6 SAE HOLLOW HEX	6

H200-00212 - W450 MAIN VALVE SECTION - STICK BOOM (FIXED ARM DANGLE PROCESSOR)

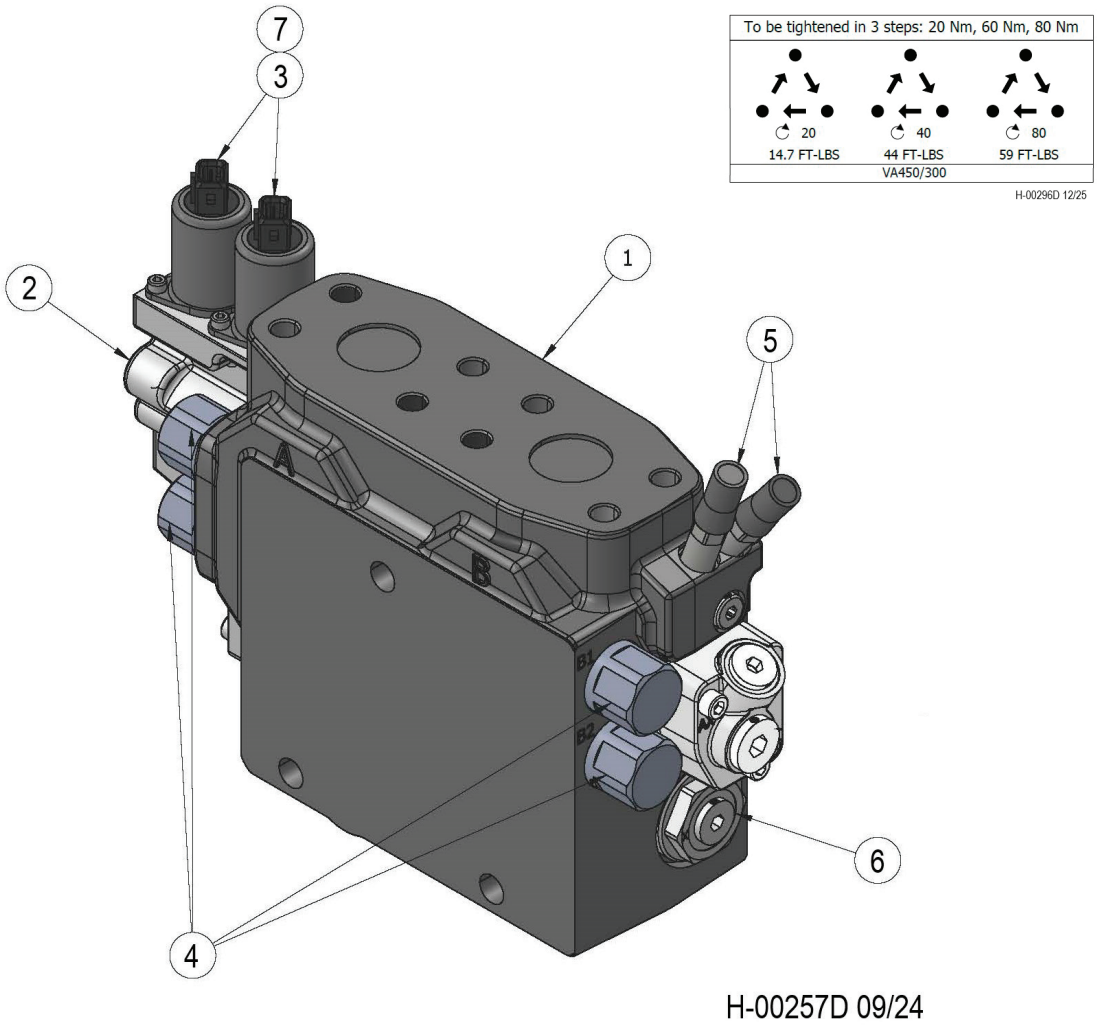

Item	Part #	Description	Qty.
1	20108694	VA450 BUILD PROGRAM WORK SECTION	1
2	20099915	KIT EC-CAP COMPLETE U VA450/VA300 ENDCAP W/O STROKE LIMITER	1
3	699190	24 VDC SOLENOID AMP W ORIFICE 0.8 MM	2
4	56161	RELIEF - 19215623	4
5	699170	SUPPLY REDUCER L90-LSR	2
6	55734	COMPENSATOR, MAIN-TOOL-STK- 450 VALVE	1
7	699180	1.00MM PILOT ORIFICE	2
*	20099958	SPOOL 4AB VA450 HOIST SPOOL	1
*	699200	1.00MM PILOT ORIFICE	1
*	20107604	KIT B-SIDE COVER, U/U VA450/VA300 CAP B W/ #8 SAE PLUG	1

***MEANS NOT SHOWN**

H200-00214 - W450 MAIN VALVE SECTION - PROCESSOR / SAW (FIXED ARM DANGLE PROCESSOR)

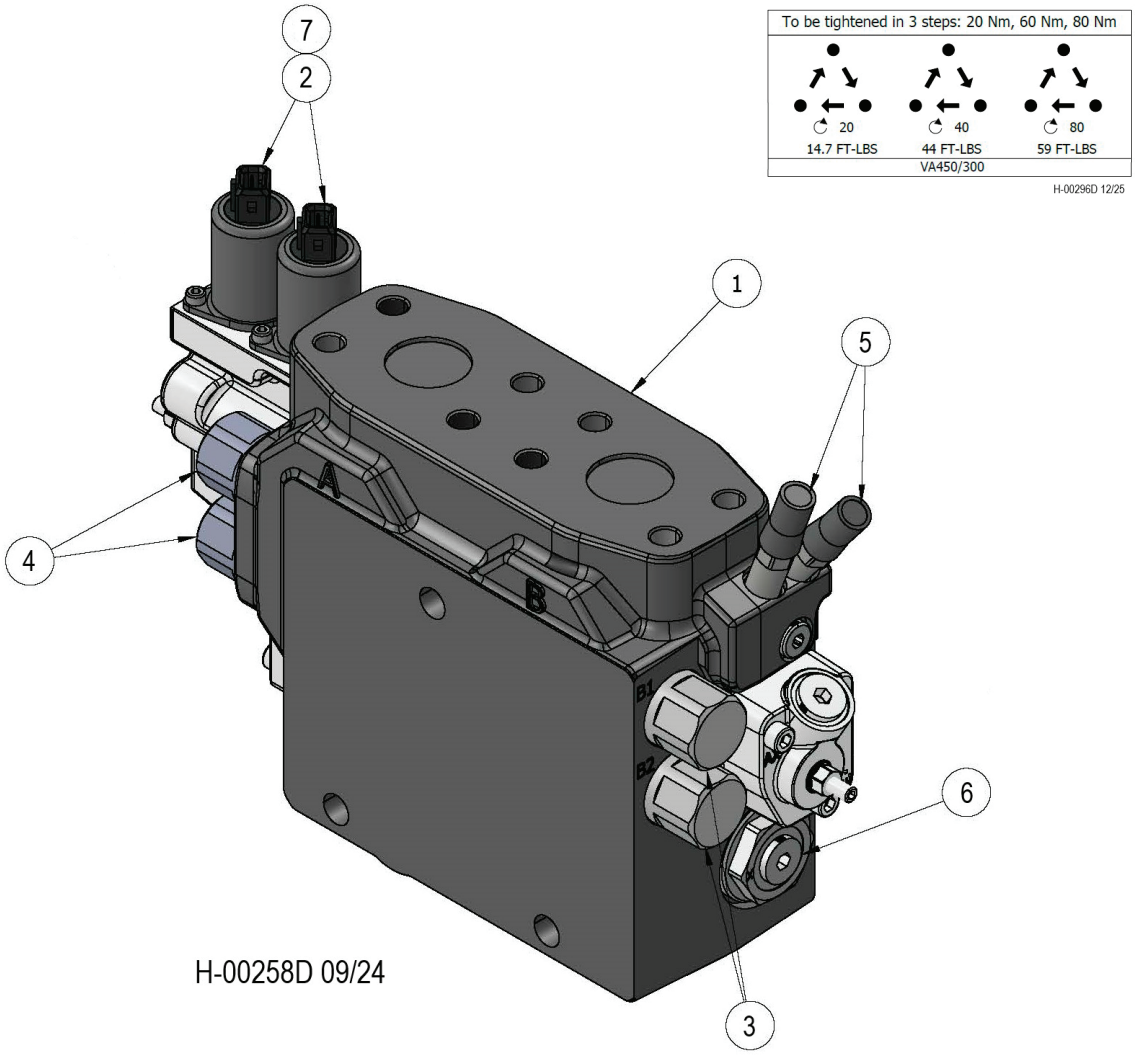

Item	Part #	Description	Qty.
1	20108702	VA450 BUILD PROGRAM WORK SECTION	1
*	20099963	SPOOL 4AE VA450 SAW SPOOL	1
*	699200	KIT SPRING PACK 6.5-19 BAR STD VA450	1
*	53385	KIT, B-SIDE - COVER 450/300	1
*	20099916	KIT EC-CAP COMPLETE U/M6 VA450/VA300 END CAP A W/ STROKE LIMITER	1
6	699190	24 VDC SOLENOID AMP W ORIFICE 0.8 MM	2
7	56051	CARTRIDGE, PORT RELIEF K220-WPRV-380	2
8	56472	K220-WPRV-330 330 BAR PORT RELIEF VALVE	2
9	699170	SUPPLY REDUCER L90-LSR	2
10	55734	COMPENSATOR, MAIN-TOOL-STK- 450 VALVE	1
11	699180	1.00MM PILOT ORIFICE	2

***MEANS NOT SHOWN**

H200-00213 - W450 MAIN VALVE SECTION - MAIN BOOM (FIXED ARM DANGLE PROCESSOR)

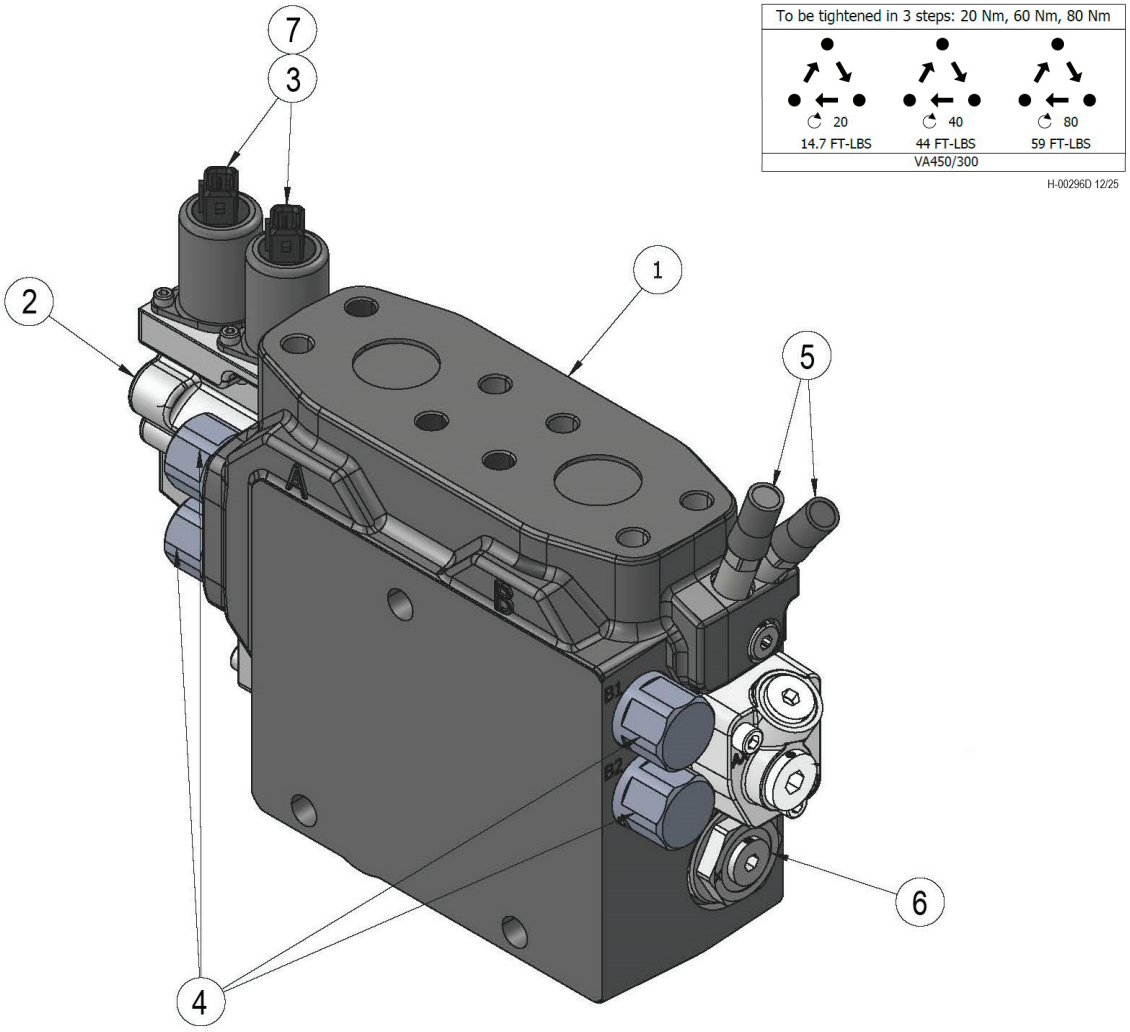

Item	Part #	Description	Qty.
1	20108696	VA450 BUILD PROGRAM WORK SECTION	1
2	20099915	KIT EC-CAP COMPLETE U VA450/VA300 ENDCAP W/O STROKE LIMITER	1
3	699190	24 VDC SOLENOID AMP W ORIFICE 0.8 MM	2
4	56161	RELIEF - 19215623	4
5	699170	SUPPLY REDUCER L90-LSR	2
6	55734	COMPENSATOR, MAIN-TOOL-STK- 450 VALVE	1
7	699180	1.00MM PILOT ORIFICE	2
*	57318	SPOOL, 4AB VA450 HOIST SPOOL	1
*	699200	KIT SPRING PACK 6.5-19 BAR STD VA450	1
*	20107604	KIT B-SIDE COVER, U/U VA450/VA300 CAP B W/ #8 SAE PLUG	1

***MEANS NOT SHOWN**

H200-00215 - WS300 MAIN VALVE SECTION - ROTATE - (FIXED ARM DANGLE PROCESSOR)

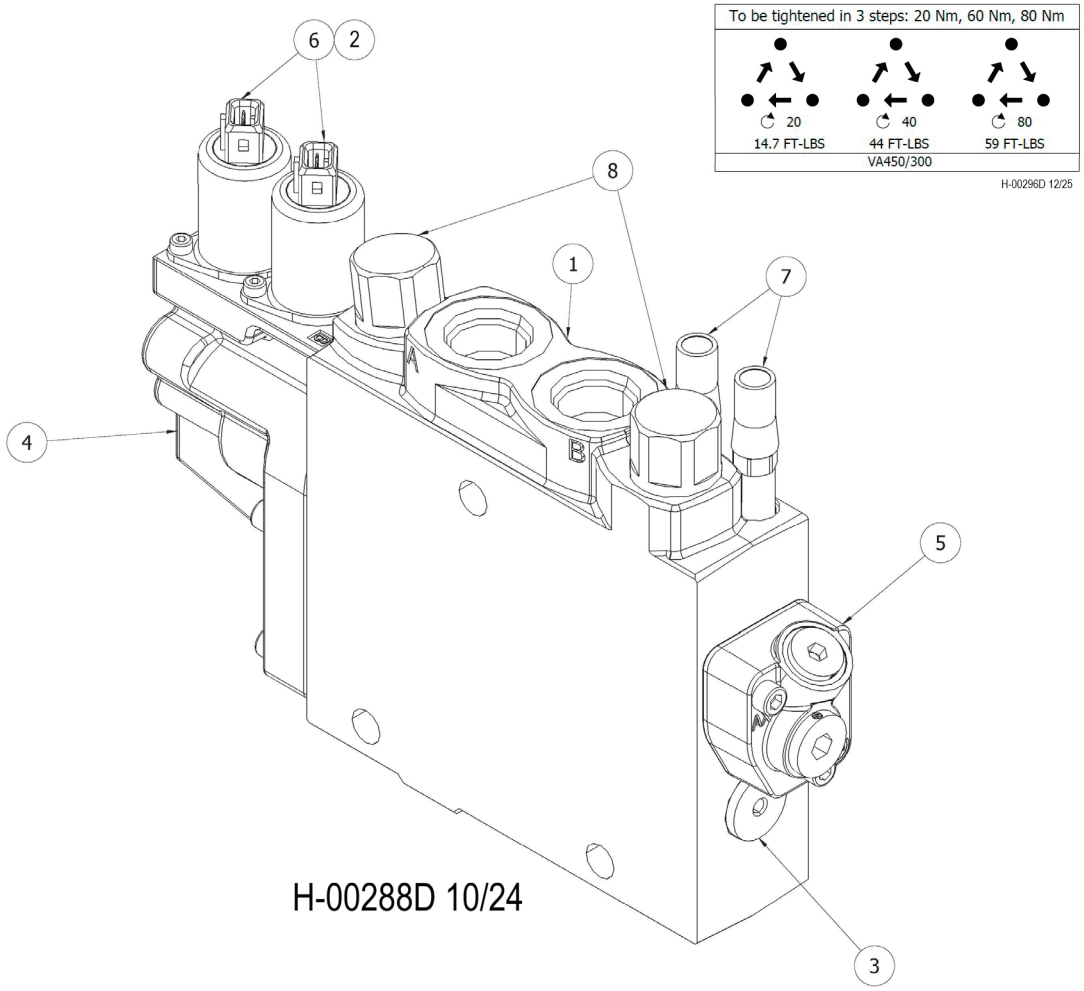

Item	Part #	Description	Qty.
1	20108704	VA300 BUILD PROGRAM WORK SECTION	1
*	53387	SPOOL, VA300, 3AR	1
3	20106632	K1 COMP KIT VA300	1
*	20099915	KIT EC-CAP COMPLETE U VA450/VA300 ENDCAP W/O STROKE LIMITER	1
*	20107604	KIT B-SIDE COVER, U/U VA450/VA300 CAP B W/ #8 SAE PLUG	1
6	696080	SOLENOID VALVE 24VDC ORIFICE 0.8MM DEUTS	2
7	699170	SUPPLY REDUCER L90-LSR	2
8	19217272	280 BAR WP RELIEF 9120029916	2
9	20099909	KIT SPRING PACK 6 5-19 BAR STD VA450/VA300 SPRING PACK	1
10	699180	1.00MM PILOT ORIFICE	2

***MEANS NOT SHOWN**

H200-00216 - WS300 MAIN VALVE SECTION - CAB LEVEL (FIXED ARM DANGLE PROCESSOR)

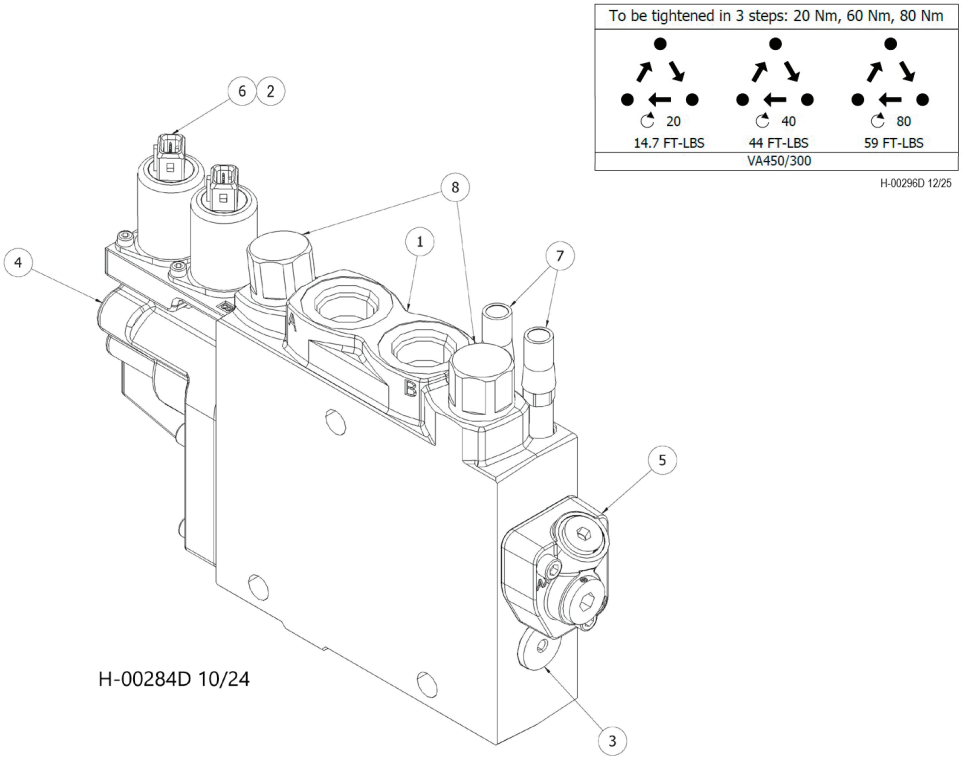

Item	Part #	Description	Qty.
1	20108705	VA300 BUILD PROGRAM WORK SECTION	1
2	19217272	280 BAR WP RELIEF 9120029916	2
3	20106632	K1 COMP KIT VA300	1
4	20099915	KIT EC-CAP COMPLETE U VA450/VA300 ENDCAP W/O STROKE LIMITER	1
5	699170	SUPPLY REDUCER L90-LSR	2
6	696080	SOLENOID VALVE 24VDC ORIFICE 0.8MM DEUTS	2
*	20099965	VA300 LEVEL 3AW SPOOL	1
*	20099909	KIT SPRING PACK 6 5-19 BAR STD VA450/VA300 SPRING PACK	1
*	699180	1.00MM PILOT ORIFICE	2

***MEANS NOT SHOWN**

H200-00217 - WS300 MAIN VALVE SECTION - OUTLET
(FIXED ARM DANGLE PROCESSOR)

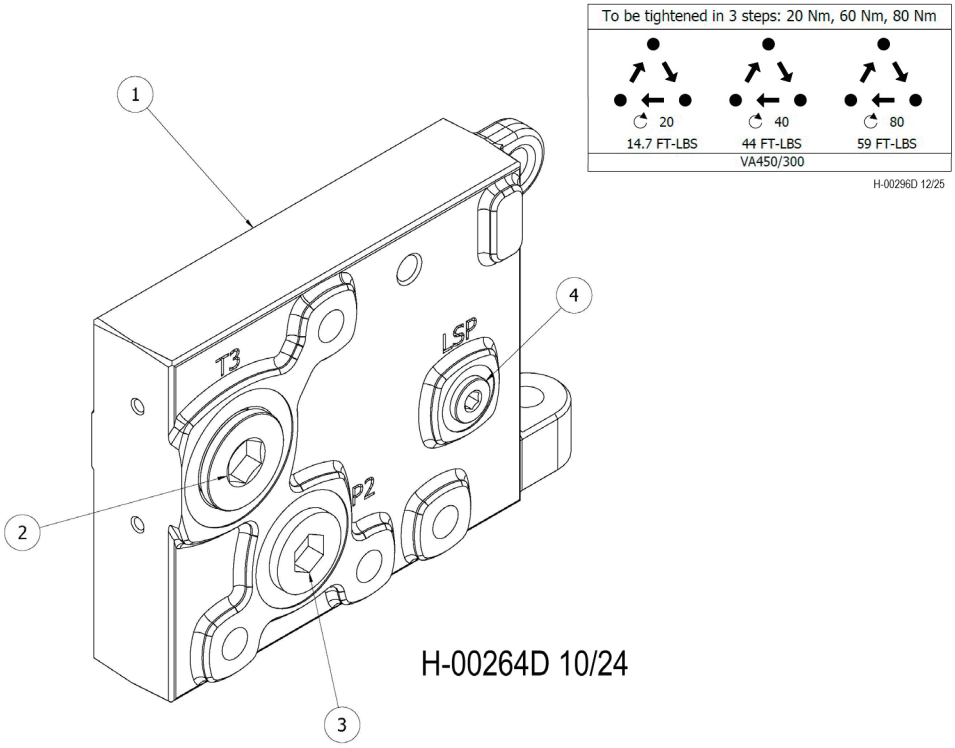

Item	Part #	Description	Qty.
1	20110351	VA300/450 BUILD PROGRAM END SECTION	1
2	19208810	HOLLOW HEX PLUG SAE-ORB	1
3	19207916	HOLLOW HEX PLUG	1
4	19215123	PLUG #6 SAE HOLLOW HEX	1

H200-00220 - MAIN VALVE HYD. FITTINGS - DANGLE PROCESSOR WITH SQUIRT BOOM (LEVELING) (W450/W300 VALVE)

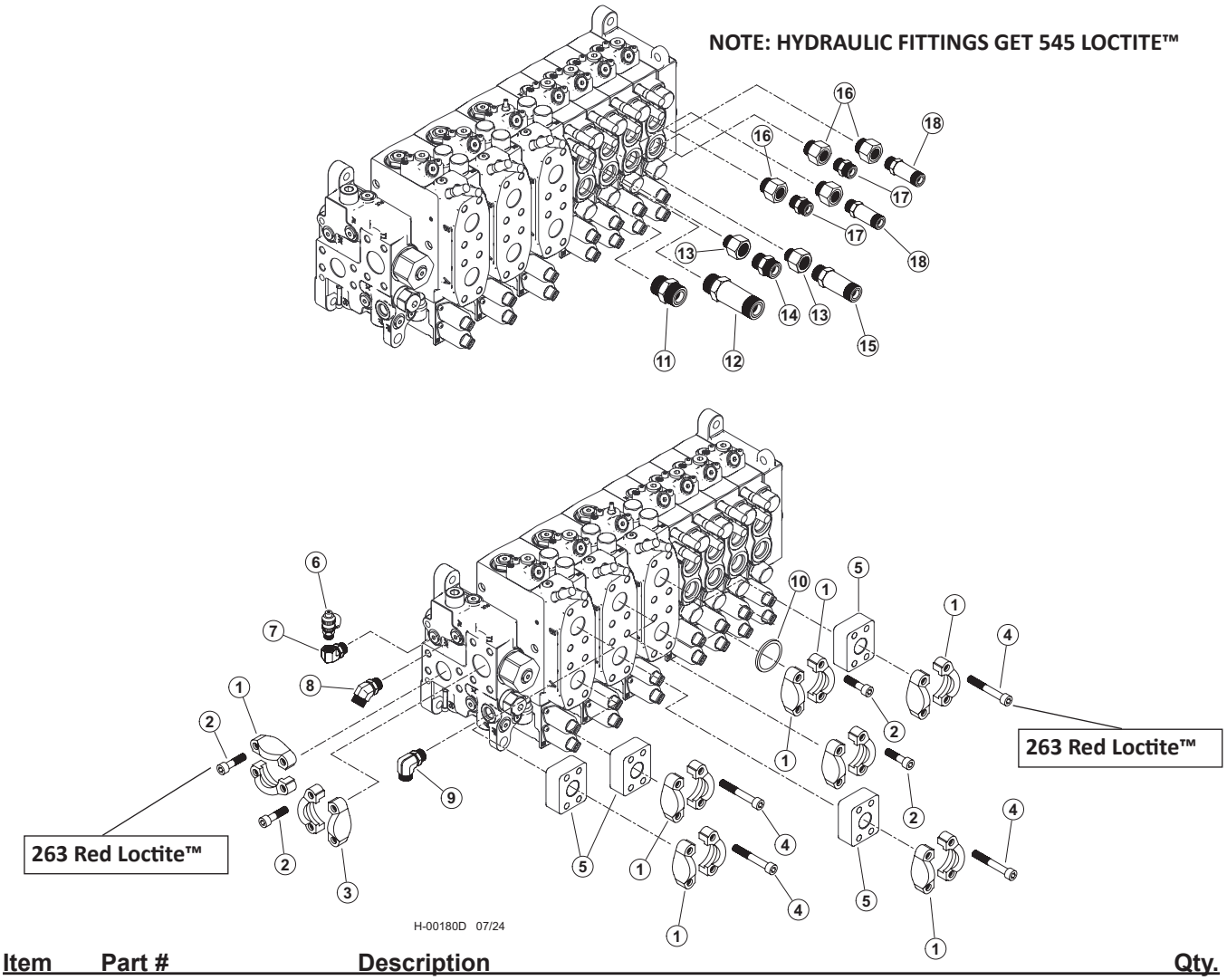

Item	Part #	Description	Qty.
	53336	VALVE, VA450 - SQUIRT ARM DANGLE PROCESSOR (LEVELING)	1
	664830	KIT, HYD FITTING KIT, 450, PRCSR, SQUIRT	1
	65613	KIT, FITTING DISC LEVEL 450V D-SERIES	1
1	65457	20SFXO & M12 SPLIT FLANGE (CODE 62)	7
2	18988	BOLT, ALLEN HEAD - 12MM-1.75P X 45MM **263 RED LOCTITE™**	16
3	15186	KIT, SPLIT FLANGE - 1.5" (CODE 61)	1
4	59135	BOLT, SHC, 12.9 - M12-1.75P X 80mm **263 RED LOCTITE™**	16
5	65458	ANCHOR-ASX-20GP STANDOFF	4
6	57820	TAP, GAUGE PORT # 6 SAE - Oring Boss	1
7	58348	FITTING, ELBOW 6-AOEG5-5	1
8	23015	ELBOW, 45 - 6 V5OLO-S	1
9	16360	ELBOW, 90 - FF1868T-0808S	1
10	58423	PLUG - SPLIT FLANGE CODE 62 20PQ2	1
11	15152	CONNECTOR, STR - FF1852T-1212S	1
12	19092	CONNECTOR, STR LONG - 848L-TTO-12X12	1
13	16358	BUSHING, REDUCER - 6410-12-10	2
14	50039	CONNECTOR, STR - 848-TTO-10X10	1
15	52554	CONNECTOR, STR LONG - 10X10	1
16	20067	BUSHING, REDUCER - 6410-12-8	4
17	15117	CONNECTOR, STR - FF1852T-0808S	2
18	19091	CONNECTOR, STR LONG - 848L-TTO-08X08	2

H200-00230 - MAIN VALVE HYD. FITTINGS - DANGLE PROCESSOR WITH SQUIRT BOOM (NON-LEVELING) (W450/W300 VALVE)

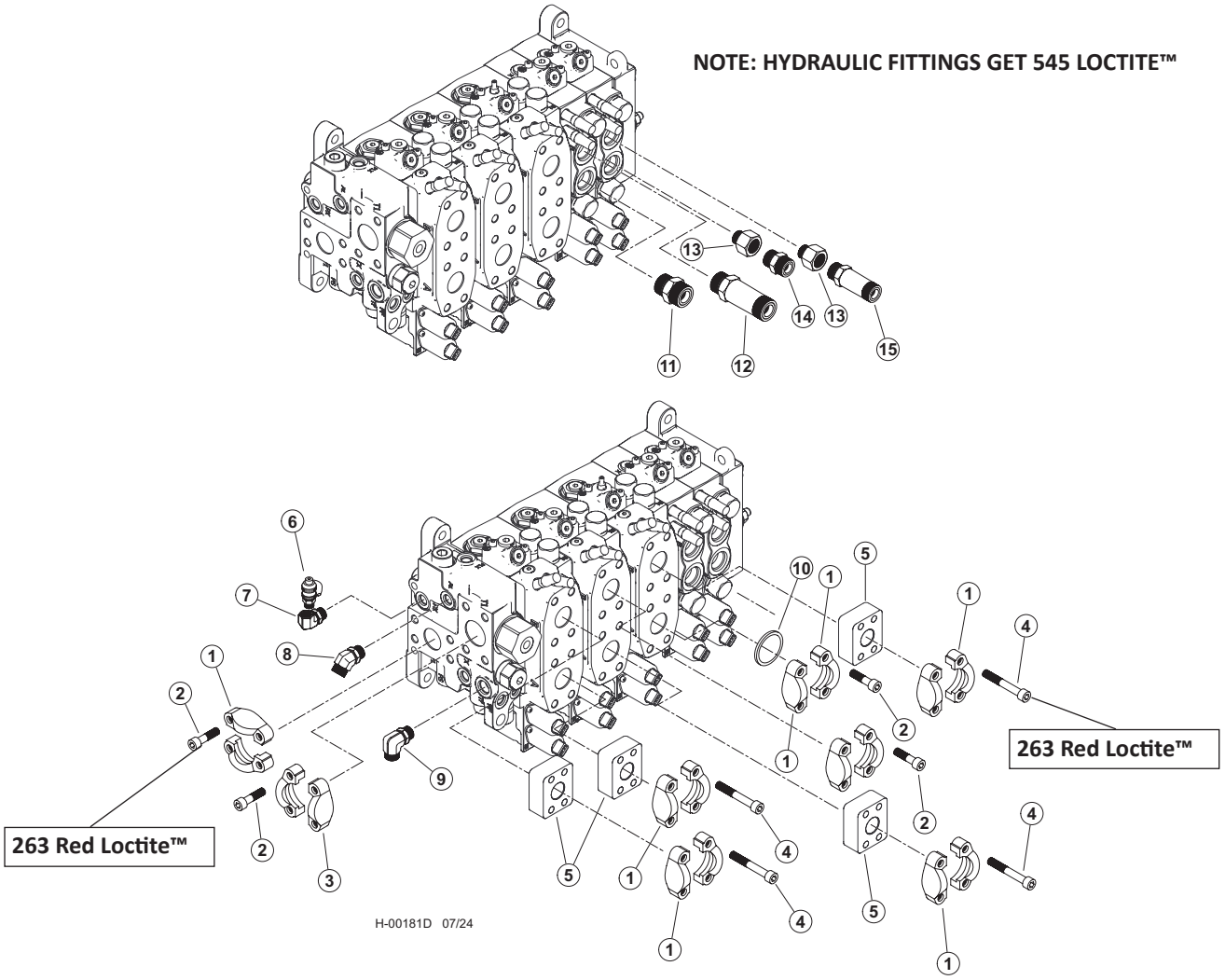

Item	Part #	Description	Qty.
	65973	VALVE, VA450 - SQUIRT ARM DANGLE PROCESSOR (NON-LEVELING)	1
	664830	KIT, HYD FITTING KIT, 450, PRCSR, SQUIRT	1
	65613	KIT, FITTING DISC LEVEL 450V D-SERIES	1
1	65457	20SFXO & M12 SPLIT FLANGE (CODE 62)	7
2	18988	BOLT, ALLEN HEAD - 12MM-1.75P X 45MM **263 RED LOCTITE™**	16
3	15186	KIT, SPLIT FLANGE - 1.5” (CODE 61)	1
4	59135	BOLT, SHC, 12.9 - M12-1.75P X 80mm **263 RED LOCTITE™**	16
5	65458	ANCHOR-ASX-20GP STANDOFF	4
6	57820	TAP, GAUGE PORT # 6 SAE - Oring Boss	1
7	58348	FITTING, ELBOW 6-AOEG5-5	1
8	23015	ELBOW, 45 - 6 V5OLO-S	1
9	16360	ELBOW, 90 - FF1868T-0808S	1
10	58423	PLUG - SPLIT FLANGE CODE 62 20PQ2	1
11	15152	CONNECTOR, STR - FF1852T-1212S	1
12	19092	CONNECTOR, STR LONG - 848L-TTO-12X12	1
13	16358	BUSHING, REDUCER - 6410-12-10	2
14	50039	CONNECTOR, STR - 848-TTO-10X10	1
15	52554	CONNECTOR, STR LONG - 10X10	1

H200-00231 - WS450 MAIN VALVE SECTION - INLET
(SQUIRT ARM DANGLE PROCESSOR)

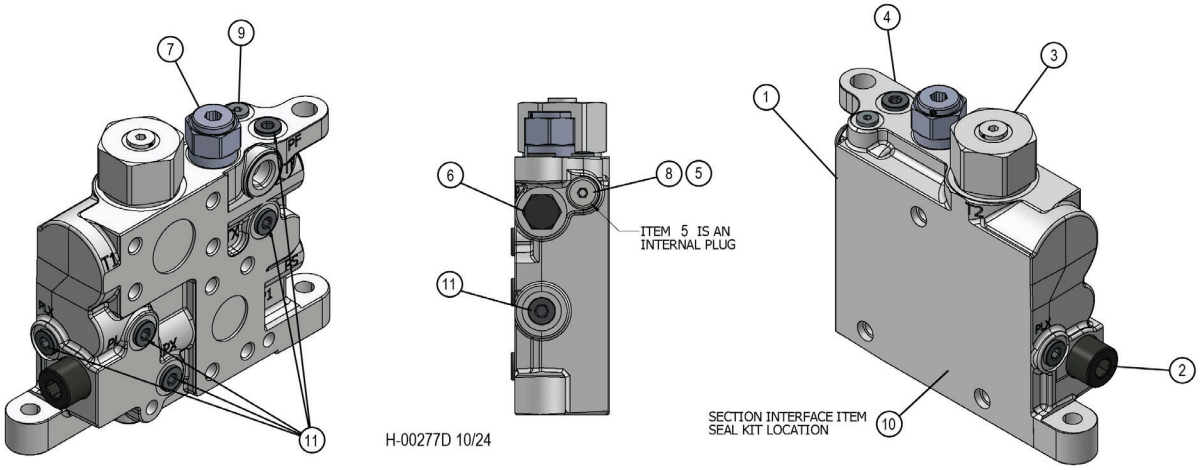

Item	Part #	Description	Qty.
1	20106626	VA450 INLET	1
2	19217256	PLC182-330-20 RELIEF MAIN R/V 330 BAR 4785 PSI	1
3	20106606	MF5 COUNTER PRESSURE VALVE 6764842	1
4	20110560	VA450 BLANK INLET SECTION LSB450	1
5	20110554	TP INTERNAL PLUG	1
6	19220867	CHECK CART C08-2 STD 3PSI	1
7	20090649	VA300/450 REDUCING VALVE R35	1
8	20110562	PLUG 14MM X 1.5 METRIC	1
9	19213753	HOLLOW HEX PLUG SAE-ORB	1
10	20089696	SEAL KIT VA300 & VA450 INTERSECT	1
11	19215123	PLUG #6 SAE HOLLOW HEX	6

H200-00232 - WS450 MAIN VALVE SECTION - STICK BOOM (SQUIRT ARM DANGLE PROCESSOR)

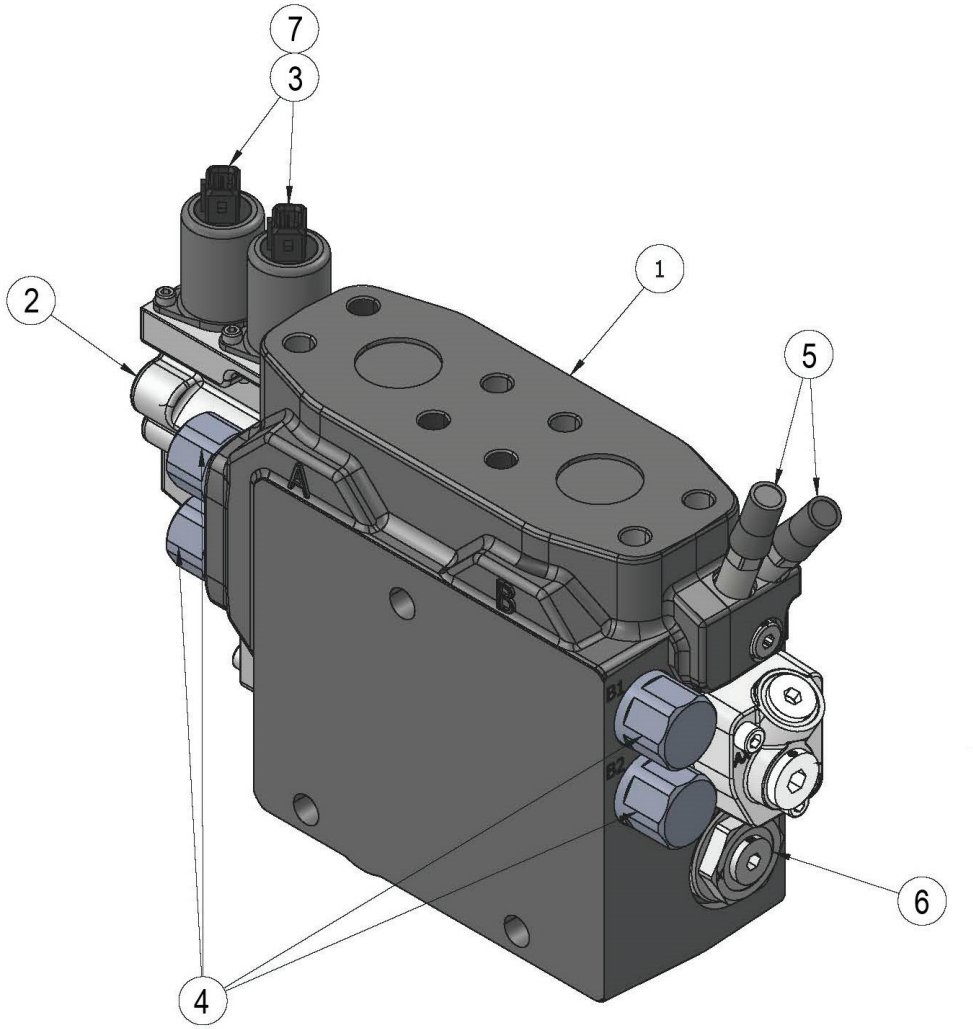

H-00257D 09/24

Item	Part #	Description	Qty.
1	20108694	VA450 BUILD PROGRAM WORK SECTION	1
2	20099915	KIT EC-CAP COMPLETE U VA450/VA300 ENDCAP W/O STROKE LIMITER	1
3	699190	24 VDC SOLENOID AMP W ORIFICE 0.8 MM	2
4	56161	RELIEF - 19215623	4
5	699170	SUPPLY REDUCER L90-LSR	2
6	56051	COMPENSATOR, MAIN-TOOL-STK- 450 VALVE	1
7	699180	1.00MM PILOT ORIFICE	2
*	20099958	VA450 STICK 4AA SPOOL	1
*	699200	KIT SPRING PACK 6.5-19 BAR STD VA450	1
*	20107604	KIT B-SIDE COVER, U/U VA450/VA300 CAP B W/ #8 SAE PLUG	1

*** MEANS NOT SHOWN)**

H200-00233 - WS450 MAIN VALVE SECTION - MAIN BOOM (SQUIRT ARM DANGLE PROCESSOR)

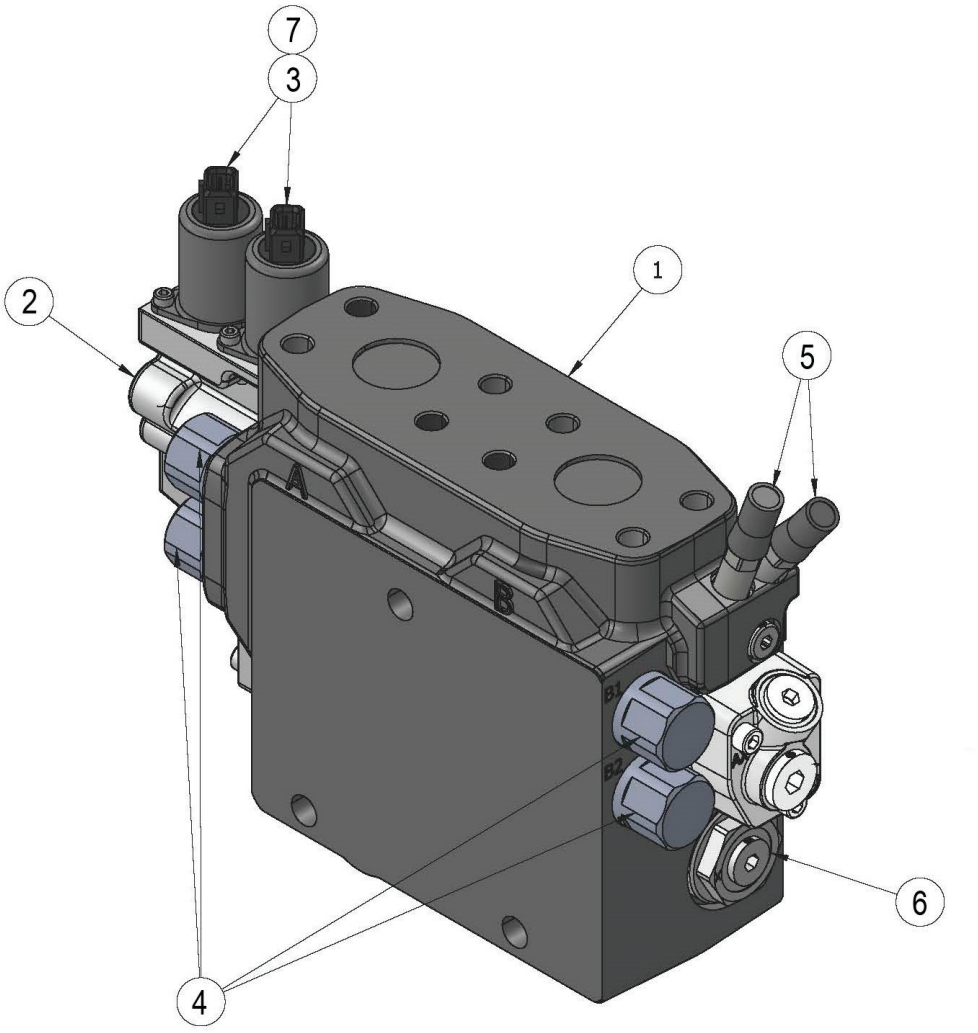

H-00257D 09/24

Item	Part #	Description	Qty.
1	20108696	VA450 BUILD PROGRAM WORK SECTION	1
2	20099915	KIT EC-CAP COMPLETE U VA450/VA300 ENDCAP W/O STROKE LIMITER	1
3	699190	24 VDC SOLENOID AMP W ORIFICE 0.8 MM	2
4	56161	RELIEF - 19215623	4
5	699170	SUPPLY REDUCER L90-LSR	2
6	56051	CARTRIDGE, PORT RELIEF K220-WPRV-380	1
7	699180	1.00MM PILOT ORIFICE	2
*	57318	SPOOL, 4AB VA450 HOIST SPOOLL	1
*	699200	KIT SPRING PACK 6.5-19 BAR STD VA450	1
*	20107604	KIT B-SIDE COVER, U/U VA450/VA300 CAP B W/ #8 SAE PLUG	1

*** MEANS NOT SHOWN)**

H200-00234 - WS450 MAIN VALVE SECTION - PROCESSOR / SAW (SQUIRT ARM DANGLE PROCESSOR)

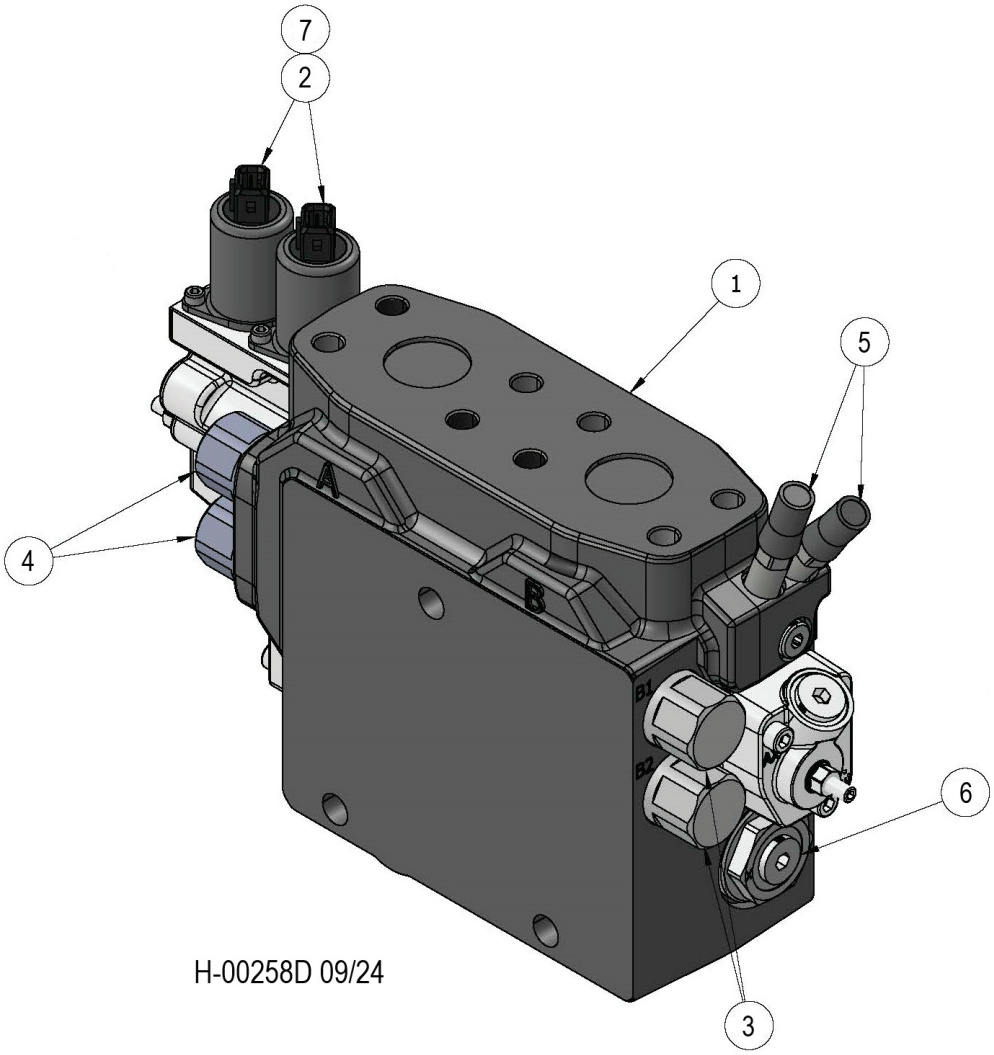

Item	Part #	Description	Qty.
1	20108702	VA450 BUILD PROGRAM WORK SECTION	1
*	20099963	SPOOL 4AE VA450 SAW SPOOL	1
*	699200	KIT SPRING PACK 6.5-19 BAR STD VA450	1
*	53385	KIT, B-SIDE - COVER 450/300	1
*	20099916	KIT EC-CAP COMPLETE U/M6 VA450/VA300 END CAP A W/ STROKE LIMITER	1
6	699190	24 VDC SOLENOID AMP W ORIFICE 0.8 MM	2
7	56051	CARTRIDGE, PORT RELIEF K220-WPRV-380	2
8	56472	K220-WPRV-330 330 BAR PORT RELIEF VALVE	2
9	699170	SUPPLY REDUCER L90-LSR	2
10	55734	COMPENSATOR, MAIN-TOOL-STK- 450 VALVE	1
11	699180	1.00MM PILOT ORIFICE	2

***MEANS NOT SHOWN**

H200-00236 - WS300 MAIN VALVE SECTION - SQUIRT BOOM (SQUIRT ARM DANGLE PROCESSOR)

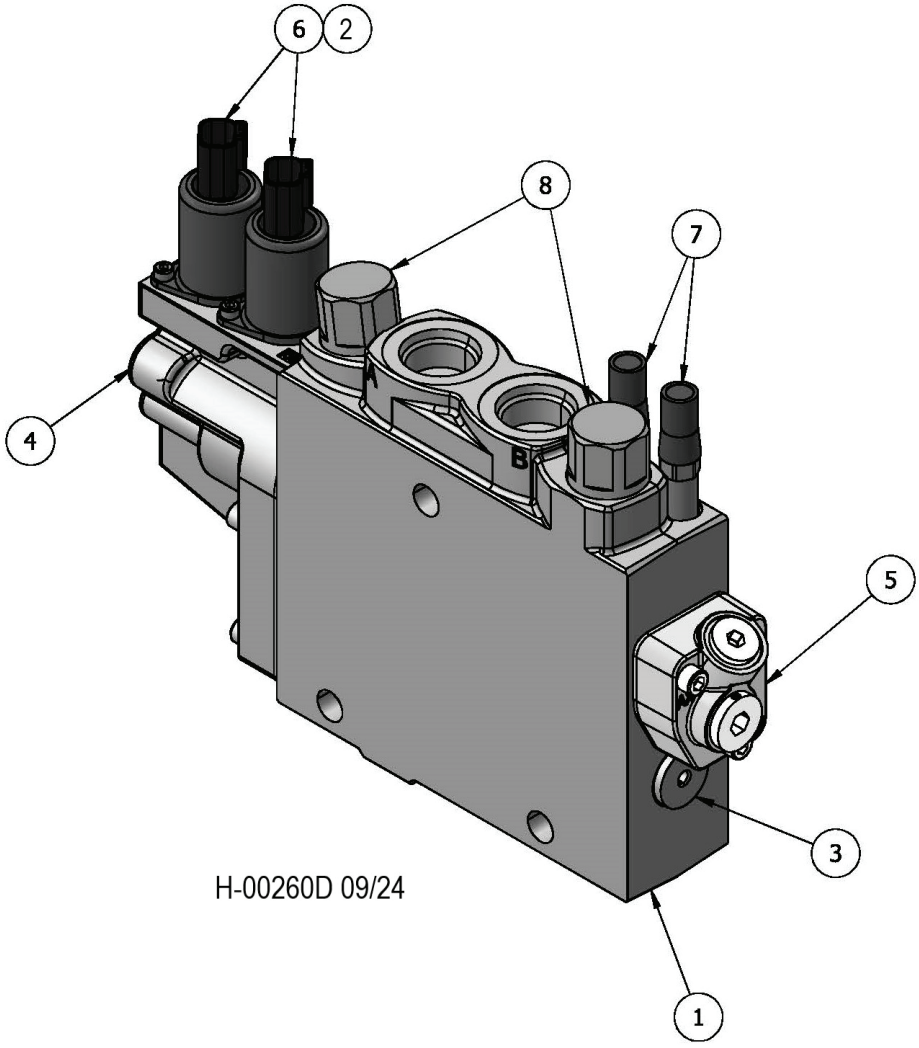

Item	Part #	Description	Qty.
1	20108835	VA300 BUILD PROGRAM WORK SECTION	1
2	699180	1.00MM PILOT ORIFICE	2
3	20106632	K1 COMP KIT VA300	1
4	20099915	KIT EC-CAP COMPLETE U VA450/VA300 ENDCAP W/O STROKE LIMITER	1
5	20107604	KIT B-SIDE COVER, U/U VA450/VA300 CAP B W/ #8 SAE PLUG	2
6	696080	SOLENOID VALVE 24VDC ORIFICE 0.8MM DEUTS	2
7	699170	SUPPLY REDUCER L90-LSR	2
8	19217271	PCL185-250-20 RELIEF 9120029915	2
*	20102517	VA300 SQUIRT 3AJ SPOOL	1
*	20099909	KIT SPRING PACK 6 5-19 BAR STD VA450/VA300 SPRING PACK	1

***MEANS NOT SHOWN**

H200-00236 - WS300 MAIN VALVE SECTION - ROTATE
(SQUIRT ARM DANGLE PROCESSOR)

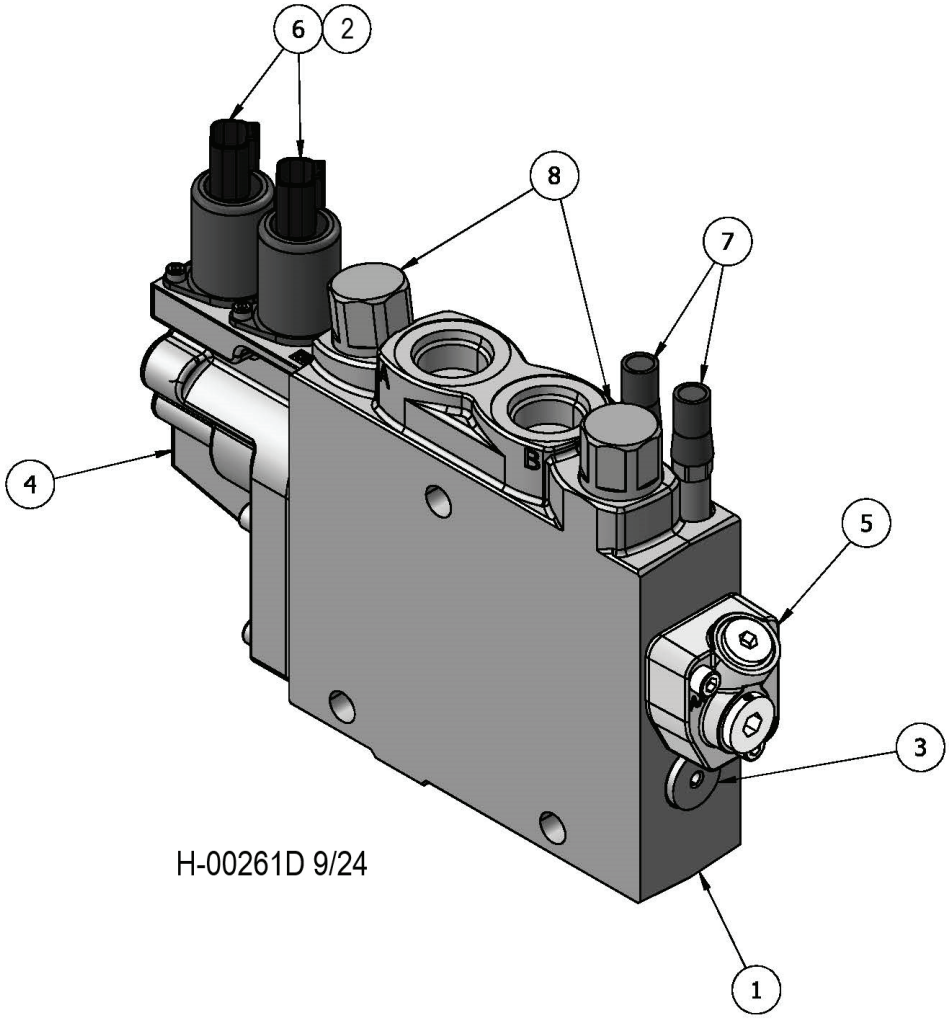

Item	Part #	Description	Qty.
1	20108822	VA300 BUILD PROGRAM WORK SECTION	1
2	699180	1.00MM PILOT ORIFICE	2
3	20106632	K1 COMP KIT VA300	1
4	20099915	KIT EC-CAP COMPLETE U VA450/VA300 ENDCAP W/O STROKE LIMITER	1
5	20107604	KIT B-SIDE COVER, U/U VA450/VA300 CAP B W/ #8 SAE PLUG	1
6	696080	SOLENOID VALVE 24VDC ORIFICE 0.8MM DEUTS	2
7	699170	SUPPLY REDUCER L90-LSR	2
8	19217271	PCL185-250-20 RELIEF 9120029915	2
*	20101857	VA300 GRAPPLE ROTATE/BLAD 3AX SPOOL	1
*	20099909	KIT SPRING PACK 6 5-19 BAR STD VA450/VA300 SPRING PACK	1

*** MEANS NOT SHOWN)**

H200-00237 - WS300 MAIN VALVE SECTION - CAB LEVEL (SQUIRT ARM DANGLE PROCESSOR)

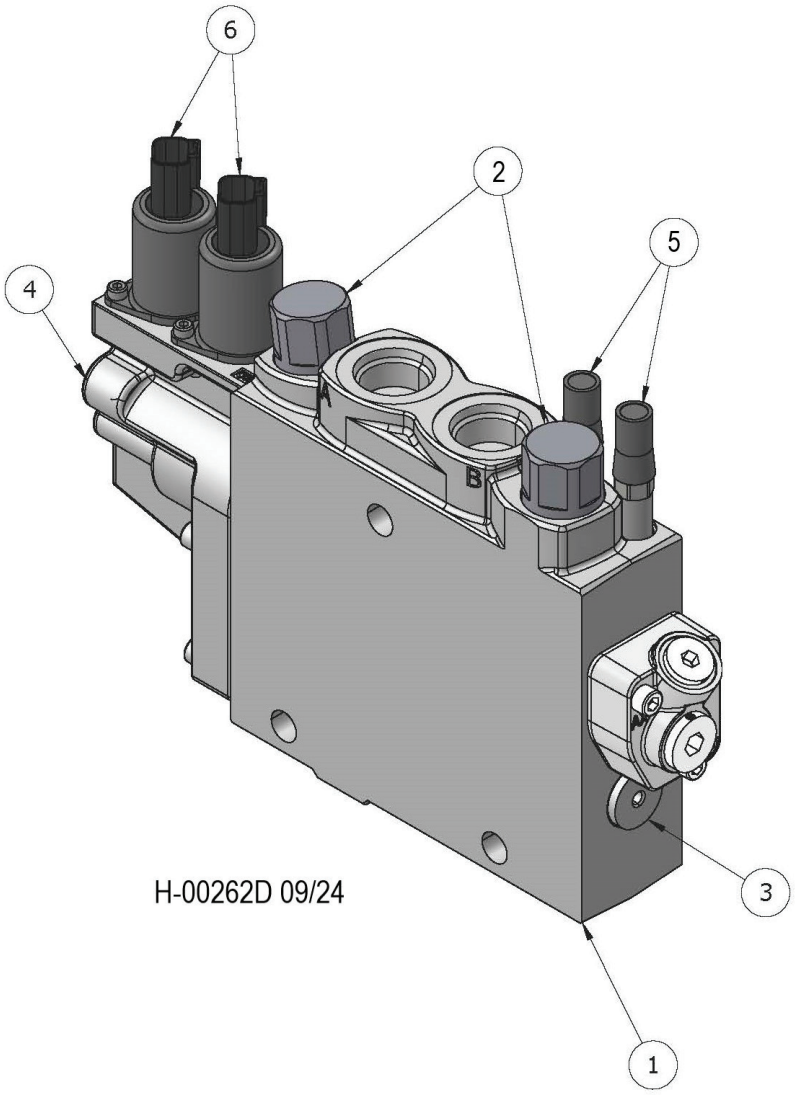

Item	Part #	Description	Qty.
1	20108705	VA300 BUILD PROGRAM WORK SECTION	1
2	19217272	280 BAR WP RELIEF 9120029916	2
3	20106632	K1 COMP KIT VA300	1
4	20099915	KIT EC-CAP COMPLETE U VA450/VA300 ENDCAP W/O STROKE LIMITER	1
5	699170	SUPPLY REDUCER L90-LSR	2
6	696080	SOLENOID VALVE 24VDC ORIFICE 0.8MM DEUTS	2
*	20099965	VA300 LEVEL 3AW SPOOL	1
*	20099909	KIT SPRING PACK 6 5-19 BAR STD VA450/VA300 SPRING PACK	1
*	699180	1.00MM PILOT ORIFICE	2

*** MEANS NOT SHOWN)**

H200-00238 - WS300 MAIN VALVE SECTION - OUTLET (SQUIRT ARM DANGLE PROCESSOR)

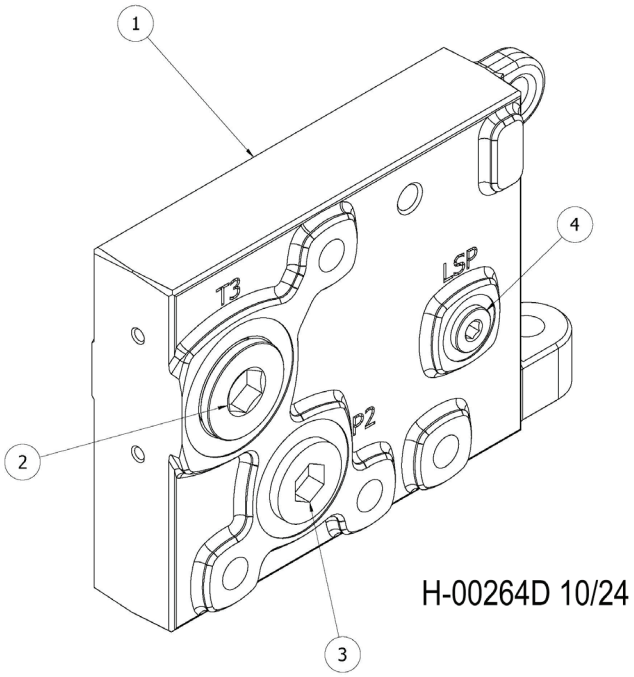

Item	Part #	Description	Qty.
1	20110351	VA300/450 BUILD PROGRAM END SECTION	1
2	19208810	HOLLOW HEX PLUG SAE-ORB	1
3	19207916	HOLLOW HEX PLUG	1
4	19215123	PLUG #6 SAE HOLLOW HEX	1

H200-00230 - BOOM PLATE HYD. FITTINGS - DANGLE PROCESSOR ATTACHMENTS (W450/W300 VALVE)

NOTE: HYDRAULIC FITTINGS GET 545 LOCTITE™

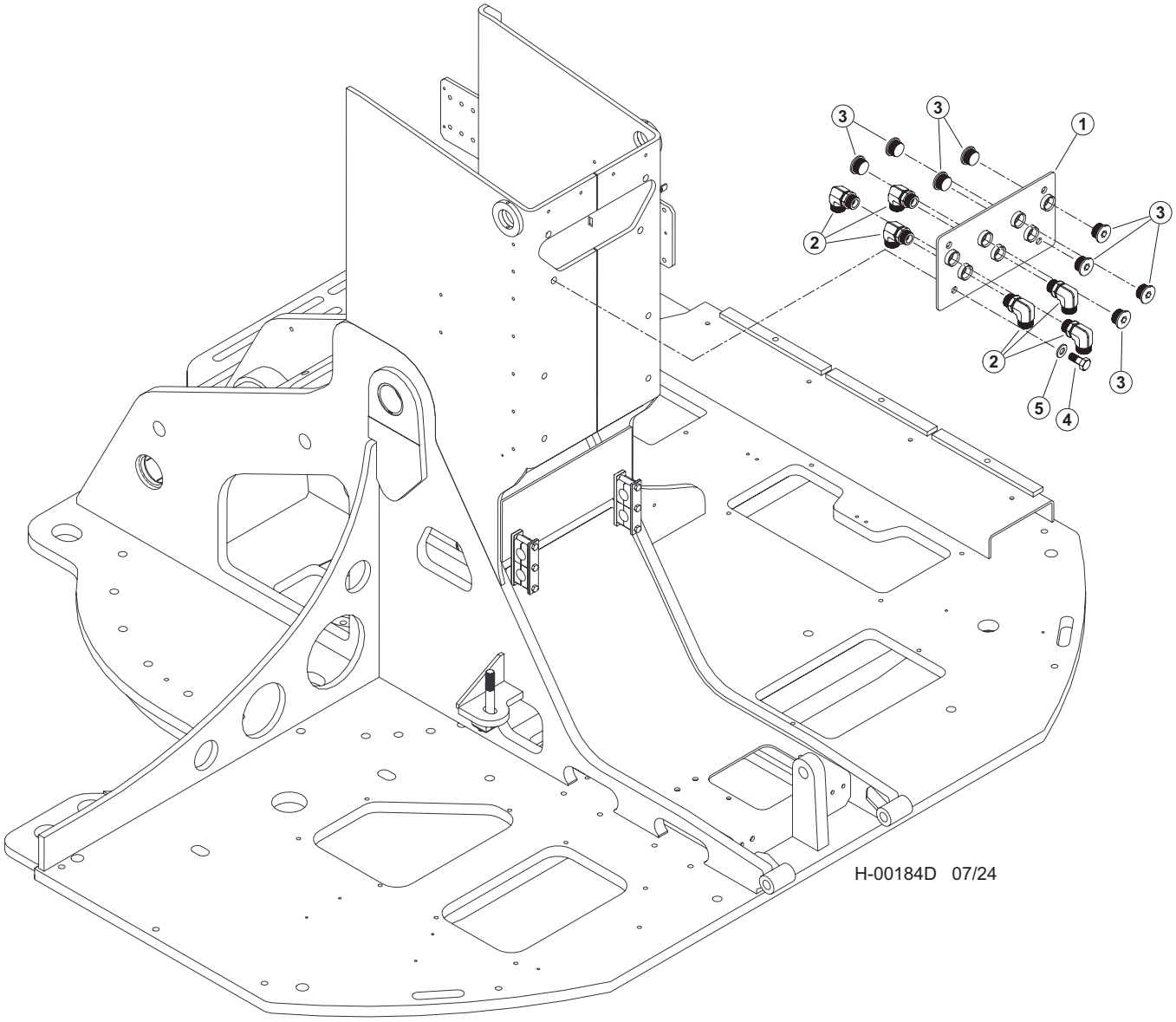

Item	Part #	Description	Qty.
	65882	KIT, HYD FITTING, BH, DISCSAW BASIC	1
1	60278	WELDMENT, BUNCHER BOOM BH PLATE	1
2	15528	ELBOW, 90 - FF1868T-1616S	6
3	19847	PLUG - 6408-HHP-16	8
4	10739	BOLT - .5” X 1.5”	4
5	10804	WASHER, FLAT - .5”	4

H100-00340 - CAB LEVELING HYD. HOSE LOWER CONNECTIONS
ROTARY MAINFOLD TO CYLINDERS

NOTE: HYDRAULIC FITTINGS GET 545 LOCTITE™

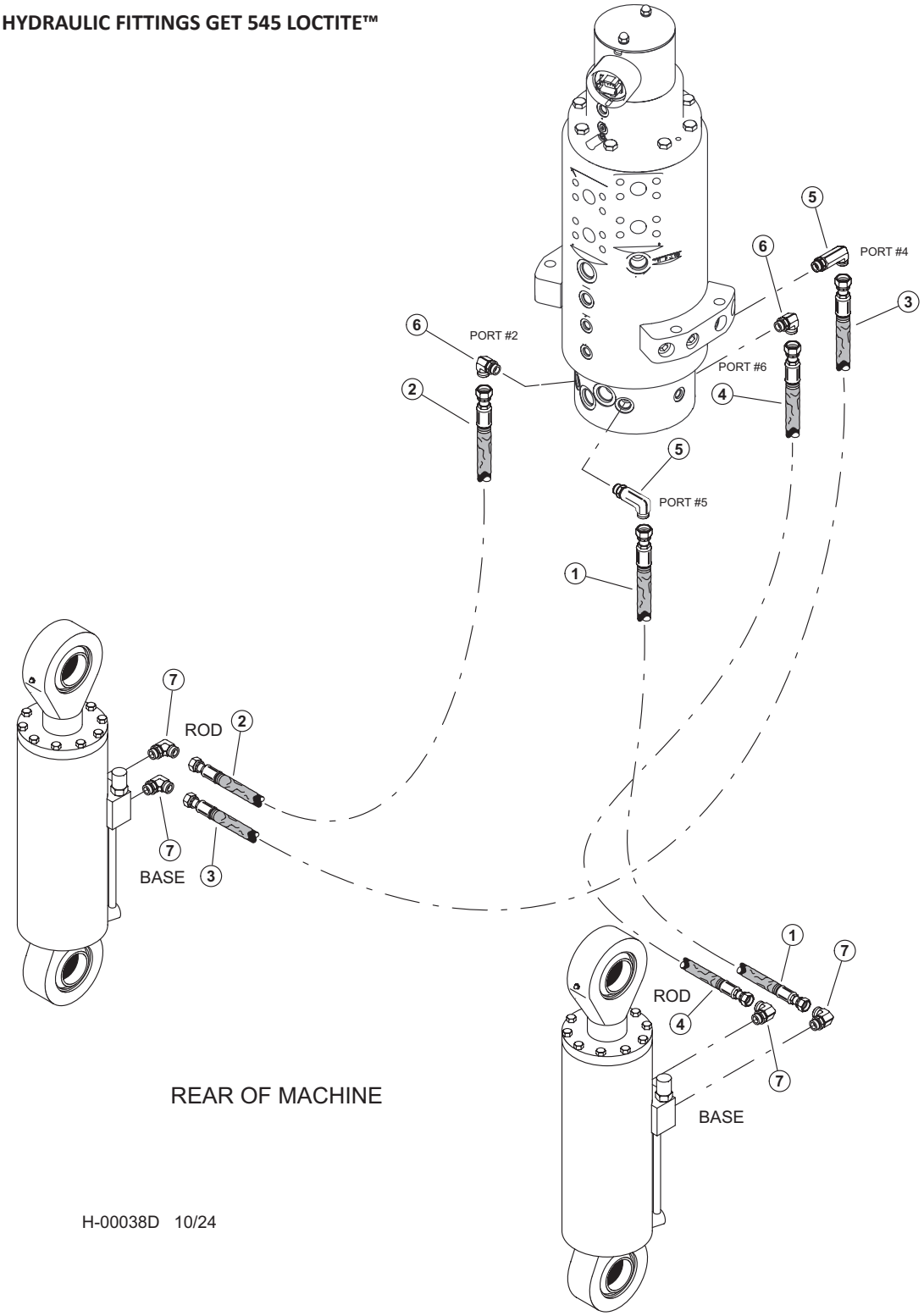

H-00038D 10/24

H100-00340 - CAB LEVELING HYD. HOSE LOWER CONNECTIONS ROTARY MAINFOLD TO CYLINDERS

Item	Part #	Description	Qty.
	57457	**KIT, FITTING - TRACK LEVELING**	1
	57947	**KIT, FITTING TRACK LEVEL**	1
1	65892 - (65891 - KIT)	HOSE, HYD, 787TC30 08-08OS-08OS **- (RM #5 TO RH CYL ROD)**	1
2	65895 - (65891 - KIT)	HOSE, HYD, 787TC44 08-08OS-08OS **- (RM #2 TO RH CYL BASE)**	1
3	65894 - (65891 - KIT)	HOSE, HYD, 787TC41.5 08-08OS-08OS **- (RM #4 TO LH CYL ROD)**	1
4	65952 - (65891 - KIT)	HOSE, HYD, 787TC40 08-08OS-08OS **- (RM #6 TO LH CYL BASE)**	1
5	57445	FITTING, 8 CC5OLO-S	2
6	16360	ELBOW, 90 - FF1868T-0808S	1
7	15154	ELBOW, 90 - FF1868T-0810S	1

H100-00350 - LEVELING CARBODY HOSE & FITTINGS - (RM. TO BULKHEAD & RH TRACK MOTOR FITTINGS)

NOTE: HYDRAULIC FITTINGS GET 545 LOCTITE™

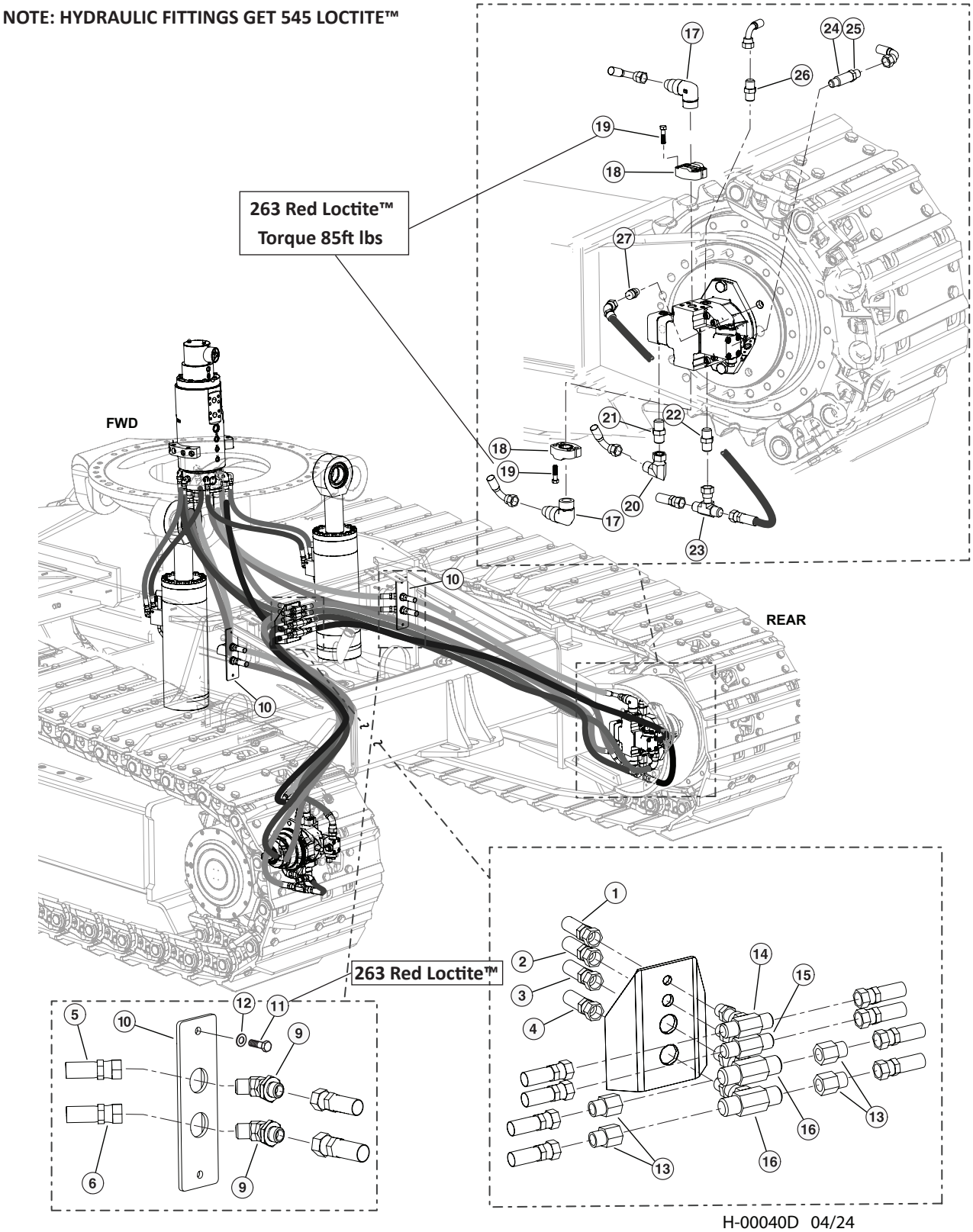

H-00040D 04/24

H100-00350 - LEVELING CARBODY HOSE & FITTINGS - (RM. TO BULKHEAD & RH TRACK MOTOR FITTINGS)

Item	Part #	Description	Qty.
	57458	**KIT, FITTING - TRACK TRUNK**	1
	57457	**KIT, FITTING - TRACK LEVELING**	1
1	55306 - (KIT)	HOSE ASSY - 387TC50 04-04OS-04OS-W - (SHIFT - RM #3 TO BULKHEAD)	1
2	55306 - (KIT)	HOSE ASSY - 387TC51 06-06OS-06OS-W - (BRAKE - RM #1 TO BULKHEAD)	1
3	55306 - (KIT)	HOSE ASSY - 187TC51 12-12OS-12OS-W - (FLUSH - RM #7 TO BULKHEAD)	1
4	55306 - (KIT)	HOSE ASSY - 187TC58 12-12OS-12OS-W - (CASE - RM #1 TO BULKHEAD)	1
5	55306 - (KIT)	HOSE ASSY - 797TC60 16-16OS-16OS-SW - (DRIVE LINE - RM #11 TO TOP RH BULKHEAD)	1
6	55306 - (KIT)	HOSE ASSY - 797TC60 16-16OS-16OS-SW - (DRIVE LINE - RM #9 TO BOTTOM RH BULKHEAD)	1
9	54316	ELBOW, BULKHEAD UNION 45DEG #16	2
10	60344	PLATE, TRUNK - BH (TL)	1
11	11707	BOLT - .375” X 1” **263 RED LOCTITE™**	2
12	15528	WASHER, SAE FLAT - .375”	2
13	18581	CONNECTOR, REDUCER - ORS FF2281T-0812S	4
14	52901	TEE, BULKHEAD BRANCH - 4	1
15	52902	TEE, BULKHEAD BRANCH - 6	1
16	53192	FITTING, BULKHEAD BRANCH TEE- 12 WJLO-WL	2
17	15228	ELBOW, 90 - FF1868T-1616S	4
18	58359	CONNECTOR,FLANGE PAD-W48-16-16U-M12 BLK	4
19	1139657	BOLT, M12-1.75 X 45MM L 10MM HEX DRIVE **263 RED LOCTITE™ (TORQUE 85FT LBS)**	8
20	15145	ELBOW, 90 SWIVEL - FF2098T-0404S	2
21	53157	FITTING, CONNECTOR - #4 ORF - 14MM	2
22	54795	CONNECTOR, STR ORIFICED .04” TRACK MOTOR	2
23	52900	SWIVEL, NUT BRANCH TEE #6	2
24	53651	FITTING, FLUSHING ORIFICE - TRACK MOTOR	2
25	15117	CONNECTOR, STR - FF1852T-0808S	2
26	52439	CONNECTOR, MALE ISO 6149	2
27	53124	FITTING, MALE CONNECTOR ISO 6149	

H100-00360 - LEVELING CARBODY HOSE & FITTINGS - (RM. TO BULKHEAD & LH TRACK MOTOR FITTINGS)

NOTE: HYDRAULIC FITTINGS GET 545 LOCTITE™

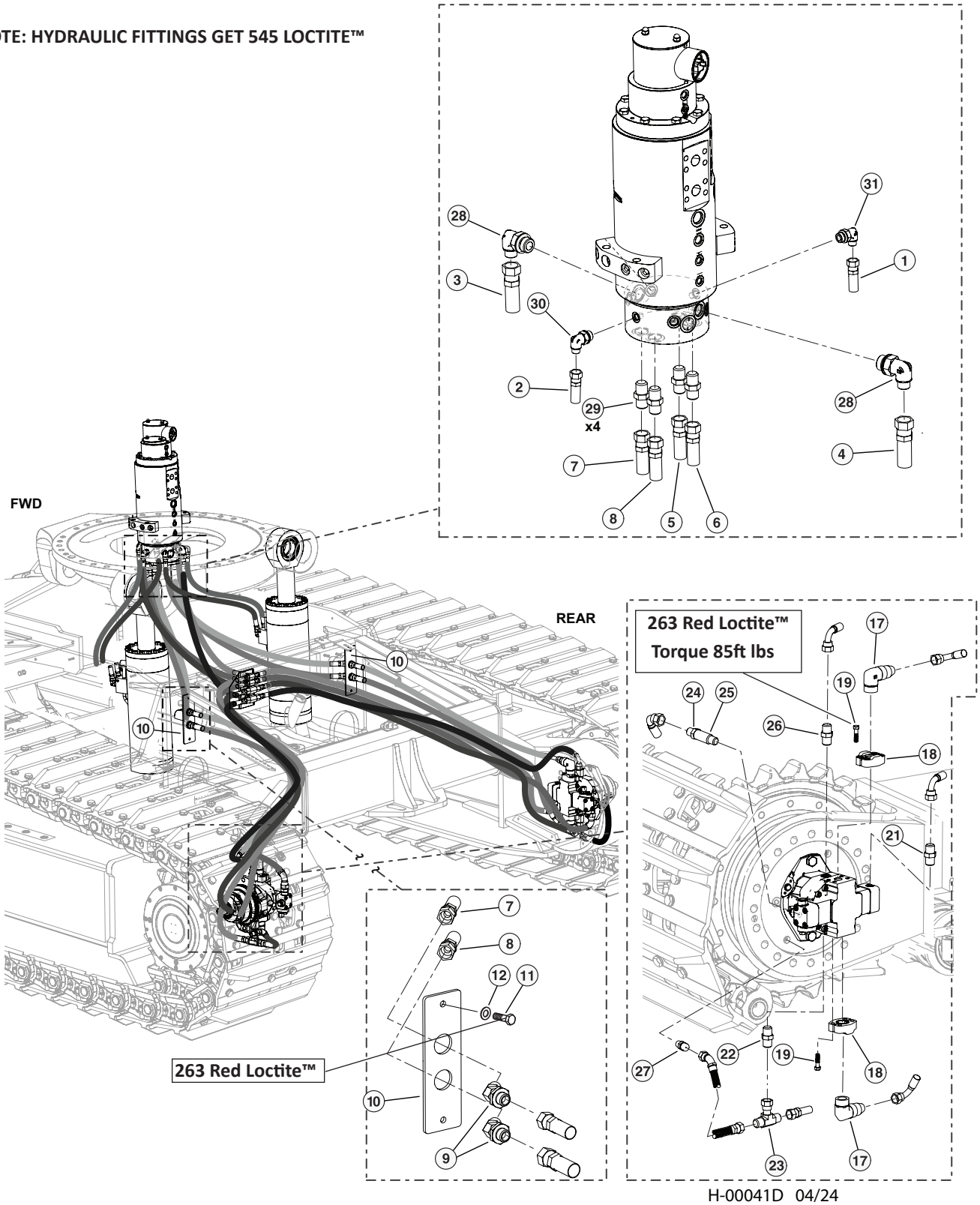

H-00041D 04/24

H100-00360 - LEVELING CARBODY HOSE & FITTINGS - (RM. TO BULKHEAD & LH TRACK MOTOR FITTINGS)

Item	Part #	Description	Qty.
	57458	**KIT, FITTING - TRACK TRUNK**	1
	57457	**KIT, FITTING - TRACK LEVELING**	1
1	55306 - (KIT)	HOSE ASSY - 387TC50 04-04OS-04OS-W - (SHIFT - RM #3 TO BULKHEAD)	1
2	55306 - (KIT)	HOSE ASSY - 387TC51 06-06OS-06OS-W - (BRAKE - RM #1 TO BULKHEAD)	1
3	55306 - (KIT)	HOSE ASSY - 187TC51 12-12OS-12OS-W - (FLUSH - RM #7 TO BULKHEAD)	1
4	55306 - (KIT)	HOSE ASSY - 187TC58 12-12OS-12OS-W - (CASE - RM #1 TO BULKHEAD)	1
5	55306 - (KIT)	HOSE ASSY - 797TC60 16-16OS-16OS-SW - (DRIVE LINE - RM #11 TO TOP RH BULKHEAD)	1
6	55306 - (KIT)	HOSE ASSY - 797TC60 16-16OS-16OS-SW - (DRIVE LINE - RM #9 TO BOTTOM RH BULKHEAD)	1
7	55306 - (KIT)	HOSE ASSY - 797TC62 16-16OS-16OS-SW - (DRIVE LINE - RM #12 TO TOP LH BULKHEAD)	1
8	55306 - (KIT)	HOSE ASSY - 797TC60 16-16OS-16OS-SW - (DRIVE LINE - RM #10 TO BOTTOM LH BULKHEAD)	1
9	54316	ELBOW, BULKHEAD UNION 45DEG #16	2
10	60344	PLATE, TRUNK - BH (TL)	1
11	11707	BOLT - .375” X 1” **263 RED LOCTITE™**	2
12	15528	WASHER, SAE FLAT - .375”	2
17	15228	ELBOW, 90 - FF1868T-1616S	2
18	58359	CONNECTOR,FLANGE PAD-W48-16-16U-M12 BLK	2
19	1139657	BOLT, M12-1.75 X 45MM L 10MM HEX DRIVE **263 RED LOCTITE™ (TORQUE 90FT LBS)**	8
21	53157	FITTING, CONNECTOR - #4 ORF - 14MM	1
22	54795	CONNECTOR, STR ORIFICED .04” TRACK MOTOR	1
23	52900	SWIVEL, NUT BRANCH TEE #6	1
24	15117	CONNECTOR, STR - FF1852T-0808S	1
25	53651	FITTING, FLUSHING ORIFICE - TRACK MOTOR	1
26	52439	CONNECTOR, MALE ISO 6149	1
27	53124	FITTING, MALE CONNECTOR ISO 6149	1
28	17688	ELBOW, 90 - FF1868T-1212S	2
29	15225	CONNECTOR, STR - FF1852T-1616S	4
30	16296	ELBOW, 90 - FF1868T-0606S	1
31	15133	ELBOW, 90 - FF1868T-0406S	1

H100-00370 - LEVELING CARBODY HOSE & FITTINGS - (FUEL SYSTEM)

NOTE: HYDRAULIC FITTINGS GET 545 LOCTITE™

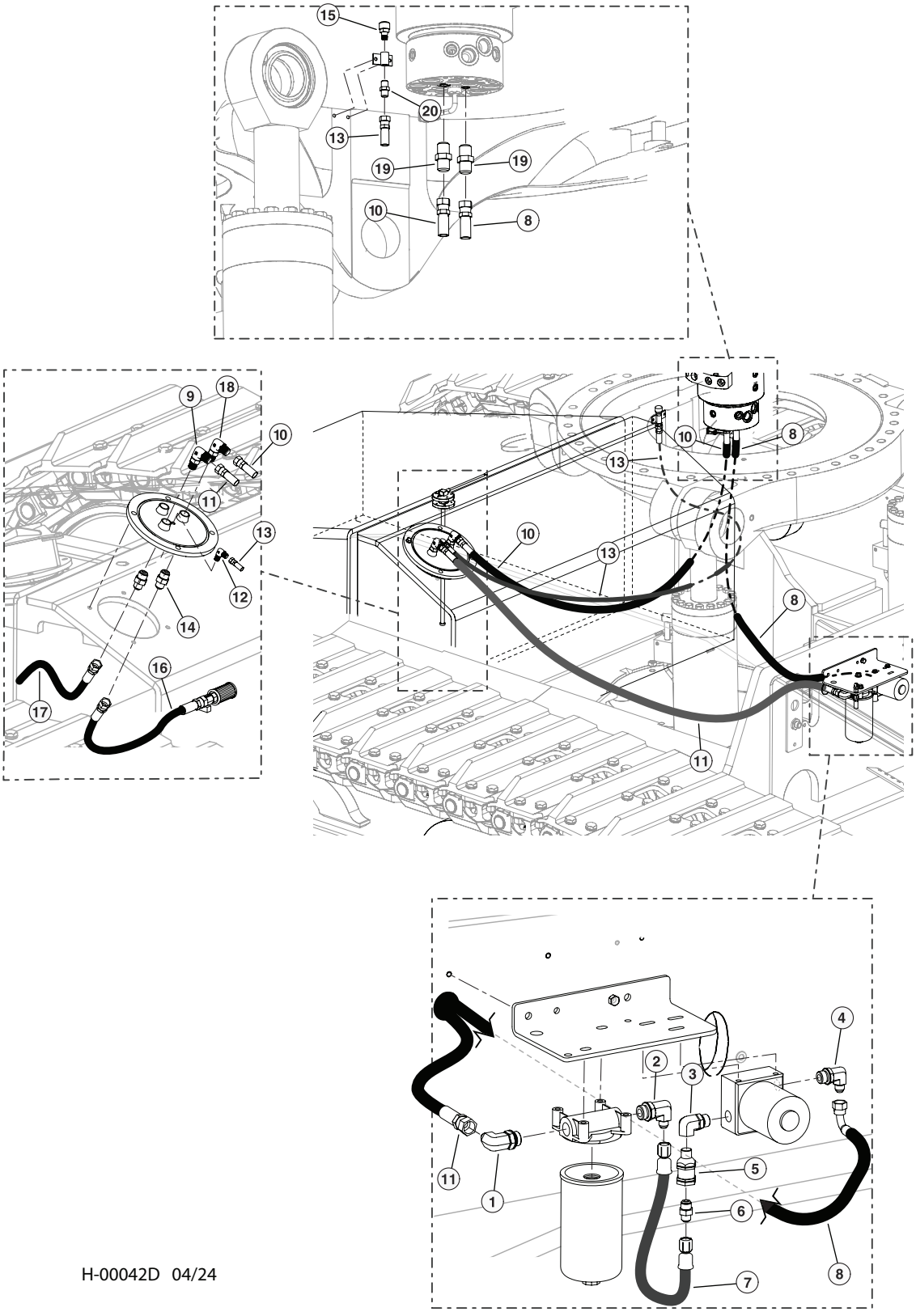

H-00042D 04/24

H100-00370 - LEVELING CARBODY HOSE & FITTINGS - (FUEL SYSTEM)

Item	Part #	Description	Qty.
	57457	KIT, FITTING - TRACK LEVELING	1
1	18109	ELBOW, 90 - 6801-8-10	1
2	53073	ELBOW, 90 6-JIC X 10-ORB)	1
3	57824	FITTING, ELBOW FEMALE - RAPTOR FUEL PUMP	1
4	15480	ELBOW, 90 - 6801-6	1
5	15652	VALVE, CHECK - HYDRAULIC/FUEL	1
6	16009	FITTING, 6 FTX-S PIPE-JIC	1
7	58064	HOSE, FUEL RAPTOR PUMP TRACK	1
8	55306 - (KIT)	HOSE ASSY - 221FR70 06-06JS-06J9-W - (FUEL PUMP OUT TO RM. FS)	1
9	15481	ELBOW, 90 - 6801-8	1
10	55306 - (KIT)	HOSE ASSY - 221FR78 06-06JS-06JS-W - (RM. FR TO FUEL TANK - RETURN)	1
11	55306 - (KIT)	HOSE ASSY - 221FR70 08-08JS-08JS-W - (FUEL SUPPLY TO FILTER IN)	1
12	15505	ELBOW, 90 4-4 CLO-S	1
13	55306 - (KIT)	HOSE ASSY - 387TC75 04-04OS-04OS-W - (FUEL VENT)	1
14	15117	CONNECTOR, STR - FF1852T-0808S	2
15	54170	VENT, FUEL TANK	1
16	55306 - (KIT)	HOSE ASSY - 187TC42 08-08OS-08MP - (FUEL PICKUP - IN TANK)	1
17	55306 - (KIT)	HOSE ASSY - 187TC20 08-08OS-OPEN - (FUEL RETURN - IN TANK)	1
18	53145	FITTING, 6-8 C50X-S - JIC	1
19	53887	FITTING, FUEL - ROTARY MANIFOLD #6 JIC	2
20	15131	CONNECTOR, STR - FF2031T-0404S	1

H100-00380 - LEVELING CARBODY HOSE & FITTINGS - (LEVELING CYLINDER BASE & RM GREASE LINES)

NOTE: HYDRAULIC FITTINGS GET 545 LOCTITE™

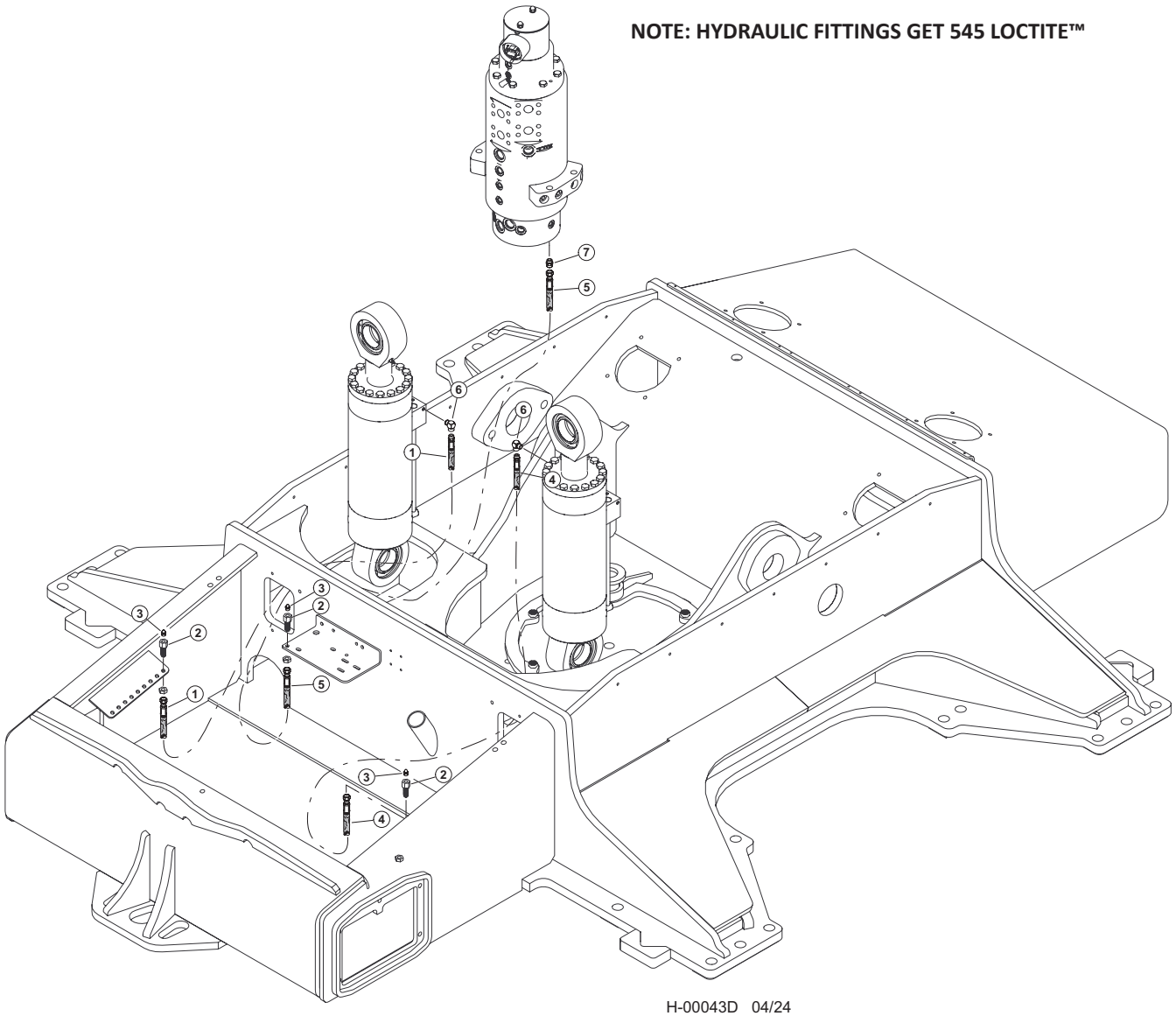

H-00043D 04/24

Item	Part #	Description	Qty.
	57457	**KIT, FITTING - TRACK LEVELING**	1
1	55306 - (KIT)	HOSE ASSY - HLBD72 02-02PS-04JS-W - (LEVEL - LEFT GREASE LINE)	1
2	15658	CONNECTOR, STR BULKHEAD - 2239-2-4S	2
3	10704	FITTING, GREASE - .125 NPT - STR	2
4	55306 - (KIT)	HOSE ASSY - HLBD72 02-02PS-04JS-W - (LEVEL - RIGHT GREASE LINE)	1
5	55306 - (KIT)	HOSE ASSY - HLBD76 02-04JS-04JS-W - (ROTARY MANIFOLD GREASE LINE)	1
6	22281	ELBOW, 1/8-27 NPTF(M), 1/8-17 NPTF(F),90	2
7	51887	CONNECTOR, STR - (4F50X-S)	1

H100-00390 - HYDRAULIC FITTING KIT - (TRACK)

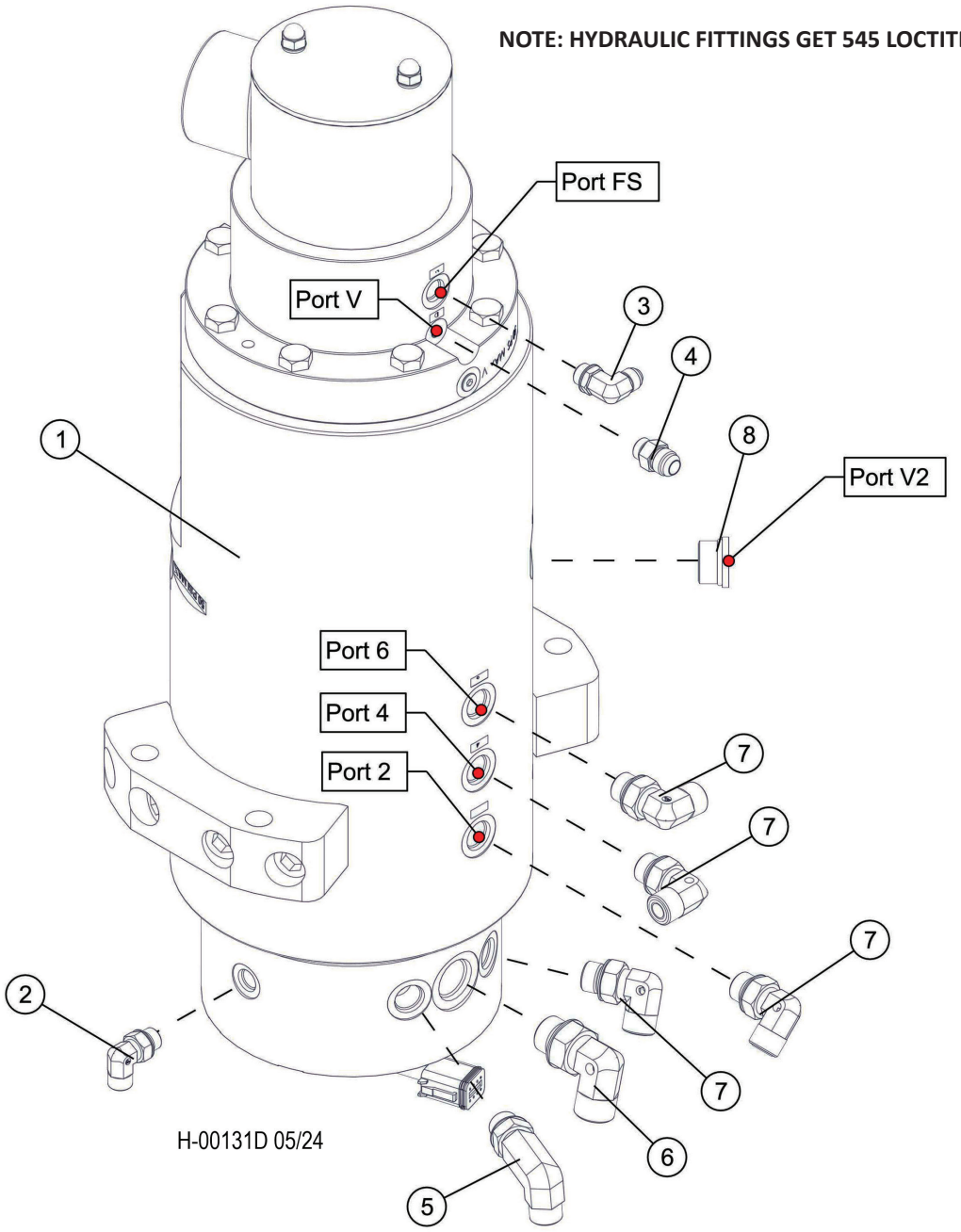

Item	Part #	Description	Qty.
1	650670	MANIFOLD, ROTARY - 14 PORT TRACK (HYDRO	1
2	15133	ELBOW, 90 - FF1868T-0406S	1
3	15480	ELBOW, 90 - 6801-6	1
4	15487	CONNECTOR, STR - 6400-6-4	1
5	57445	FITTING, 8 CC5OLO-S	1
6	17688	ELBOW, 90 - FF1868T-1212S	1
7	16360	ELBOW, 90 - FF1868T-0808S	4
8	15584	PLUG - 6408-HHP-12	1

H100-00400 - HYDRAULIC FITTING KIT - (TRACK)

NOTE: HYDRAULIC FITTINGS GET 545 LOCTITE™

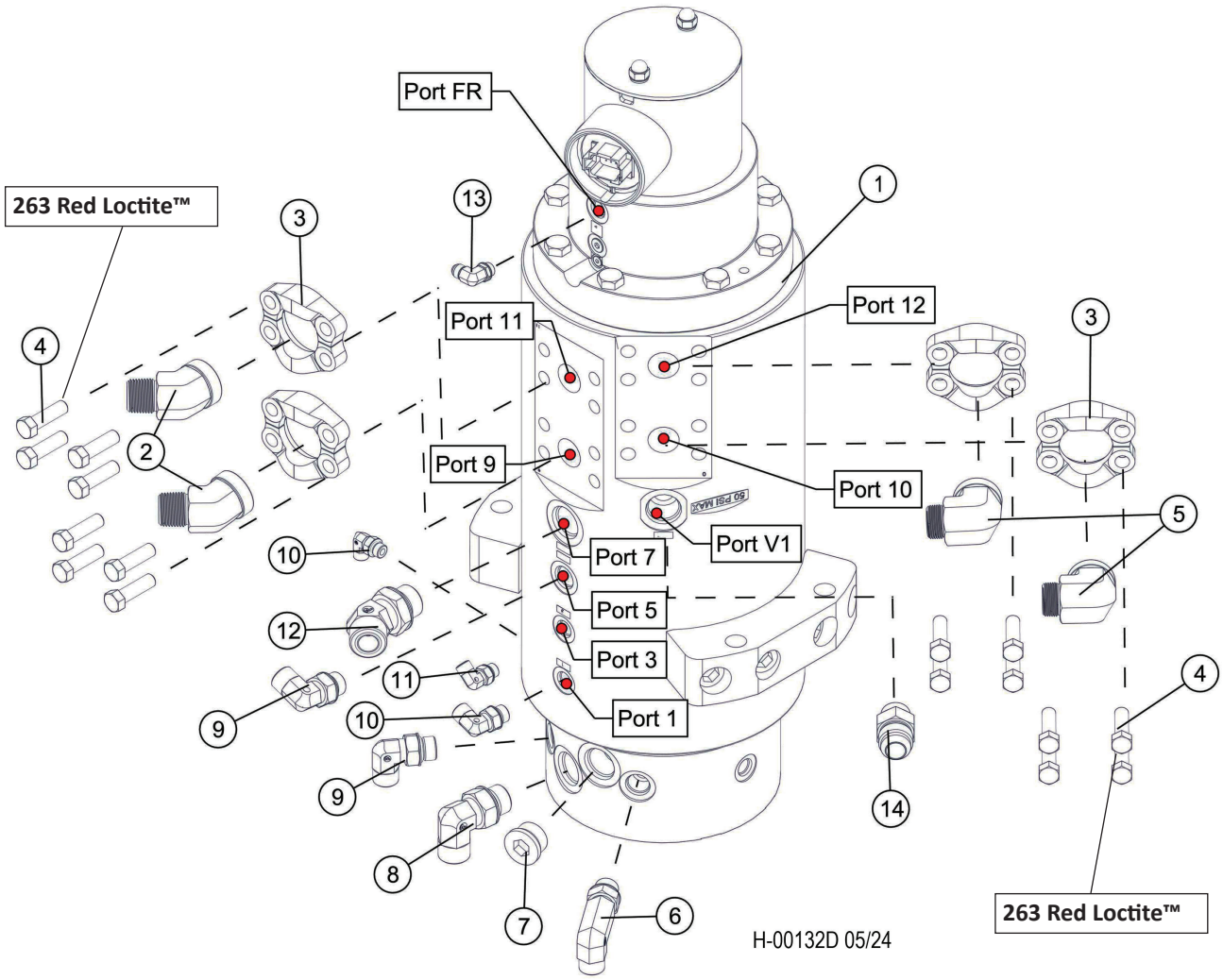

H100-00400 - HYDRAULIC FITTING KIT - (TRACK)

Item	Part #	Description	Qty.
1	650670	MANIFOLD, ROTARY - 14 PORT TRACK (HYDRO	1
2	57459	ADAPTOR, FLANGE 45DEG ORFS CODE 62	2
3	15113	KIT, SPLIT FLANGE - 1” (CODE 62)	4
4	15551	BOLT - 12MM-1.75P X 40MM **263 RED LOCTITE™**	16
5	20030	ADAPTER, 90 FLANGE - 16 LOEQ2-S (C62)	2
6	57445	FITTING, 8 CC5OLO-S	1
7	15584	PLUG - 6408-HHP-12	1
8	17688	ELBOW, 90 - FF1868T-1212S	1
9	16360	ELBOW, 90 - FF1868T-0808S	2
10	16296	ELBOW, 90 - FF1868T-0606S	2
11	15133	ELBOW, 90 - FF1868T-0406S	1
12	19127	ELBOW, 45 - FF2068T-1212S	1
13	15480	ELBOW, 90 - 6801-6	1
14	15496	CONNECTOR, STR - 6400-16-12	1

H100-00410 - HYDRAULIC FITTING KIT - (TRACK)

NOTE: HYDRAULIC FITTINGS GET 545 LOCTITE™

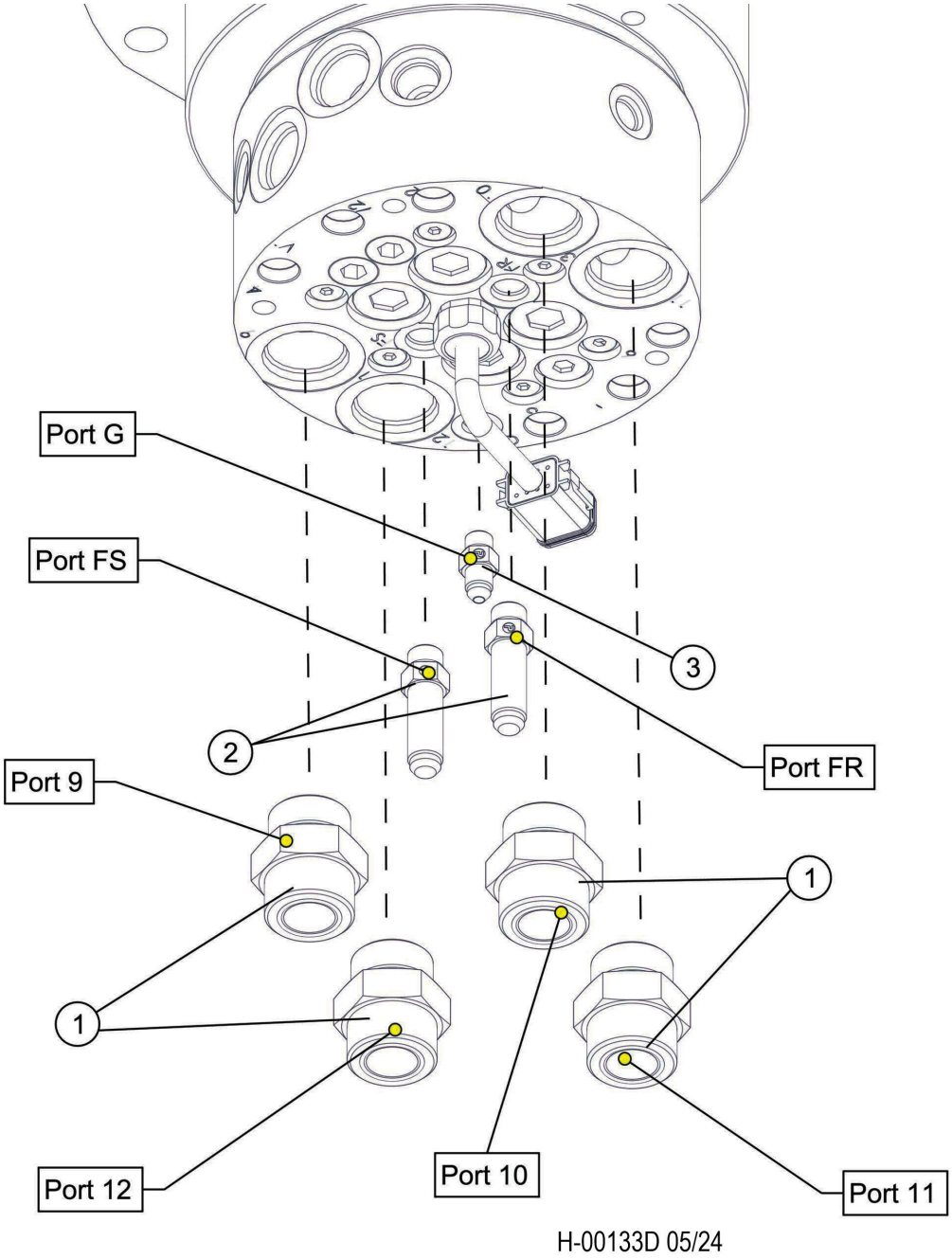

H-00133D 05/24

Item	Part #	Description	Qty.
1	15225	CONNECTOR, STR - FF1852T-1616S	4
2	53887	FITTING, FUEL - ROTARY MANIFOLD #6 JIC	2
3	51887	CONNECTOR, STR - (4F50X-S)	1

H100-00420 - HYDRAULIC FITTING KIT - (TRACK)

NOTE: HYDRAULIC FITTINGS GET 545 LOCTITE™

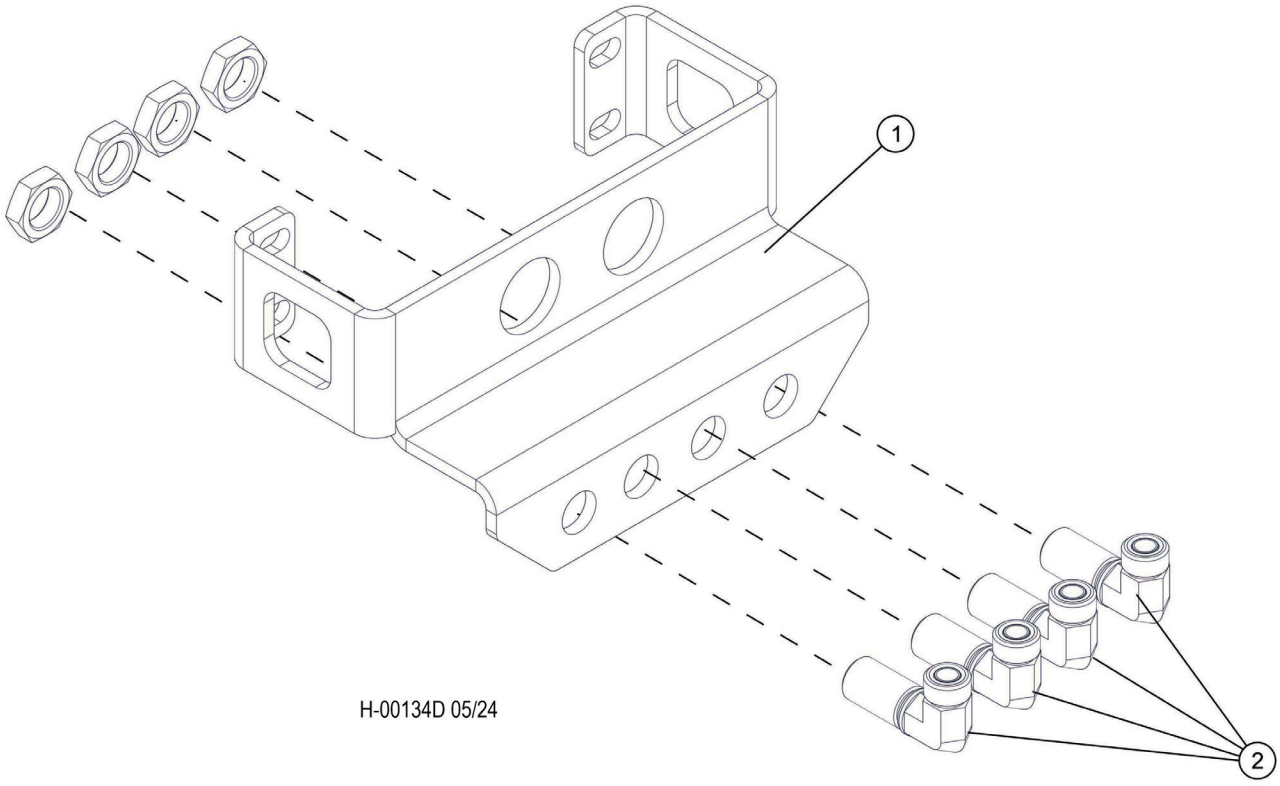

Item	Part #	Description	Qty.
1	60559	BULHEAD, FRONT - TM	1
2	24187	ELBOW, 90 BULKHEAD - 855BH-TT-08	4

H100-00421 - ROTARY MANIFOLD BREAKDOWN

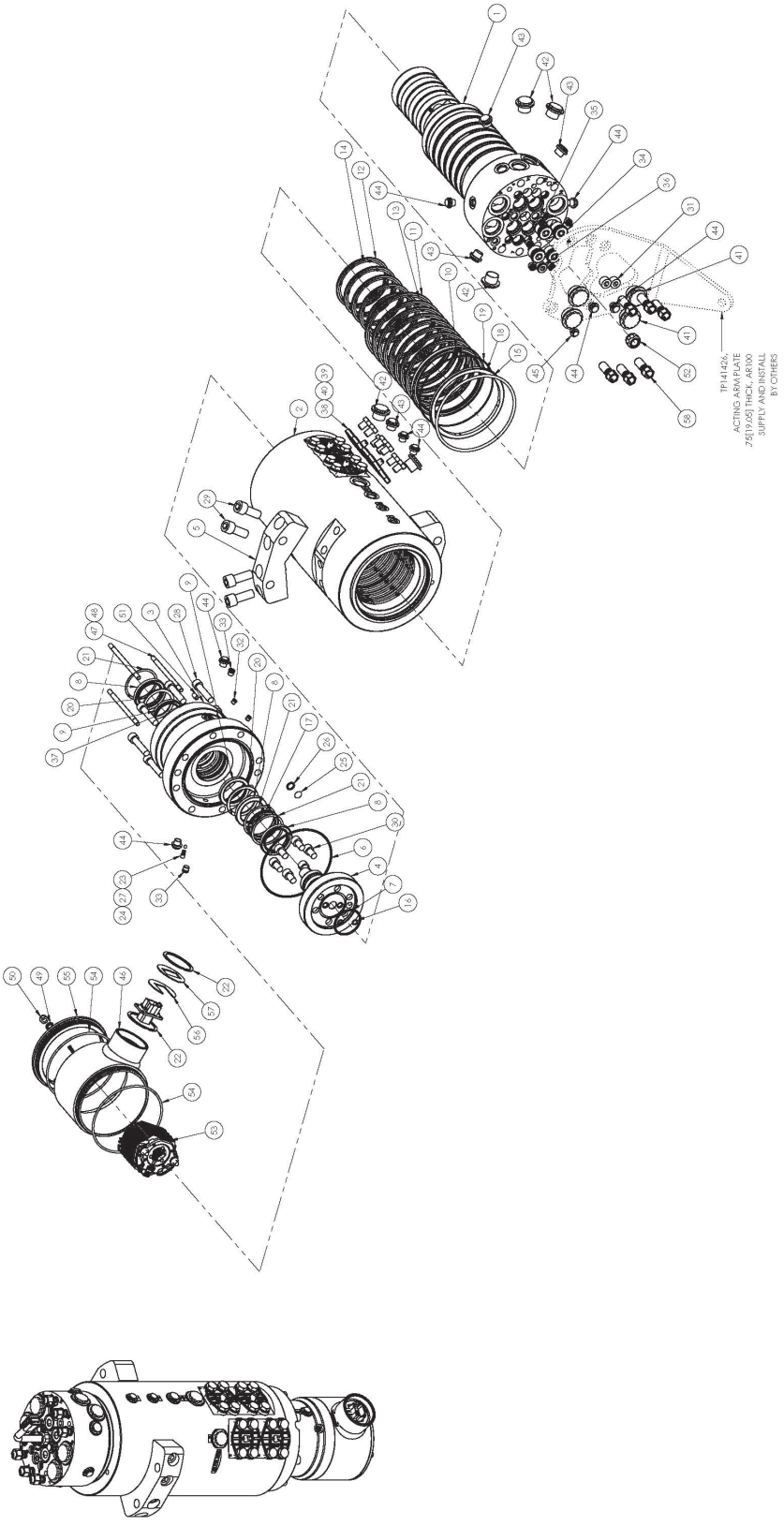

H100-00421 - ROTARY MANIFOLD BREAKDOWN

Item	Part #	Description	Qty.
	650670	MANIFOLD, ROTARY - 14 PORT TRACK	1
1	TP1414021	SPOOL, ROTARY	1
2	TP1414002	BARREL, ROTARY	1
3	HD141425	CAP, FUSE SECTION, OPEN, HD SLIP RING OPTION	1
4	HD1414006	RETAINER, SPOOL WITH FUEL	1
5	HD1214003	MOUNTING PLATE	2
6	N1470 - 258	ORING 6.000” x 6.250” x 0.125” c/s	1
7	N1470 - 227	ORING 2.125” x 2.375” x 0.125” c/s	1
8	HD050068080-V	ENVIRO SEAL 50mmX68X8 VITON	3
9	HD050065070-V	ENVIRO SEAL 50mmX65X7 VITON	2
10	HD141610	SEAL, ENVIRONMENTAL SHAFT, 140mm	1
11	N1173-70-359	ORING, HNBR 70, 5.750” x 6.125” x .188” c/s	8
12	N1173-70-346	ORING, HNBR 70, 4.125”x 4.500” x .188” c/s	5
13	RN 140-250-08GL	LOCSEAL, 140 MM	8
14	RN 100-250-08GL	LOCSEAL, 100 MM	5
15	U90 - 363	ORING URETHANE	1
16	V1476 - 012	ORING 1/2”X 3/8”X 1/16”, VITON	2
17	HD141415	RING, ENVIROMENT SEAL SPPRT	1
18	HD140105	LOCKRING FOR 140mm ENVIRO	1
19	MOR1600020/N	ORING 160mm X 164mm X 2mm C/S NBR70	1
20	WHM-256	SPIRAL SNAP RING	2
21	WH-267	SPIRAL SNAP RING	3
22	WHM-250	SPIRAL SNAP RING	2
23	62058	INSERT, ROTARY MANIFOLD	1
24	62059	SPRING, ROTARY MANIFOLD	1
25	TL-C5-190-30	TEMPERATURE LABEL	1
26	N1470 - 112	ORING	1
27	62057	BALL, ROTARY MANIFOLD	1
28	SHCS M12 X 55	SHCS METRIC G12.9	8
29	SHCS M16 X 40	SHCS METRIC G12.9	8
30	SHCS M12 X 20	SHCS METRIC G12.9	6
31	81145	1/2” NPT HEX PLUG FLUSH	2
32	22S - S02	#02 ORB ZLG PLUG SH	3
33	22S - S04	#04 ORB ZLG PLUG SH	2
34	HD002282	#12 ORB CUSTOM PLUG SH	4
35	22S - S05	#05 ORB ZLG PLUG SH	6
36	22S - S08	#08 ORB ZLG PLUG SH	1
37	22S - S06	#06 ORB ZLG PLUG SH	1
38	HDCP-XP-1AI	PLUG	4
39	MOR0360040/N	ORING, 36.0mm X44.0mm X4.0mm	4
40	HHCS M12 X 16MM	HEXBOLT M12X16 G10.9	16
46	E0000176	COVER WELDMENT, SLIPRING	1
47	TR-0.31-05.25	5/16-18 x 5.25” LENGTH	3
48	HD091418	HEAT SHRINK TUBE	3
49	33156	SEAL WASHER 5/16	3
50	70961	ACORN NUT 5/16-18	3
51	SHSS 05-18-0.625	SET SCREW, 5/16-18UNC X 5/8LG	1
52	HD121437	FITTING, LT 0.500” GRN	1
53	E08080202	ELC SLIP RING, 6 POWER, 2 SIGNAL	1
54	N1470 - 257	ORING, 70 DUROMETER 5.875” X 6.125” X 0.125”C/S	2
55	E0000177	CAP, SLIP RING COVER	1
56	HD121419	PLATE, CONNECTOR MOUNT	1
57	HD121420	PLATE, CONNECTOR MOUNT	1
58	689540	BOLT, CONE LUG STYLE W HOLE	6

H200-00100 - HYDRAULIC FITTING KIT - (TRACK)

NOTE: HYDRAULIC FITTINGS GET 545 LOCTITE™

LEFT SIDE

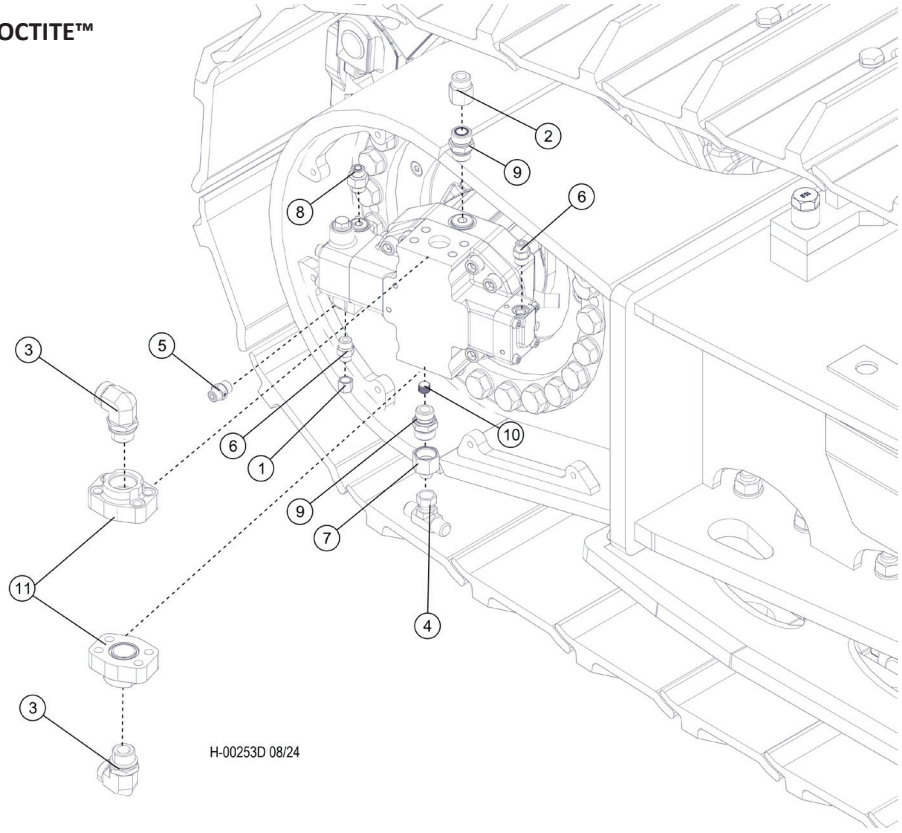

RIGHT SIDE

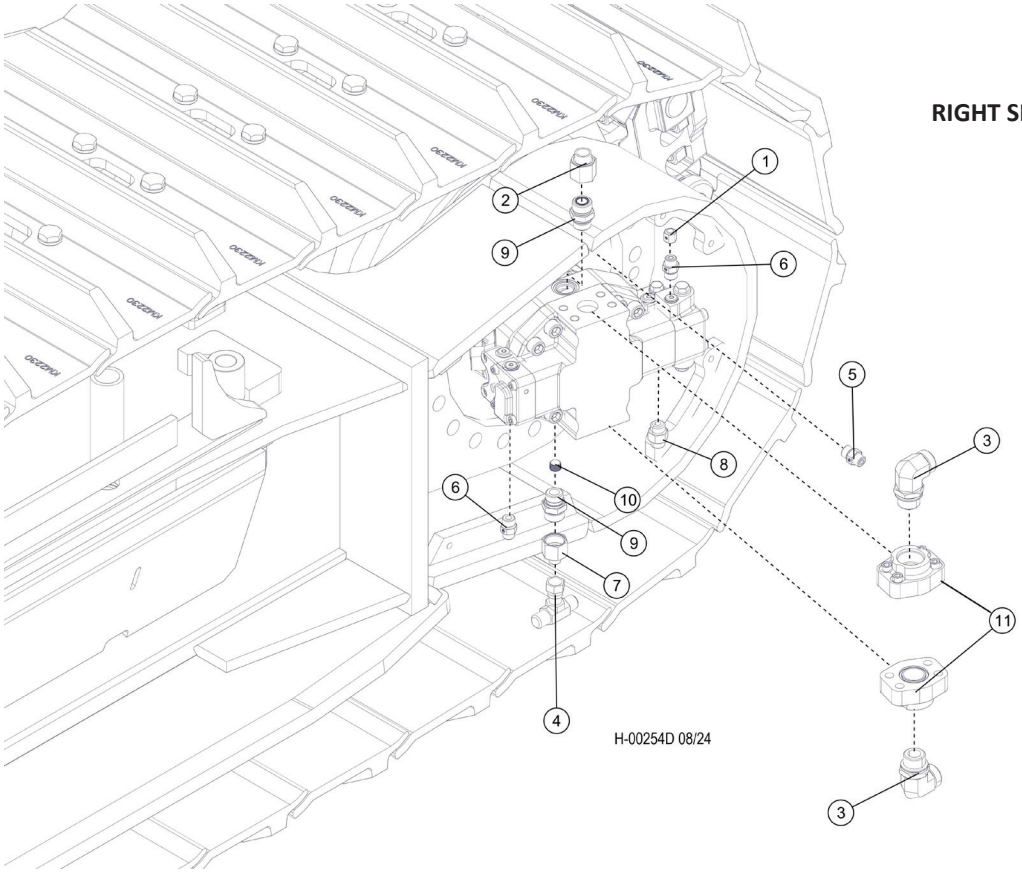

H100-00100 - HYDRAULIC FITTING KIT - (TRACK)

Item	Part #	Description	Qty.
1	15435	CAP - FF9863-04S	2
2	18581	CONNECTOR, REDUCER - ORS FF2281T-0812S	2
3	50470	ELBOW, 90 - 849-TT0-16X20	4
4	52900	SWIVEL, NUT BRANCH TEE #6	2
5	53124	FITTING, MALE CONNECTOR ISO 6149	2
6	53157	FITTING, CONNECTOR - #4 ORF - 14MM	4
7	57484	FITTING, 12-6 TRLON	2
8	57504	FITTING, METRIC 8M22F87OMLOS	2
9	57506	FITTING, METRIC 12M27F82EDMLOS	4
10	58587	PLUG, 3/8 PIPE HEX HEAD BRASS	2
11	58360	CONNECTOR,FLANGE PAD-W48-20-20U-M14 BLK	4

H100-00430 - LEVELING CARBODY GREASE LINES AND FITTINGS

NOTE: HYDRAULIC FITTINGS GET 545 LOCTITE™

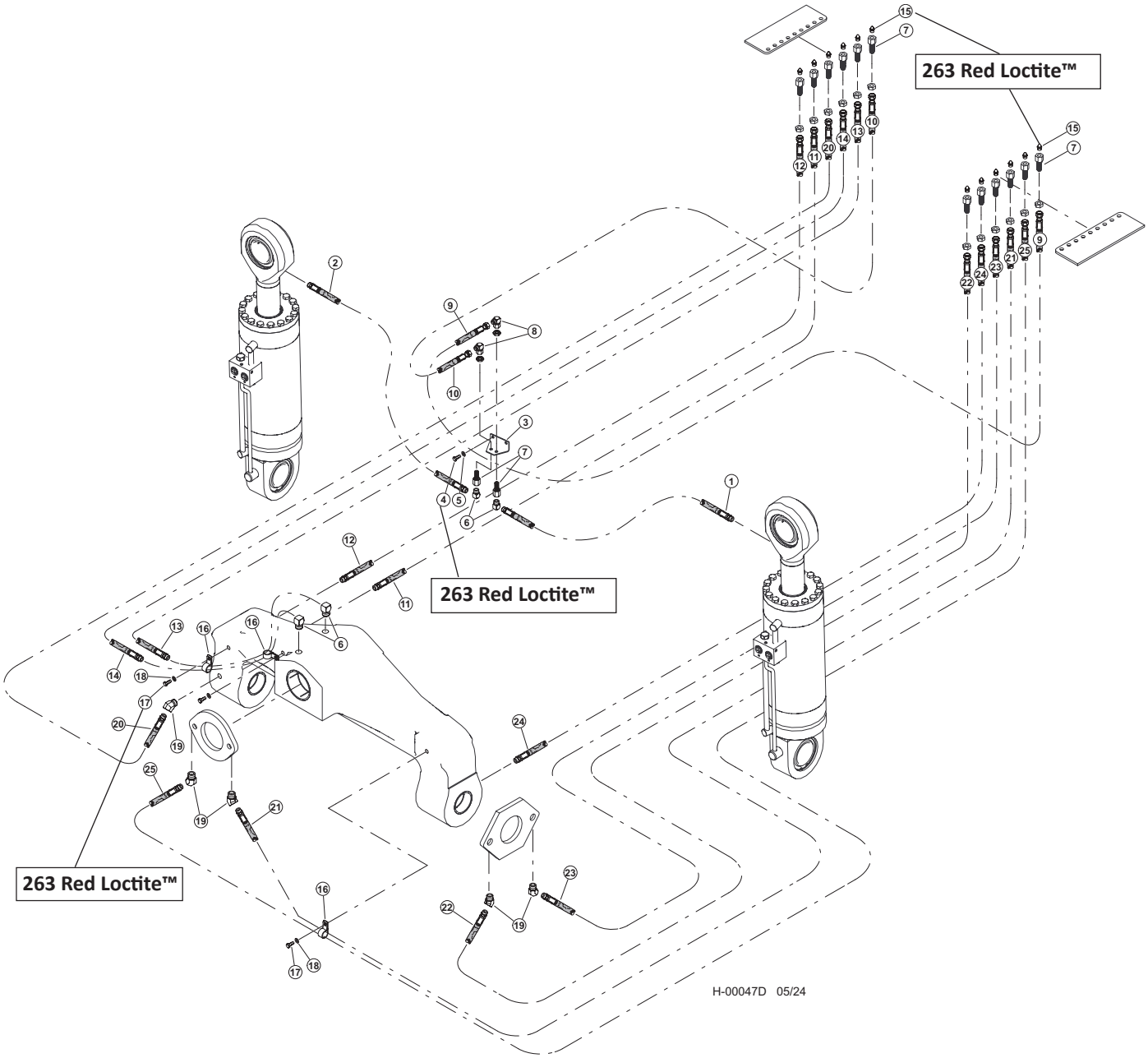

H100-00430 - LEVELING CARBODY GREASE LINES AND FITTINGS

Item	Part #	Description	Qty.
	57457	**KIT, FITTING - TRACK LEVELING**	1
1	53262 - (KIT)	HOSE ASSY - HLBD22 02-02SP-02SP-W - (LH CYL. ROD GREASE LINE)	1
2	53262 - (KIT)	HOSE ASSY - HLBD22 02-02SP-02SP-W - (RH CYL. ROD GREASE LINE)	1
3	47308	BRACKET, GREASE LINE - LEVELING	1
4	15576	BOLT - .25" X 1" **263 RED LOCTITE™**	2
5	10800	WASHER, FLAT - .25"	2
6	22281	ELBOW, 1/8-27 NPTF(M), 1/8-17 NPTF(F),90	4
7	15658	CONNECTOR, STR BULKHEAD - 2239-2-4S	14
8	17023	ELBOW, 90 SWIVEL - 6500-4	2
9	53262 - (KIT)	HOSE ASSY - HLBD112 02-04JS-04JS-W - (LH CYL. BULKHEAD TO BULKHEAD GREASE LINE)	1
10	53262 - (KIT)	HOSE ASSY - HLBD112 02-04JS-04JS-W - (RH CYL. BULKHEAD TO BULKHEAD GREASE LINE)	1
11	53262 - (KIT)	HOSE ASSY - HLBD74 02-02PS-04JS-W-125 - (BULKHEAD TO LEVELER - RH REAR INNER)	1
12	53262 - (KIT)	HOSE ASSY - HLBD75 02-02PS-04JS - (BULKHEAD TO LEVELER - RH REAR OUTER)	1
13	53262 - (KIT)	HOSE ASSY - HLBD132 02-02SP-04JS-W - (BULKHEAD TO LEVELER - TOP REAR)	1
14	53262 - (KIT)	HOSE ASSY - HLBD136 02-02SP-04JS - (BULKHEAD TO LEVELER - TOP FRONT)	1
15	10704	FITTING, GREASE - .125 NPT - STR **263 RED LOCTITE™**	12
16	17536	CLAMP, HOSE - COATED STRAP - .75"	3
17	15604	BOLT - .25" X .75" **263 RED LOCTITE™**	3
18	10757	WASHER, SAE FLAT - .25"	3
19	21671	ELBOW, 45 - 5546134	4
20	53262 - (KIT)	HOSE ASSY - HLBD89 02-02PS-04JS - (BULKHEAD TO LEVELER - RH FRONT)	1
21	53262 - (KIT)	HOSE ASSY - HLBD131 02-02PS-04JS-W - (BULKHEAD TO FRONT LH SLACK ADJUSTER)	1
22	53262 - (KIT)	HOSE ASSY - HLBD82 02-02PS-04JS - (BULKHEAD TO LH SIDE SLACK ADJUSTER FRONT)	1
23	53262 - (KIT)	HOSE ASSY - HLBD75 02-02PS-04JS-W125 - (BULKHEAD TO LH SIDE SLACK ADJUSTER REAR)	1
24	53262 - (KIT)	HOSE ASSY - HLBD79 02-02PS-04JS - (BULKHEAD TO LEVELER - LH REAR)	1
25	53262 - (KIT)	HOSE ASSY - HLBD134 02-02PS-04JS - (BULKHEAD TO FRONT RH SLACK ADJUSTER)	1

H100-00440 - NON-LEVELING LEVELING CARBODY HYD. FITTINGS (RM. TO BULKHEAD TO TRACK MOTORS)

NOTE: HYDRAULIC FITTINGS GET 545 LOCTITE™

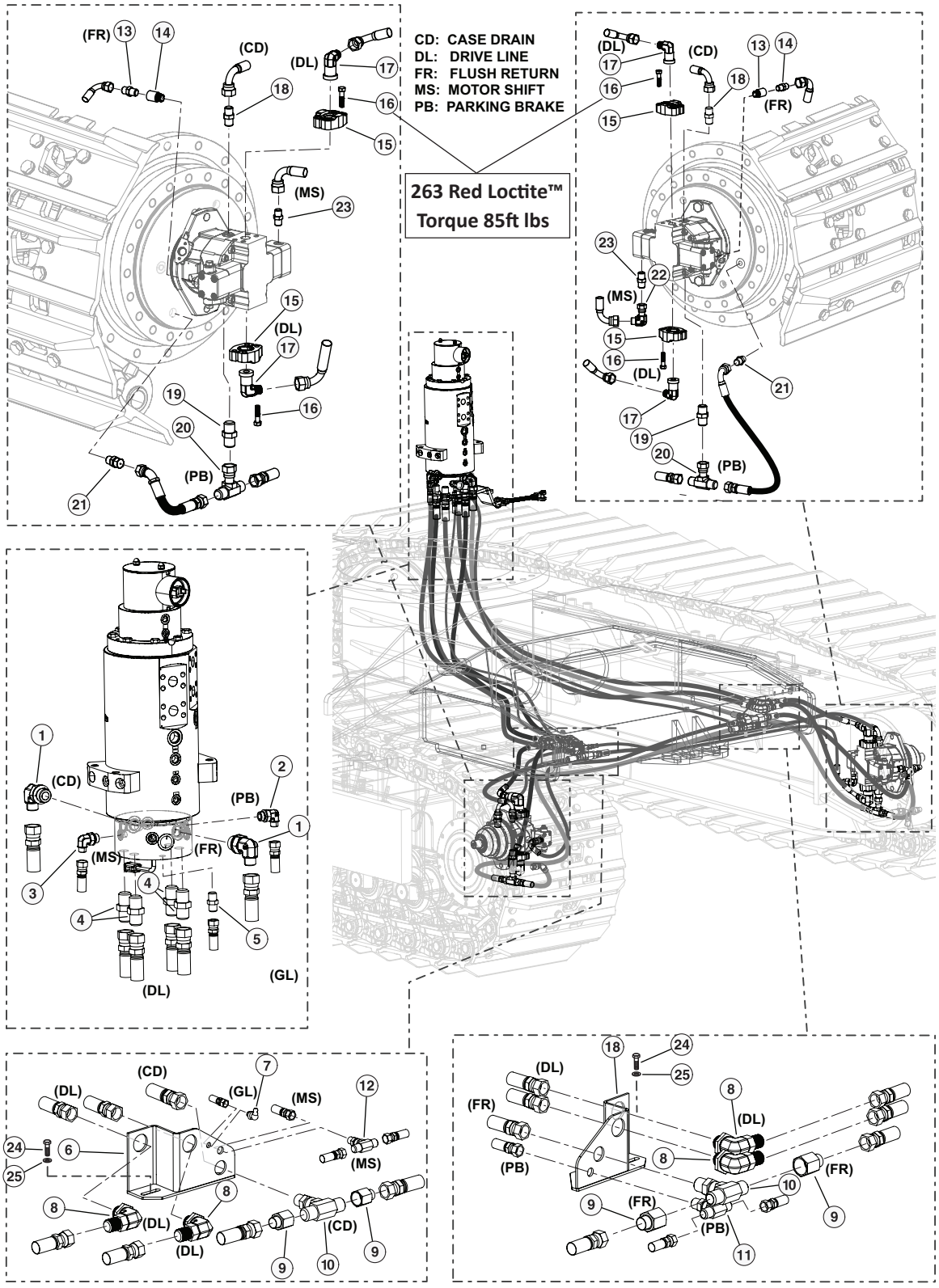

H-00044D 04/24

H100-00440 - NON-LEVELING LEVELING CARBODY HYD. FITTINGS (RM. TO BULKHEAD TO TRACK MOTORS)

Item	Part #	Description	Qty.
	57458	**KIT, FITTING - TRACK TRUNK**	1
	57968	**KIT, FITTING - ROTARY MANIFOLD TRACK NL**	1
	57456	**KIT, FITTING - TRACK NL CARBODY**	1
1	17688	ELBOW, 90 - FF1868T-1212S	2
2	15133	ELBOW, 90 - FF1868T-0406S	1
3	16296	ELBOW, 90 - FF1868T-0606S	1
4	15225	CONNECTOR, STR - FF1852T-1616S	4
5	51887	CONNECTOR, STR - (4F50X-S)	1
6	53762	BULKHEAD, TRACK HOSE L.H.	1
7	15684	FITTING, GREASE - .125 NPT - 90	1
8	53680	FITTING, BULKHEAD UNION ELBOW 16 WELO-WN	4
9	18581	CONNECTOR, REDUCER - ORS FF2281T-0812S	4
10	53192	FITTING, BULKHEAD BRANCH TEE- 12 WJLO-WL	2
11	52902	TEE, BULKHEAD BRANCH - 6	1
12	52901	TEE, BULKHEAD BRANCH - 4	1
13	15117	CONNECTOR, STR - FF1852T-0808S	2
14	53651	FITTING, FLUSHING ORIFICE - TRACK MOTOR	2
15	58359	CONNECTOR,FLANGE PAD-W48-16-16U-M12 BLK	4
16	1139657	BOLT, M12-1.75 X 45MM L 10MM HEX DRIVE **263 RED LOCTITE™ (TORQUE 85FT LBS)**	16
17	15228	ELBOW, 90 - FF1868T-1616S	4
18	52439	CONNECTOR, MALE ISO 6149	1
19	54795	CONNECTOR, STR ORIFICED .04” TRACK MOTOR	2
20	52900	SWIVEL, NUT BRANCH TEE #6	2
21	53124	FITTING, MALE CONNECTOR ISO 6149	2
22	15145	ELBOW, 90 SWIVEL - FF2098T-0404S	2
23	53157	FITTING, CONNECTOR - #4 ORF - 14MM	2
24	11707	BOLT - .375” X 1”	4
25	15528	WASHER, SAE FLAT - .375”	4

H100-00450 - NON-LEVELING CARBODY HYD. FITTINGS - (FUEL SYSTEM)

NOTE: HYDRAULIC FITTINGS GET 545 LOCTITE™

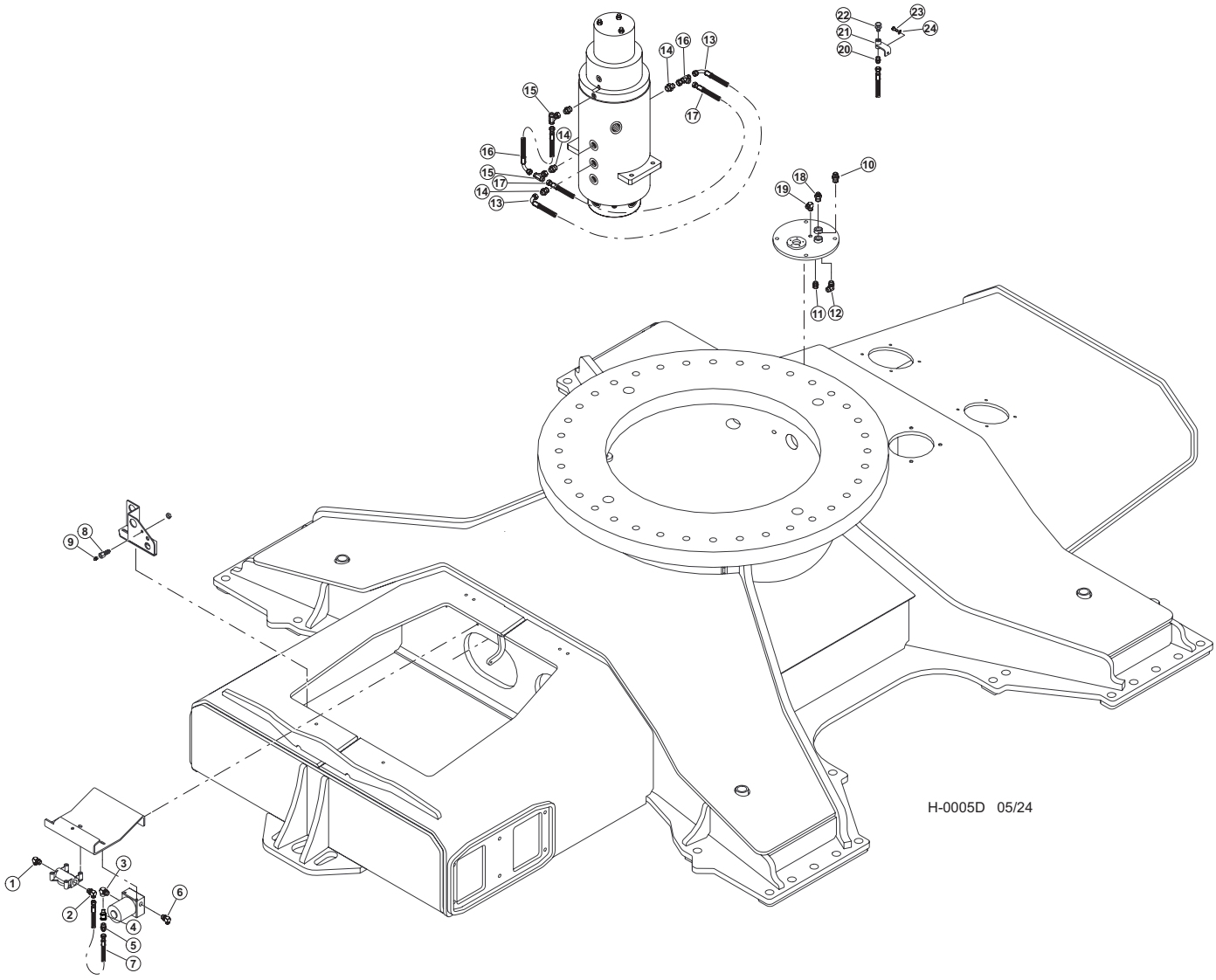

H100-00450 - NON-LEVELING CARBODY HYD. FITTINGS - (FUEL SYSTEM)

Item	Part #	Description	Qty.
	57456	**KIT, FITTING - TRACK NON-LVL**	**1**
	57968	**KIT, FITTING - ROTARY MANIFOLD TRACK NL**	**1**
1	18109	ELBOW, 90 - 6801-8-10	1
2	53073	ELBOW, 90 6-JIC X 10-ORB)	1
3	57824	FITTING, ELBOW FEMALE - RAPTOR FUEL PUMP	1
4	15652	VALVE, CHECK - HYDRAULIC/FUEL	1
5	16009	FITTING, 6 FTX-S PIPE-JIC	1
6	15480	ELBOW, 90 - 6801-6	1
7	58064	HOSE, FUEL RAPTOR PUMP TRACK	1
8	15658	CONNECTOR, STR BULKHEAD - 2239-2-4S	1
9	10704	FITTING, GREASE - .125 NPT - STR	1
10	15489	CONNECTOR, STR - 6400-8-8	1
11	15117	CONNECTOR, STR - FF1852T-0808S	1
12	16360	ELBOW, 90 - FF1868T-0808S	1
13	55559 - (KIT)	HOSE ASSY - 2022-04-04JS-04J9 - (EVO JUMPER)	1
14	55700	FITTING, STRAIGHT - 4-8 F5OX-S	2
15	55676	FITTING, 4 S6X-S	2
16	55559 - (KIT)	HOSE ASSY - 2008.5-04-04JS-04J9 - (EVO JUMPER)	1
17	55559 - (KIT)	HOSE ASSY - 2024-04-04JS-04J9 - (EVO JUMPER)	1
18	53103	FITTING, 6-8 - ORB-JIC	1
19	15505	ELBOW, 90 4-4 CLO-S	1
20	15131	CONNECTOR, STR - FF2031T-0404S	1
21	46415	BRACKET, FUEL VENT NON-LEVEL MACH	1
22	54170	VENT, FUEL TANK - TRACK	1
23	15604	BOLT - .25” X .75”	1
24	10757	WASHER, SAE FLAT - .25”	1

H100-00460 - HYDRAULIC FITTING KIT - (TRACK-NL)

NOTE: HYDRAULIC FITTINGS GET 545 LOCTITE™

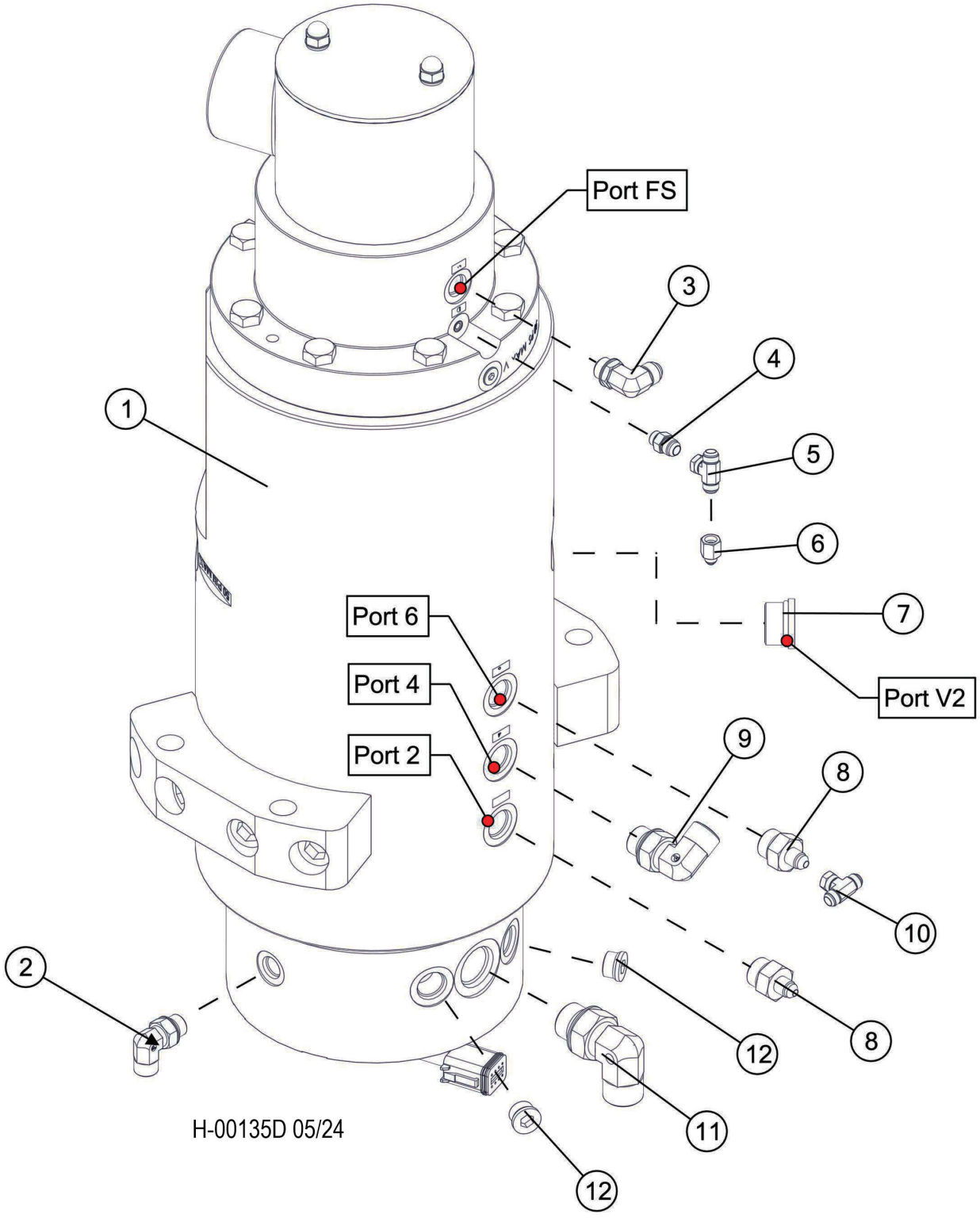

H100-00460 - HYDRAULIC FITTING KIT - (TRACK-NL)

Item	Part #	Description	Qty.
1	650670	MANIFOLD, ROTARY - 14 PORT TRACK (HYDRO	1
2	15133	ELBOW, 90 - FF1868T-0406S	1
3	15480	ELBOW, 90 - 6801-6	1
4	15487	CONNECTOR, STR - 6400-6-4	1
5	55372	FITTING, 4 R6X-S SWIVEL NUT RUN TEE	1
6	55619	REDUCER, TUBE END W/LG NUT - 6-4 TRTXN-S	1
7	15584	PLUG - 6408-HHP-12	1
8	55700	FITTING, STRAIGHT - 4-8 F5OX-S	2
9	16360	ELBOW, 90 - FF1868T-0808S	1
10	55676	FITTING, 4 S6X-S	1
11	17688	ELBOW, 90 - FF1868T-1212S	1
12	18949	PLUG - 6408-HHP-8	2

H100-00470 - HYDRAULIC FITTING KIT - (TRACK-NL)

NOTE: HYDRAULIC FITTINGS GET 545 LOCTITE™

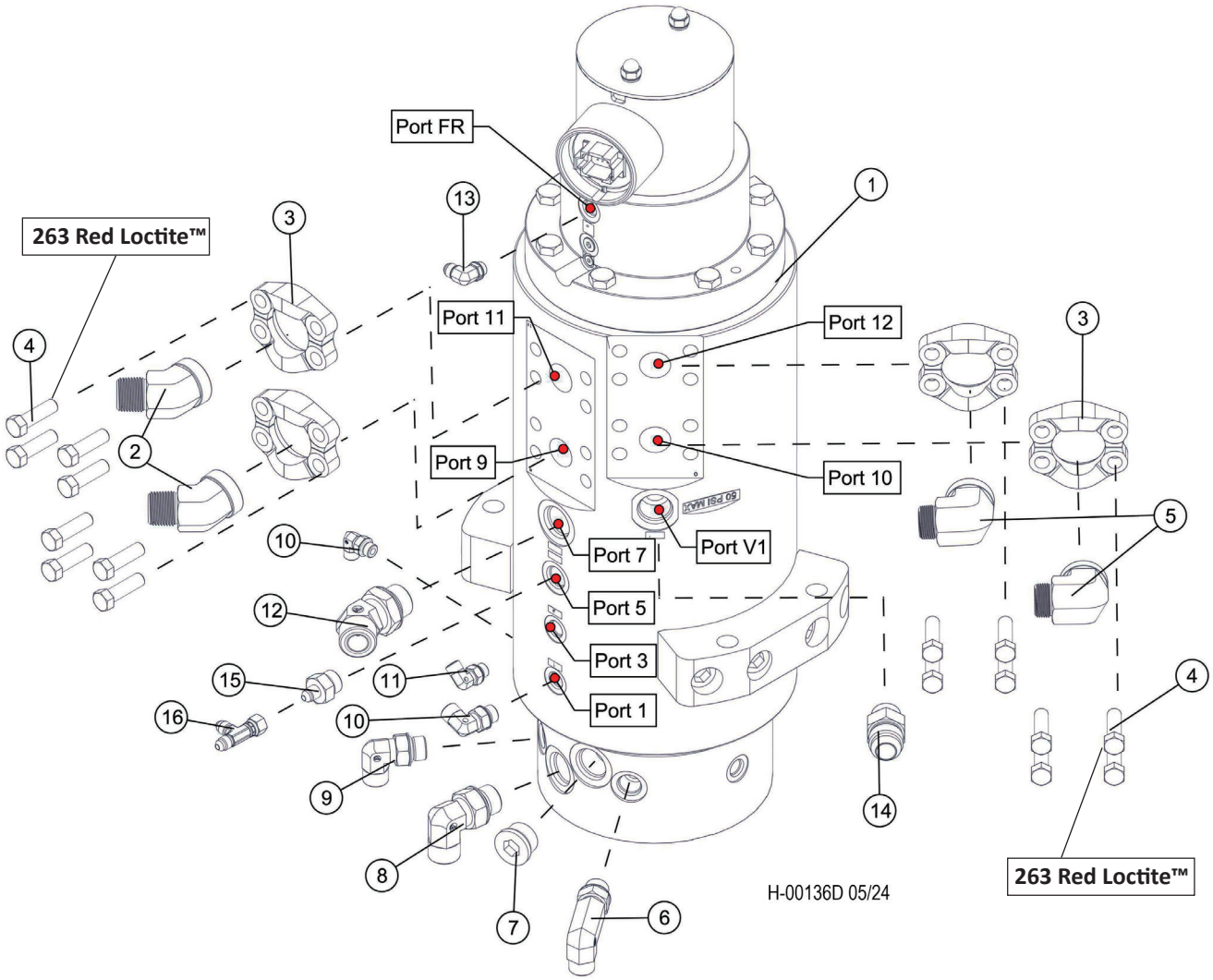

H100-00470 - HYDRAULIC FITTING KIT - (TRACK-NL)

Item	Part #	Description	Qty.
1	650670	MANIFOLD, ROTARY - 14 PORT TRACK (HYDRO	1
2	57459	ADAPTOR, FLANGE 45DEG ORFS CODE 62	2
3	15113	KIT, SPLIT FLANGE - 1” (CODE 62)	4
4	15551	BOLT - 12MM-1.75P X 40MM **263 RED LOCTITE™**	16
5	20030	ADAPTER, 90 FLANGE - 16 LOEQ2-S (C62)	2
6	57445	FITTING, 8 CC5OLO-S	1
7	15584	PLUG - 6408-HHP-12	1
8	17688	ELBOW, 90 - FF1868T-1212S	1
9	52454	ELBOW, 90 4 -8	1
10	16296	ELBOW, 90 - FF1868T-0606S	2
11	15133	ELBOW, 90 - FF1868T-0406S	1
12	19127	ELBOW, 45 - FF2068T-1212S	1
13	15480	ELBOW, 90 - 6801-6	1
14	15496	CONNECTOR, STR - 6400-16-12	1
15	55700	FITTING, STRAIGHT - 4-8 F5OX-S	1
16	55677	FITTING, 4 R6X-S SWIVEL NUT RUN TEE	

H100-00480 - HYDRAULIC FITTING KIT - (TRACK-NL)

NOTE: HYDRAULIC FITTINGS GET 545 LOCTITE™

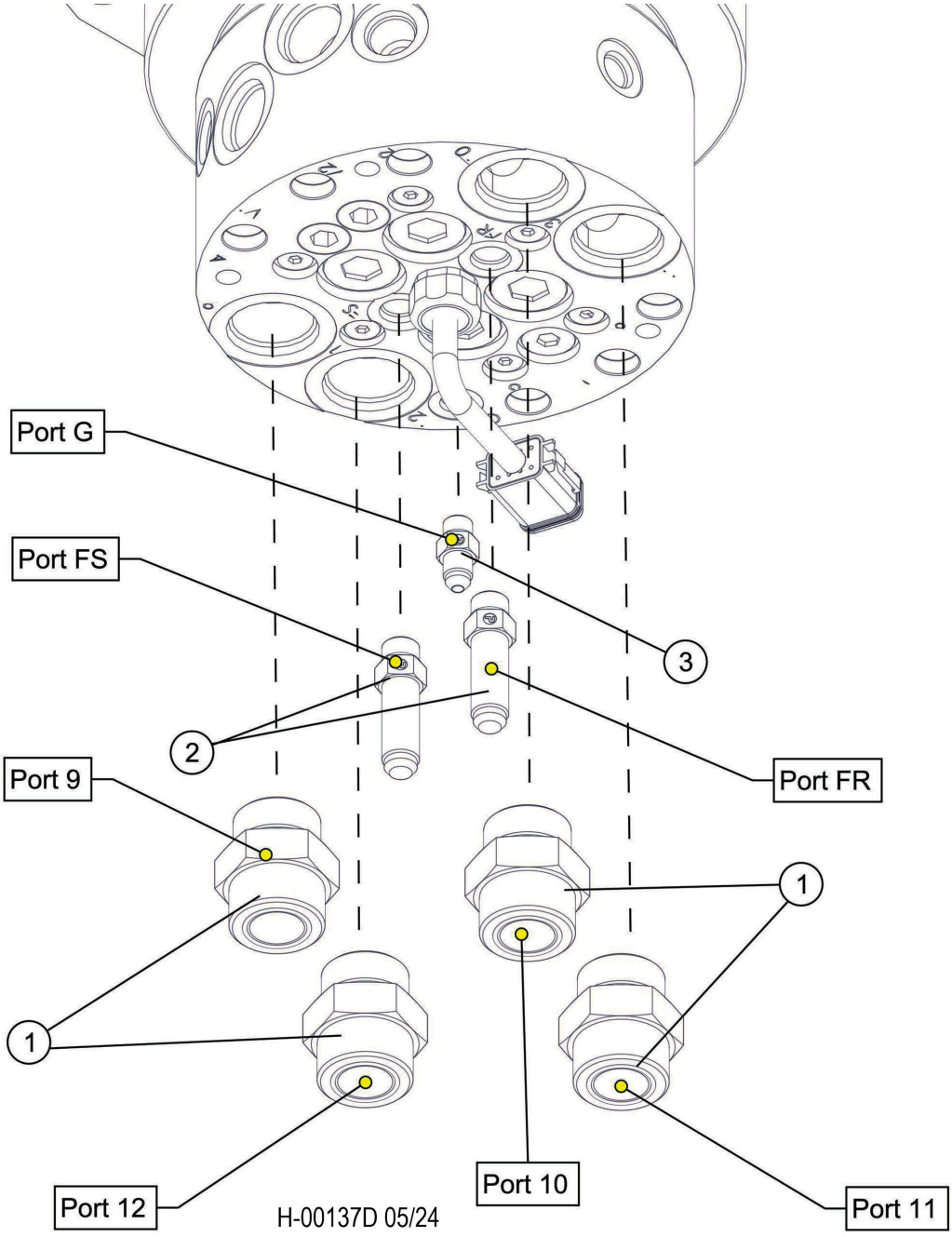

Item	Part #	Description	Qty.
1	15225	CONNECTOR, STR - FF1852T-1616S	4
2	53887	FITTING, FUEL - ROTARY MANIFOLD #6 JIC	2
3	51887	CONNECTOR, STR - (4F50X-S)	1

H100-00481 - ROTARY MANIFOLD COMPONENTS

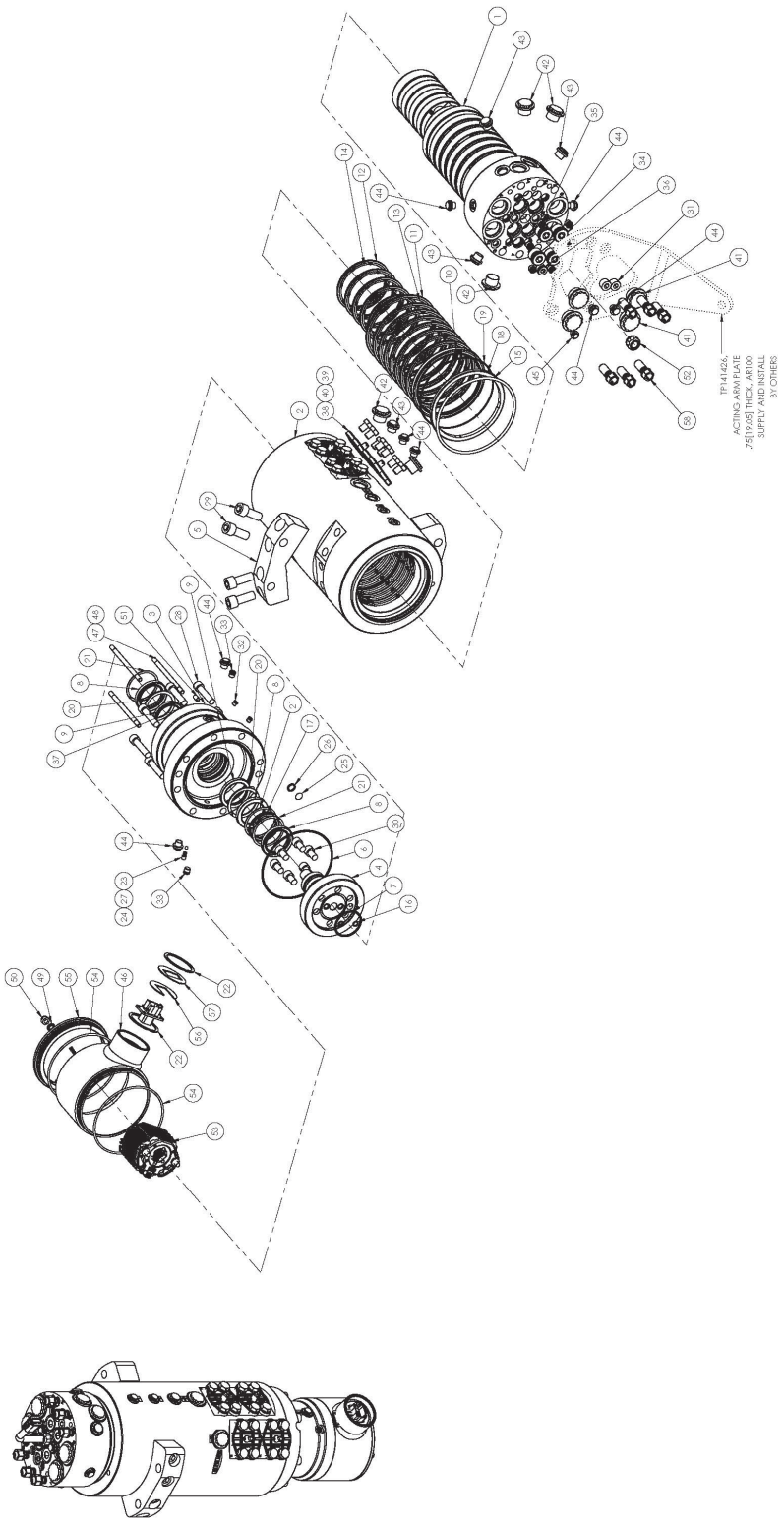

H100-00481 - ROTARY MANIFOLD COMPONENTS

Item	Part #	Description	Qty.
	650670	MANIFOLD, ROTARY - 14 PORT TRACK	1
1	TP1414021	SPOOL, ROTARY	1
2	TP1414002	BARREL, ROTARY	1
3	HD141425	CAP, FUSE SECTION, OPEN, HD SLIP RING OPTION	1
4	HD1414006	RETAINER, SPOOL WITH FUEL	1
5	HD1214003	MOUNTING PLATE	2
6	N1470 - 258	ORING 6.000” x 6.250” x 0.125” c/s	1
7	N1470 - 227	ORING 2.125” x 2.375” x 0.125” c/s	1
8	HD050068080-V	ENVIRO SEAL 50mmX68X8 VITON	3
9	HD050065070-V	ENVIRO SEAL 50mmX65X7 VITON	2
10	HD141610	SEAL, ENVIRONMENTAL SHAFT, 140mm	1
11	N1173-70-359	ORING, HNBR 70, 5.750” x 6.125” x .188” c/s	8
12	N1173-70-346	ORING, HNBR 70, 4.125”x 4.500” x .188” c/s	5
13	RN 140-250-08GL	LOCSEAL, 140 MM	8
14	RN 100-250-08GL	LOCSEAL, 100 MM	5
15	U90 - 363	ORING URETHANE	1
16	V1476 - 012	ORING 1/2”X 3/8”X 1/16”, VITON	2
17	HD141415	RING, ENVIROMENT SEAL SPPRT	1
18	HD140105	LOCKRING FOR 140mm ENVIRO	1
19	MOR1600020/N	ORING 160mm X 164mm X 2mm C/S NBR70	1
20	WHM-256	SPIRAL SNAP RING	2
21	WH-267	SPIRAL SNAP RING	3
22	WHM-250	SPIRAL SNAP RING	2
23	62058	INSERT, ROTARY MANIFOLD	1
24	62059	SPRING, ROTARY MANIFOLD	1
25	TL-C5-190-30	TEMPERATURE LABEL	1
26	N1470 - 112	ORING	1
27	62057	BALL, ROTARY MANIFOLD	1
28	SHCS M12 X 55	SHCS METRIC G12.9	8
29	SHCS M16 X 40	SHCS METRIC G12.9	8
30	SHCS M12 X 20	SHCS METRIC G12.9	6
31	81145	1/2” NPT HEX PLUG FLUSH	2
32	22S - S02	#02 ORB ZLG PLUG SH	3
33	22S - S04	#04 ORB ZLG PLUG SH	2
34	HD002282	#12 ORB CUSTOM PLUG SH	4
35	22S - S05	#05 ORB ZLG PLUG SH	6
36	22S - S08	#08 ORB ZLG PLUG SH	1
37	22S - S06	#06 ORB ZLG PLUG SH	1
38	HDCP-XP-1AI	PLUG	4
39	MOR0360040/N	ORING, 36.0mm X44.0mm X4.0mm	4
40	HHCS M12 X 16MM	HEXBOLT M12X16 G10.9	16
46	E0000176	COVER WELDMENT, SLIPRING	1
47	TR-0.31-05.25	5/16-18 x 5.25” LENGTH	3
48	HD091418	HEAT SHRINK TUBE	3
49	33156	SEAL WASHER 5/16	3
50	70961	ACORN NUT 5/16-18	3
51	SHSS 05-18-0.625	SET SCREW, 5/16-18UNC X 5/8LG	1

Please contact a TimberPro Dealer or Factory before attempting to disassemble or repair rotary manifold. Rotary manifold

H100-00481 - ROTARY MANIFOLD COMPONENTS

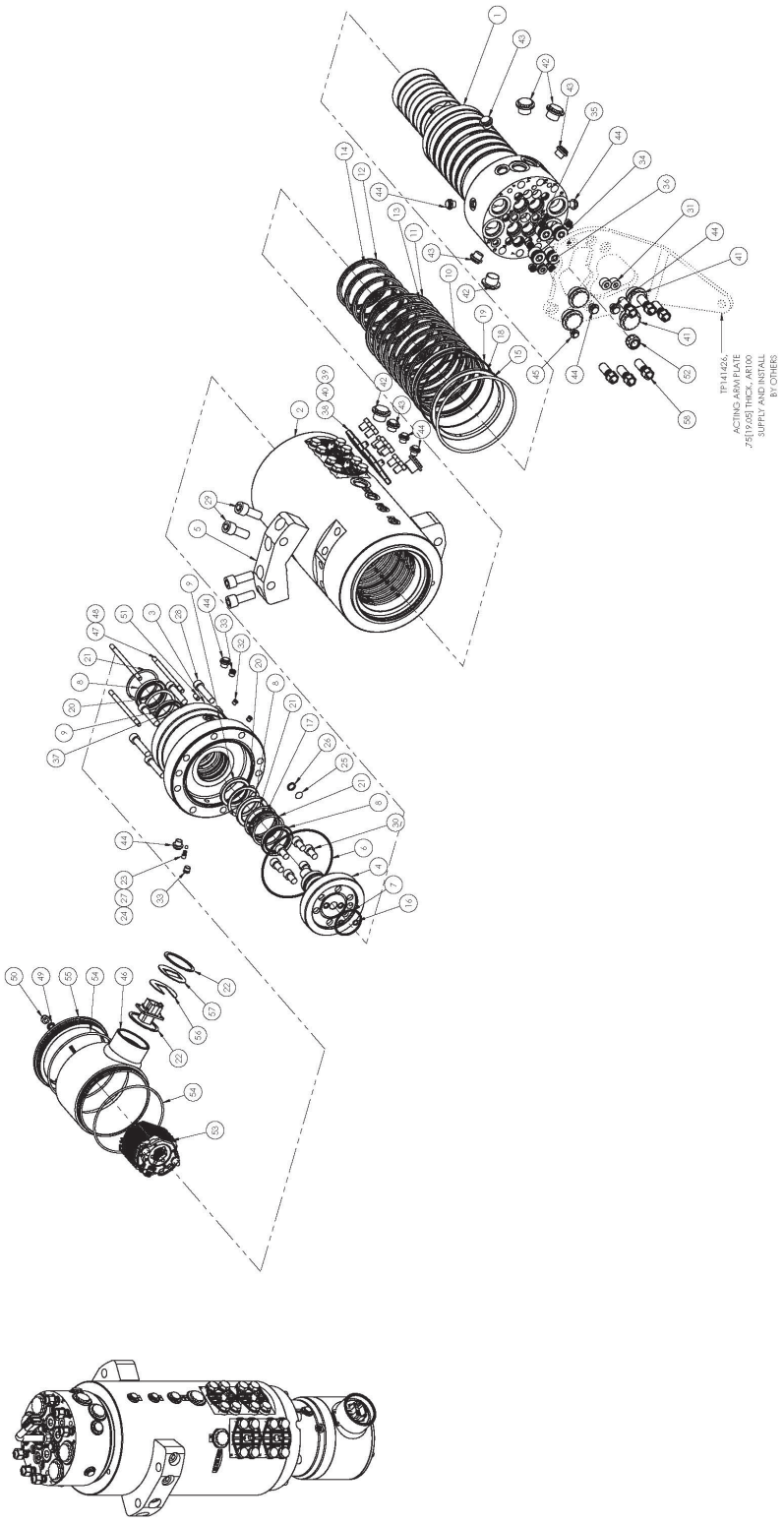

H100-00481 - ROTARY MANIFOLD COMPONENTS

Item	Part #	Description	Qty.
52	HD121437	FITTING, LT 0.500” GRN	1
53	E08080202	ELC SLIP RING, 6 POWER, 2 SIGNAL	1
54	N1470 - 257	ORING, 70 DUROMETER 5.875” X 6.125” X 0.125”C/S	2
55	E0000177	CAP, SLIP RING COVER	1
56	HD121419	PLATE, CONNECTOR MOUNT	1
57	HD121420	PLATE, CONNECTOR MOUNT	1
58	689540	BOLT, CONE LUG STYLE W HOLE	6

Please contact a TimberPro Dealer or Factory before attempting to disassemble or repair rotary manifold. Rotary manifold

H200-00100 - HYDRAULIC FITTING KIT - (TRACK)

NOTE: HYDRAULIC FITTINGS GET 545 LOCTITE™

LEFT SIDE

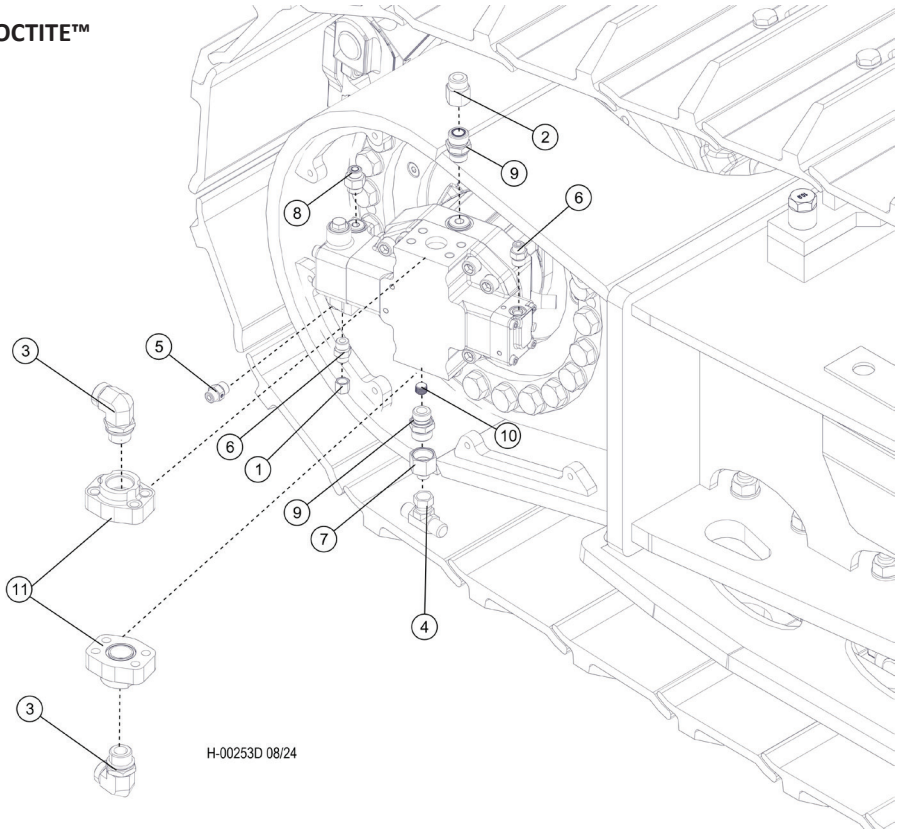

RIGHT SIDE

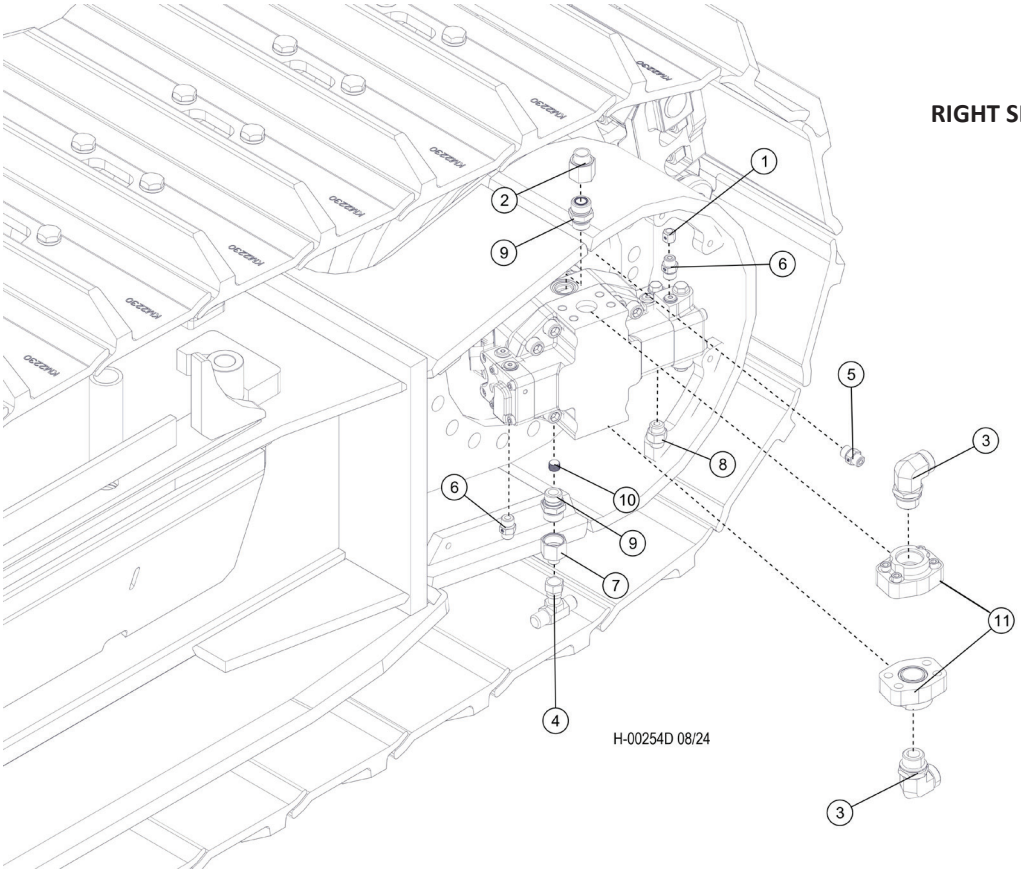

H100-00100 - HYDRAULIC FITTING KIT - (TRACK)

Item	Part #	Description	Qty.
1	15435	CAP - FF9863-04S	2
2	18581	CONNECTOR, REDUCER - ORS FF2281T-0812S	2
3	50470	ELBOW, 90 - 849-TT0-16X20	4
4	52900	SWIVEL, NUT BRANCH TEE #6	2
5	53124	FITTING, MALE CONNECTOR ISO 6149	2
6	53157	FITTING, CONNECTOR - #4 ORF - 14MM	4
7	57484	FITTING, 12-6 TRLON	2
8	57504	FITTING, METRIC 8M22F87OMLOS	2
9	57506	FITTING, METRIC 12M27F82EDMLOS	4
10	58587	PLUG, 3/8 PIPE HEX HEAD BRASS	2
11	58360	CONNECTOR,FLANGE PAD-W48-20-20U-M14 BLK	4

H100-00490 - MAIN BOOM PIPING - DISC SAW

NOTE: HYDRAULIC FITTINGS GET 545 LOCTITE™

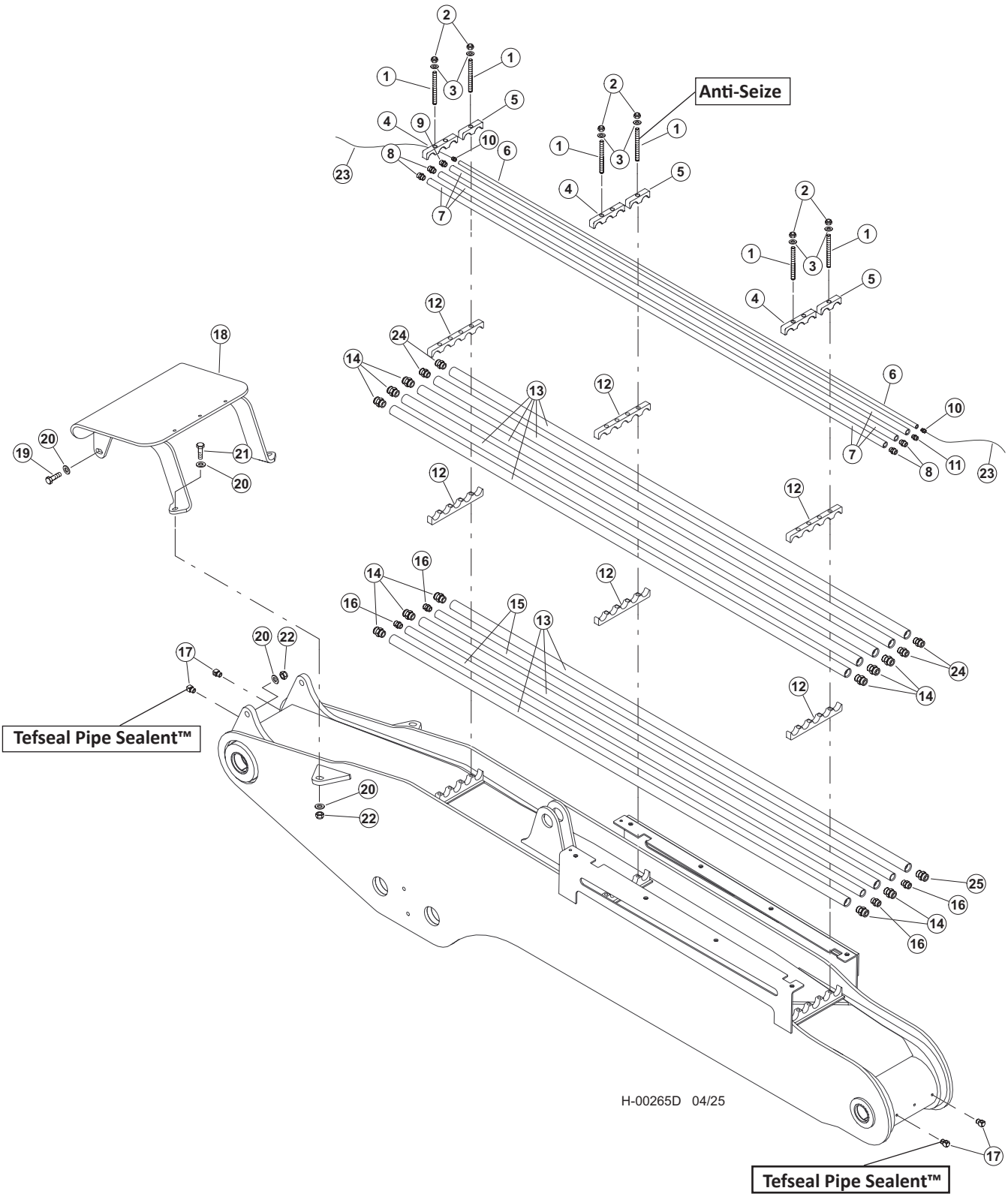

H100-00490 - MAIN BOOM PIPING - DISC SAW

Item	Part #	Description	Qty.
1	17062	STUD - .625” X 8” **ANTI-SEIZE™**	9
2	15563	NUT, NYLOCK - .625”	9
3	10771	WASHER, SAE FLAT - .625	9
4	85086	CLAMP, SADDLE TOP TUBE - 1”/1”/1”	3
5	54181	CLAMP, SADDLE TOP TUBE - 3/8”P (1 TUBE)	3
6	53116	TUBELINE - .3/8” X 108” - BLACK PIPE	1
7	51815	TUBELINE - .5” X 108”	3
8	51880 (KIT - 57398)	CONNECTOR, STR - (10-8 F50L0-S)	4
9	15117 (KIT - 57398)	CONNECTOR, STR - FF1852T-1208S	1
10	51878 (KIT - 57398)	CONNECTOR, STR - MALE PIPE (6-6 FLO-S)	2
11	16913 (KIT - 57398)	CONNECTOR, STR - FF1852T-0808S	1
12	52155	CLAMP, SADDLE - DRILLED (5-1” TUBES)	6
13	51833	TUBELINE - 1” X 108” FB MAIN	8
14	15225 (KIT - 57398)	CONNECTOR, STR - FF1852T-1616S	11
15	51834	TUBELINE - .75” X 108” FB MAIN	2
16	15152 (KIT - 57398)	CONNECTOR, STR - FF1852T-1212S	4
17	22281	ELBOW, 1/8-27 NPTF(M), 1/8-17 NPTF(F),90 **TEFSEAL PIPE SEALANT™**	4
18	53927	GUARD, HOSE - MAIN BOOM (FB)(53919 BOOM)	1
19	10840	BOLT - .75” X 3”	2
20	10806	WASHER, 3/4” USS TRU-TORQ	8
21	58398	BOLT - .75” X 2.75”	2
22	10817	NUT, 3/4-10 UNC	4
23	58380	CABLE	30’
24	52866 (KIT - 57398)	CONNECTOR, STR - 10-16 F50LO-S	4
25	17063 (KIT - 57398)	CONNECTOR, STR - FF1852T-2016S	1

H100-00500 - STICK BOOM PIPING - DISC SAW

NOTE: HYDRAULIC FITTINGS GET 545 LOCTITE™

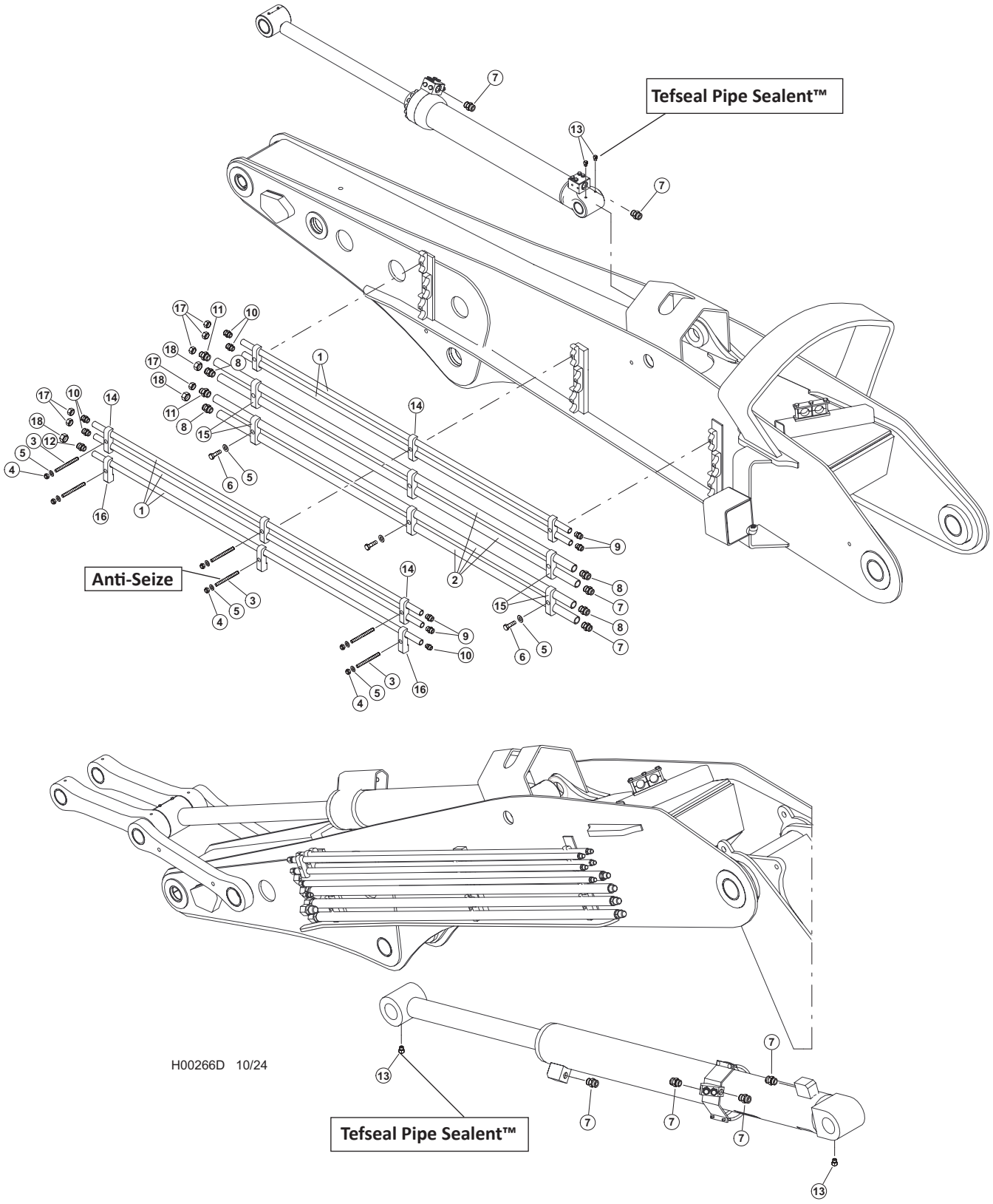

H100-00500 - STICK BOOM PIPING - DISC SAW

Item	Part #	Description	Qty.
1	16513	TUBELINE - .5” X 80”	5
2	16506	TUBELINE - 1” X 84”	4
3	15672	STUD - .625”-11 X 6.25” **ANTI-SEIZE™**	6
4	15563	NUT, NYLOCK - .625”	6
5	10771	WASHER, FLAT - .625”	9
6	15517	BOLT - .625” X 2.5”	3
7	15525 (KIT - 57399)	CONNECTOR, STR - FF1852T-1616S	10
8	15226 (KIT - 57399)	CONNECTOR, STR - FF1852T-1216S	4
9	51880 (KIT - 57399)	CONNECTOR, STR - (10-8 F50L0-S)	4
10	15117 (KIT - 57399)	CONNECTOR, STR - FF1852T-0808S	5
11	57394 (KIT - 57399)	FITTING, 8-16 F5OLO-S	2
12	16913 (KIT - 57399)	CONNECTOR, STR - FF1852T-1208S	1
13	22281	ELBOW, 90 - 5546132 **TEFSEAL PIPE SEALANT™**	4
14	15272	CLAMP, SADDLE TOP TUBE - .5” & .5”	6
15	12447	CLAMP, SADDLE TOP TUBE - 1” & 1”	6
16	23222	CLAMP, SADDLE TOP TUBE - .5” (1 TUBE)	3
17	15434	CAP - FF9863-08S	6
18	15437	CAP - FF9863-12S	3

H-2225200, H-2256700 - DISC SAW PIPING - PRESSURE, CASE DRAIN & - LOAD SENSE (DISC SAW PUMP TO BOOM)

NOTE: HYDRAULIC FITTINGS GET 545 LOCTITE™

NOTE: APPLY GREASE TO O-RINGS

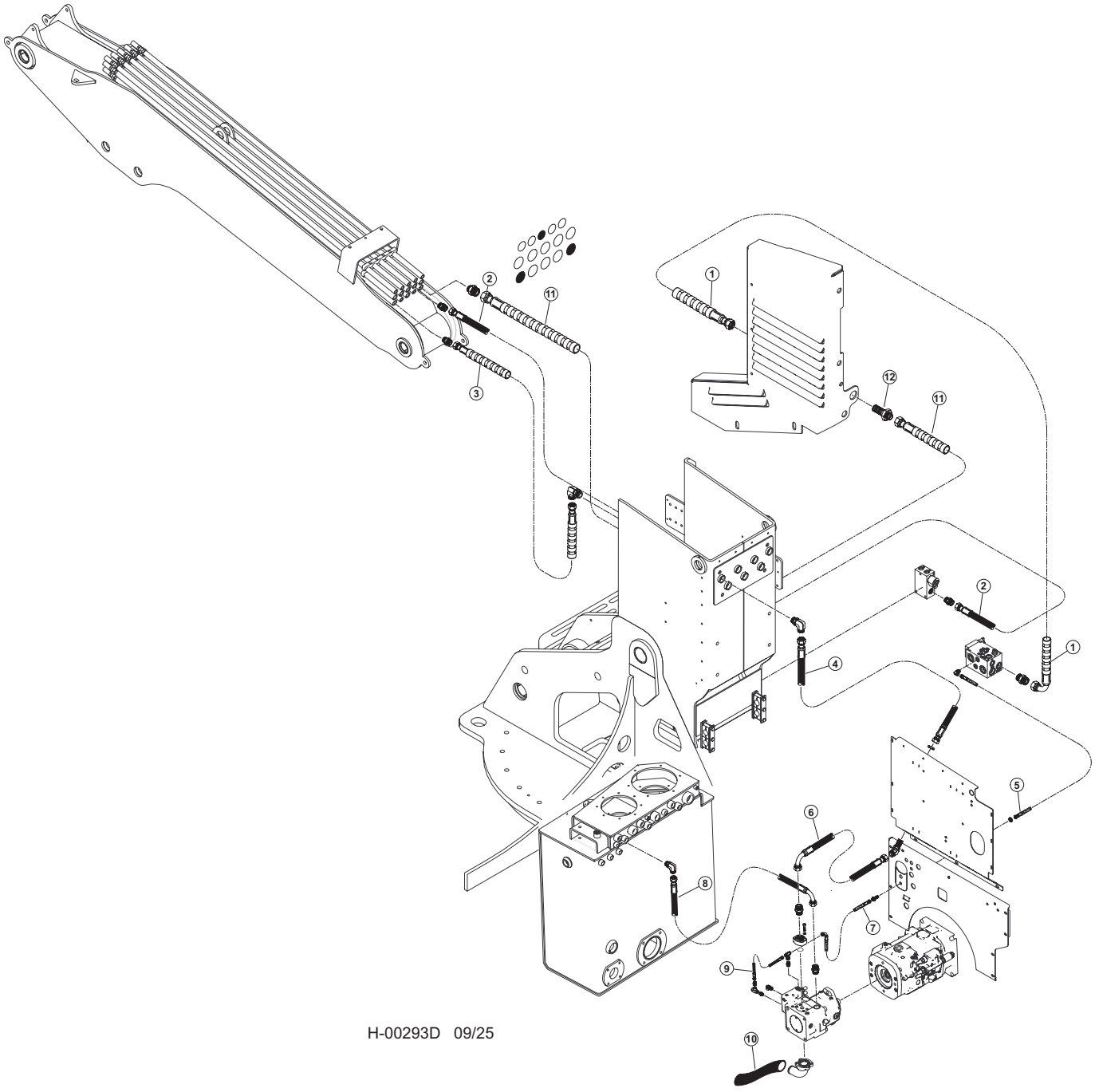

H-00293D 09/25

H-2225200, H-2256700 - DISC SAW PIPING - PRESSURE, CASE DRAIN & - LOAD SENSE (DISC SAW PUMP TO BOOM)

Item	Part #	Description	Qty.
1	689410 - (658781 - KIT)	HOSE, HYD, 187TC44 20-20JS-20J9-SW **- (DISC SAW RETURN)**	1
2	65880 - (65878 - KIT)	HOSE, HYD, 187TC54 12-12OS-12OS-W **- (ATTACHMENT CASE DRAIN)**	1
3	65885 - (65878 - KIT)	HOSE, HYD, 787TC40 16-16OS-16OS-SW **- (DISC SAW PRESSURE)**	1
4	65874 - (65878 - KIT)	HOSE, HYD, 787TC24.5 16-16OS-16OS **- (DISC SAW PRESSURE)**	1
5	65877 - (65878 - KIT)	HOSE, HYD, 787TC39 04-04OS-04OS-W **- (AUXILARY PUMP LS DRAIN)**	1
6	65875 - (65872 - KIT)	HOSE, HYD, 787TC34 16-16OS-16O9 **- (DISC SAW PRESSURE)**	1
7	65876 - (65872 - KIT)	HOSE, HYD, 787TC35 04-04OS-04O9-W **- (AUXILARY PUMP LS DRAIN)**	1
8	65879 - (65878 - KIT)	HOSE, HYD, 187TC27.5 12-12OS-12O9 **- (AUXILARY PUMP CASE DRAIN)**	1
9	65873 - (65872 - KIT)	HOSE, HYD, 787TC11 04-04OS-04O9 **- (AUXILARY PUMP LOAD SENSE)**	1
10	65883 - (65878 - KIT)	HOSE, SUCTION, 7219-200018.532-00-00 **- (AUXILARY PUMP SUCTION INLET)**	1
11	689400 - (658781 - KIT)	HOSE, HYD, 187TC44 20-20JS-20OS-SW **- (DISC SAW RETURN)**	1
12	57491- (57950- KIT)	FITTING, 20 WTX-WLN-S	1

H100-00520 - DISC SAW PIPING - TOOL TILT (K220/L90 VALVE) - MAIN VALVE TO BOOM

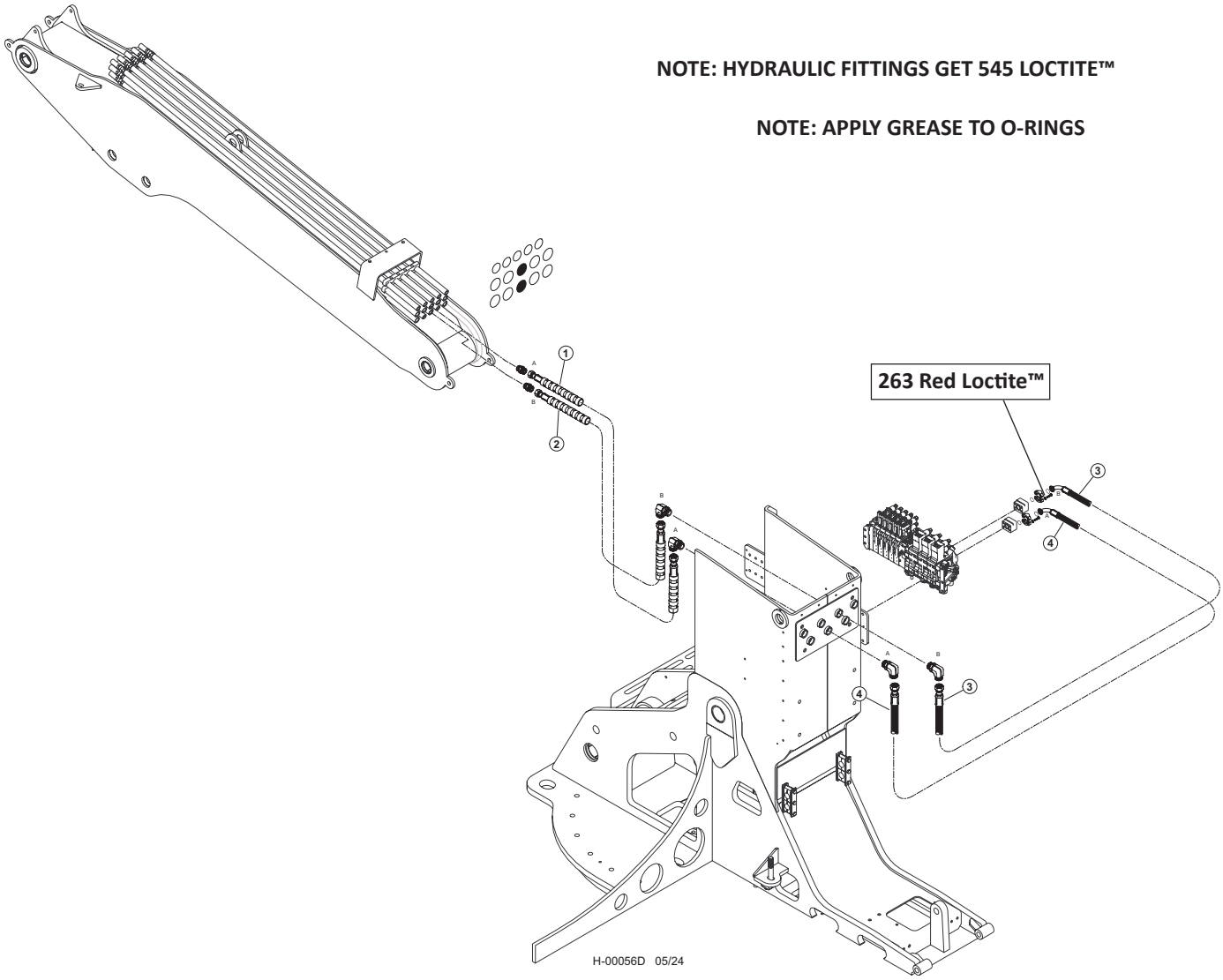

Item	Part #	Description	Qty.
1	57942 - (KIT)	HOSE ASSY - 722TC40 16-16OS-16OS-SW - (TOOL CYLINDER “A”)	1
2	57942 - (KIT)	HOSE ASSY - 722TC40 16-16OS-16OS-SW - (TOOL CYLINDER “B”)	1
3	57942 - (KIT)	HOSE ASSY - 722TC38 16-16OS-16PA9 - (TOOL CYLINDER “B”)	1
4	57942 - (KIT)	HOSE ASSY - 722TC37 16-16OS-16PA9 - (TOOL CYLINDER “A”)	1

H200-00240 - DISC SAW PIPING - TOOL TILT (W450/W300 VALVE)
MAIN VALVE TO BOOM

NOTE: HYDRAULIC FITTINGS GET 545 LOCTITE™

NOTE: APPLY GREASE TO O-RINGS

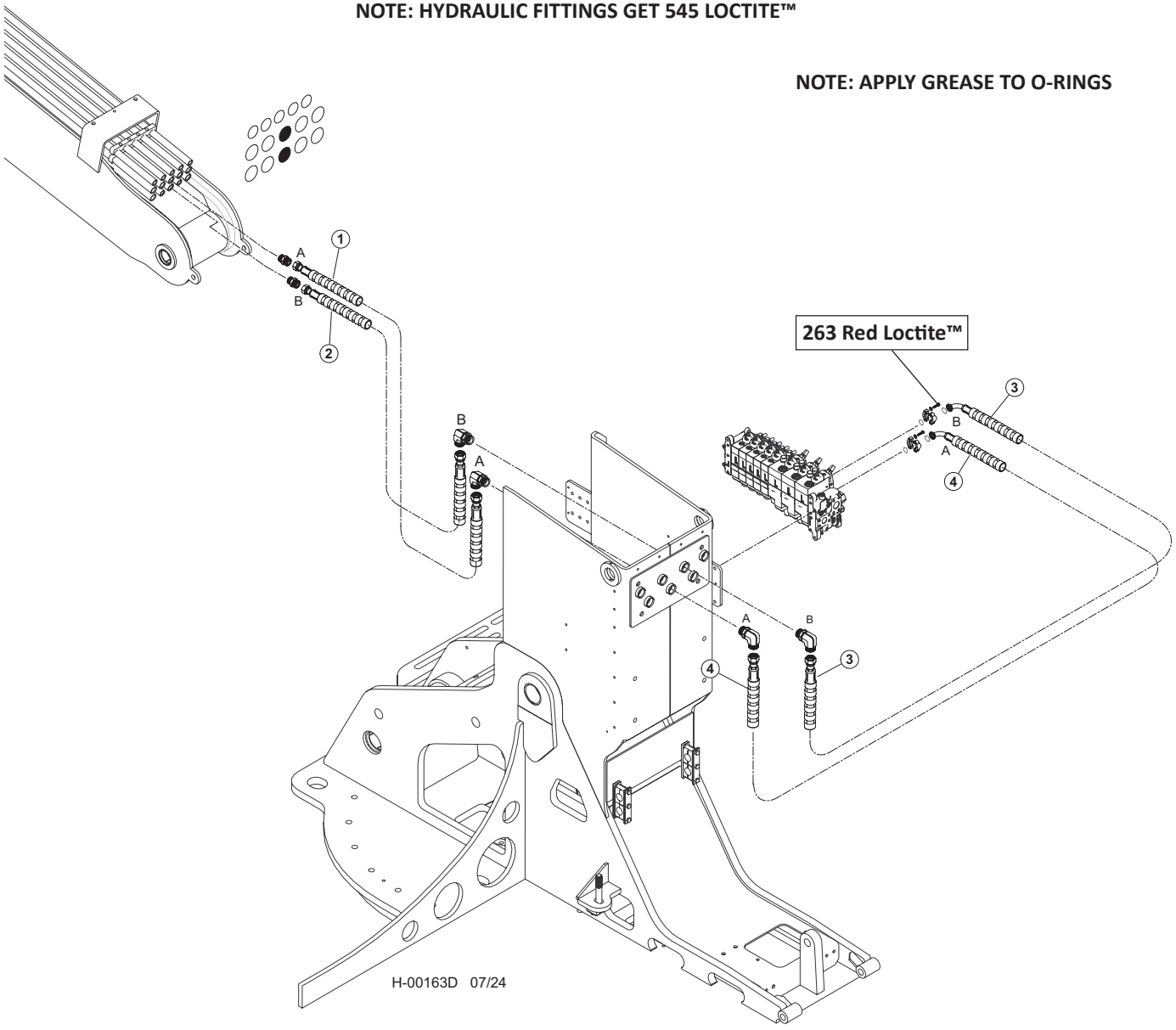

Item	Part #	Description	Qty.
1	65885 - (65896 - KIT)	HOSE, HYD, 787TC40 16-16OS-16OS-SW **("A" PORT - CHIMNEY TO BOOM)**	1
2	65884 - (65896 - KIT)	HOSE, HYD, 787TC39 16-16OS-16OS-SW **("B" PORT - CHIMNEY TO BOOM)**	1
3	65858 - (65856 - KIT)	HOSE, HYD, 787TC36.5 16-16OS-20PH9-SW **("B" PORT - VALVE TO CHIMNEY)**	1
4	65482 - (65856 - KIT)	HOSE, HYD, 787TC36 16-16OS-20PH9-SW **("A" PORT - VALVE TO CHIMNEY)**	1

H100-00530 - DISC SAW PIPING - STICK BOOM CYLINDER (K220/L90 VALVE) (MAIN VALVE TO BOOM)

NOTE: HYDRAULIC FITTINGS GET 545 LOCTITE™

NOTE: APPLY GREASE TO O-RINGS

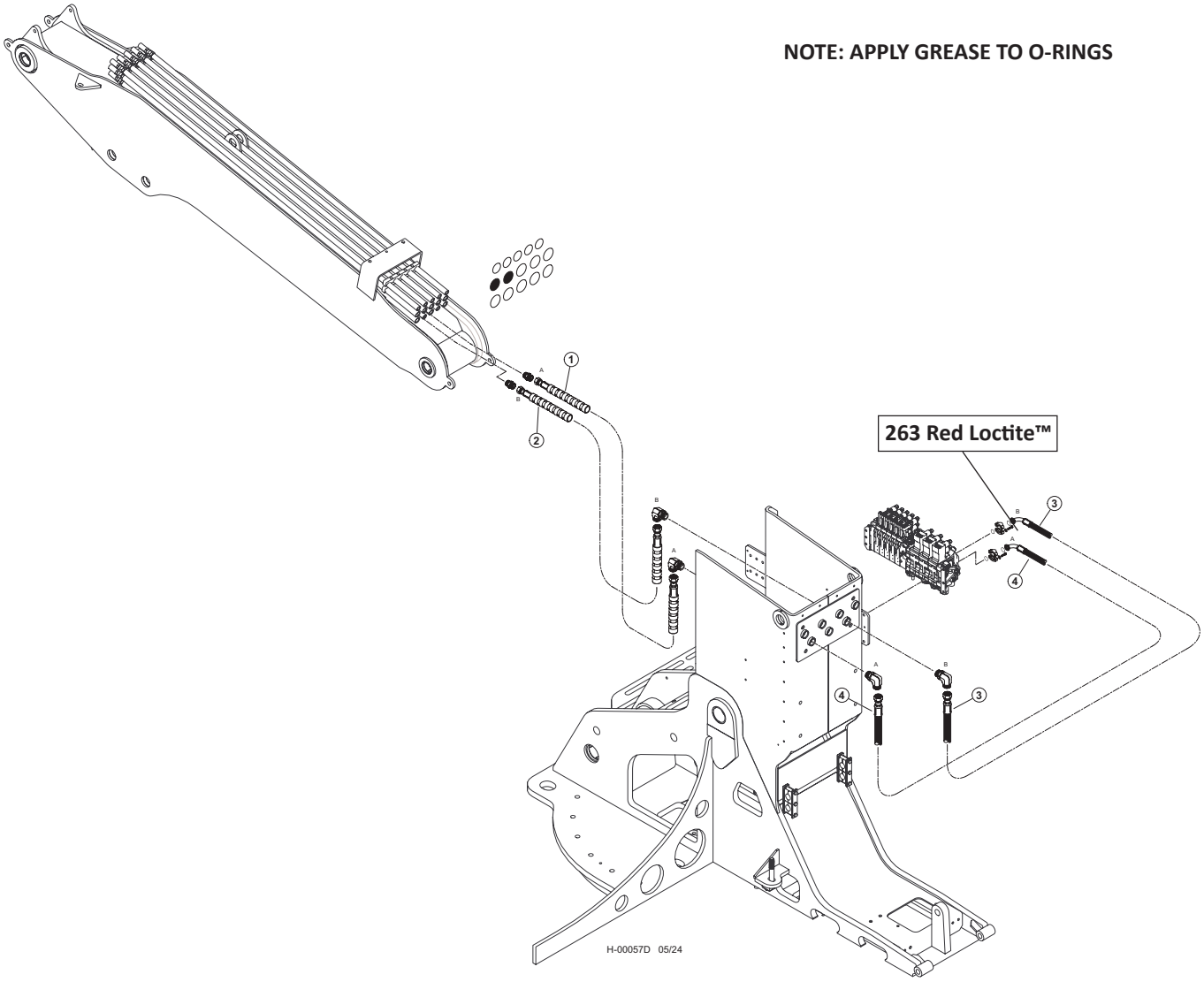

Item	Part #	Description	Qty.
1	57942 - (KIT)	HOSE ASSY - 722TC39 16-16OS-16OS-SW - (STICK CYLINDER “A”)	1
2	57942 - (KIT)	HOSE ASSY - 722TC39 16-16OS-16OS-SW - (STICK CYLINDER “B”)	1
3	57942 - (KIT)	HOSE ASSY - 722TC40 16-16OS-16PA9 - (STICK CYLINDER “B”)	1
4	57942 - (KIT)	HOSE ASSY - 722TC39 16-16OS-16PA9 - (STICK CYLINDER “A”)	1

H200-00250 - DISC SAW PIPING - STICK BOOM (W450/W300 VALVE)
MAIN VALVE TO BOOM

NOTE: HYDRAULIC FITTINGS GET 545 LOCTITE™

NOTE: APPLY GREASE TO O-RINGS

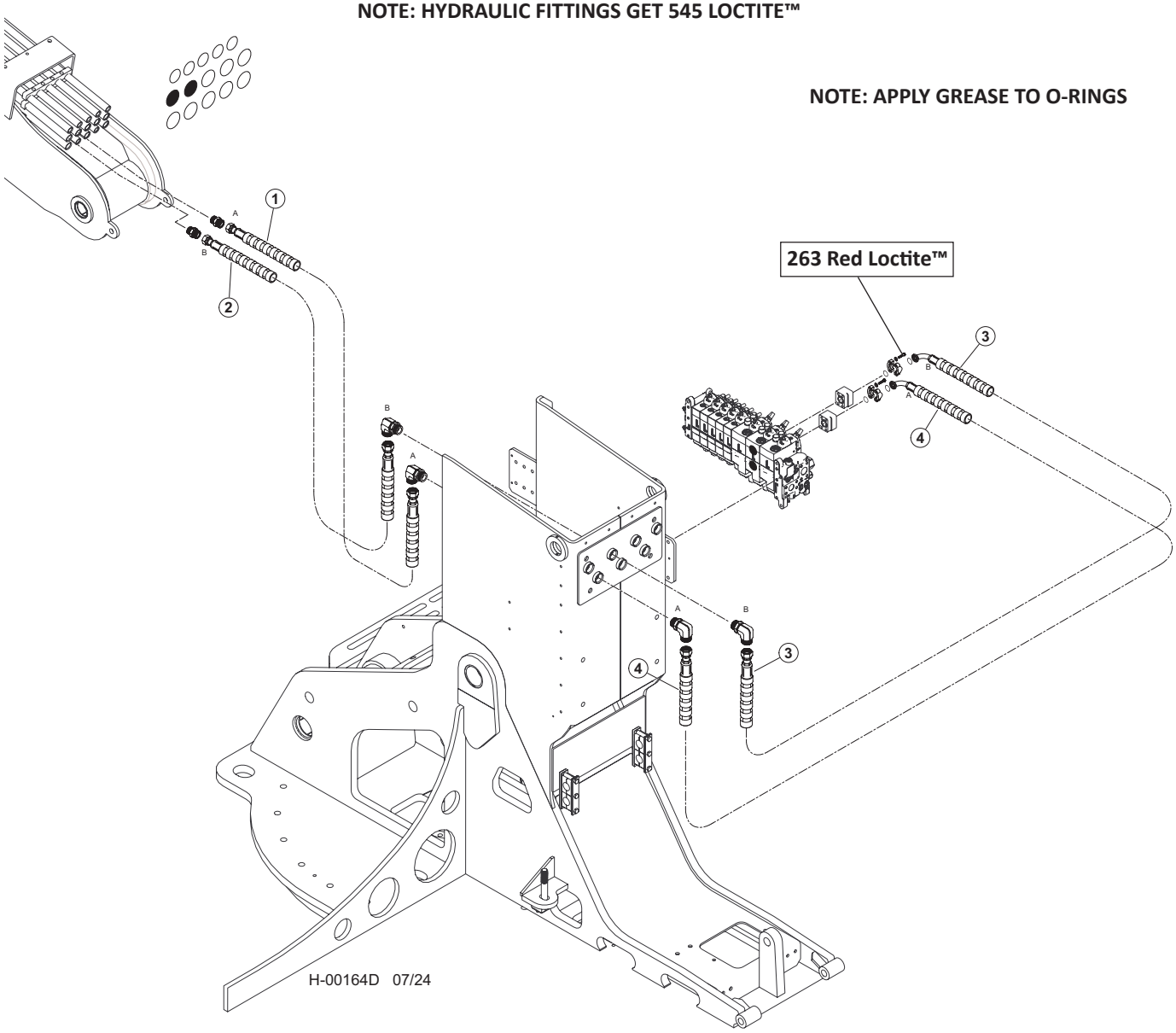

Item	Part #	Description	Qty.
1	65885 - (65896 - KIT)	HOSE, HYD, 787TC40 16-16OS-16OS-SW **("A" PORT - CHIMNEY TO BOOM)**	1
2	65884 - (65896 - KIT)	HOSE, HYD, 787TC39 16-16OS-16OS-SW **("B" PORT - CHIMNEY TO BOOM)**	1
3	65859 - (65856 - KIT)	HOSE, HYD, 787TC36.5 16-16OS-20PH9-SW **("B" PORT - VALVE TO CHIMNEY)**	1
4	65615 - (65856 - KIT)	HOSE, HYD, 787TC36 16-16OS-20PH9-SW **("A" PORT - VALVE TO CHIMNEY)**	

H100-00540 - DISC SAW PIPING - CLAMP (K220/L90 VALVE) - MAIN VALVE TO BOOM

NOTE: HYDRAULIC FITTINGS GET 545 LOCTITE™

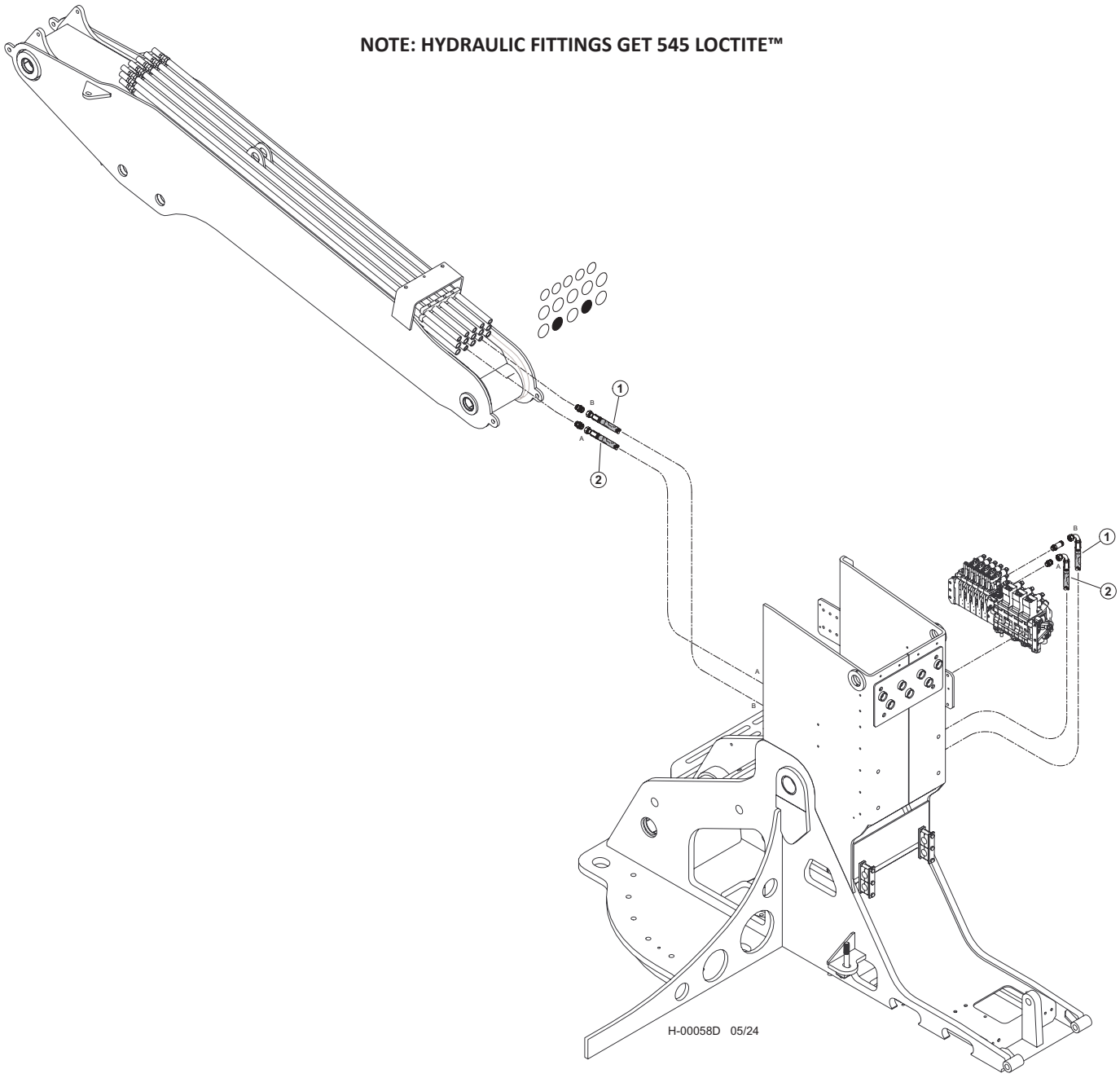

Item	Part #	Description	Qty.
1	57942 - (KIT)	HOSE ASSY - 722TC62 12-12OS-12O9-W - (CLAMP “B”)	1
2	57942 - (KIT)	HOSE ASSY - 722TC64 12-12OS-12O9-W - (CLAMP “A”)	1

H200-00260 - DISC SAW PIPING - CLAMP (W450/W300 VALVE) - MAIN VALVE TO BOOM

NOTE: HYDRAULIC FITTINGS GET 545 LOCTITE™

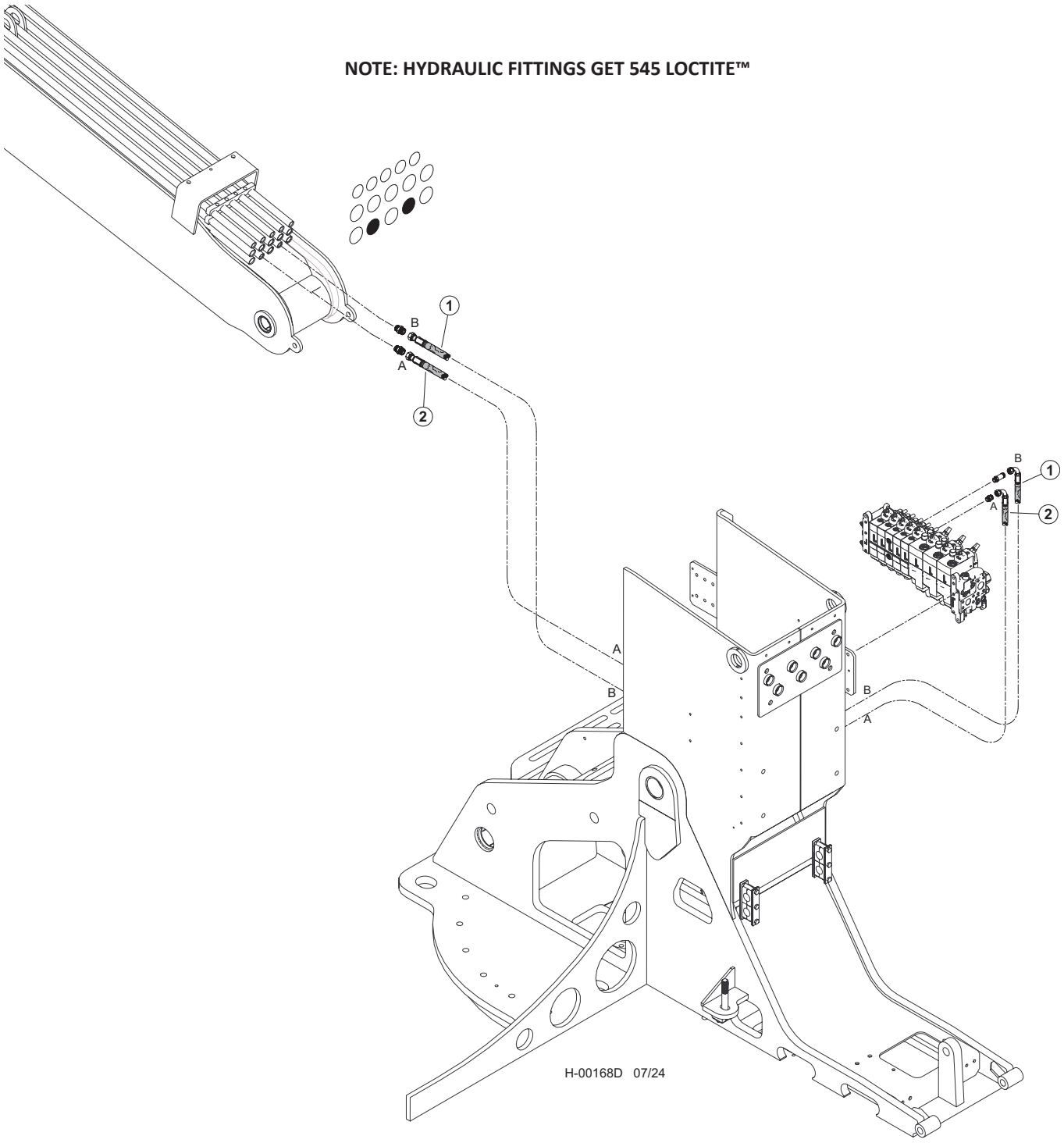

Item	Part #	Description	Qty.
1	65862 - (65856 - KIT)	HOSE, HYD, 722TC70.5 12-12OS-12O4-W **- (CLAMP "B")**	1
2	65862 - (65856 - KIT)	HOSE, HYD, 722TC70.5 12-12OS-12O4-W **- (CLAMP "A")**	1

H100-00550 - DISC SAW PIPING - ACCUMULATOR (K220/L90 VALVE) MAIN VALVE TO BOOM)

NOTE: HYDRAULIC FITTINGS GET 545 LOCTITE™

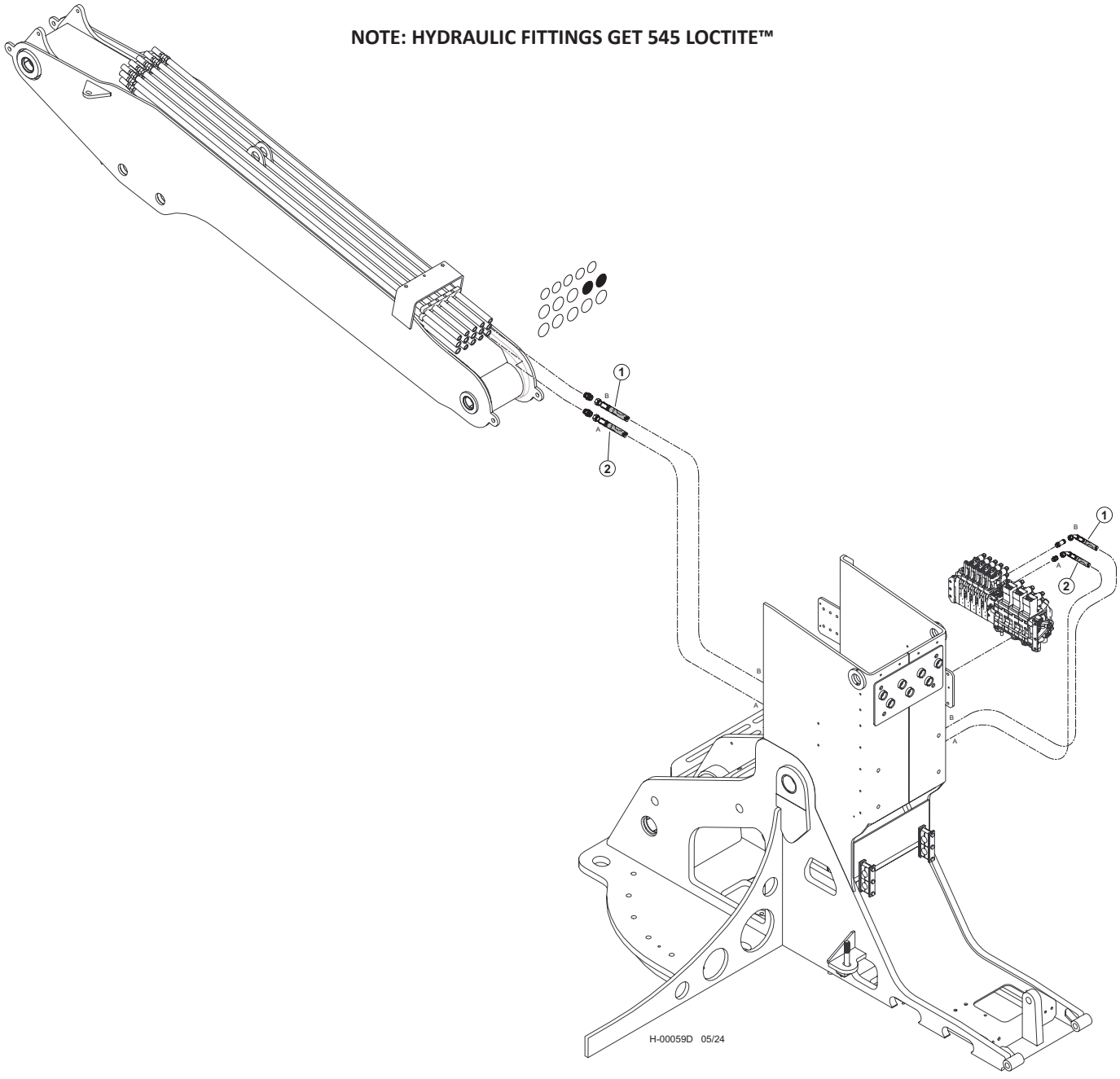

Item	Part #	Description	Qty.
1	57942 - (KIT)	HOSE ASSY - 722TC64 10-10OS-10O4-W - **(ACCUMULATOR "B")**	1
2	57942 - (KIT)	HOSE ASSY - 722TC63 10-10OS-10O4-W - **(ACCUMULATOR "A")**	1

H200-00270 - DISC SAW PIPING - ACCUMULATOR (W450/W300 VALVE) MAIN VALVE TO BOOM)

NOTE: HYDRAULIC FITTINGS GET 545 LOCTITE™

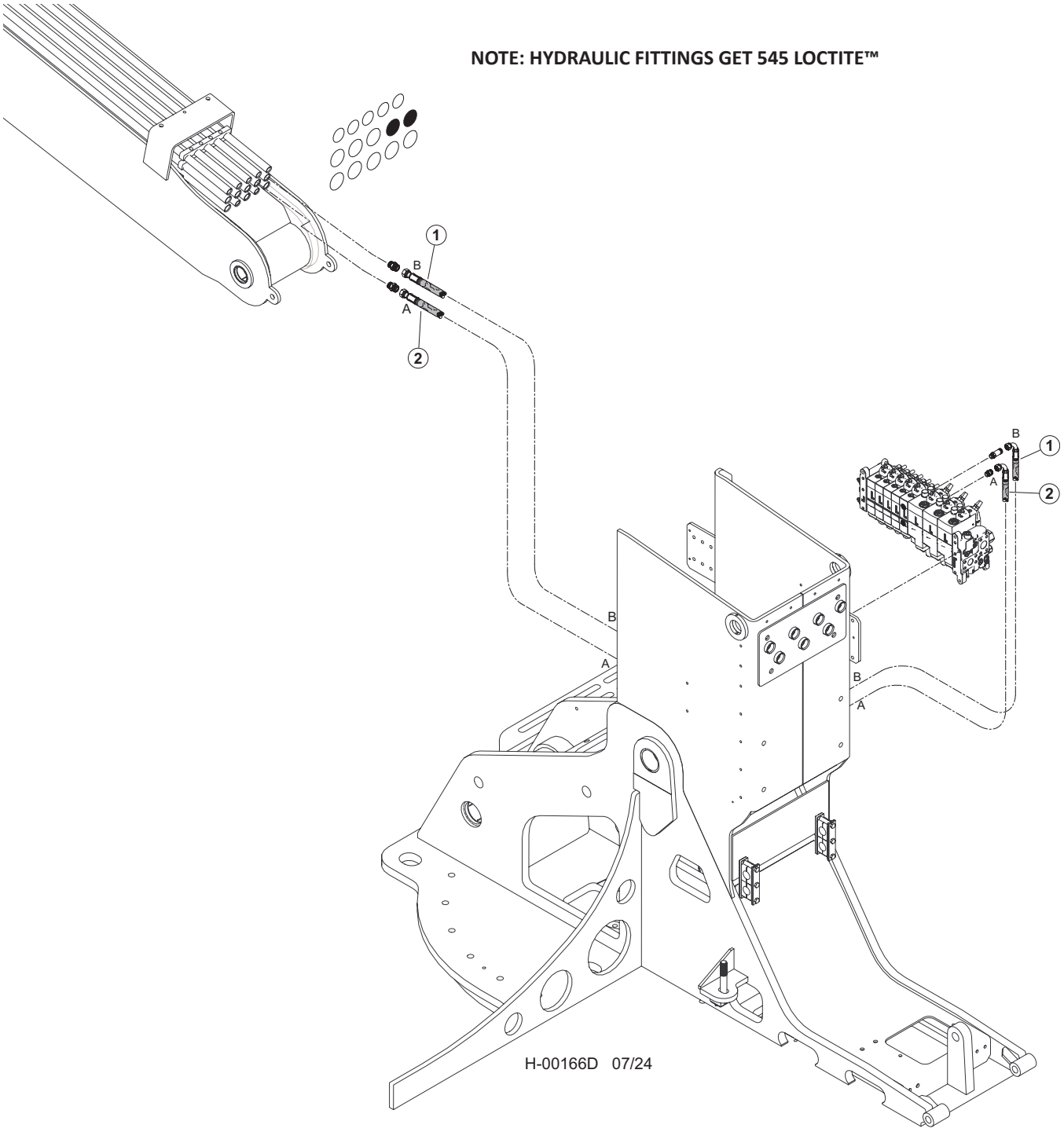

Item	Part #	Description	Qty.
1	65862 - (65856 - KIT)	HOSE, HYD, 722TC70.5 12-12OS-12O4-W **- (ACCUMULATOR "B")**	1
2	65862 - (65856 - KIT)	HOSE, HYD, 722TC70.5 12-12OS-12O4-W **- (ACCUMULATOR "A")**	1

H100-00560 - DISC SAW PIPING - LATERAL TILT (K220/L90 VALVE)
MAIN VALVE TO BOOM

NOTE: HYDRAULIC FITTINGS GET 545 LOCTITE™

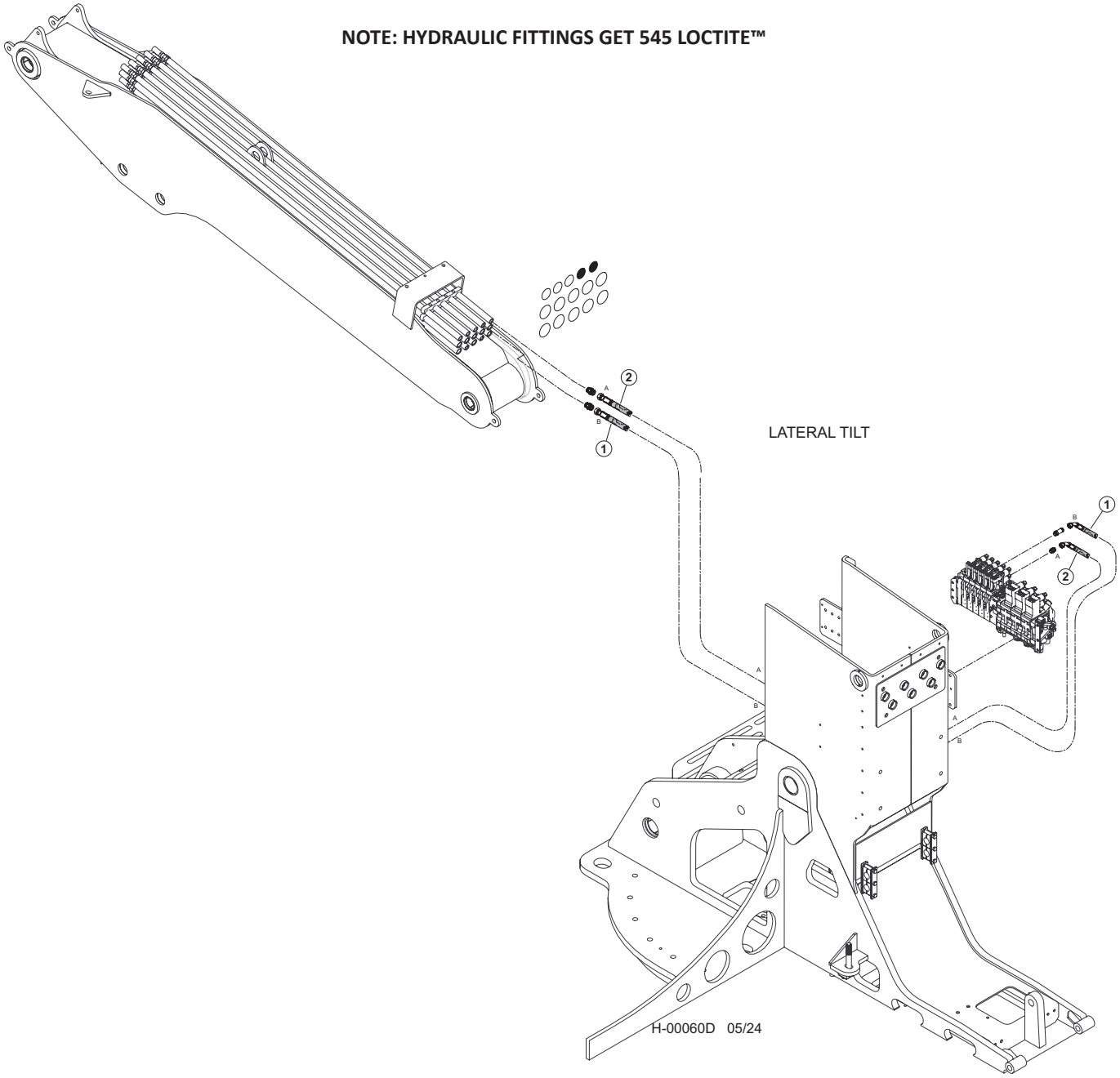

Item	Part #	Description	Qty.
1	57942 - (KIT)	HOSE ASSY - 722TC65 10-10OS-10O4-W - (LATERAL TILT “B”)	1
2	57942 - (KIT)	HOSE ASSY - 722TC64 10-10OS-10O4-W - (LATERAL TILT “A”)	1

H200-00280 - DISC SAW PIPING - LATERAL TILT (W450/W300 VALVE)
MAIN VALVE TO BOOM

NOTE: HYDRAULIC FITTINGS GET 545 LOCTITE™

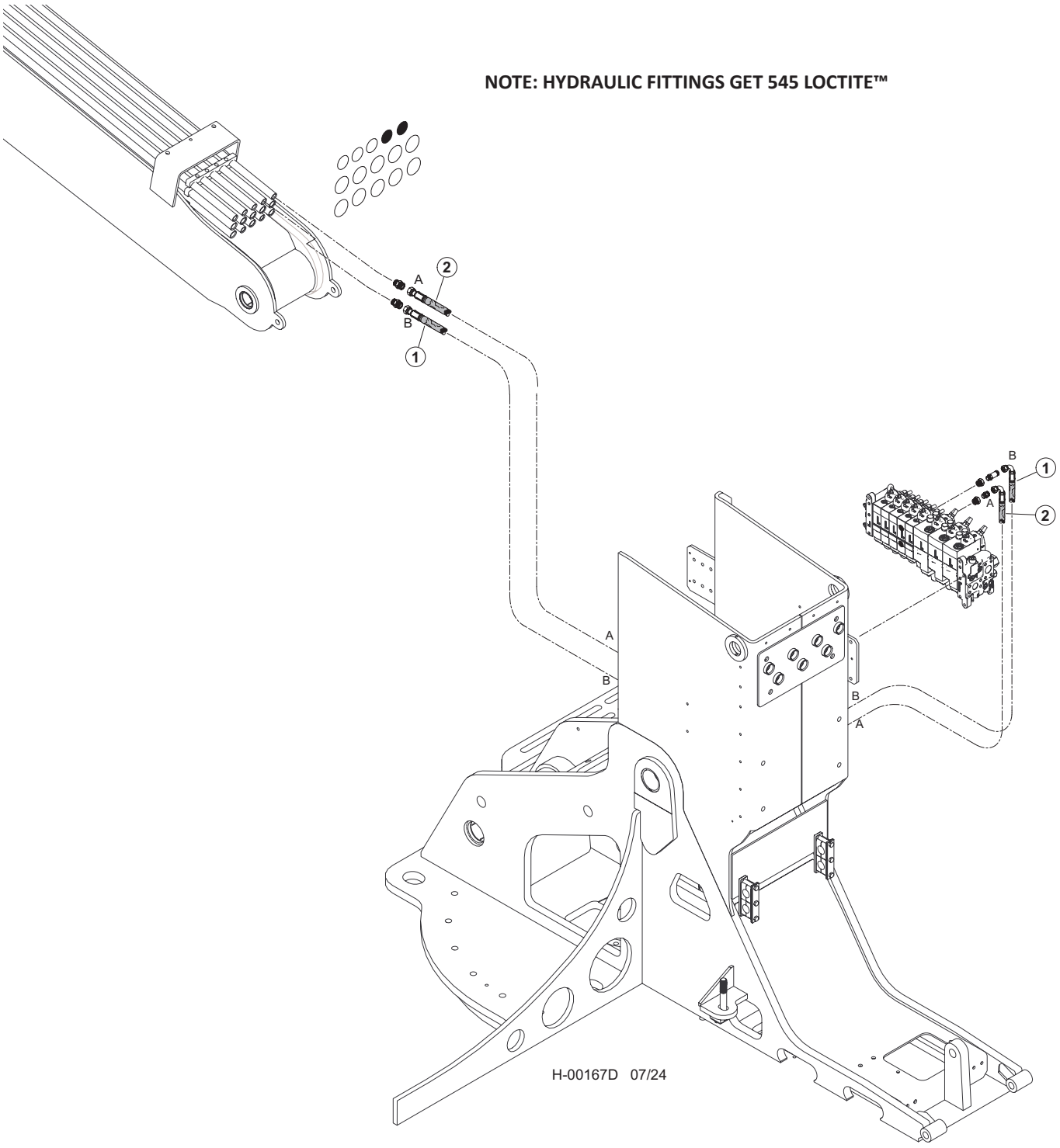

Item	Part #	Description	Qty.
1	65863 - (65856 - KIT)	HOSE, HYD, 722TC65.5 10-10OS-10O4-W - **(LATERAL TILT "B")**	1
2	65863 - (65856 - KIT)	HOSE, HYD, 722TC65.5 10-10OS-10O4-W - **(LATERAL TILT "A")**	1

H100-00570 - DISC SAW PIPING - CAB LEVEL (K220/L90 VALVE) - MAIN VALVE TO BOOM

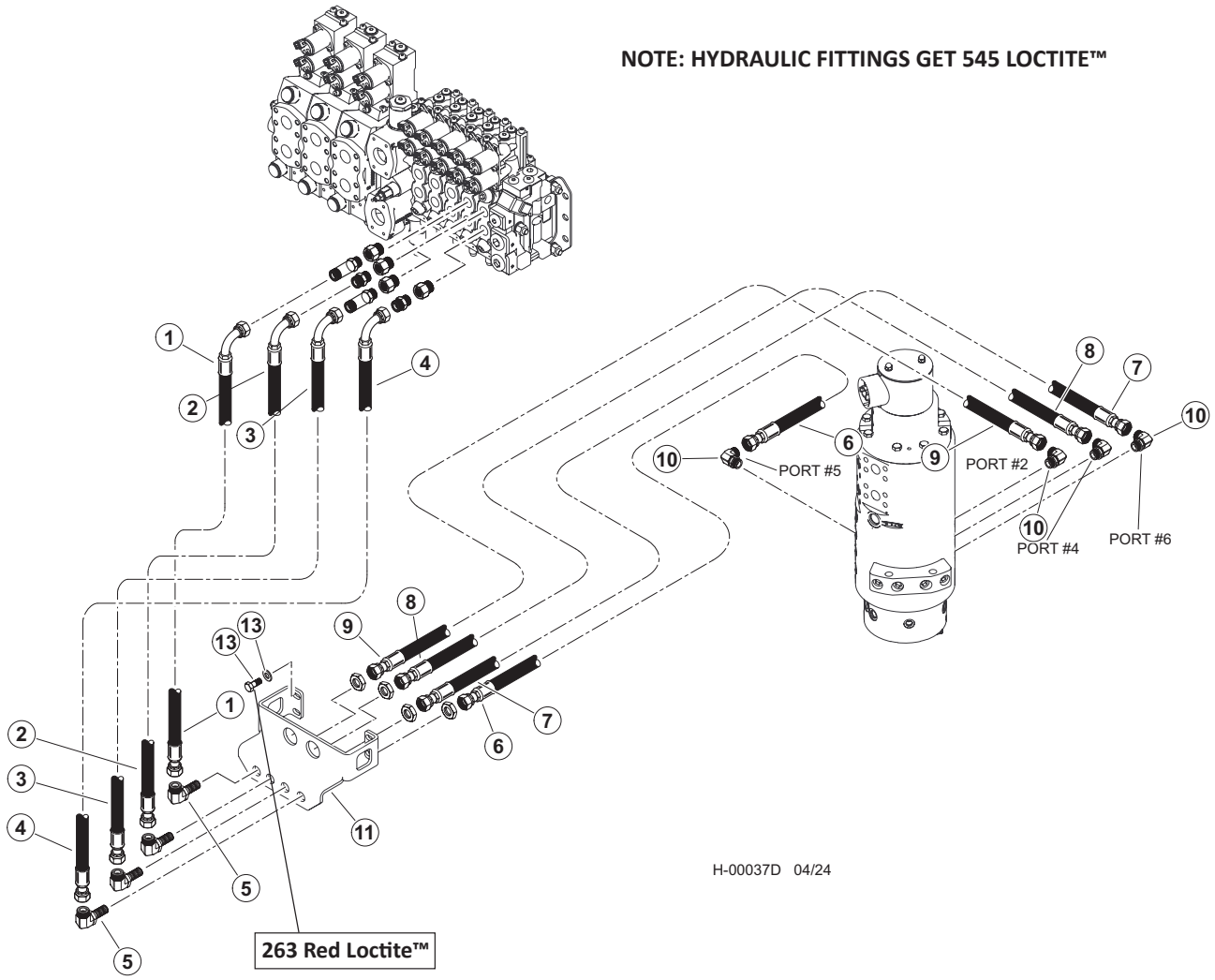

Item	Part #	Description	Qty.
1	57945 - (KIT)	HOSE ASSY - 787TC42 08-08OS-0809 - (VALVE PORT “B” TO BULKHEAD)	1
2	57945 - (KIT)	HOSE ASSY - 787TC42 08-08OS-0809 - (VALVE PORT “B” TO BULKHEAD)	1
3	57945 - (KIT)	HOSE ASSY - 787TC39 08-08OS-0809 - (VALVE PORT “A” TO BULKHEAD)	1
4	57945 - (KIT)	HOSE ASSY - 787TC39 08-08OS-0809 - (VALVE PORT “A” TO BULKHEAD)	1
	57947	KIT, FITTING TRACK LEVEL-D SERIES	1
5	24187	ELBOW, 90 BULKHEAD - 855BH-TT-08	4
6	57945 - (KIT)	HOSE ASSY - 787TC30 08-08OS-080S - (BULKHEAD TO PORT #5 ON ROT MAN)	1
7	57945 - (KIT)	HOSE ASSY - 787TC40 08-08OS-080S - (BULKHEAD TO PORT #6 ON ROT MAN)	1
8	57945 - (KIT)	HOSE ASSY - 787TC41.5 08-08OS-080S - (BULKHEAD TO PORT #4 ON ROT MAN)	1
9	57945 - (KIT)	HOSE ASSY - 787TC44 08-08OS-080S - (BULKHEAD TO PORT #2 ON ROT MAN)	1
10	16360	ELBOW, 90 - FF1868T-0808S	4
11	60559	BULHEAD, FRONT - TM	1
12	15542	BOLT - .375” X .75”	2
13	15528	WASHER, SAE FLAT - .375” OR 3/8” **263 RED LOCTITE™**	2

H200-00290 - DISC SAW PIPING - CAB LEVEL (W450/W300 VALVE)
MAIN VALVE TO BOOM

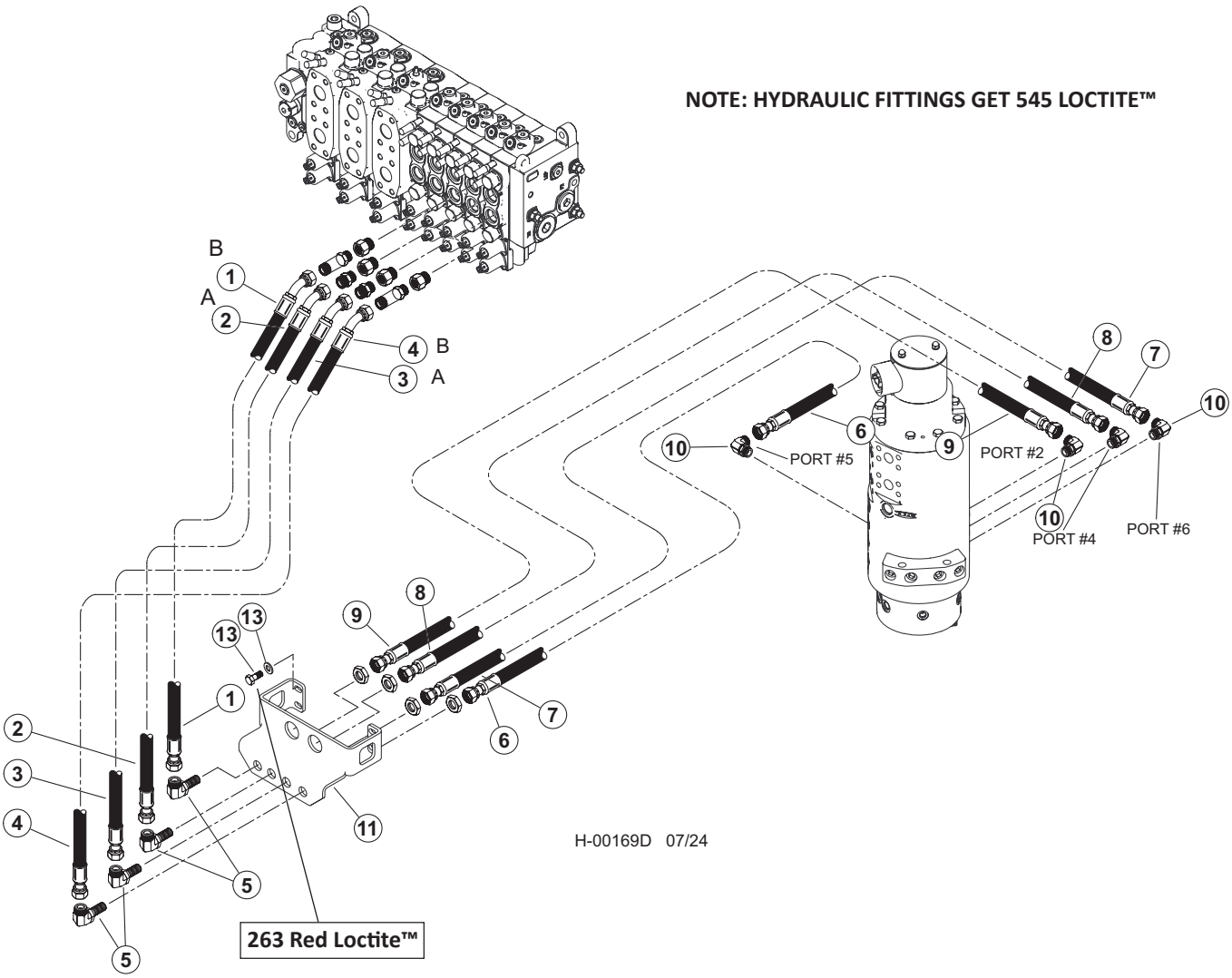

Item	Part #	Description	Qty.
1	65621 - (65619 - KIT)	HOSE, HYD, 787TC45 08-08OS-08O9 - **(VALVE PORT "B" TO BULKHEAD)**	1
2	65621 - (65619 - KIT)	HOSE, HYD, 787TC45 08-08OS-08O9 - **(VALVE PORT "B" TO BULKHEAD)**	1
3	65620 - (65619 - KIT)	HOSE, HYD, 787TC40.5 08-08OS-08O9 - **(VALVE PORT "A" TO BULKHEAD)**	1
4	65620 - (65619 - KIT)	HOSE, HYD, 787TC40.5 08-08OS-08O9 - **(VALVE PORT "A" TO BULKHEAD)**	1
	57947	KIT, FITTING TRACK LEVEL-D SERIES	1
5	24187	ELBOW, 90 BULKHEAD - 855BH-TT-08	4
6	65892 - (65891 - KIT)	HOSE ASSY - 787TC30 08-08OS-080S - **(BULKHEAD TO PORT #5 ON ROT MAN)**	1
7	65952 - (65891 - KIT)	HOSE ASSY - 787TC40 08-08OS-080S - **(BULKHEAD TO PORT #6 ON ROT MAN)**	1
8	65894 - (65891 - KIT)	HOSE ASSY - 787TC41.5 08-08OS-080S - **(BULKHEAD TO PORT #4 ON ROT MAN)**	1
9	65895 - (65891 - KIT)	HOSE ASSY - 787TC44 08-08OS-080S - **(BULKHEAD TO PORT #2 ON ROT MAN)**	1
10	16360	ELBOW, 90 - FF1868T-0808S	4
11	60559	BULHEAD, FRONT - TM	1
12	15542	BOLT - .375" X .75"	2
13	15528	WASHER, SAE FLAT - .375" OR 3/8" **263 RED LOCTITE™**	2

H200-00300 - DISC SAW PIPING - MAIN BOOM CYLINDER (W450/W300 VALVE) (BULKHEAD FITTING TO CYLINDER)

NOTE: HYDRAULIC FITTINGS GET 545 LOCTITE™

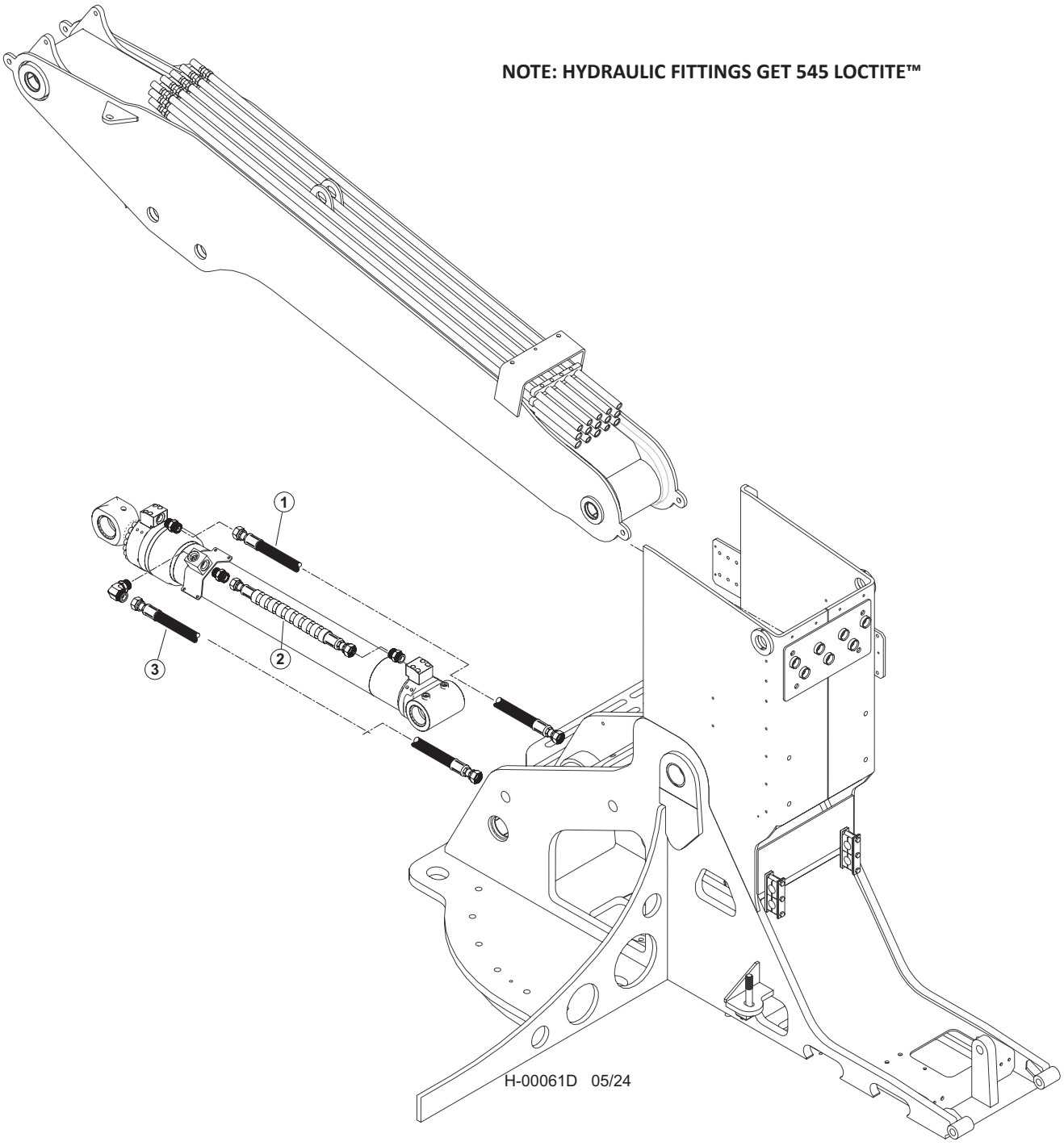

Item	Part #	Description	Qty.
1	65802 - (65799 - KIT)	HOSE, HYD, 787TC70 16-16OS-16OS - **(ROD END OF BOOM CYLINDER)**	1
2	65800 - (65799 - KIT)	HOSE, HYD, 787TC45.5 16-16OS-16OS-SW - **(BASE END OF BOOM CYLINDER TO BLOCK)**	1
3	65801 - (65799 - KIT)	HOSE, HYD, 787TC60 16-16OS-16OS - **(BASE END OF BOOM CYLINDER)**	1

H100-00580 - DISC SAW PIPING - TOOL TILT (MAIN BOOM TO CYLINDER)

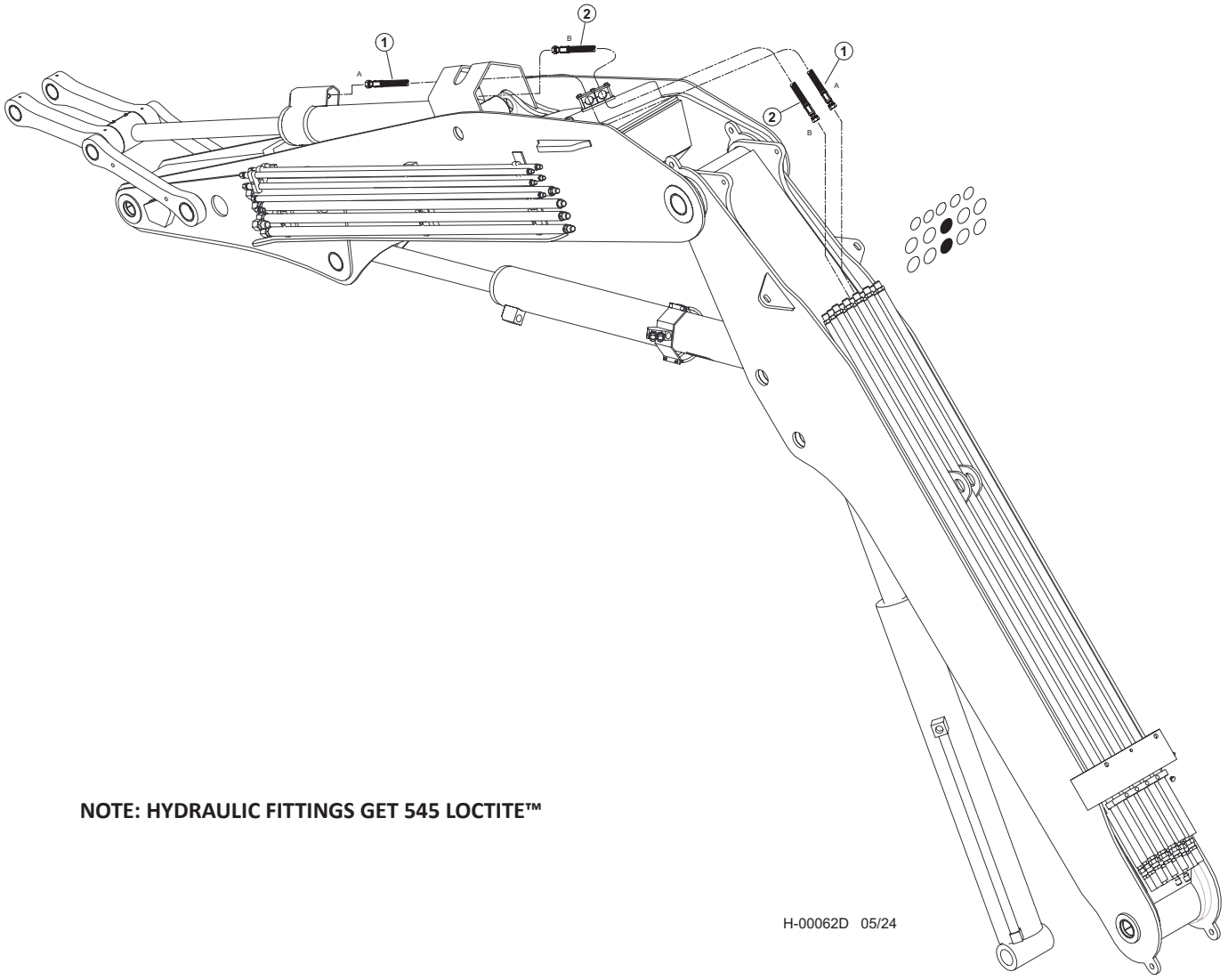

NOTE: HYDRAULIC FITTINGS GET 545 LOCTITE™

Item	Part #	Description	Qty.
1	65847 - (65837 - (KIT)	HOSE, HYD, 787TC160 16-16OS-16OS - **(TOOL CYLINDER "A")**	1
2	65846 - (65837 - (KIT)	HOSE, HYD, 787TC108 16-16OS-16OS - **(TOOL CYLINDER "B")**	1

H100-00590 - DISC SAW PIPING - STICK BOOM (MAIN BOOM TO STICK CYLINDER)

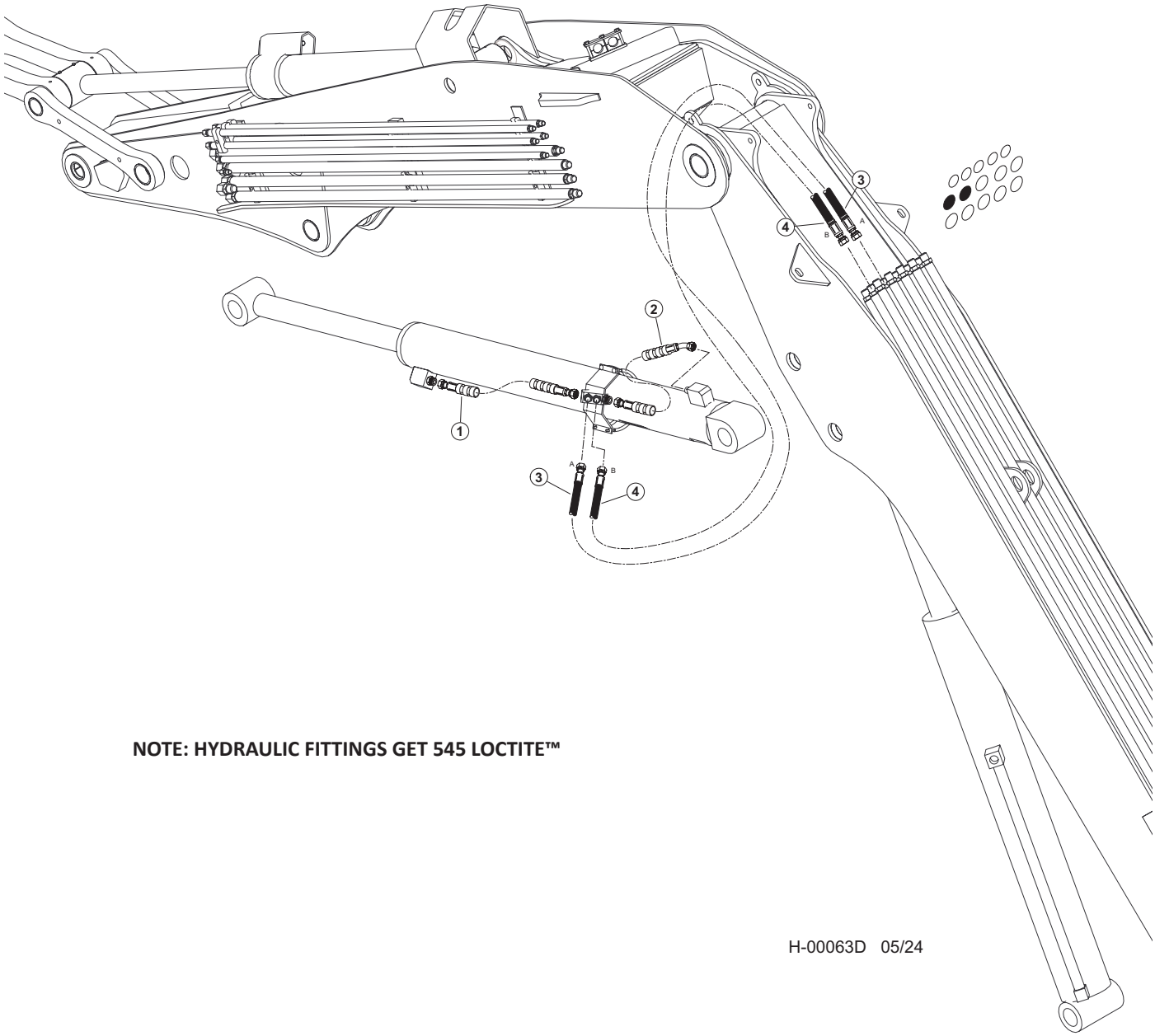

NOTE: HYDRAULIC FITTINGS GET 545 LOCTITE™

H-00063D 05/24

Item	Part #	Description	Qty.
1	65855	HOSE, HYD, 787TC38 16-16OS-16OS-SW - **(STICK CYLINDER ROD)**	1
2	65853	HOSE, HYD, 787TC17 16-16OS-16O4-SW - **(STICK CYLINDER BASE)**	1
3	65848 - (65837 - KIT)	HOSE, HYD, 787TC79 16-16OS-16OS - **(STICK CYLINDER ROD - "A")**	1
4	65849 - (65837 - KIT)	HOSE, HYD, 787TC81 16-16OS-16OS - **(STICK CYLINDER BASE - "B")**	1

H100-00600 - DISC SAW PIPING - CLAMP (MAIN BOOM TO STICK BOOM)

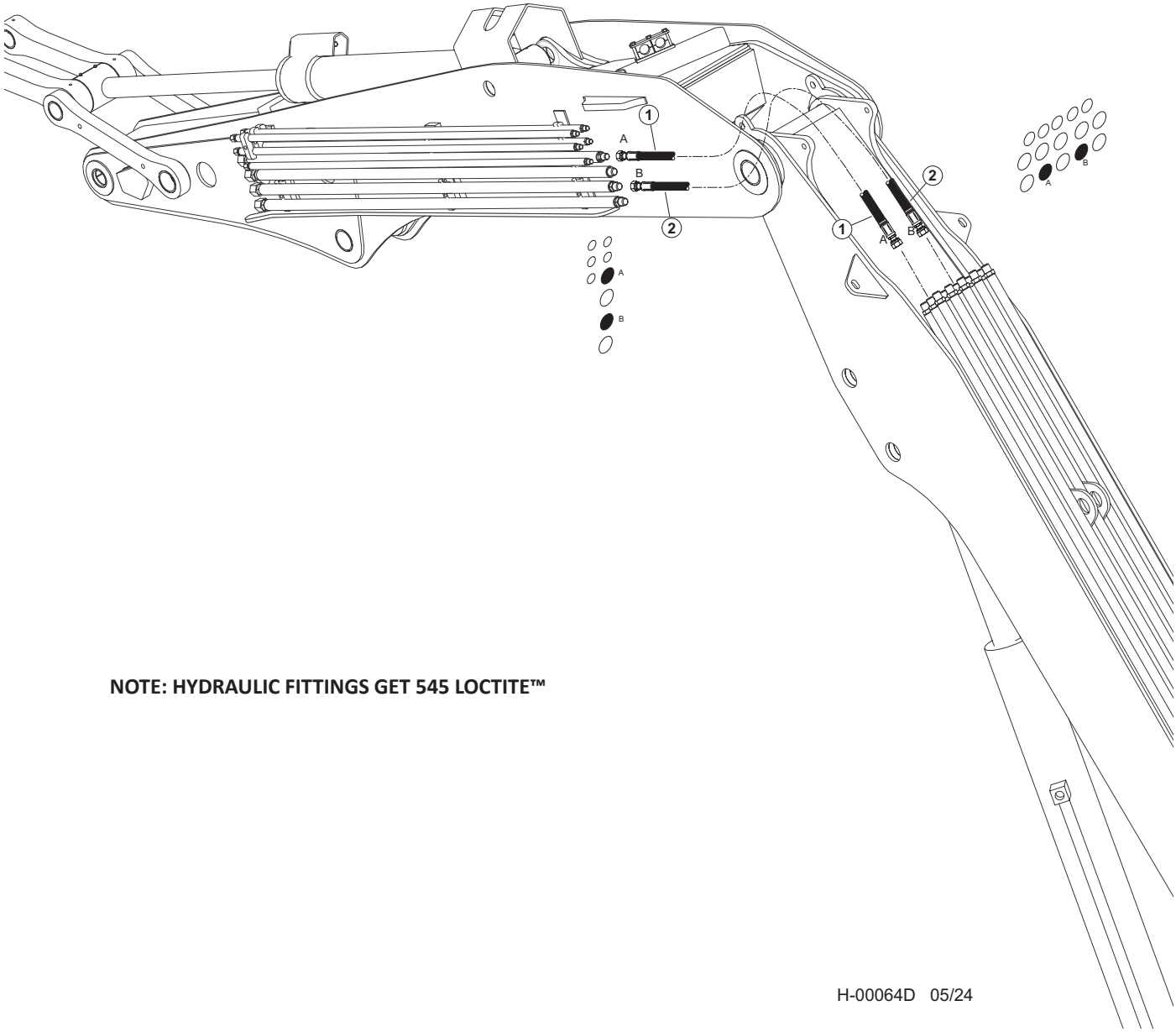

NOTE: HYDRAULIC FITTINGS GET 545 LOCTITE™

H-00064D 05/24

Item	Part #	Description	Qty.
1	65844 - (65837 - (KIT)	HOSE, HYD, 722TC72 12-12OS-12OS **- (CLAMP "A")**	1
2	65845 - (65837 - (KIT)	HOSE, HYD, 722TC76 12-12OS-12OS **- (CLAMP "B")**	1

H100-00610 - DISC SAW PIPING - ACCUMULATOR (MAIN BOOM TO STICK BOOM)

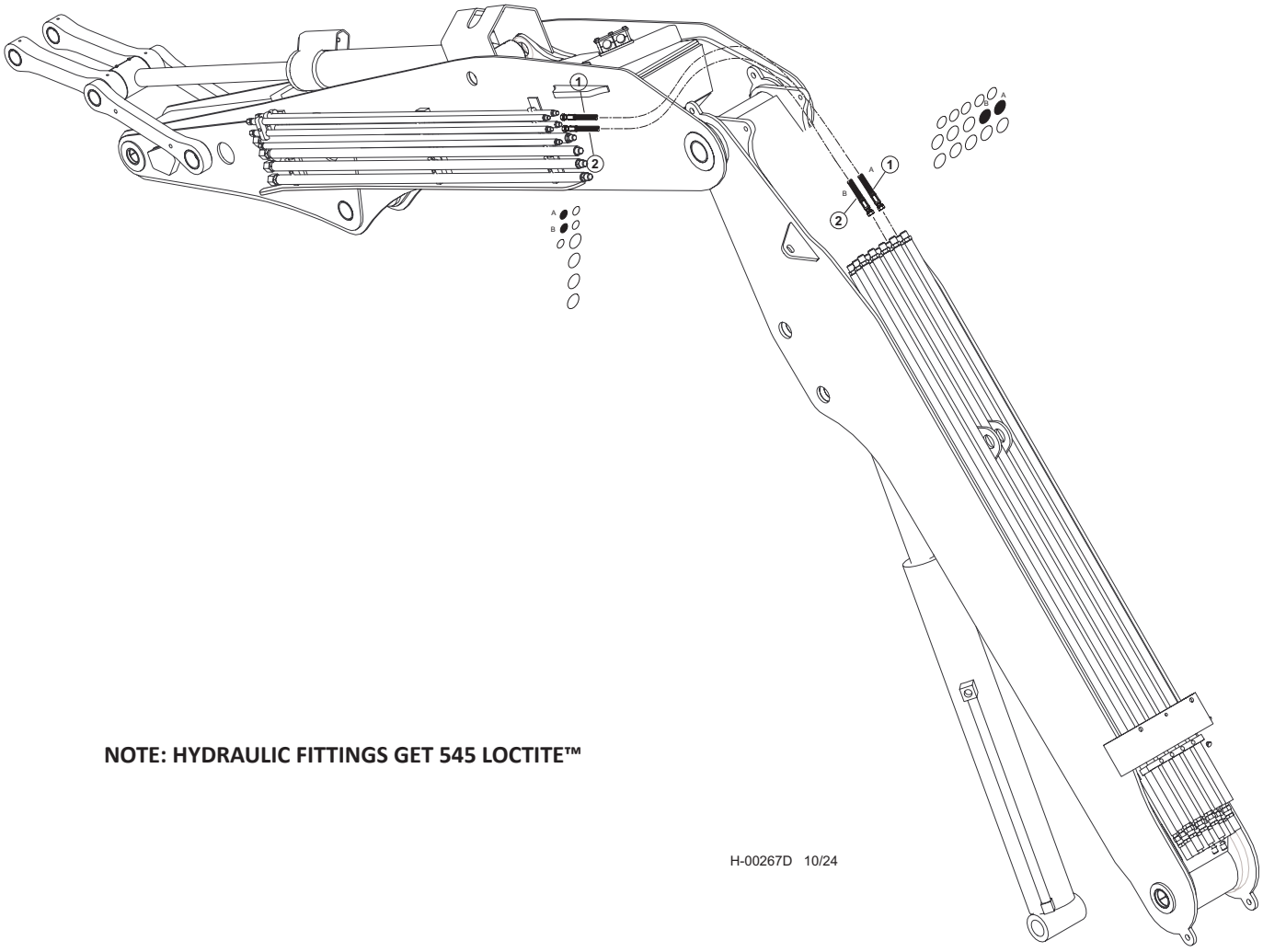

NOTE: HYDRAULIC FITTINGS GET 545 LOCTITE™

H-00267D 10/24

Item	Part #	Description	Qty.
1	65841 - (65837 - KIT)	HOSE, HYD, 722TC80.5 10-10OS-10OS **- (ACCUMULATOR "A")**	1
2	65841 - (65837 - KIT)	HOSE, HYD, 722TC80.5 10-10OS-10OS **- (ACCUMULATOR "B")**	1

H100-00620 - DISC SAW PIPING - LATERAL TILT (MAIN BOOM TO STICK BOOM)

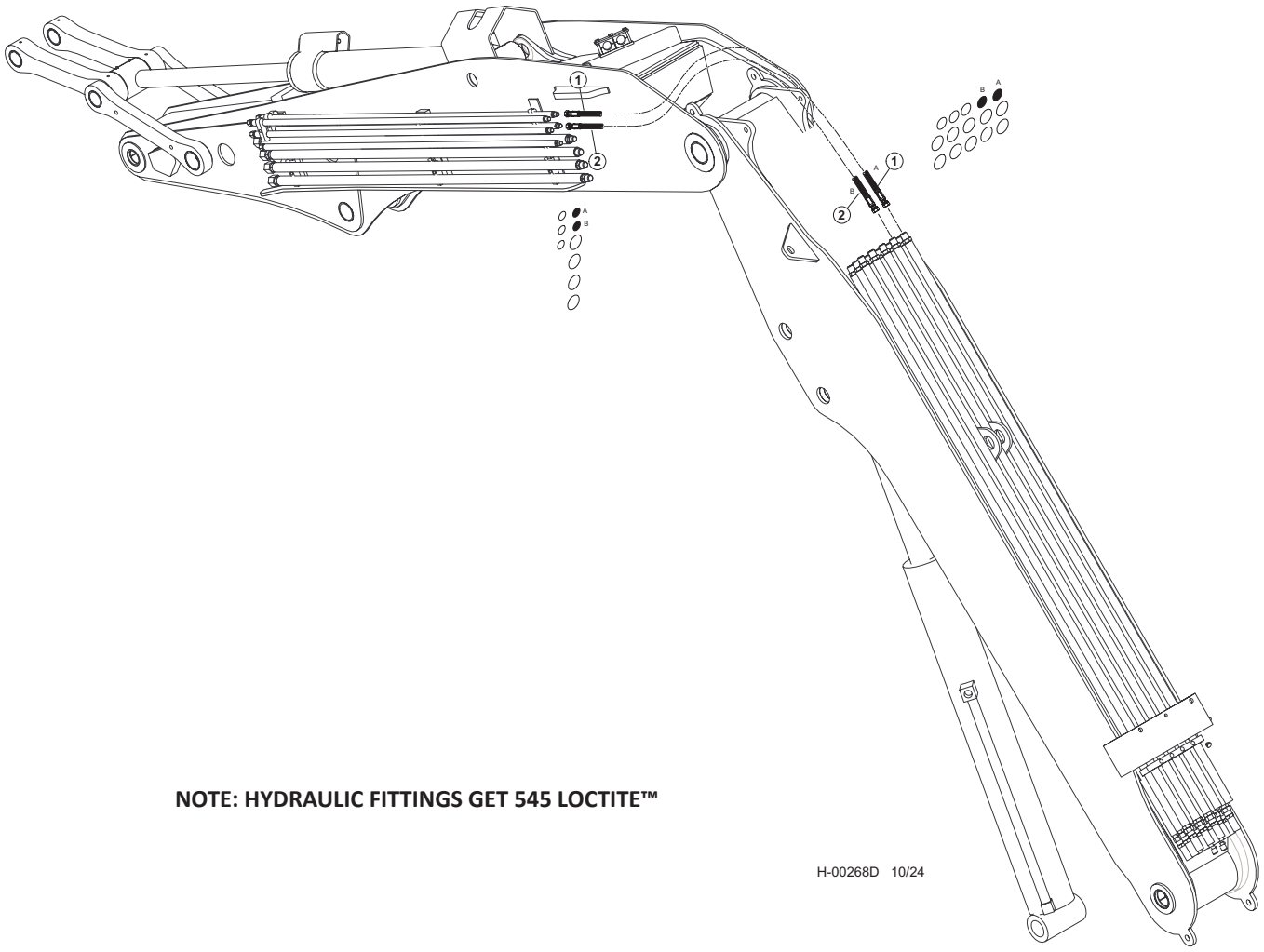

NOTE: HYDRAULIC FITTINGS GET 545 LOCTITE™

Item	Part #	Description	Qty.
1	65843 - (65837 - KIT)	HOSE, HYD, 722TC82.5 10-10OS-10OS - **(LATERAL TILT "A")**	1
2	65843 - (65837 - KIT)	HOSE, HYD, 722TC82.5 10-10OS-10OS - **(LATERAL TILT "B")**	1

H100-00630 - DISC SAW PIPING - PRESSURE & RETURN (MAIN BOOM TO STICK BOOM)

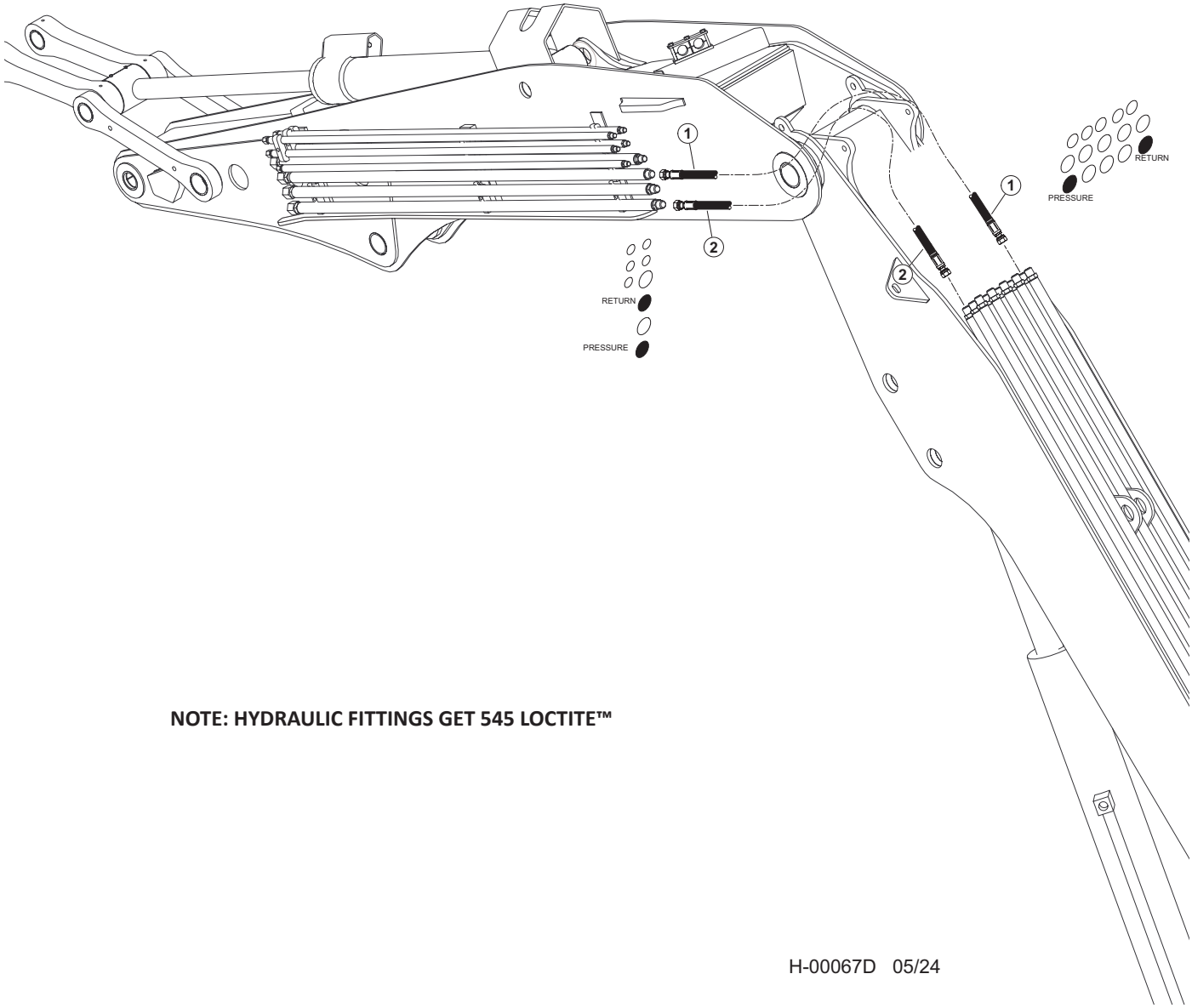

NOTE: HYDRAULIC FITTINGS GET 545 LOCTITE™

H-00067D 05/24

Item	Part #	Description	Qty.
1	65851 - (65837 - (KIT)	HOSE, HYD, 722TC77 16-16OS-16OS - **(RETURN)**	1
2	65802 - (65837 - (KIT)	HOSE, HYD, 787TC70 16-16OS-16OS - **(PRESSURE)**	1

H100-00640 - DISC SAW PIPING - CASE DRAIN (MAIN BOOM TO STICK BOOM)

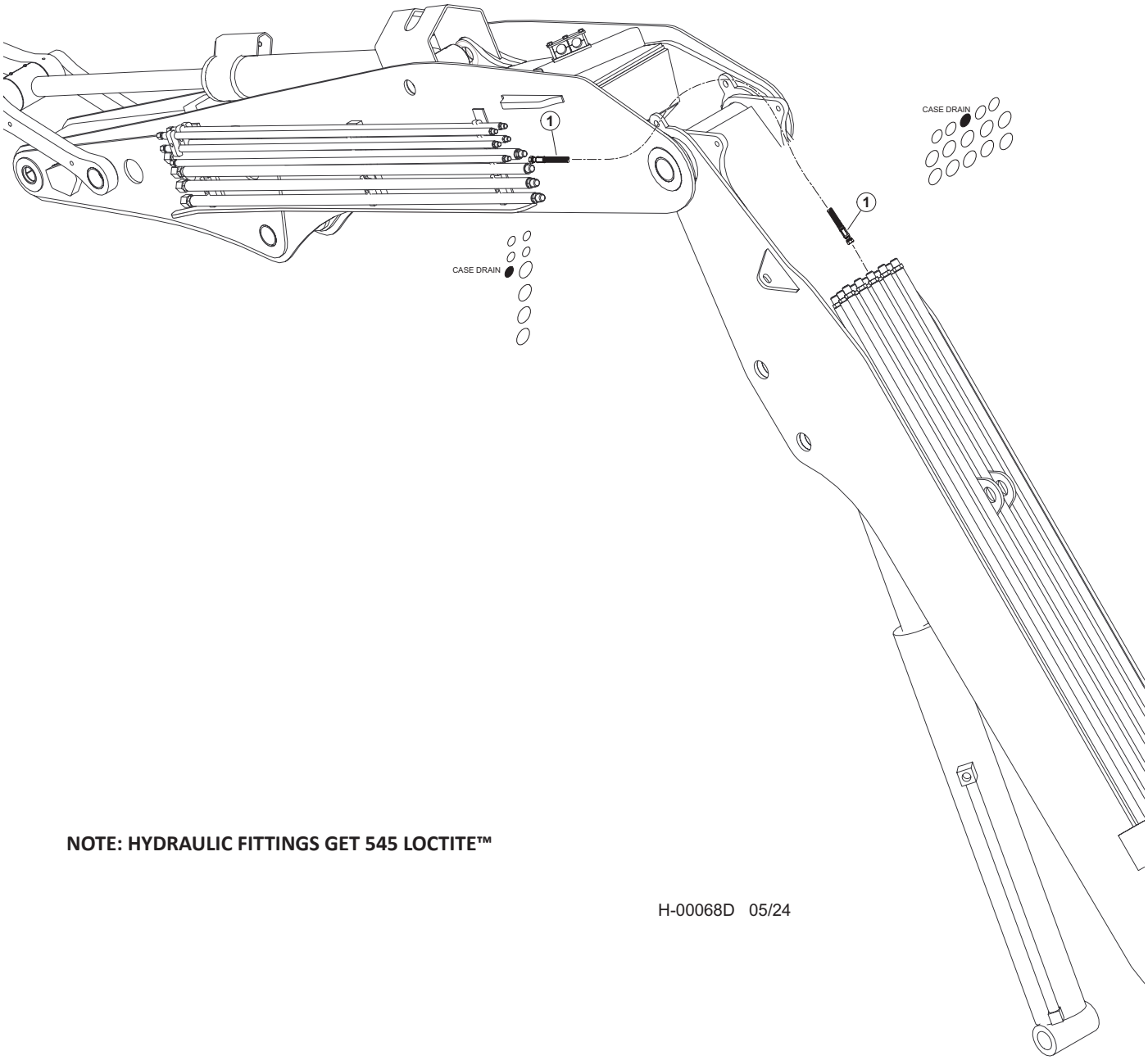

NOTE: HYDRAULIC FITTINGS GET 545 LOCTITE™

H-00068D 05/24

Item	Part #	Description	Qty.
1	65839 - (65837 - KIT)	HOSE, HYD, 722TC79.5 08-08OS-08OS - **(CASE DRAIN)**	1

H100-00650 - DISC SAW PIPING - LIGHT WIRE (MAIN BOOM TO STICK BOOM)

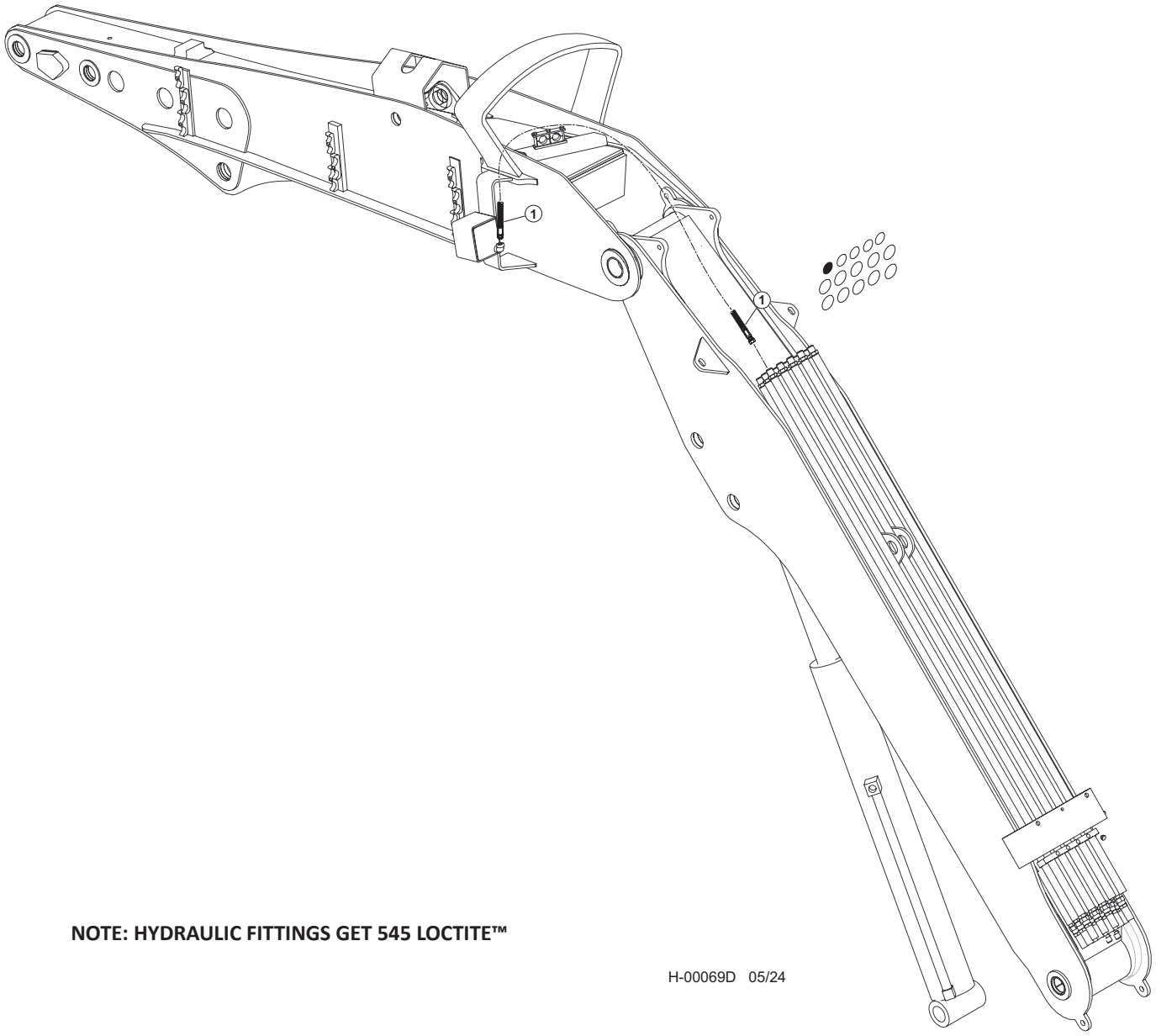

NOTE: HYDRAULIC FITTINGS GET 545 LOCTITE™

H-00069D 05/24

Item	Part #	Description	Qty.
1	65838 - (65837 - KIT)	HOSE, HYD, 387TC84 06-06OS-08PS **- (LIGHT WIRE)**	1

H100-00660 - DISC SAW PIPING - GREASE HOSES (MAIN BOOM TO STICK BOOM)

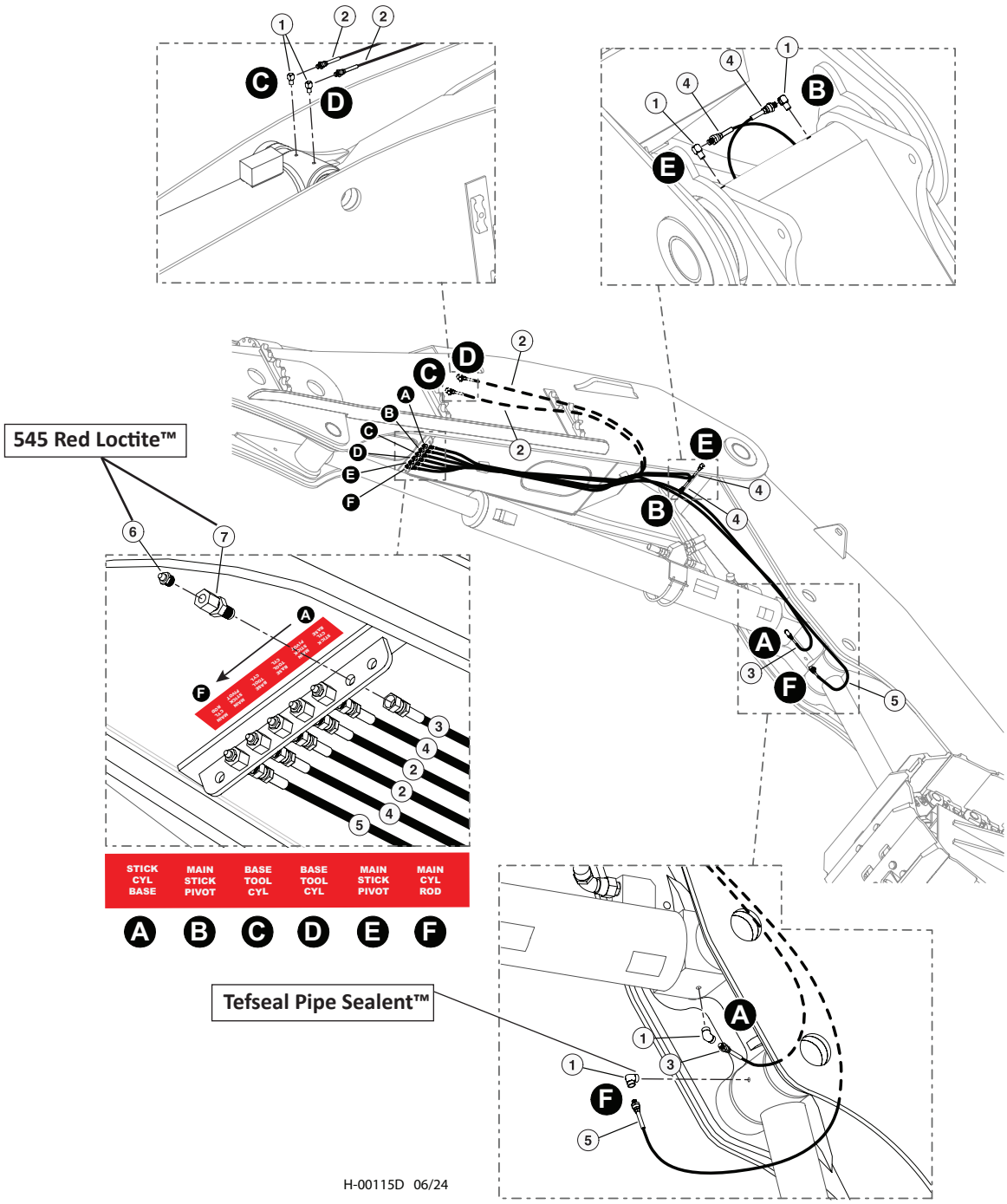

Item	Part #	Description	Qty.
1	22281	FITTING, 90° - 5546132 **TEFSEAL PIPE SEALANT™**	4
2	55605 - (KIT)	HOSE ASSY - 2133-02-02PS-04JS (TOOL CYL BASE)	2
3	55605 - (KIT)	HOSE ASSY - 2138-02-02PS-04JS (STICK CYL BASE)	1
4	55605 - (KIT)	HOSE ASSY - 2188-02-02PS-04JS (MAIN/STICK PIVOT)	2
5	55605 - (KIT)	HOSE ASSY - 2147-02-02PS-04JS (MAIN CYL ROD)	1
6	15658	CONNECTOR, STRAIGHT BULKHEAD - 2239-2-4S **545 RED LOCTITE™**	6
7	10704	FITTING, STRAIGHT GREASE - 1/8” PIPE THREAD **545 RED LOCTITE™**	6

H100-00670 - MAIN BOOM PIPING - DISC SAW/BAR SAW COMBO

NOTE: HYDRAULIC FITTINGS GET 545 LOCTITE™

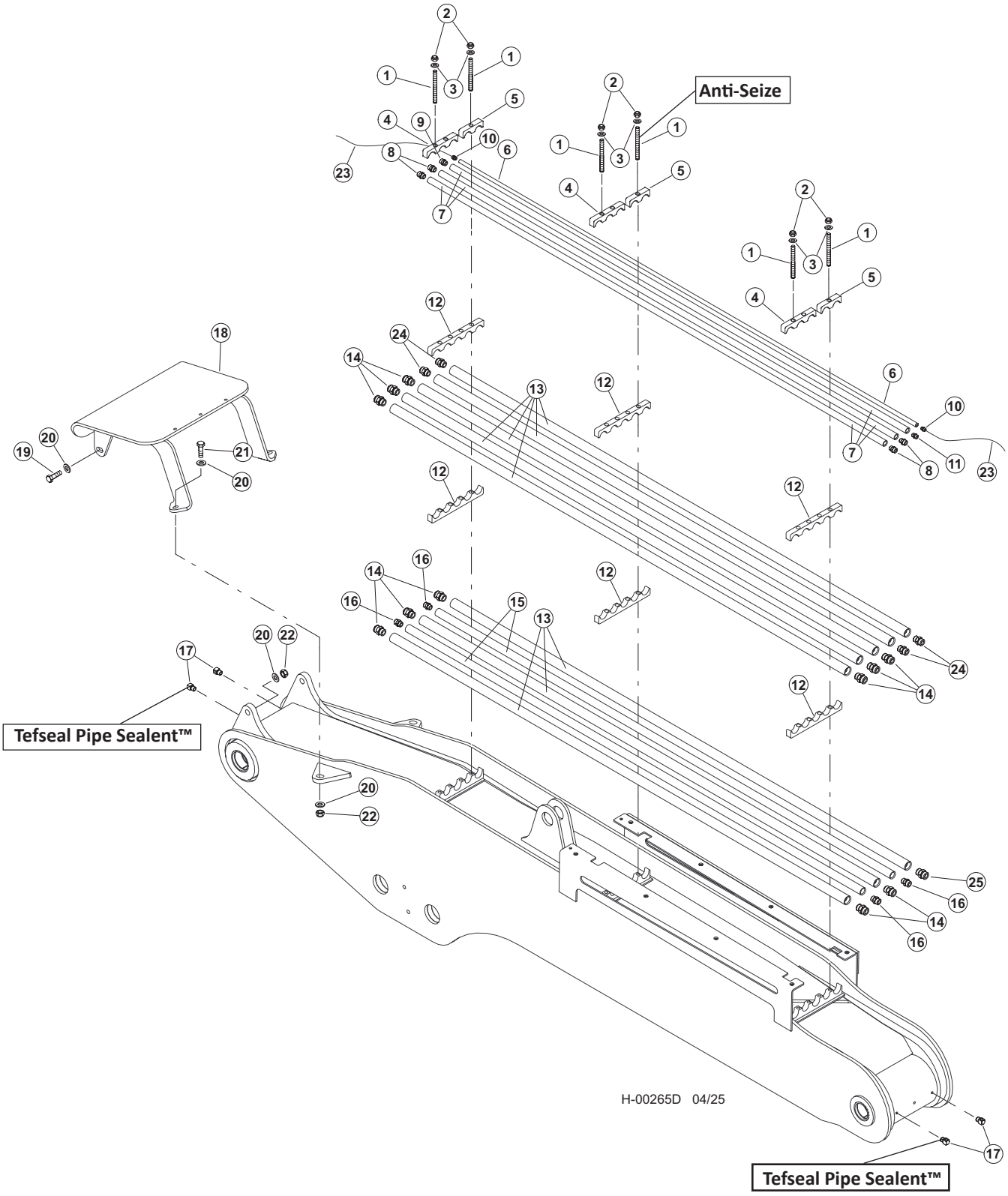

H100-00670 - MAIN BOOM PIPING - DISC SAW/BAR SAW COMBO

Item	Part #	Description	Qty.
1	17062	STUD - .625” X 8” **ANTI-SEIZE™**	12
2	15563	NUT, NYLOCK - .625”	12
3	10771	WASHER, SAE FLAT - .625	12
4	17063 (KIT - 57400)	CONNECTOR, STR - FF1852T-2016S	1
5	53116	TUBELINE - .3/8” X 108” - BLACK PIPE	1
6	51815	TUBELINE - .5” X 108”	5
7	51880 (KIT - 57400)	CONNECTOR, STR - (10-8 F50L0-S)	4
8	15117 (KIT - 57400)	CONNECTOR, STR - FF1852T-1208S	1
9	51878 (KIT - 57400)	CONNECTOR, STR - MALE PIPE (6-6 FLO-S)	2
10	16913 (KIT - 57400)	CONNECTOR, STR - FF1852T-0808S	1
11	52155	CLAMP, SADDLE - DRILLED (5-1” TUBES)	9
12	51833	TUBELINE - 1” X 108” FB MAIN	8
13	15225 (KIT - 57400)	CONNECTOR, STR - FF1852T-1616S	15
14	51834	TUBELINE - .75” X 108” FB MAIN	2
15	15152 (KIT - 57400)	CONNECTOR, STR - FF1852T-1212S	4
16	22281	ELBOW, 1/8-27 NPTF(M), 1/8-17 NPTF(F),90 **TEFSEAL PIPE SEALANT™**	4
17	53927	GUARD, HOSE - MAIN BOOM (FB)(53919 BOOM)	1
18	10840	BOLT - .75” X 3”	2
19	10806	WASHER, 3/4” USS TRU-TORQ	8
20	58398	BOLT - .75” X 2.75”	2
21	10817	NUT, 3/4-10 UNC	4
22	58380	CABLE	30’
23	0790752	CLAMP	3
24	23264	BOLT - .25” X .5”	3
25	10757	WASHER, SAE FLAT - .25”	3

H100-00680 - STICK BOOM PIPING - DISC SAW/BAR SAW COMBO

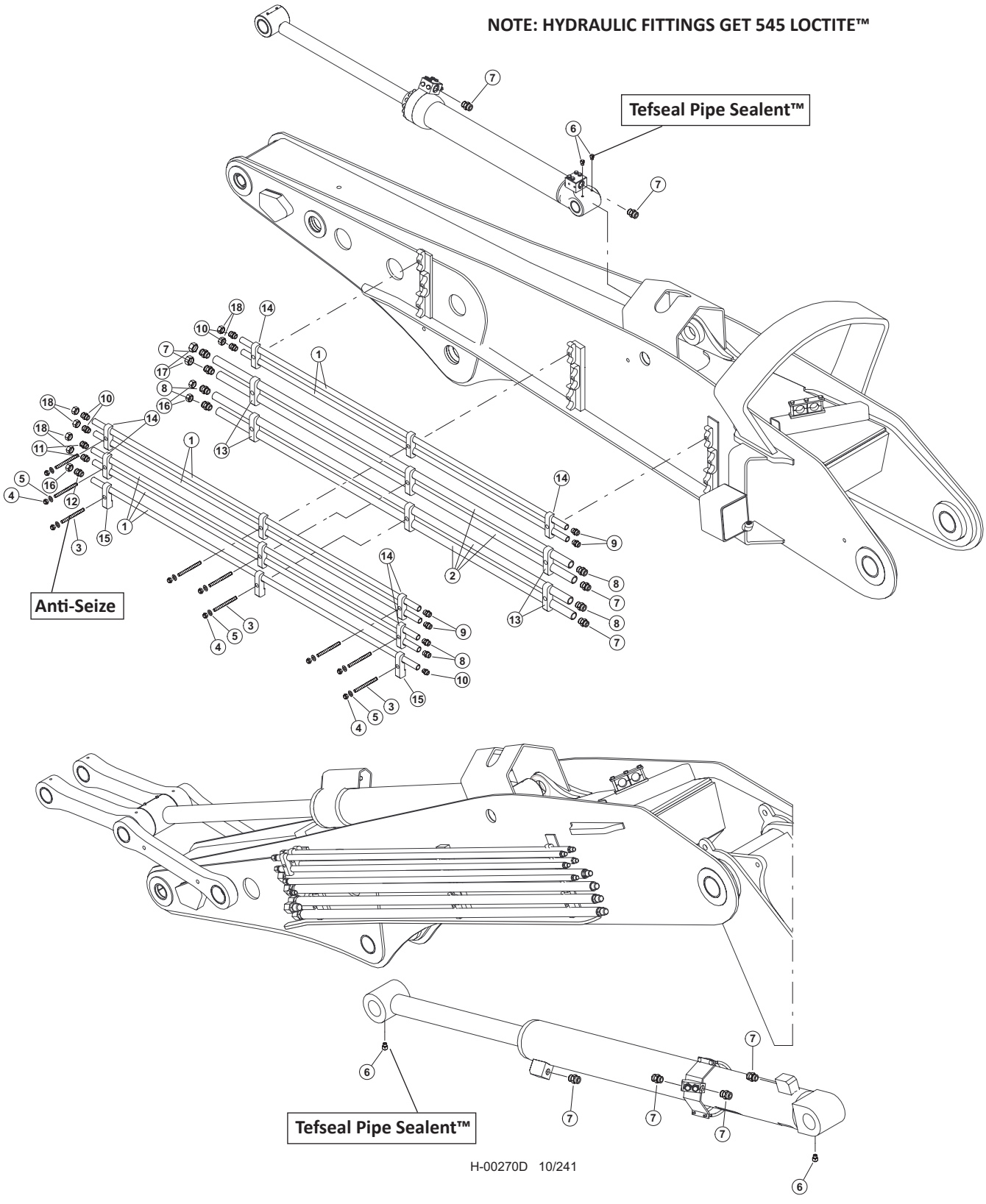

H-00270D 10/241

H100-00680 - STICK BOOM PIPING - DISC SAW/BAR SAW COMBO

Item	Part #	Description	Qty.
1	16513	TUBELINE - .5” X 80”	7
2	16506	TUBELINE - 1” X 84”	4
3	15672	STUD - .625” X 6.25” **ANTI-SEIZE™**	9
4	15563	NUT, NYLOCK - .625”	9
5	10771	WASHER, FLAT - .625”	9
6	22281	ELBOW, 90 - 5546132 **TEFSEAL PIPE SEALANT™**	2
7	15525 (KIT - 57401)	CONNECTOR, STR - FF1852T-1616S	16
8	15226 (KIT - 57401)	CONNECTOR, STR - FF1852T-1216S	4
9	51880 (KIT - 57401)	CONNECTOR, STR - (10-8 F50L0-S)	4
10	15117 (KIT - 57401)	CONNECTOR, STR - FF1852T-0808S	1
11	57394	FITTING, 8-16 F5OLO-S	3
12	16913 (KIT - 57401)	CONNECTOR, STR - FF1852T-1208S	1
13	12447	CLAMP, SADDLE TUBE 1”X1” (TAPPED)	6
14	15272	CLAMP, SADDLE TOP TUBE - .5” & .5”	9
15	23222	CLAMP, SADDLE TOP TUBE - .5” (1 TUBE)	3
16	15437	CAP - FF9863-12S	3
17	15436	CAP - FF9863-16S	2
18	15434	CAP - FF9863-08S	6

H-2224500 - DISC SAW/BAR SAW COMBO PIPING - PRESSURE, RETURN, CASE DRAIN & LOAD SENSE (DISC SAW PUMP TO BOOM)

NOTE: HYDRAULIC FITTINGS GET 545 LOCTITE™

NOTE: APPLY GREASE TO O-RINGS

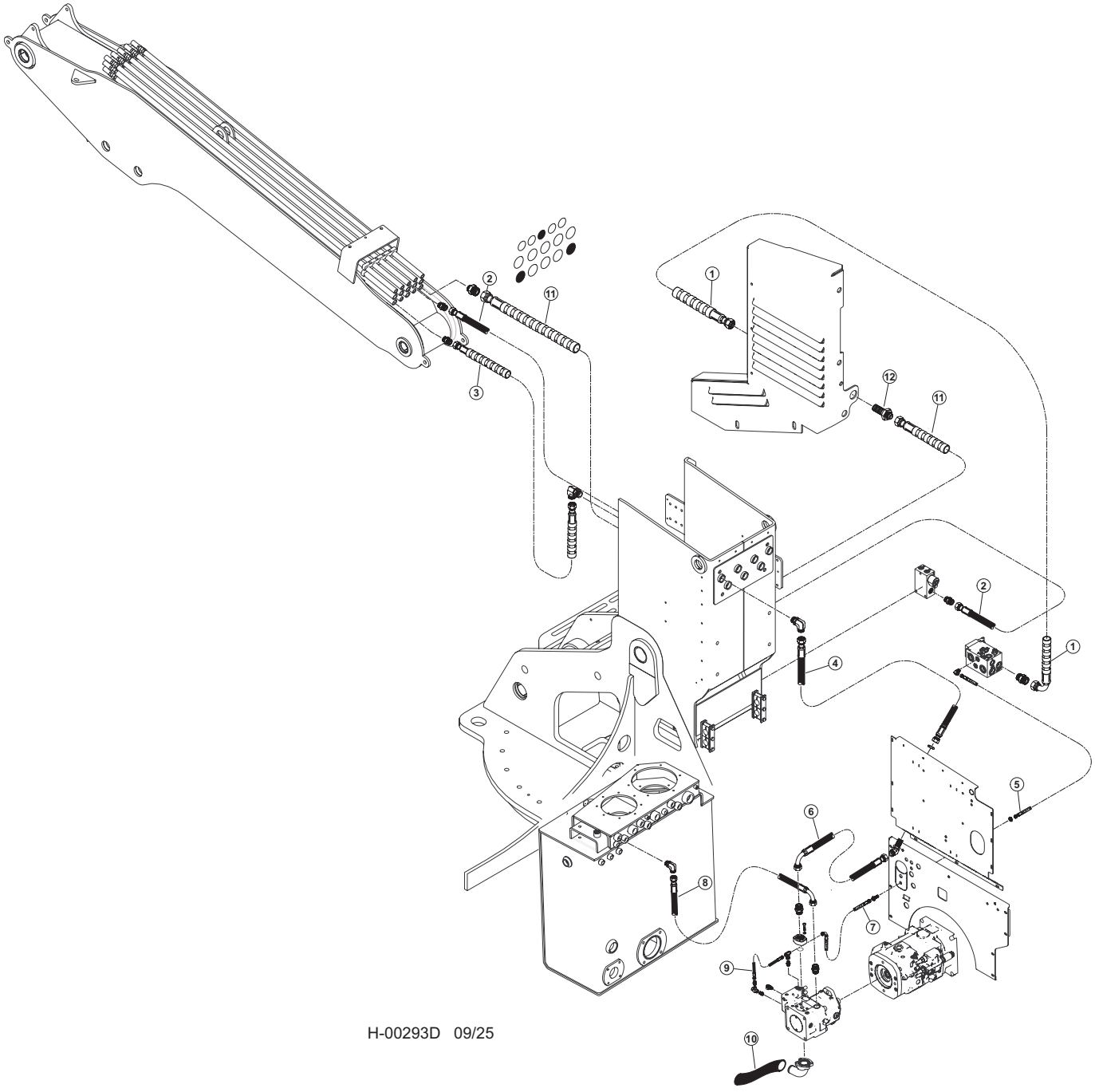

H-00293D 09/25

H-2224500 - DISC SAW/BAR SAW COMBO PIPING - PRESSURE, RETURN, CASE DRAIN & LOAD SENSE (DISC SAW PUMP TO BOOM)

Item	Part #	Description	Qty.
1	689410 - (658781 - KIT)	HOSE, HYD, 187TC44 20-20JS-20J9-SW **- (DISC SAW RETURN)**	1
2	65880 - (65878 - KIT)	HOSE, HYD, 187TC54 12-12OS-12OS-W **- (ATTACHMENT CASE DRAIN)**	1
3	65885 - (65878 - KIT)	HOSE, HYD, 787TC40 16-16OS-16OS-SW **- (DISC SAW PRESSURE)**	1
4	65874 - (65878 - KIT)	HOSE, HYD, 787TC24.5 16-16OS-16OS **- (DISC SAW PRESSURE)**	1
5	65877 - (65878 - KIT)	HOSE, HYD, 787TC39 04-04OS-04OS-W **- (AUXILARY PUMP LS DRAIN)**	1
6	65875 - (65872 - KIT)	HOSE, HYD, 787TC34 16-16OS-16O9 **- (DISC SAW PRESSURE)**	1
7	65876 - (65872 - KIT)	HOSE, HYD, 787TC35 04-04OS-04O9-W **- (AUXILARY PUMP LS DRAIN)**	1
8	65879 - (65878 - KIT)	HOSE, HYD, 187TC27.5 12-12OS-12O9 **- (AUXILARY PUMP CASE DRAIN)**	1
9	65873 - (65872 - KIT)	HOSE, HYD, 787TC11 04-04OS-04O9 **- (AUXILARY PUMP LOAD SENSE)**	1
10	65883 - (65878 - KIT)	HOSE, SUCTION, 7219-200018.532-00-00 **- (AUXILARY PUMP SUCTION INLET)**	1
11	689400 - (658781 - KIT)	HOSE, HYD, 187TC44 20-20JS-20OS-SW **- (DISC SAW RETURN)**	1
12	57491- (57950- KIT)	FITTING, 20 WTX-WLN-S	1

H100-00700 - DISC SAW/BAR SAW COMBO PIPING - TOOL TILT (K220/L90 VALVE)
MAIN VALVE TO BOOM

NOTE: HYDRAULIC FITTINGS GET 545 LOCTITE™

NOTE: APPLY GREASE TO O-RINGS

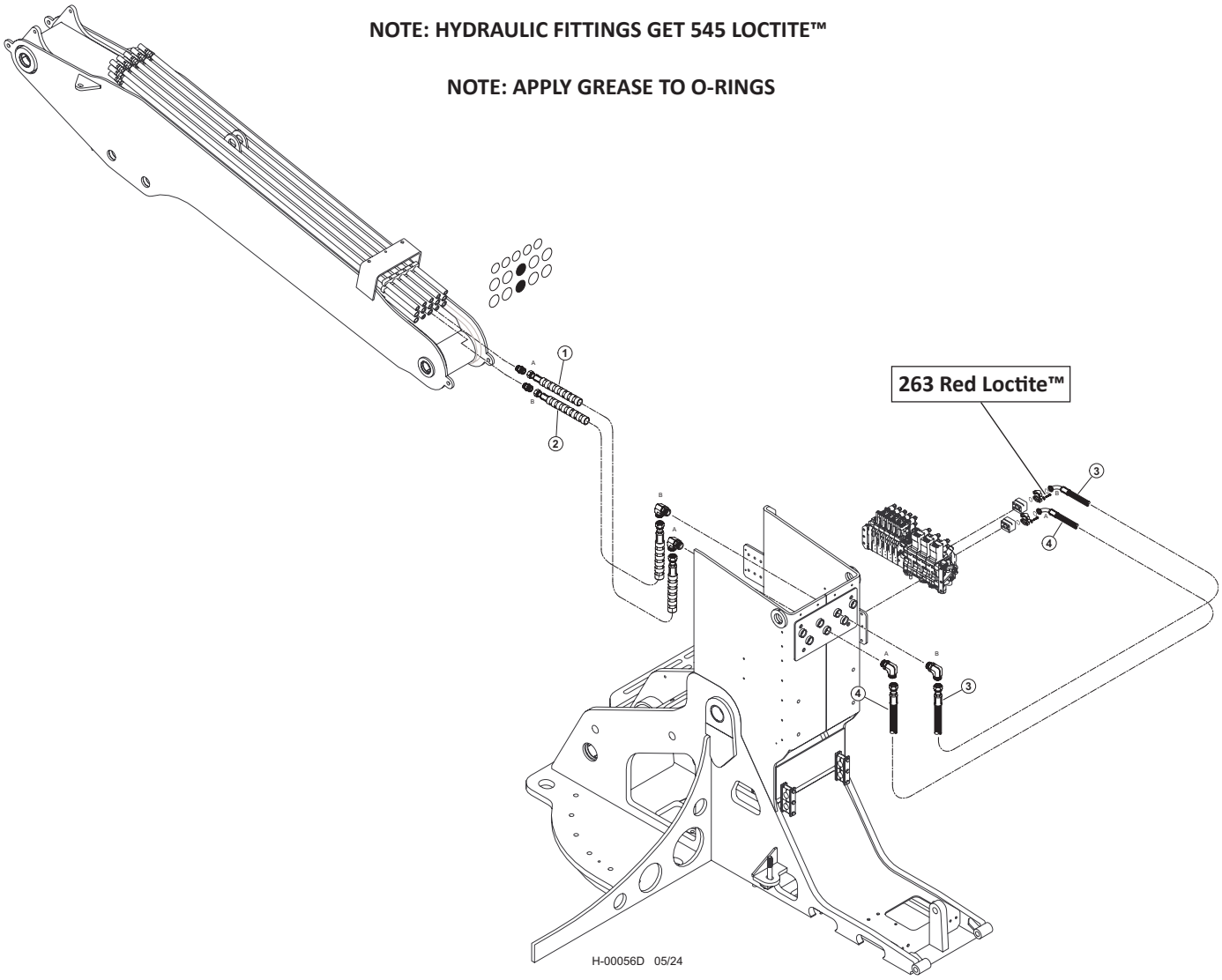

Item	Part #	Description	Qty.
1	57944 - (KIT)	HOSE ASSY - 722TC40 16-16OS-16OS-SW - (TOOL CYLINDER “A”)	1
2	57944 - (KIT)	HOSE ASSY - 722TC40 16-16OS-16OS-SW - (TOOL CYLINDER “B”)	1
3	57944 - (KIT)	HOSE ASSY - 722TC38 16-16OS-16PA9 - (TOOL CYLINDER “B”)	1
4	57944 - (KIT)	HOSE ASSY - 722TC37 16-16OS-16PA9 - (TOOL CYLINDER “A”)	1

H200-00310 - DISC SAW/BAR SAW COMBO PIPING - TOOL TILT (W450/W300 VALVE) MAIN VALVE TO BOOM

NOTE: HYDRAULIC FITTINGS GET 545 LOCTITE™

NOTE: APPLY GREASE TO O-RINGS

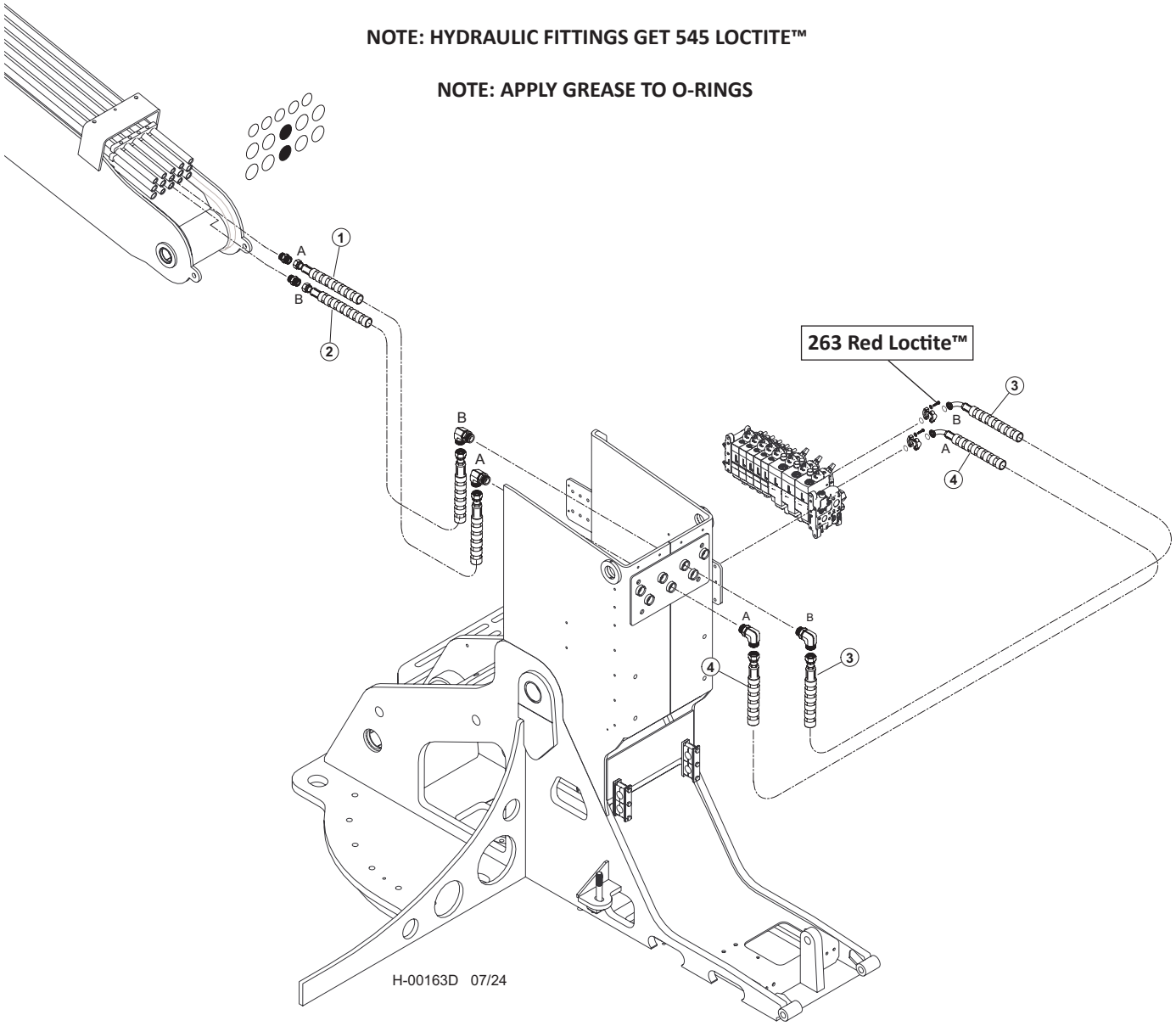

Item	Part #	Description	Qty.
1	65885 - (65896 - KIT)	HOSE, HYD, 787TC40 16-16OS-16OS-SW **("A" PORT - CHIMNEY TO BOOM)**	1
2	65884 - (65896 - KIT)	HOSE, HYD, 787TC39 16-16OS-16OS-SW **("B" PORT - CHIMNEY TO BOOM)**	1
3	65858 - (65856 - KIT)	HOSE, HYD, 787TC36.5 16-16OS-20PH9-SW **("B" PORT - VALVE TO CHIMNEY)**	1
4	65482 - (65856 - KIT)	HOSE, HYD, 787TC36 16-16OS-20PH9-SW **("A" PORT - VALVE TO CHIMNEY)**	1

H100-00710 - DISC SAW/BAR SAW COMBO PIPING - STICK BOOM (K220/L90 VALVE)
VALVE TO BOOM

NOTE: HYDRAULIC FITTINGS GET 545 LOCTITE™

NOTE: APPLY GREASE TO O-RINGS

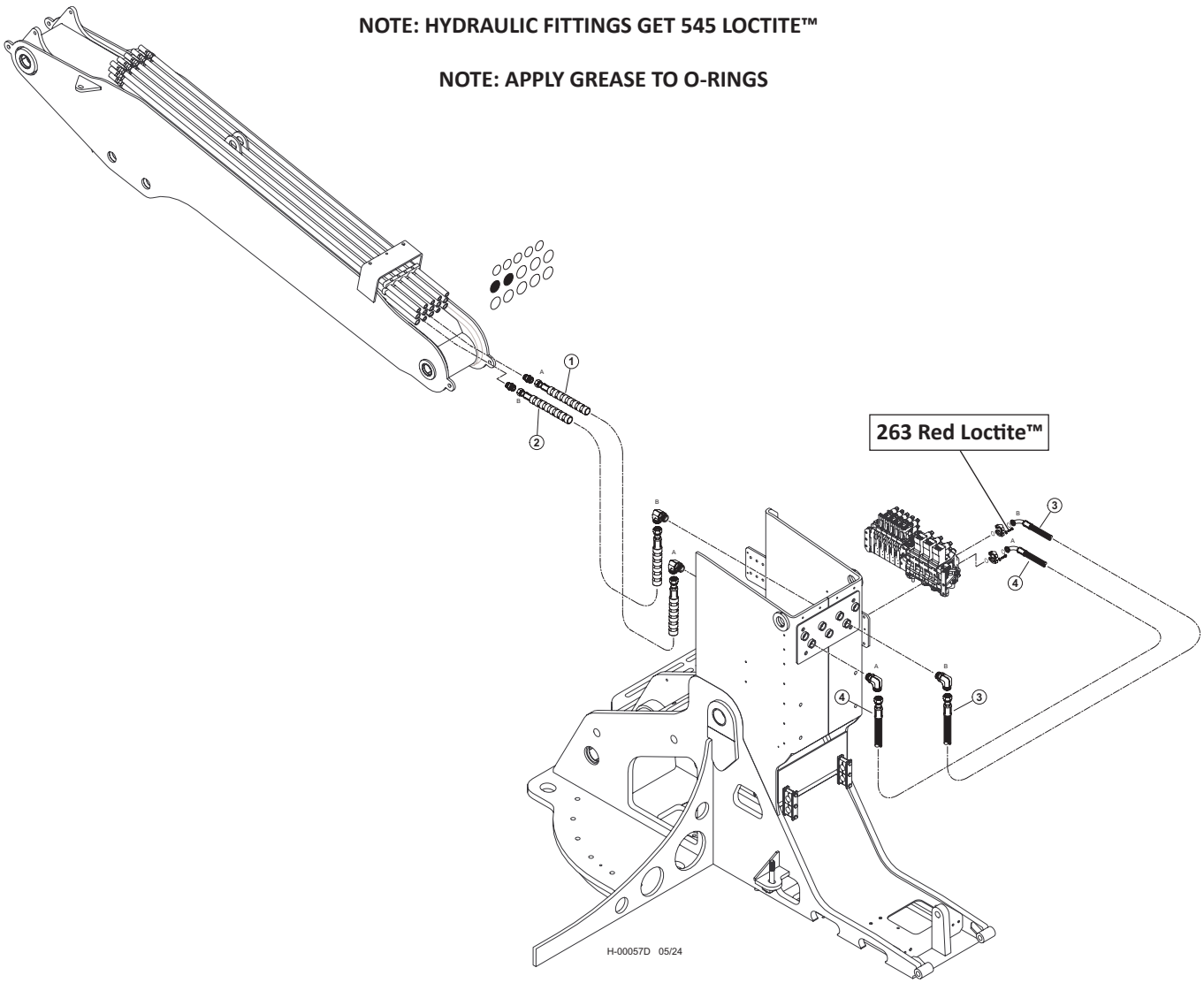

Item	Part #	Description	Qty.
1	57944 - (KIT)	HOSE ASSY - 722TC39 16-16OS-16OS-SW - (STICK CYLINDER “A”)	1
2	57944 - (KIT)	HOSE ASSY - 722TC39 16-16OS-16OS-SW - (STICK CYLINDER “B”)	1
3	57944 - (KIT)	HOSE ASSY - 722TC40 16-16OS-16PA9 - (STICK CYLINDER “B”)	1
4	57944 - (KIT)	HOSE ASSY - 722TC39 16-16OS-16PA9 - (STICK CYLINDER “A”)	1

H200-00310 - DISC SAW/BAR SAW COMBO PIPING - STICK BOOM (W450/W300 VALVE) VALVE TO BOOM

NOTE: HYDRAULIC FITTINGS GET 545 LOCTITE™

NOTE: APPLY GREASE TO O-RINGS

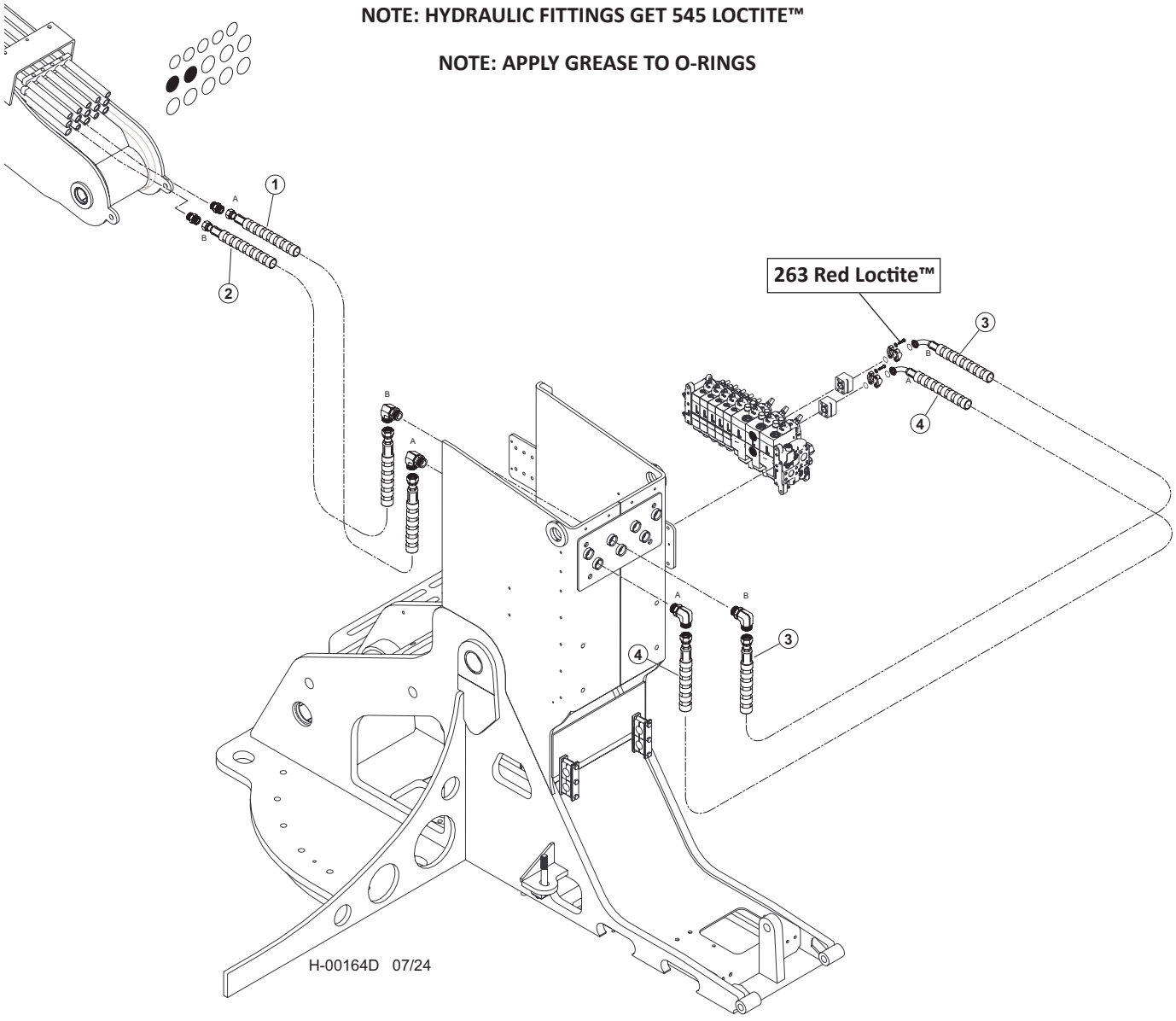

Item	Part #	Description	Qty.
1	65885 - (65896 - KIT)	HOSE, HYD, 787TC40 16-16OS-16OS-SW **("A" PORT - CHIMNEY TO BOOM)**	1
2	65884 - (65896 - KIT)	HOSE, HYD, 787TC39 16-16OS-16OS-SW **("B" PORT - CHIMNEY TO BOOM)**	1
3	65859 - (65856 - KIT)	HOSE, HYD, 787TC36.5 16-16OS-20PH9-SW **("B" PORT - VALVE TO CHIMNEY)**	1
4	65615 - (65856 - KIT)	HOSE, HYD, 787TC36 16-16OS-20PH9-SW **("A" PORT - VALVE TO CHIMNEY)**	1

H100-00720 - DISC SAW/BAR SAW COMBO PIPING - CLAMP (K220/L90 VALVE)
MAIN VALVE TO BOOM

NOTE: HYDRAULIC FITTINGS GET 545 LOCTITE™

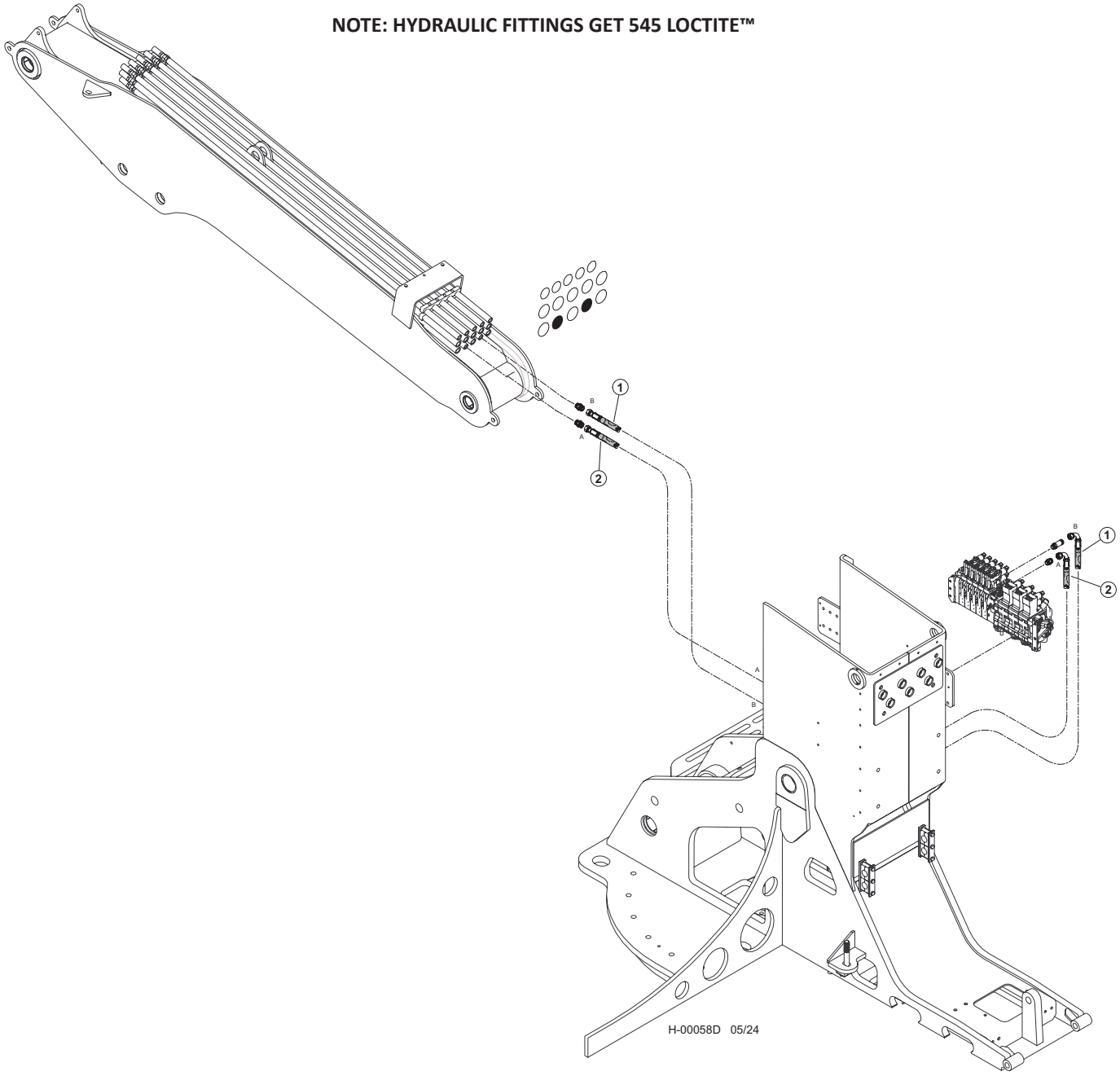

Item	Part #	Description	Qty.
1	57944 - (KIT)	HOSE ASSY - 722TC62 12-12OS-12O9-W - (CLAMP “B”)	1
2	57944 - (KIT)	HOSE ASSY - 722TC64 12-12OS-12O9-W - (CLAMP “A”)	1

H200-00320 - DISC SAW/BAR SAW COMBO PIPING - CLAMP (W450/W300 VALVE)
MAIN VALVE TO BOOM

NOTE: HYDRAULIC FITTINGS GET 545 LOCTITE™

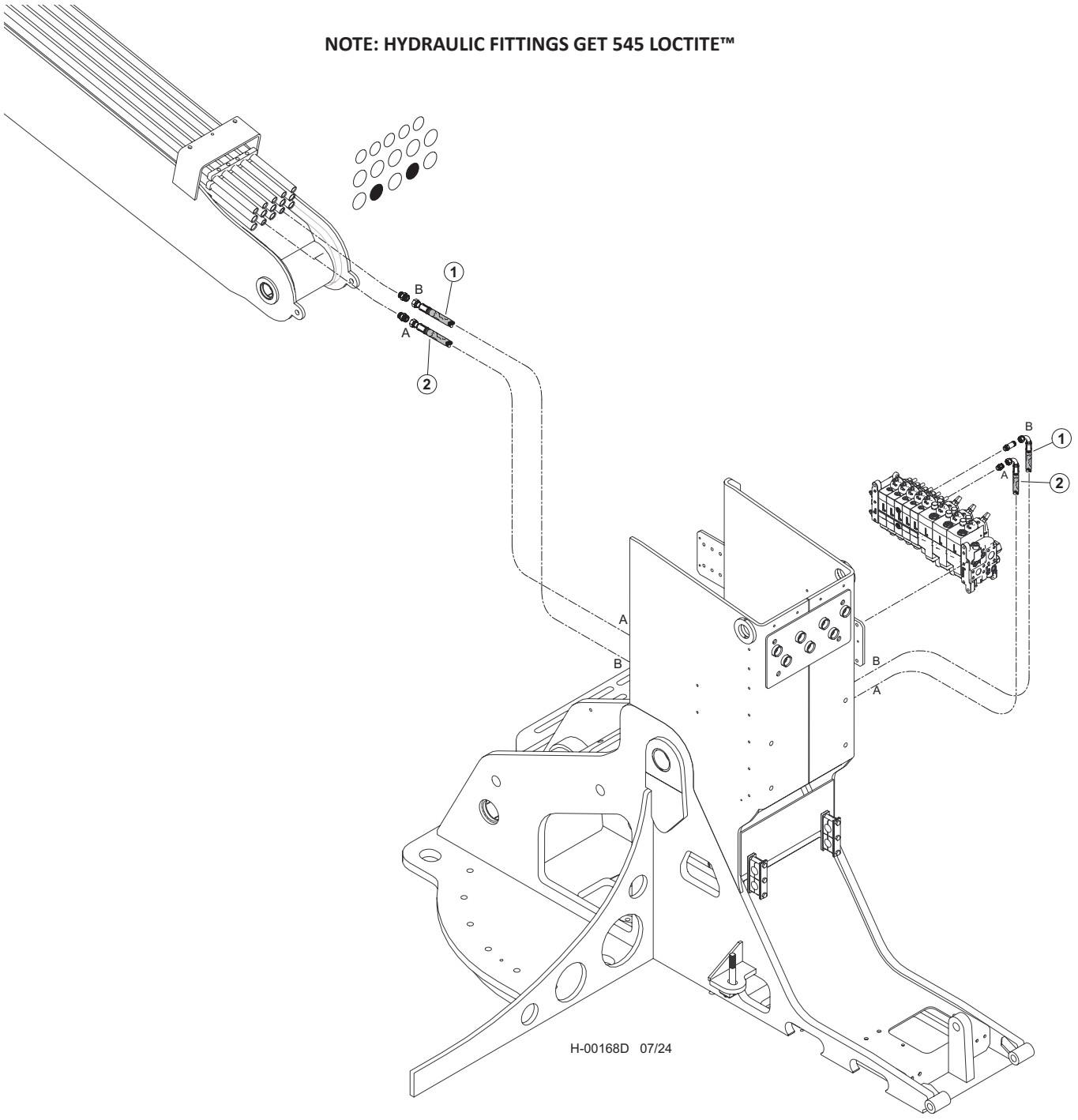

Item	Part #	Description	Qty.
1	65862 - (65856 - KIT)	HOSE, HYD, 722TC70.5 12-12OS-12O4-W **- (CLAMP "B")**	1
2	65862 - (65856 - KIT)	HOSE, HYD, 722TC70.5 12-12OS-12O4-W **- (CLAMP "A")**	1

H100-00730 - DISC SAW/BAR SAW COMBO PIPING - ACCUMULATOR (K220/L90 VALVE) VALVE TO BOOM

NOTE: HYDRAULIC FITTINGS GET 545 LOCTITE™

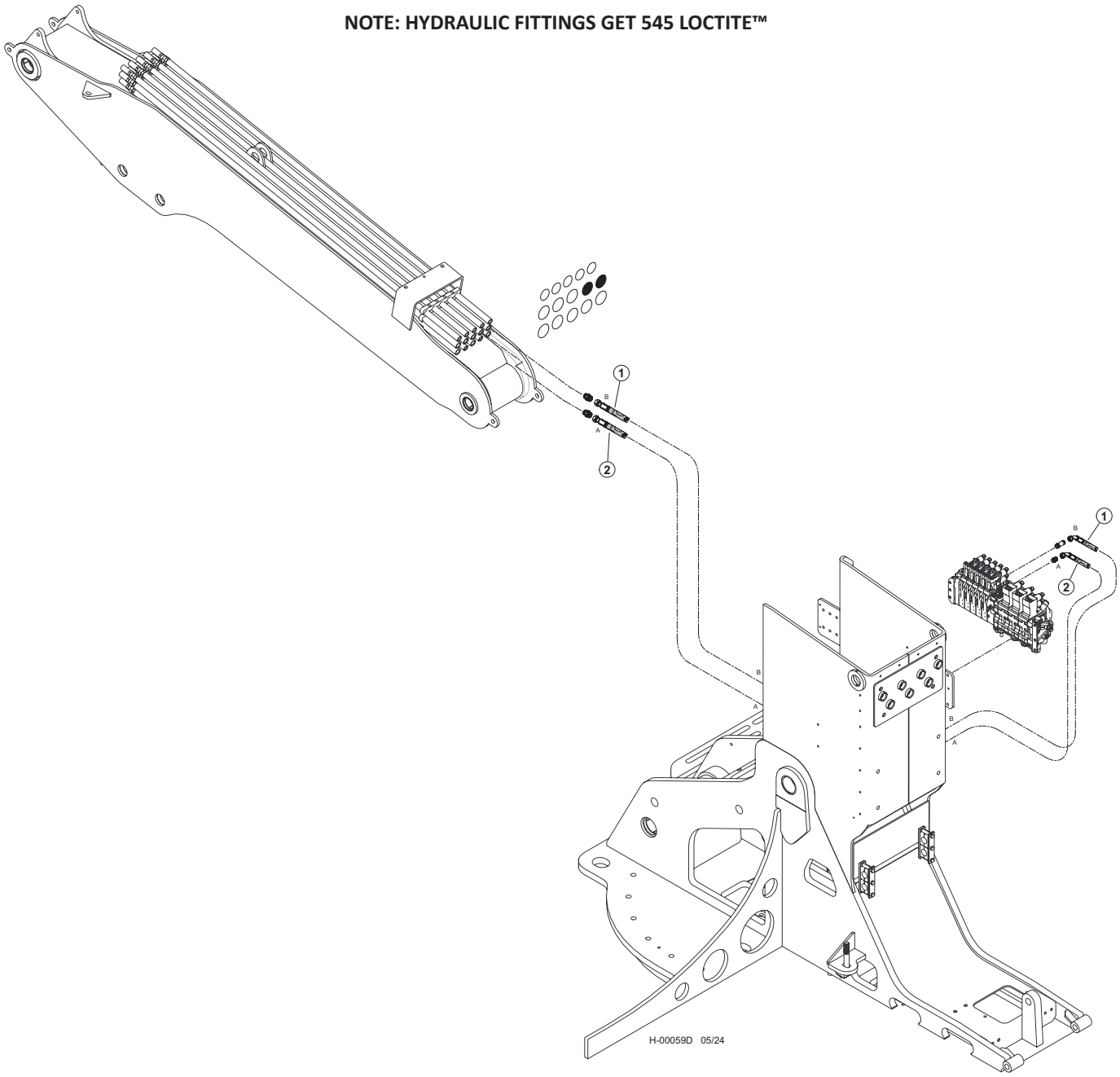

Item	Part #	Description	Qty.
1	57944 - (KIT)	HOSE ASSY - 722TC64 10-10OS-10O4-W - (CLAMP “B”)	1
2	57944 - (KIT)	HOSE ASSY - 722TC63 10-10OS-10O4-W - (CLAMP “A”)	1

H200-00330 - DISC SAW/BAR SAW COMBO PIPING - ACCUMULATOR (W450/W300 VALVE) VALVE TO BOOM

NOTE: HYDRAULIC FITTINGS GET 545 LOCTITE™

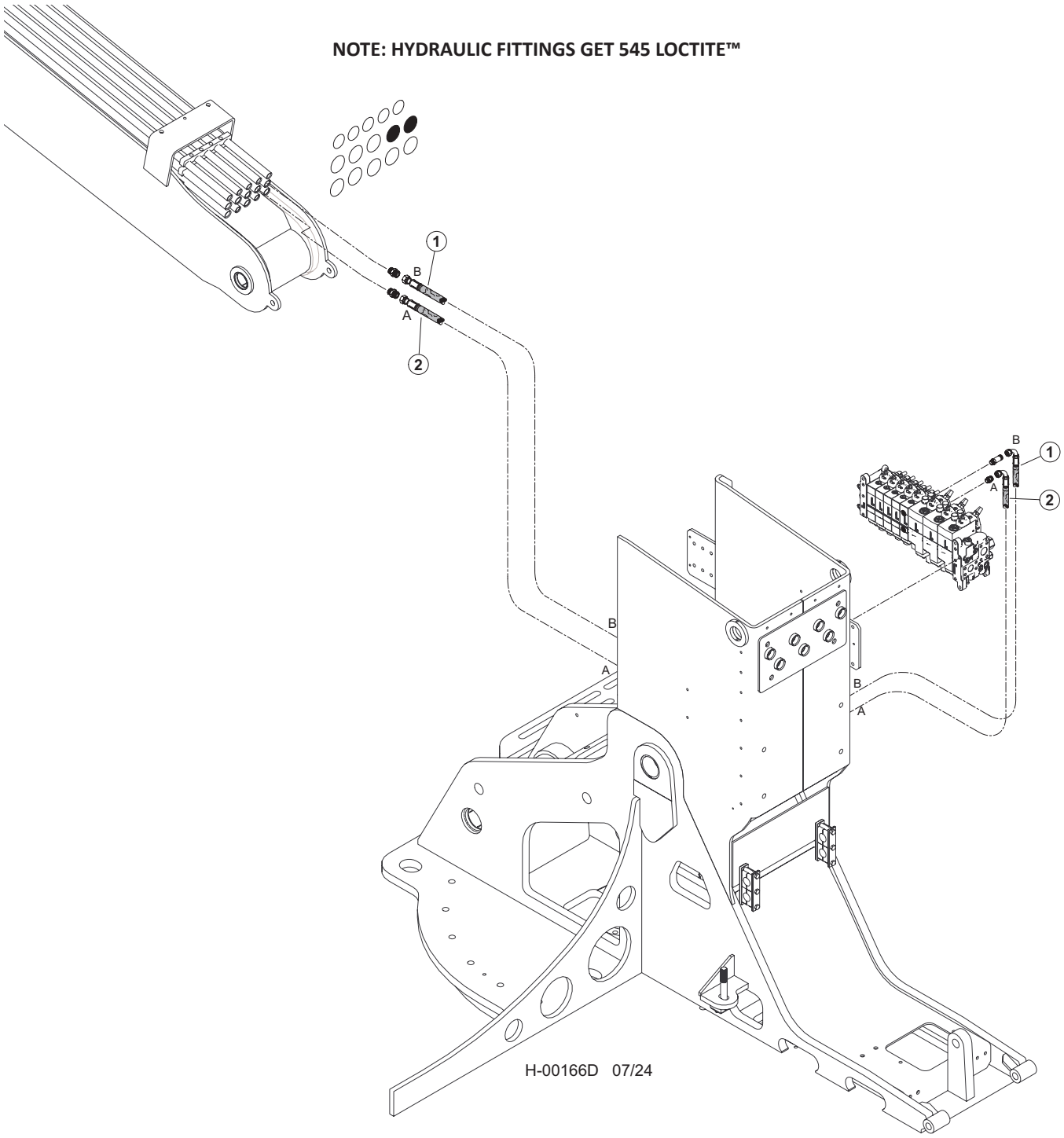

Item	Part #	Description	Qty.
1	65862 - (65856 - KIT)	HOSE, HYD, 722TC70.5 12-12OS-12O4-W - **(ACCUMULATOR "B")**	1
2	65862 - (65856 - KIT)	HOSE, HYD, 722TC70.5 12-12OS-12O4-W - **(ACCUMULATOR "A")**	1

H100-00740 - DISC SAW/BAR SAW COMBO PIPING - LATERAL TILT (K220/L90 VALVE) VALVE TO BOOM

NOTE: HYDRAULIC FITTINGS GET 545 LOCTITE™

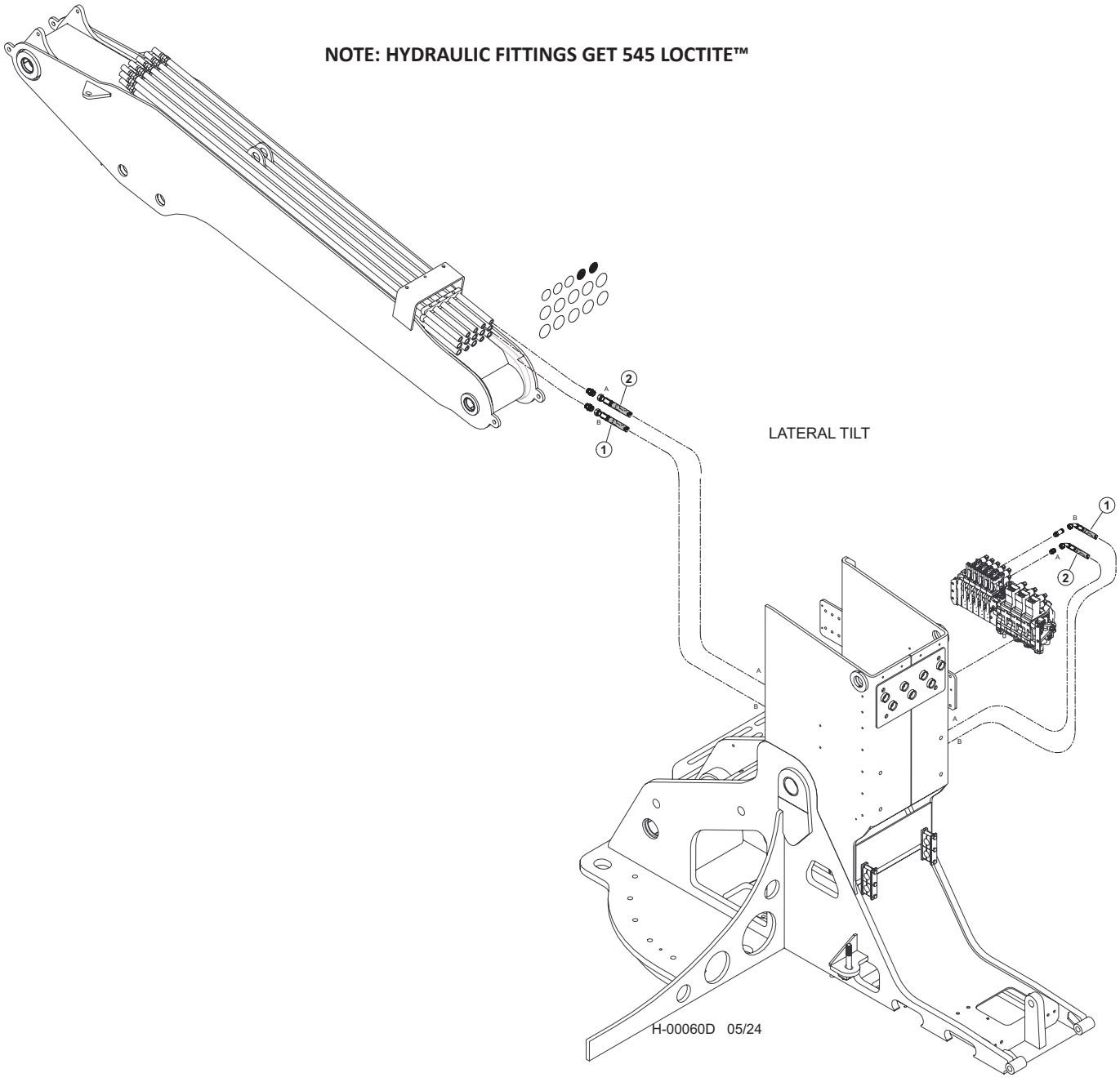

Item	Part #	Description	Qty.
1	57944 - (KIT)	HOSE ASSY - 722TC64 10-10OS-10O4-W - (LATERAL TILT “B”)	1
2	57944 - (KIT)	HOSE ASSY - 722TC63 10-10OS-10O4-W - (LATERAL TILT “A”)	1

H200-00340 - DISC SAW/BAR SAW COMBO PIPING - LATERAL TILT (W450/W300 VALVE) VALVE TO BOOM

NOTE: HYDRAULIC FITTINGS GET 545 LOCTITE™

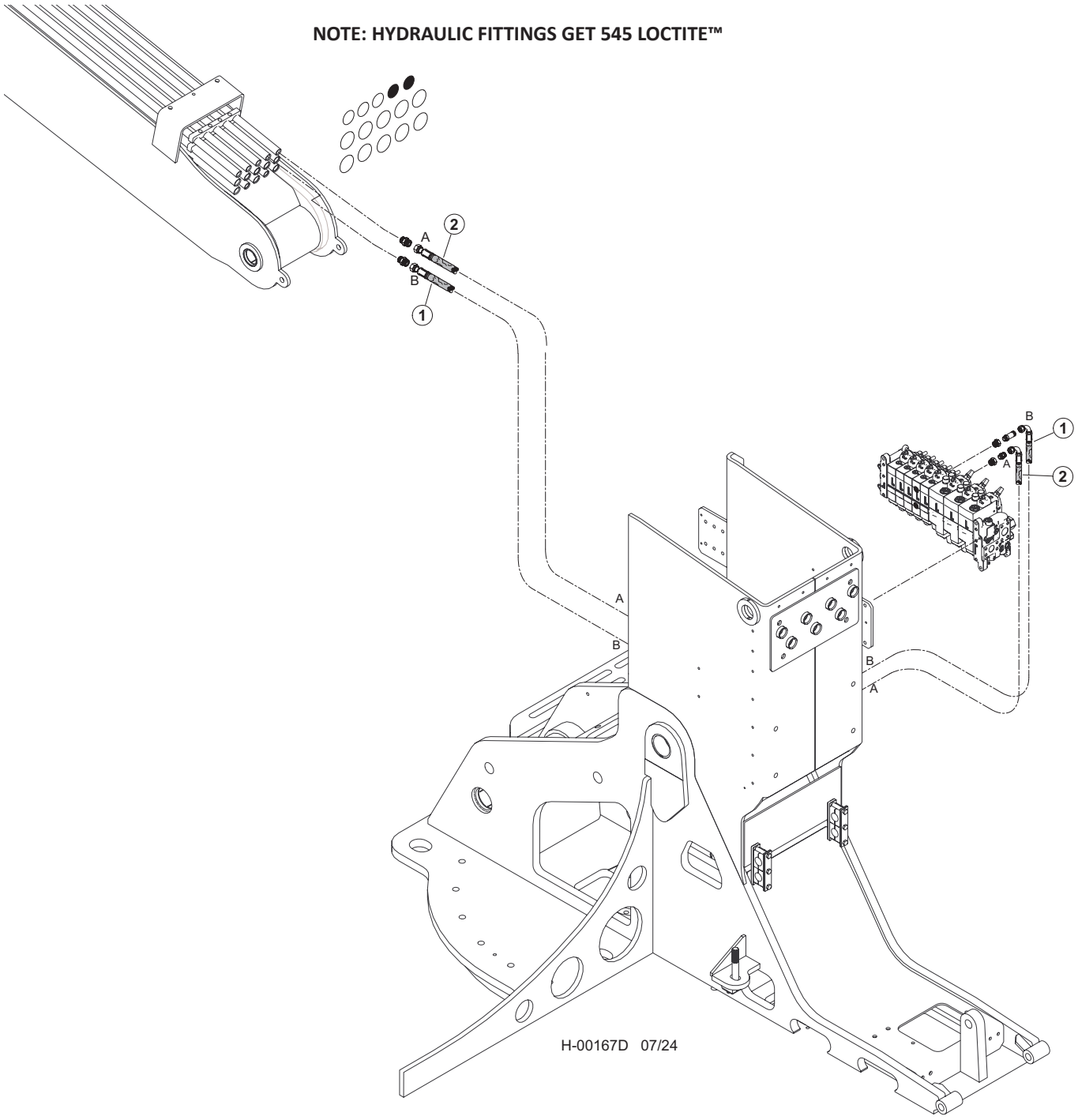

Item	Part #	Description	Qty.
1	65863 - (65856 - KIT)	HOSE, HYD, 722TC65.5 10-10OS-10O4-W - **(LATERAL TILT "B")**	1
2	65863 - (65856 - KIT)	HOSE, HYD, 722TC65.5 10-10OS-10O4-W - **(LATERAL TILT "A")**	1

H100-00750 - DISC SAW/BAR SAW COMBO PIPING - CAB LEVEL (K220/L90 VALVE) VALVE TO BOOM

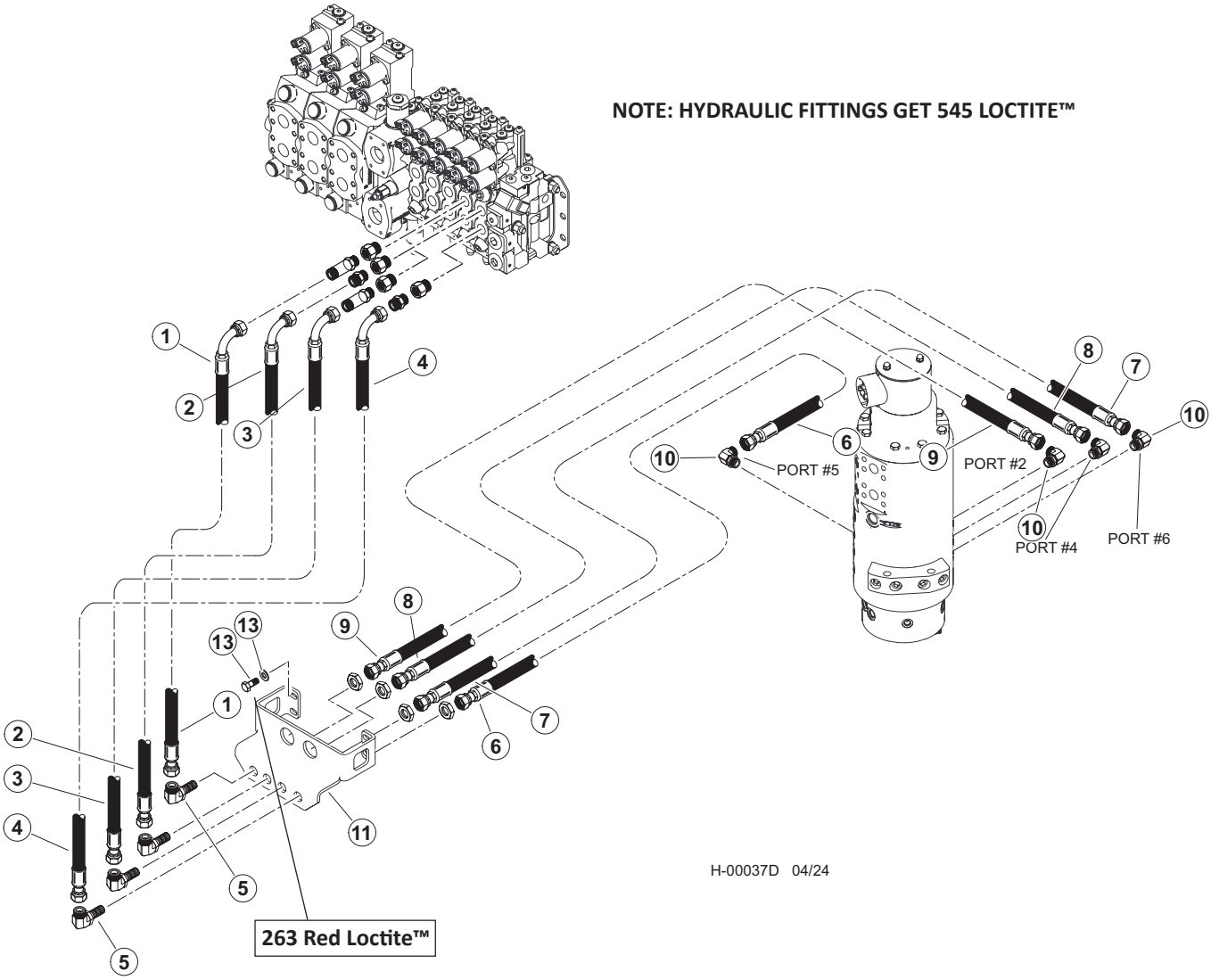

Item	Part #	Description	Qty.
1	57945 - (KIT)	HOSE ASSY - 787TC42 08-08OS-0809 - (VALVE PORT “B” TO BULKHEAD)	1
2	57945 - (KIT)	HOSE ASSY - 787TC42 08-08OS-0809 - (VALVE PORT “B” TO BULKHEAD)	1
3	57945 - (KIT)	HOSE ASSY - 787TC39 08-08OS-0809 - (VALVE PORT “A” TO BULKHEAD)	1
4	57945 - (KIT)	HOSE ASSY - 787TC39 08-08OS-0809 - (VALVE PORT “A” TO BULKHEAD)	1
	57947	KIT, FITTING TRACK LEVEL-D SERIES	1
5	24187	ELBOW, 90 BULKHEAD - 855BH-TT-08	4
6	57945 - (KIT)	HOSE ASSY - 787TC30 08-08OS-080S - (BULKHEAD TO PORT #5 ON ROT MAN)	1
7	57945 - (KIT)	HOSE ASSY - 787TC40 08-08OS-080S - (BULKHEAD TO PORT #6 ON ROT MAN)	1
8	57945 - (KIT)	HOSE ASSY - 787TC41.5 08-08OS-080S - (BULKHEAD TO PORT #4 ON ROT MAN)	1
9	57945 - (KIT)	HOSE ASSY - 787TC44 08-08OS-080S - (BULKHEAD TO PORT #2 ON ROT MAN)	1
10	16360	ELBOW, 90 - FF1868T-0808S	4
11	60559	BULHEAD, FRONT - TM	1
12	15542	BOLT - .375” X .75”	2
13	15528	WASHER, SAE FLAT - .375” OR 3/8” **263 RED LOCTITE™**	2

H200-00350 - DISC SAW/BAR SAW COMBO PIPING - CAB LEVEL (W450/W300 VALVE) VALVE TO BOOM

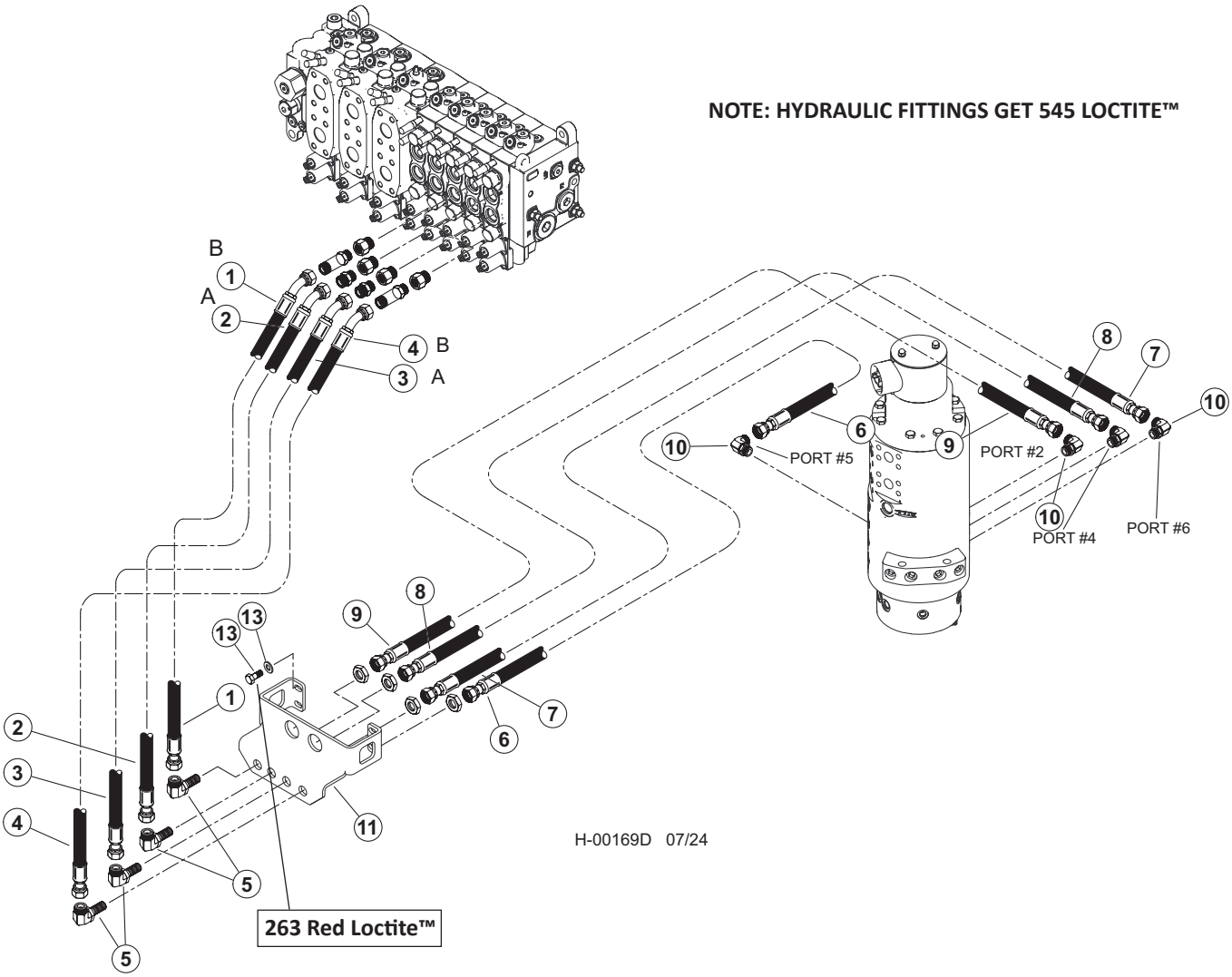

Item	Part #	Description	Qty.
1	65621 - (65619 - KIT)	HOSE, HYD, 787TC45 08-08OS-08O9 - **(VALVE PORT "B" TO BULKHEAD)**	1
2	65621 - (65619 - KIT)	HOSE, HYD, 787TC45 08-08OS-08O9 - **(VALVE PORT "B" TO BULKHEAD)**	1
3	65620 - (65619 - KIT)	HOSE, HYD, 787TC40.5 08-08OS-08O9 - **(VALVE PORT "A" TO BULKHEAD)**	1
4	65620 - (65619 - KIT)	HOSE, HYD, 787TC40.5 08-08OS-08O9 - **(VALVE PORT "A" TO BULKHEAD)**	1
	57947	KIT, FITTING TRACK LEVEL-D SERIES	1
5	24187	ELBOW, 90 BULKHEAD - 855BH-TT-08	4
6	65892 - (65891 - KIT)	HOSE ASSY - 787TC30 08-08OS-080S - **(BULKHEAD TO PORT #5 ON ROT MAN)**	1
7	65952 - (65891 - KIT)	HOSE ASSY - 787TC40 08-08OS-080S - **(BULKHEAD TO PORT #6 ON ROT MAN)**	1
8	65894 - (65891 - KIT)	HOSE ASSY - 787TC41.5 08-08OS-080S - **(BULKHEAD TO PORT #4 ON ROT MAN)**	1
9	65895 - (65891 - KIT)	HOSE ASSY - 787TC44 08-08OS-080S - **(BULKHEAD TO PORT #2 ON ROT MAN)**	1
10	16360	ELBOW, 90 - FF1868T-0808S	4
11	60559	BULHEAD, FRONT - TM	1
12	15542	BOLT - .375" X .75"	2
13	15528	WASHER, SAE FLAT - .375" OR 3/8" **263 RED LOCTITE™**	2

H100-00760 - DISC SAW/BAR SAW COMBO PIPING - MAIN BOOM CYLINDER (BULKHEAD FITTING TO CYLINDER)

NOTE: HYDRAULIC FITTINGS GET 545 LOCTITE™

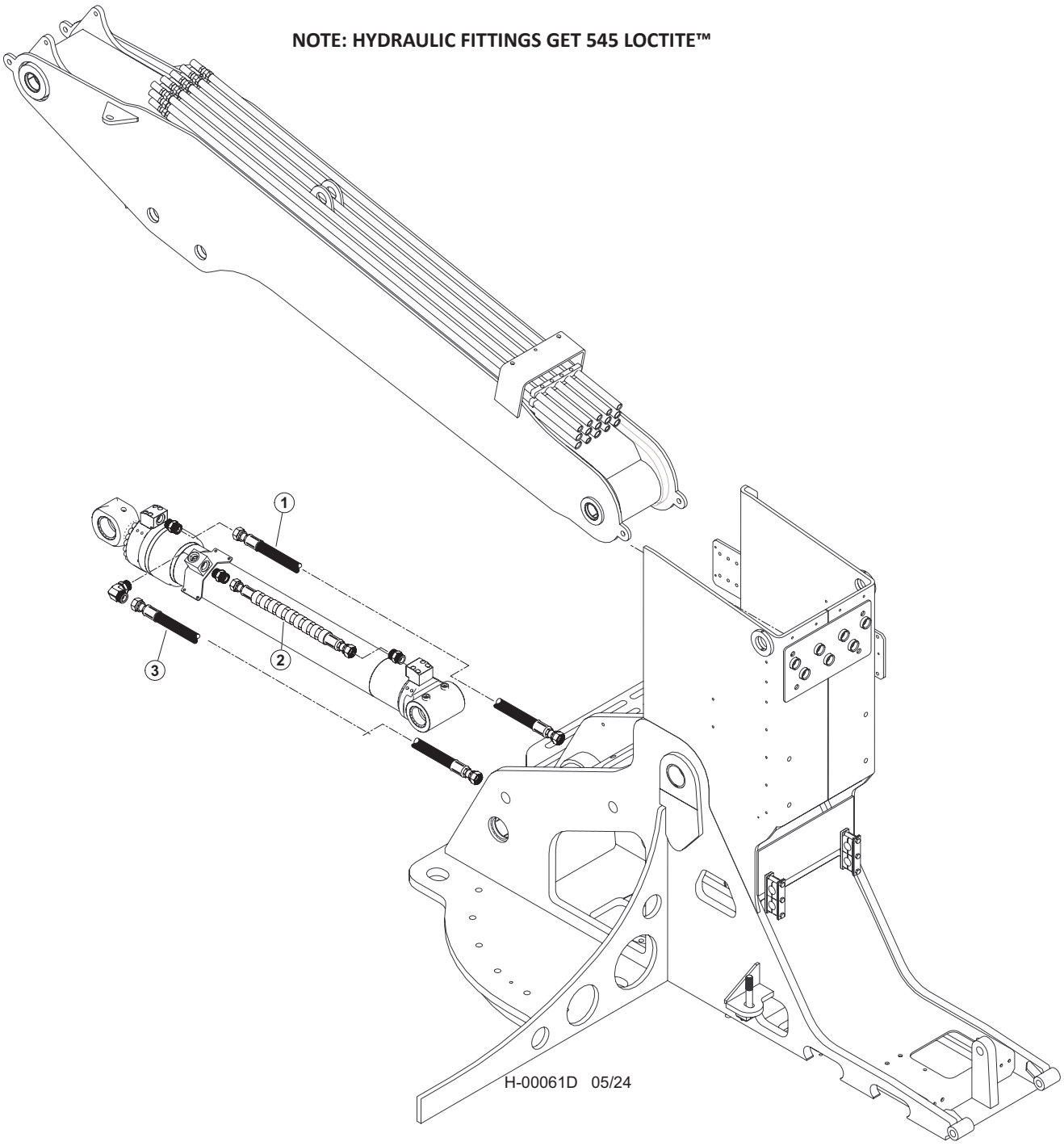

Item	Part #	Description	Qty.
1	57944 - (KIT)	HOSE ASSY - 722TC70 16-16OS-16OS - (ROD END OF BOOM CYLINDER)	1
2	57944 - (KIT)	HOSE ASSY - 722TC45.5 16-16OS-16OS-SW - (BASE END OF BOOM CYLINDER TO BLOCK)	1
3	57944 - (KIT)	HOSE ASSY - 722TC60 16-16OS-16OS - (BASE END OF BOOM CYLINDER)	1

H100-00770 - DISC SAW/BAR SAW COMBO PIPING - SAW (K220/L90 VALVE) BULKHEAD FITTING TO CYLINDER

NOTE: HYDRAULIC FITTINGS GET 545 LOCTITE™

NOTE: APPLY GREASE TO O-RINGS

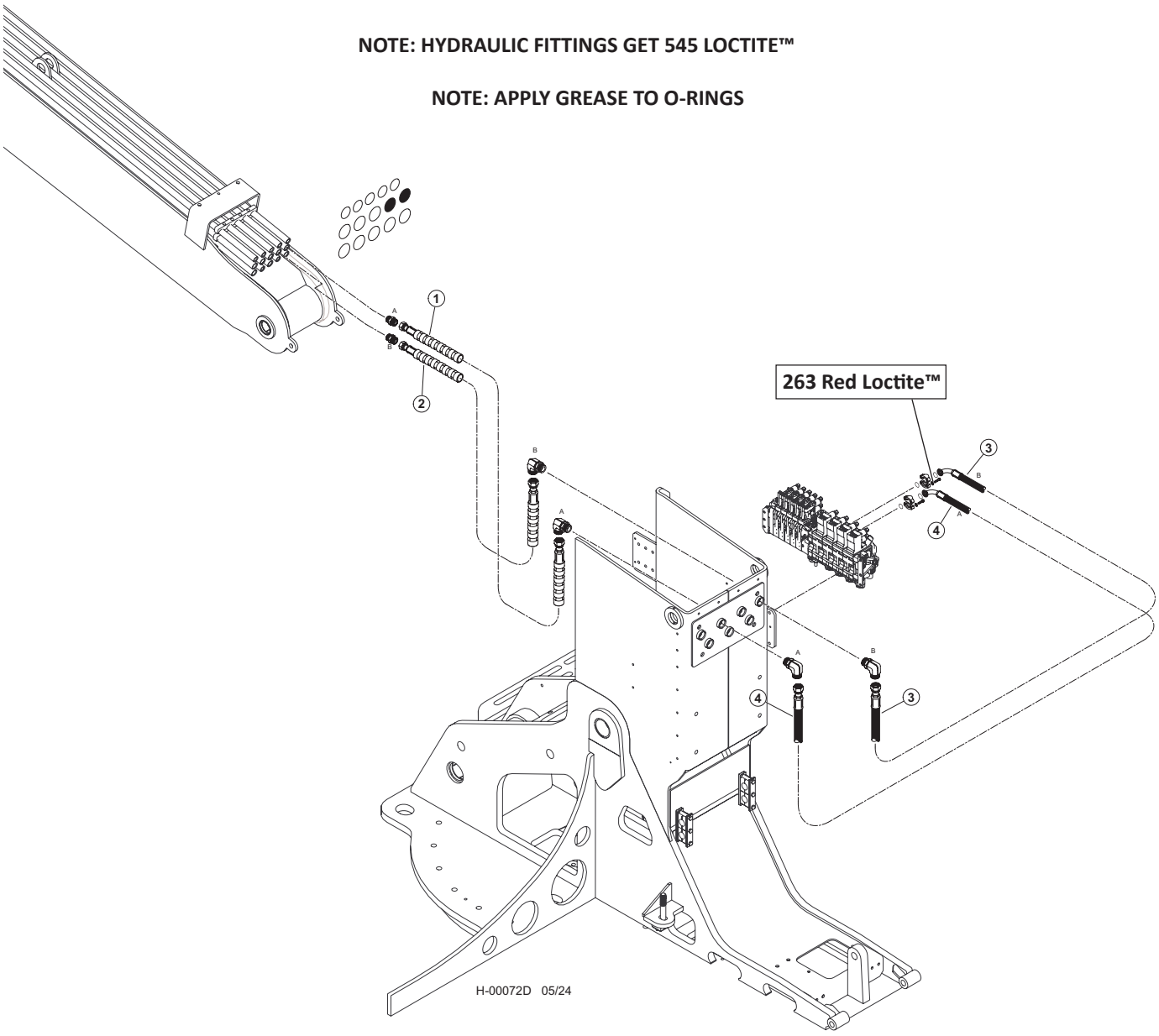

Item	Part #	Description	Qty.
1	57944 - (KIT)	HOSE ASSY - 722TC40 16-16OS-16OS-SW - (SAW “A”)	1
2	57944 - (KIT)	HOSE ASSY - 722TC39 16-16OS-16OS-SW - (SAW “B”)	1
3	57944 - (KIT)	HOSE ASSY - 722TC33 16-16OS-16O9 - (SAW “B”)	1
4	57944 - (KIT)	HOSE ASSY - 722TC36 16-16OS-1609 - (SAW “A”)	1

H200-00350 - DISC SAW/BAR SAW COMBO PIPING - SAW (W450/W300 VALVE) BULKHEAD FITTING TO CYLINDER

NOTE: HYDRAULIC FITTINGS GET 545 LOCTITE™

NOTE: APPLY GREASE TO O-RINGS

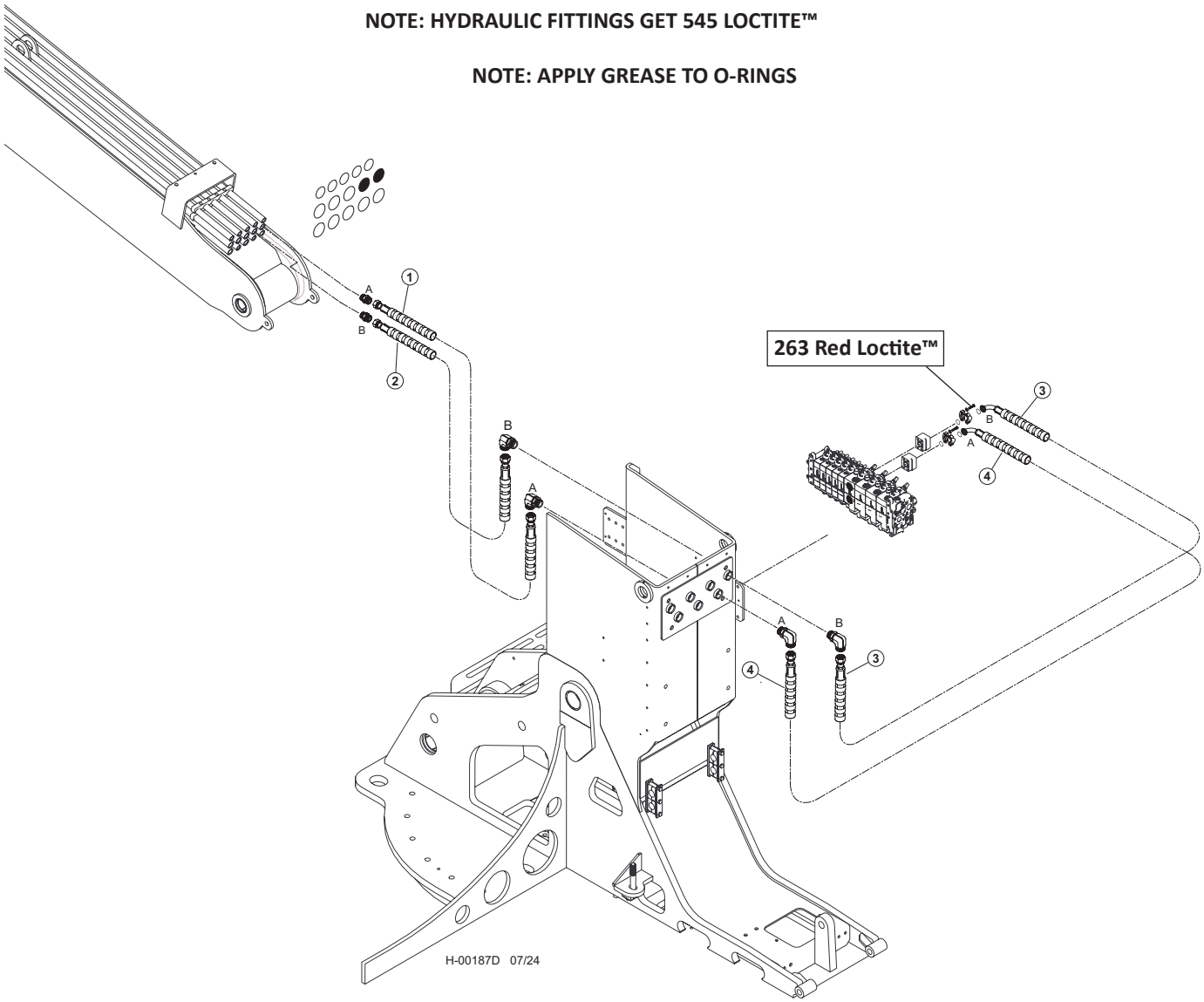

Item	Part #	Description	Qty.
1	65884	HOSE, HYD, 787TC39 16-16OS-16OS-SW - **(SAW "A")**	1
2	65885	HOSE, HYD, 787TC40 16-16OS-16OS-SW - **(SAW "B")**	1
3	65640 - (65864 - KIT)	HOSE, HYD, 787TC46 16-16OS-20PH4-SW - **(SAW "B")**	1
4	65639 - (65864 - KIT)	HOSE, HYD, 787TC48.5 16-16OS-20PH4-SW - **(SAW "A")**	1

H100-00780 - DISC SAW/BAR SAW COMBO PIPING - TOOL TILT (MAIN BOOM TO CYLINDER)

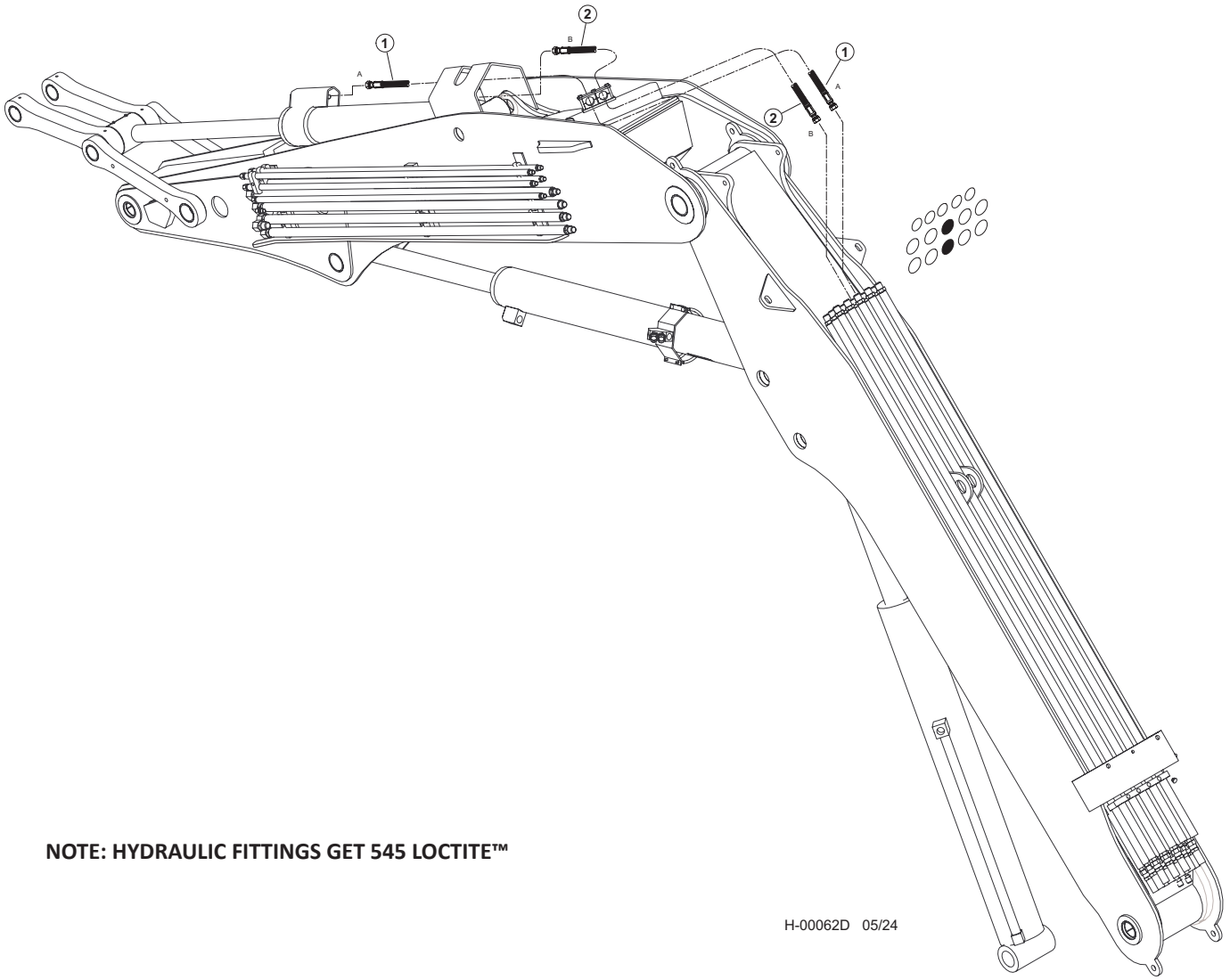

NOTE: HYDRAULIC FITTINGS GET 545 LOCTITE™

H-00062D 05/24

Item	Part #	Description	Qty.
1	65846 - (65837 - (KIT)	HOSE, HYD, 787TC160 16-16OS-16OS - (TOOL CYLINDER “A”)	1
2	65847 - (65837 - (KIT)	HOSE, HYD, 787TC108 16-16OS-16OS - (TOOL CYLINDER “B”)	1

H100-00790 - DISC SAW/BAR SAW COMBO PIPING - STICK BOOM (MAIN BOOM TO STICK CYLINDER)

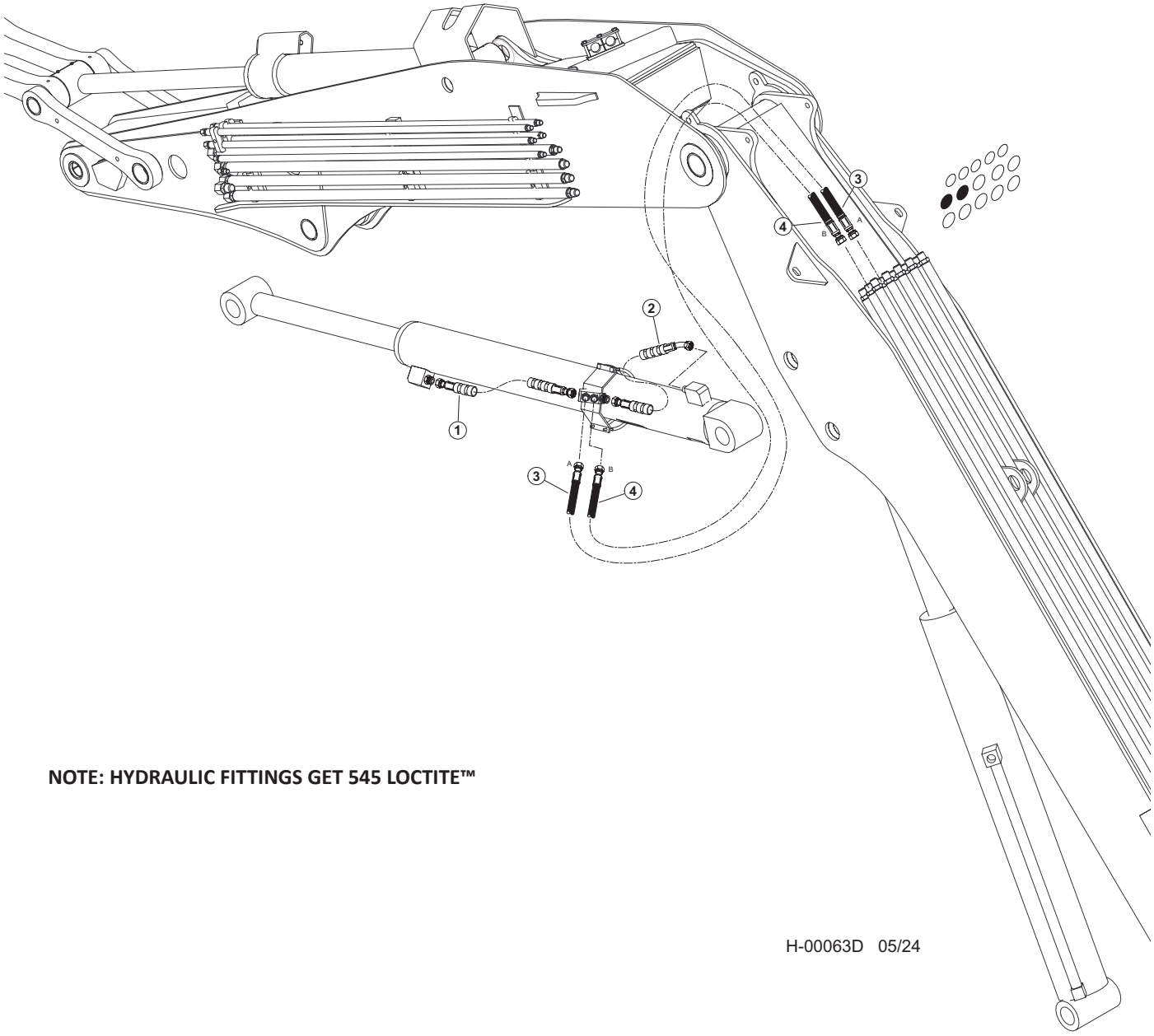

NOTE: HYDRAULIC FITTINGS GET 545 LOCTITE™

Item	Part #	Description	Qty.
1	65855	HOSE, HYD, 787TC38 16-16OS-16OS-SW - (STICK CYLINDER ROD)	1
2	65853	HOSE, HYD, 787TC17 16-16OS-16O4-SW - (STICK CYLINDER BASE)	1
3	65848 - (65837 - KIT)	HOSE, HYD, 787TC79 16-16OS-16OS - (STICK CYLINDER ROD - “A”)	1
4	65849 - (65837 - KIT)	HOSE, HYD, 787TC81 16-16OS-16OS - (STICK CYLINDER BASE - “B”)	1

H100-00800 - DISC SAW/BAR SAW COMBO PIPING - SAW (MAIN BOOM TO STICK BOOM)

NOTE: HYDRAULIC FITTINGS GET 545 LOCTITE™

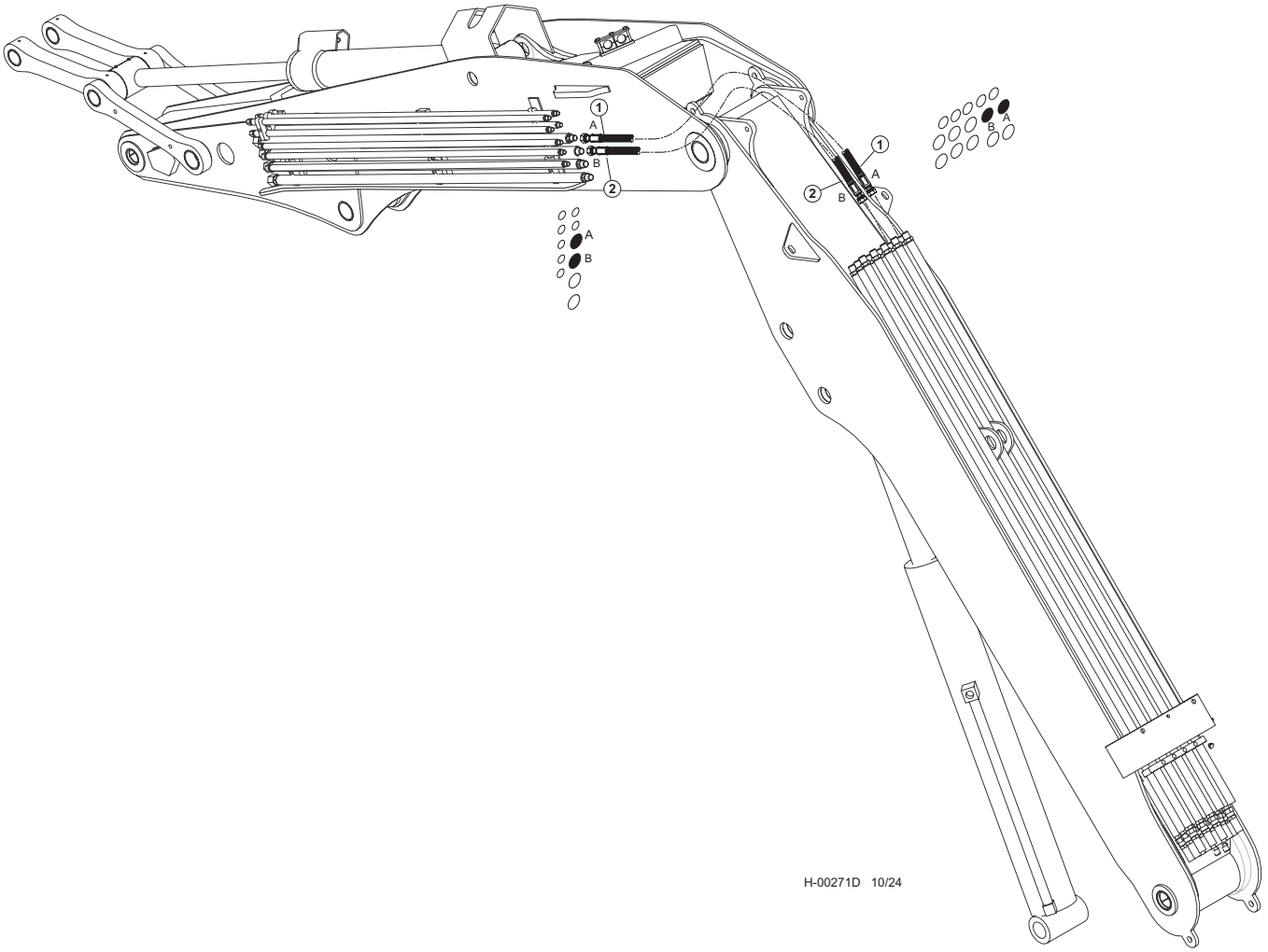

Item	Part #	Description	Qty.
1	65239 - (KIT 65896)	HOSE, HYD, 787TC76 16-16OS-16OS-SW - **(STICK CYLINDER ROD - "A")**	1
2	65239 - (KIT 65896)	HOSE, HYD, 787TC76 16-16OS-16OS-SW - **(STICK CYLINDER BASE - "B")**	1

H100-00810 - DISC SAW/BAR SAW COMBO PIPING - CLAMP (MAIN BOOM TO STICK BOOM)

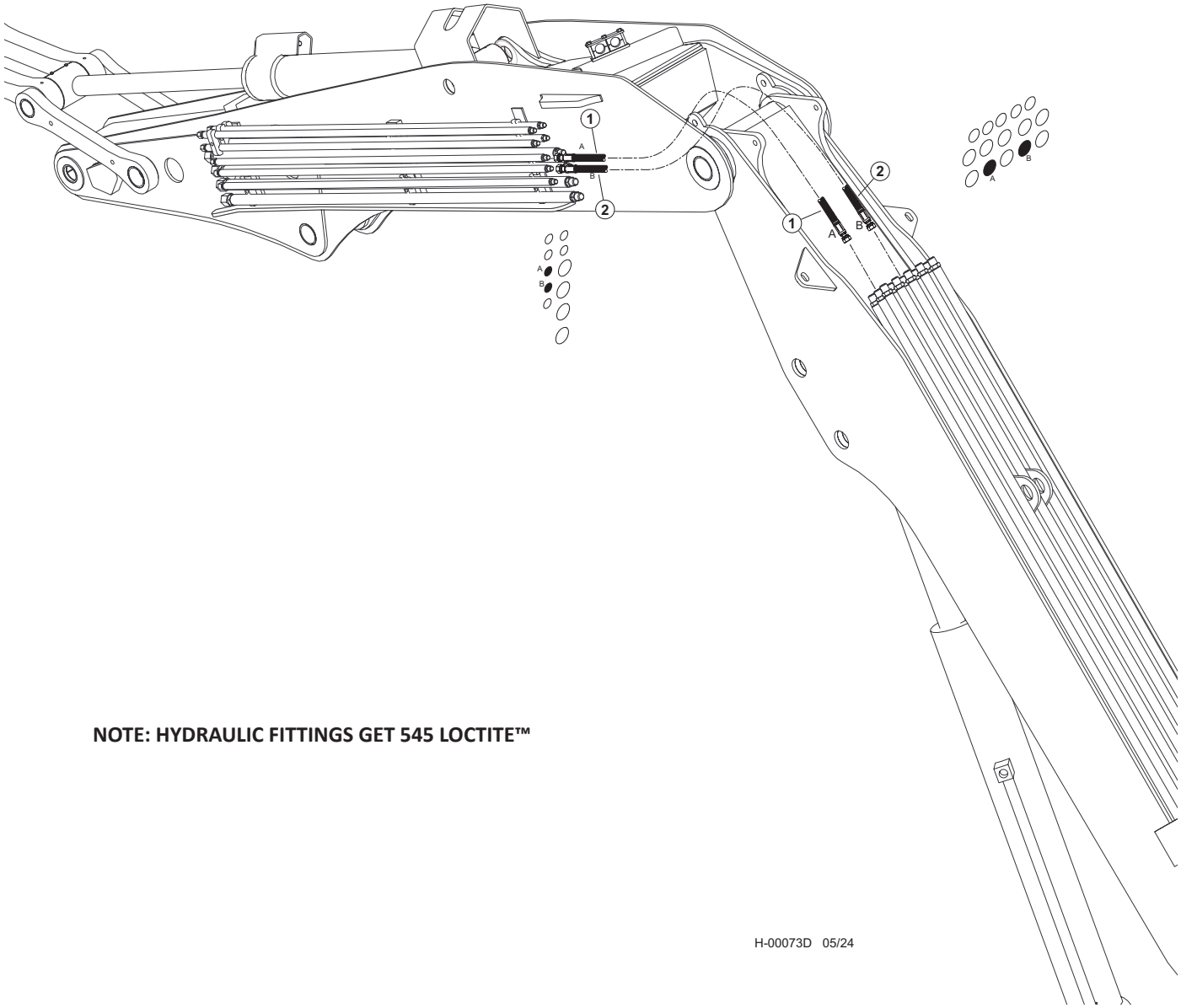

NOTE: HYDRAULIC FITTINGS GET 545 LOCTITE™

Item	Part #	Description	Qty.
1	65844 - (KIT 65837)	HOSE ASSY - 722TC72 12-12OS-12OS - (CLAMP “A”)	1
2	65845 - (KIT 65837)	HOSE ASSY - 722TC76 12-12OS-12OS - (CLAMP “B”)	1

H100-00820 - DISC SAW/BAR SAW COMBO PIPING - ACCUMULATOR (MAIN BOOM TO STICK BOOM)

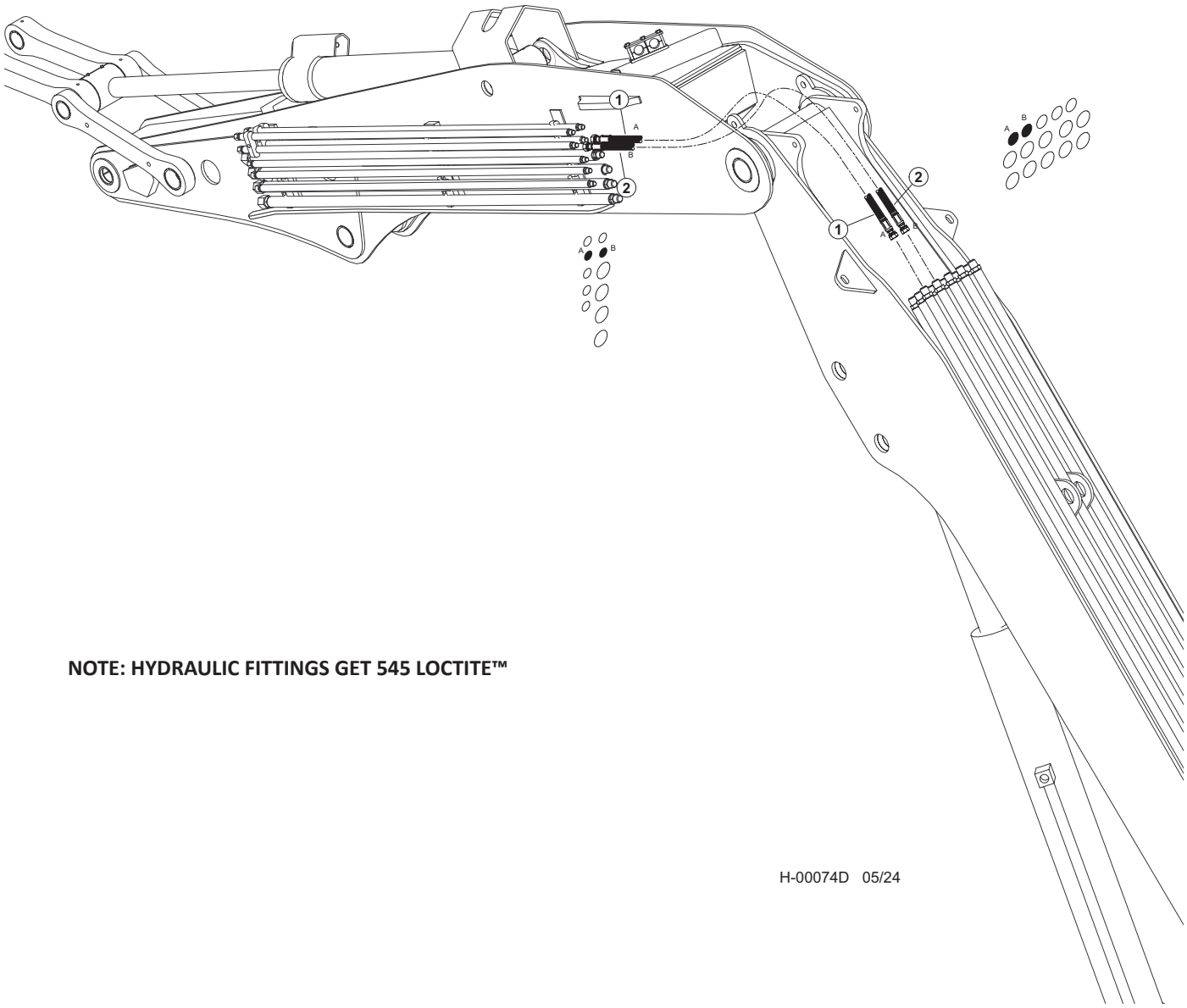

NOTE: HYDRAULIC FITTINGS GET 545 LOCTITE™

H-00074D 05/24

Item	Part #	Description	Qty.
1	65841 - (KIT 65837)	HOSE, HYD, 722TC80.5 10-10OS-10OS - (ACCUMULATOR - “A”)	1
2	65841 - (KIT 65837)	HOSE, HYD, 722TC80.5 10-10OS-10OS - (ACCUMULATOR - “B”)	1

H100-00830 - DISC SAW/BAR SAW COMBO PIPING - LATERAL TILT (MAIN BOOM TO STICK BOOM)

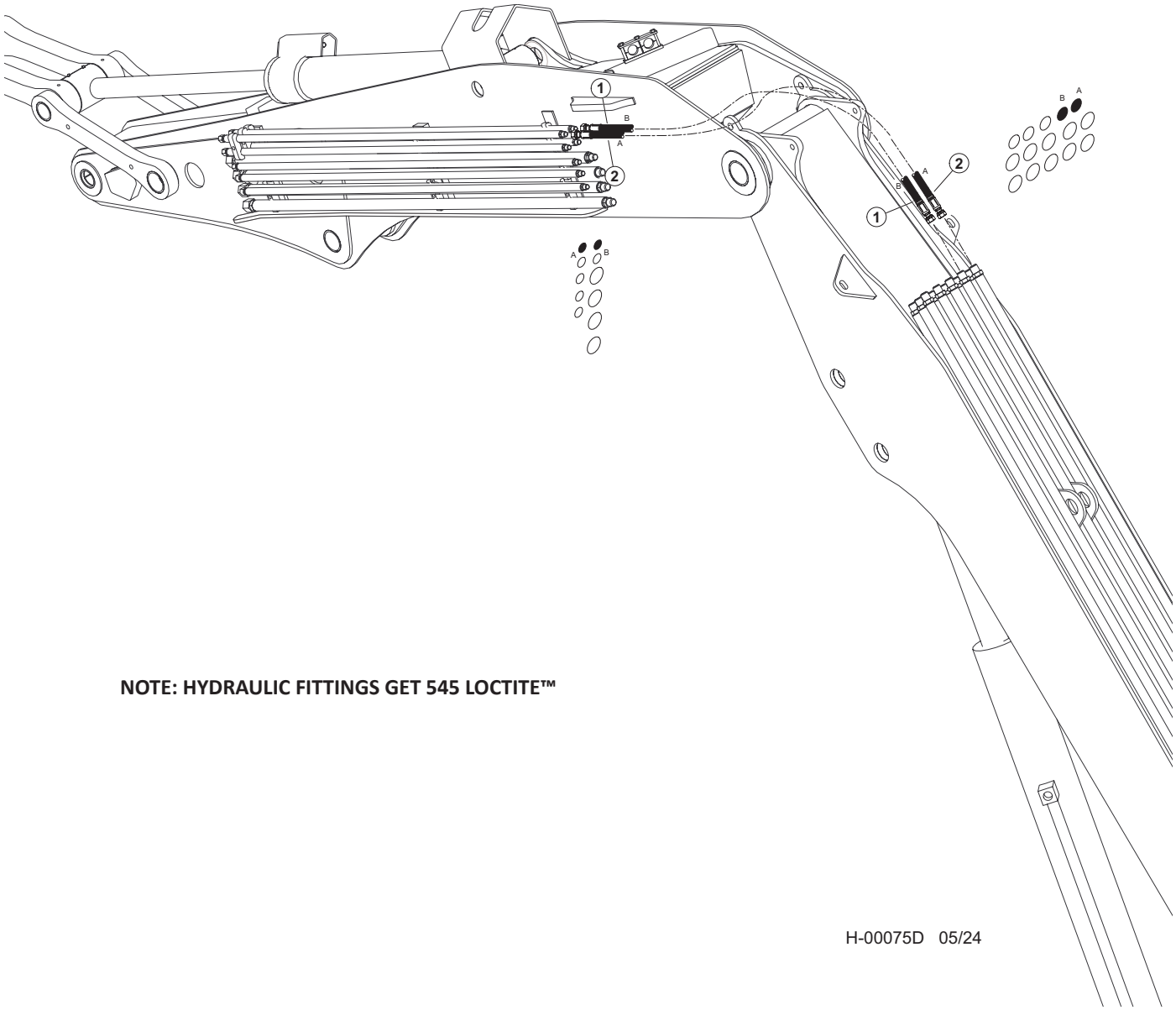

NOTE: HYDRAULIC FITTINGS GET 545 LOCTITE™

Item	Part #	Description	Qty.
1	65841 - (KIT 65837)	HOSE, HYD, 722TC82.5 10-10OS-10OS - (LATERAL TILT - "B")	1
2	65841 - (KIT 65837)	HOSE, HYD, 722TC82.5 10-10OS-10OS - (LATERAL TILT - "A")	1

H100-00840 - DISC SAW/BAR SAW COMBO PIPING - PRESSURE & RETURN (MAIN BOOM TO STICK BOOM)

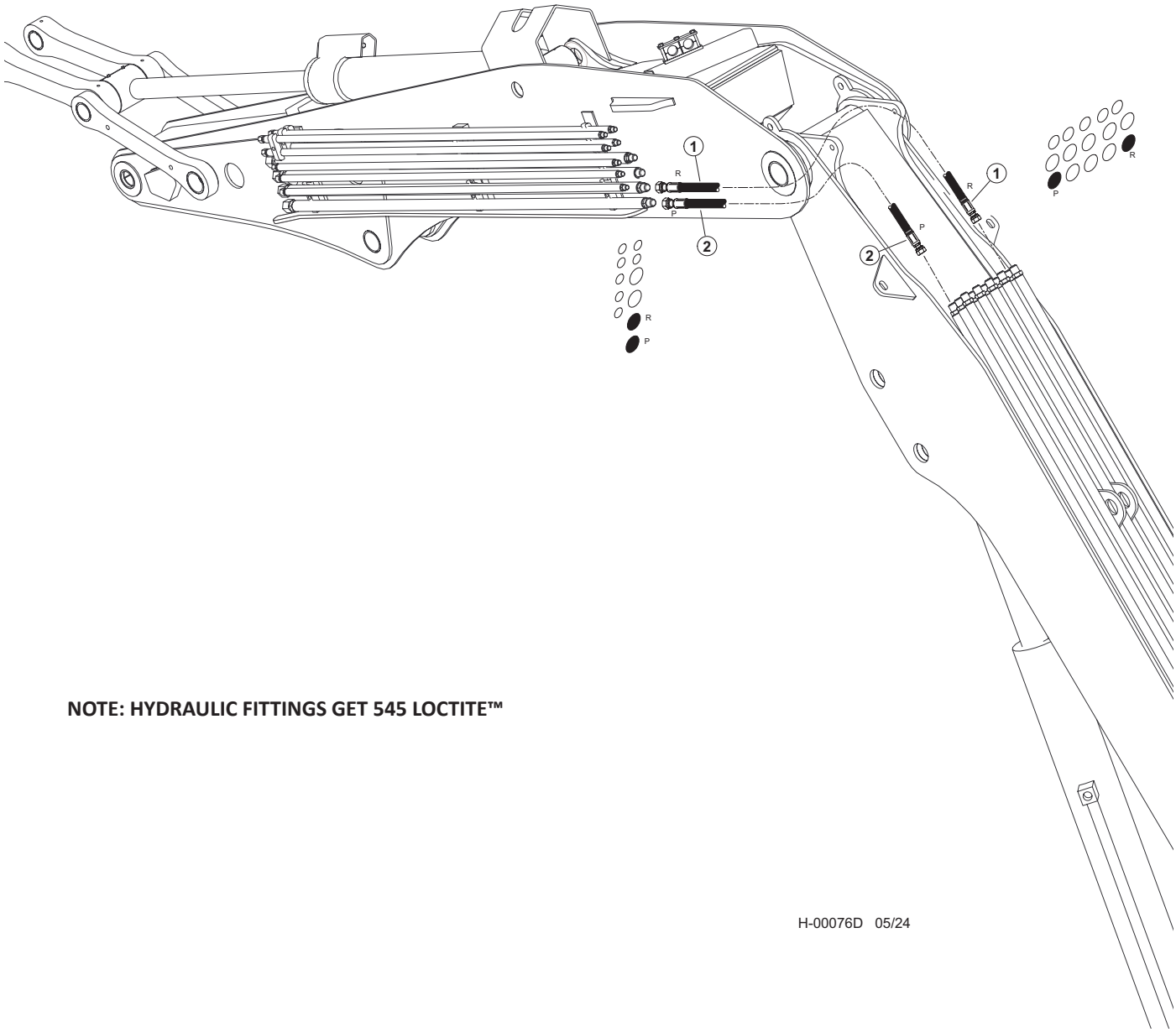

NOTE: HYDRAULIC FITTINGS GET 545 LOCTITE™

Item	Part #	Description	Qty.
1	65851 - (KIT 65837)	HOSE, HYD, 722TC77 16-16OS-16OS - (RETURN - “B”)	1
2	65802 - (KIT 65837)	HOSE, HYD, 787TC70 16-16OS-16OS - (PRESSURE - “A”)	1

H100-00850 - DISC SAW/BAR SAW COMBO PIPING - CASE DRAIN (MAIN BOOM TO STICK BOOM)

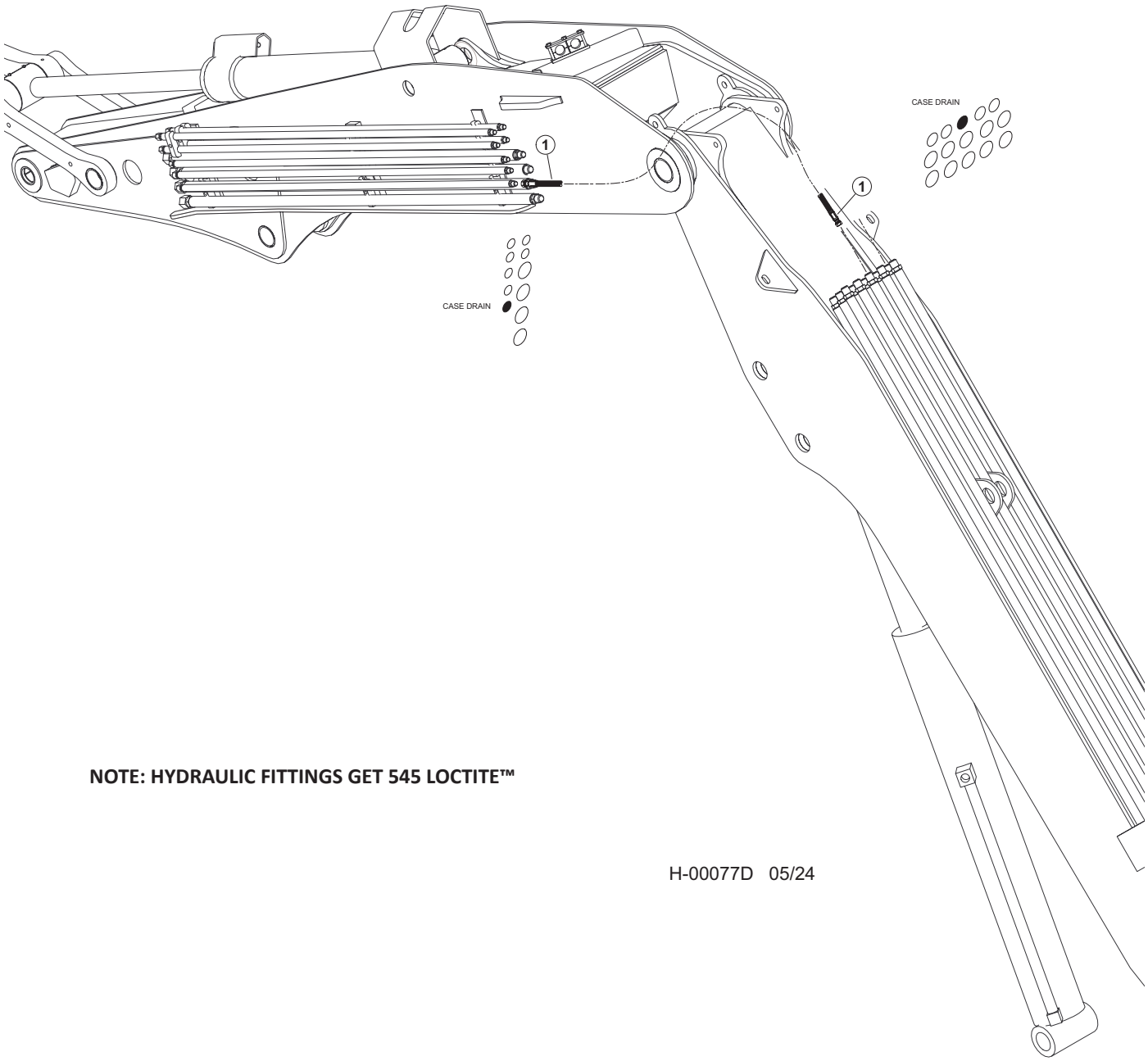

NOTE: HYDRAULIC FITTINGS GET 545 LOCTITE™

H-00077D 05/24

Item	Part #	Description	Qty.
1	65839 - (KIT 65837)	HOSE, HYD, 722TC79.5 08-08OS-08OS - (CASE DRAIN)	1

H100-00860 - DISC SAW/BAR SAW COMBO PIPING - LIGHT WIRE (MAIN BOOM TO STICK BOOM)

NOTE: All HYDRAULIC FITTINGS GET (545 LOCTITE™)

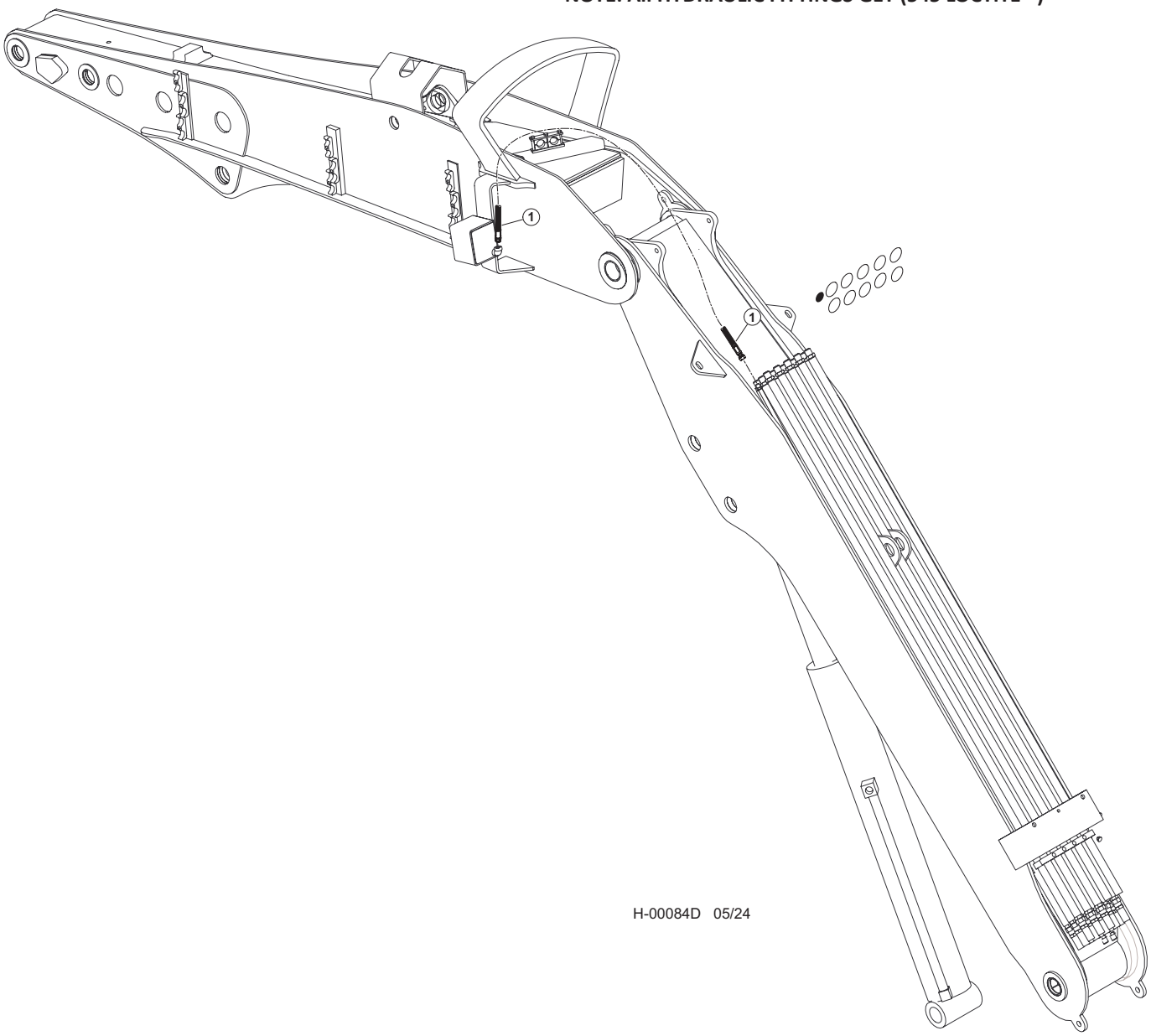

Item	Part #	Description	Qty.
1	65838 - (KIT 65837)	HOSE, HYD, 387TC84 06-06OS-08PS - (LIGHT WIRE)	1

H100-00870 - DISC SAW/BAR SAW COMBO PIPING - GREASE HOSES (MAIN BOOM TO STICK BOOM)

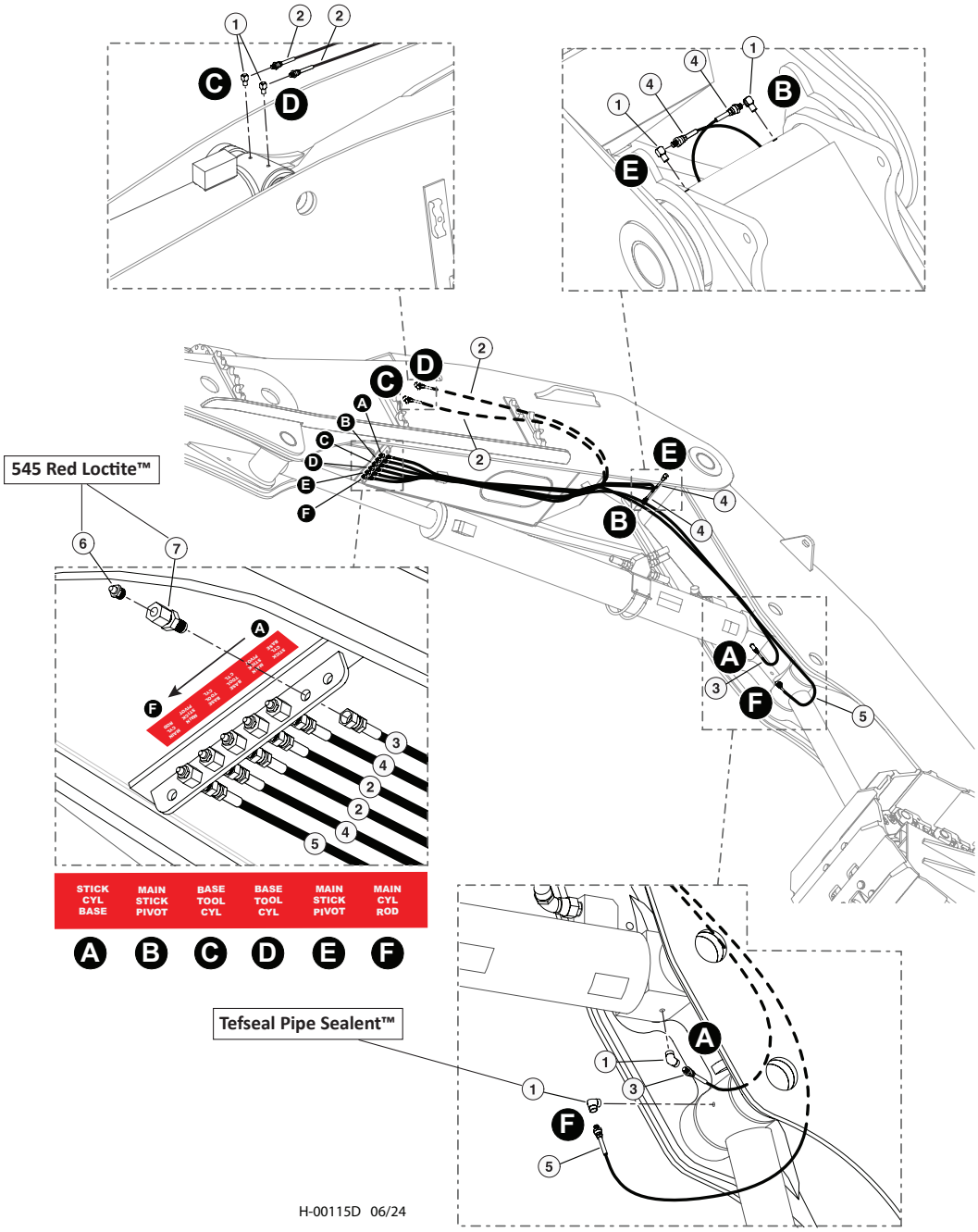

Item	Part #	Description	Qty.
1	22281	FITTING, 90° - 5546132 **TEFSEAL PIPE SEALANT™**	4
2	55605 - (KIT)	HOSE ASSY - 2133-02-02PS-04JS (TOOL CYL BASE)	2
3	55605 - (KIT)	HOSE ASSY - 2138-02-02PS-04JS (STICK CYL BASE)	1
4	55605 - (KIT)	HOSE ASSY - 2188-02-02PS-04JS (MAIN/STICK PIVOT)	2
5	55605 - (KIT)	HOSE ASSY - 2147-02-02PS-04JS (MAIN CYL ROD)	1
6	15658	CONNECTOR, STRAIGHT BULKHEAD - 2239-2-4S **545 RED LOCTITE™**	6
7	10704	FITTING, STRAIGHT GREASE - 1/8" PIPE THREAD **545 RED LOCTITE™**	6

T-2239800 - ARM ASSEMBLY, FB, HD, U - (TANGUAY HD)

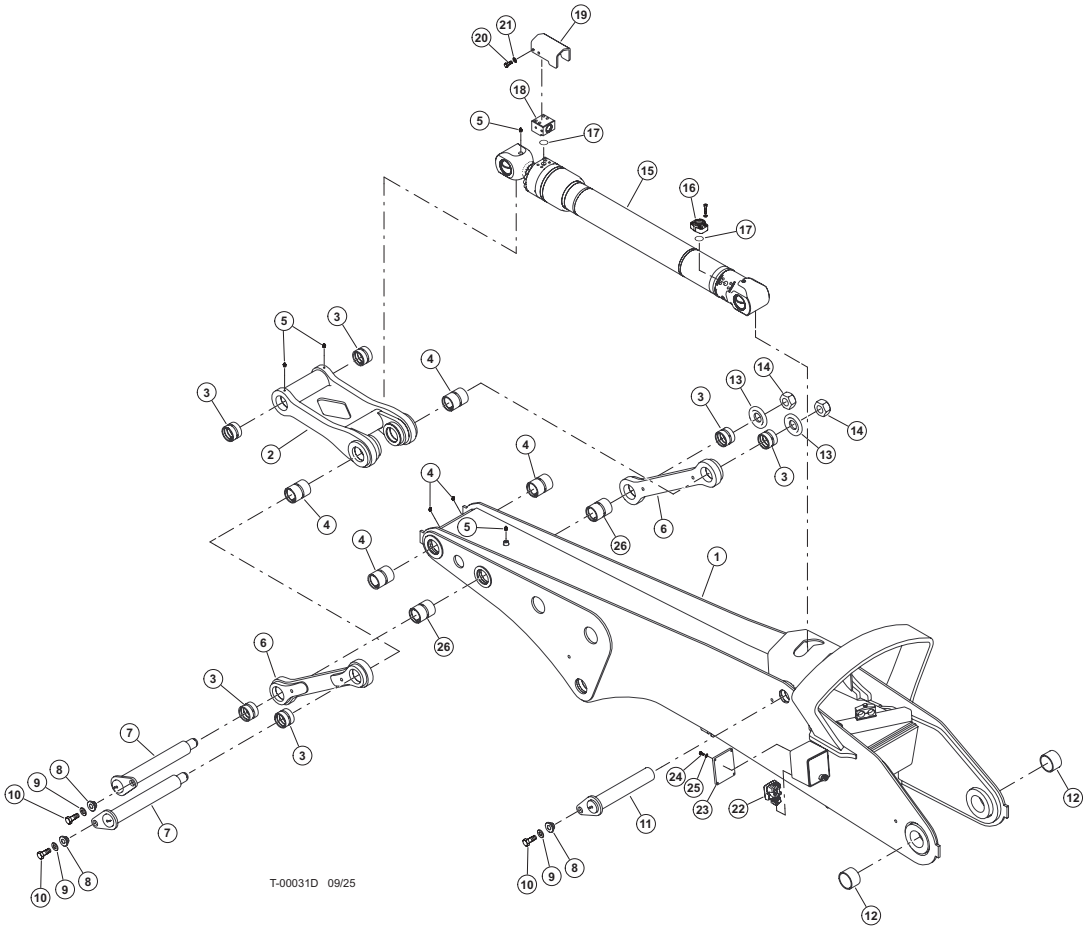

Item	Part #	Description	Qty.
1	58116	WELDMENT, STICK BOOM HD (TANGUAY)	1
2	487650	WELDMENT, LINK BOOM TO TOOL CYL-TAIL	1
3	48303	BUSHING, 3.5 X 3.0X 2.5	6
4	484250	BUSHING, 3.5 X 3.0 X 4.5	6
5	59122	ZERK, GREASE - 1/8-27 NPTF, ST	4
6	62580	DOG BONE-POWER STICK	2
7	48310	3.0 X 20.00 PIN ASSY	2
8	18570	WASHER, PIN RETAINING	3
9	15550	WASHER, SAE FLAT - .75”	3
10	15549	BOLT - .75” X 2.0	3
11	60683	PIN, TOOL TILT CYLINDER HD	1
12	18565	BUSHING - 3.5” X 2.5”	2
13	12021	WASHER, BURNED	2
14	10728	NUT, NYLON LOCK	2
15	58101	CYLINDER, TOOL TILT - T755 WC	1
16	18397 - (KIT - 59052)	CONNECTOR, FLANGE PAD - W48-16-16U(C 62)	1
17	15377	O-RING - 1” SF (CODE 61/62)	2
18	58231	MANIFOLD, PORT BLOCK - TOOL TILT CYL.	1
19	58232	GUARD, PORT BLOCK TOOL TILT CYL	1
20	10783	BOLT - .5” X 1”	4
21	15534	WASHER, SAE FLAT - .5”	4
22	50999	LIGHT, BOOM MOUNTED - LED LAMPS	1
23	53081	LEXAN, BOOM LIGHT COVER	1
24	15576	BOLT - .25” X 1.00”	4
25	10757	WASHER, SAE FLAT - .25”	4
26	690040	BUSHING, 3.5”X3.0”X 4.5”	2

H101-0010 - PIPING, W/E U. (DISC/BASIC - TANGUAY HD)

NOTE: HYDRAULIC FITTINGS GET 545 LOCTITE™

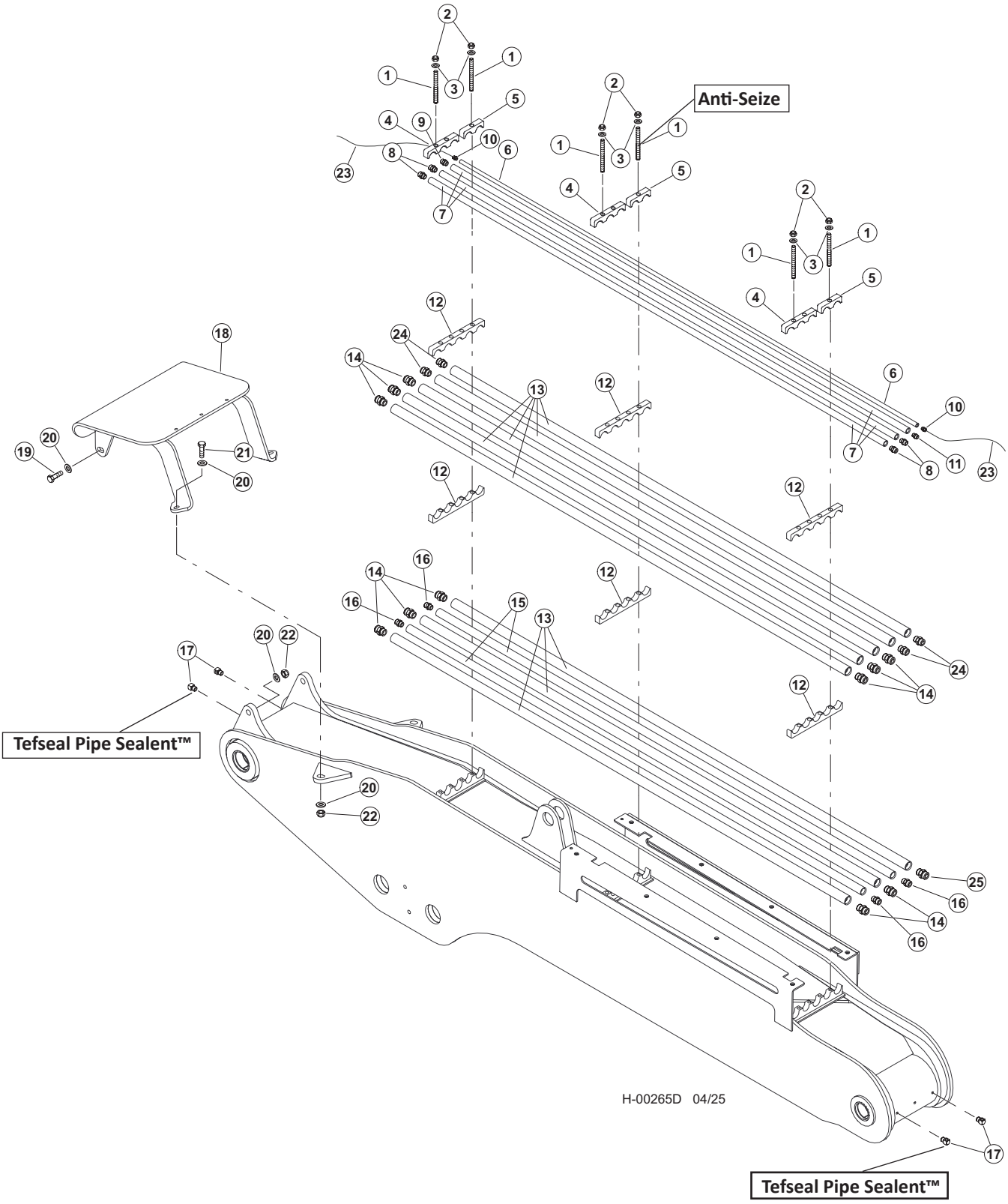

H101-0010 - PIPING, W/E U. (DISC/BASIC - TANGUAY HD)

Item	Part #	Description	Qty.
1	17062	STUD - .625” X 8”	9
2	15563	NUT, NYLOCK - .625”	9
3	10771	WASHER, SAE FLAT - .625”	9
4	85086	CLAMP, SADDLE TOP TUBE - 1”/1”/1”	3
5	54181	CLAMP, SADDLE TOP TUBE - 3/8”P (1 TUBE)	3
6	53116	TUBELINE - .3/8” X 108” - BLACK PIPE	1
7	51815	TUBELINE - .5” X 108”	3
8	51880 (KIT - 57398)	CONNECTOR, STR - (10-8 F50L0-S)	4
9	15117 (KIT - 57398)	CONNECTOR, STR - FF1852T-0808S	1
10	51878 (KIT - 57398)	CONNECTOR, STR - MALE PIPE (6-6 FLO-S)	2
11	16913 (KIT - 57398)	CONNECTOR, STR - FF1852T-1208S	1
12	52155	CLAMP, SADDLE - DRILLED (5-1” TUBES)	6
13	51833	TUBELINE - 1” X 108” FB MAIN	8
14	15225 (KIT - 57398)	CONNECTOR, STR - FF1852T-1616S	11
15	51834	TUBELINE - .75” X 108” FB MAIN	2
16	15152 (KIT - 57398)	CONNECTOR, STR - FF1852T-1212S	4
17	22281	ELBOW, 1/8-27 NPTF(M), 1/8-17 NPTF(F),90	4
18	53927	GUARD, HOSE - MAIN BOOM (FB)(53919 BOOM)	1
19	10840	BOLT - .75” X 3”	2
20	10806	WASHER, 3/4” USS TRU-TORQ	8
21	58398	BOLT - .75” X 2.75”	2
22	10817	NUT, 3/4-10 UNC	4
23	58380	CABLE	30’
24	52866 (KIT - 57398)	CONNECTOR, STR - 10-16 F50LO-S	4
25	17063 (KIT - 57398)	CONNECTOR, STR - FF1852T-2016S	1

H101-0020 - PIPING, W/E U. (DISC/BASIC) HD

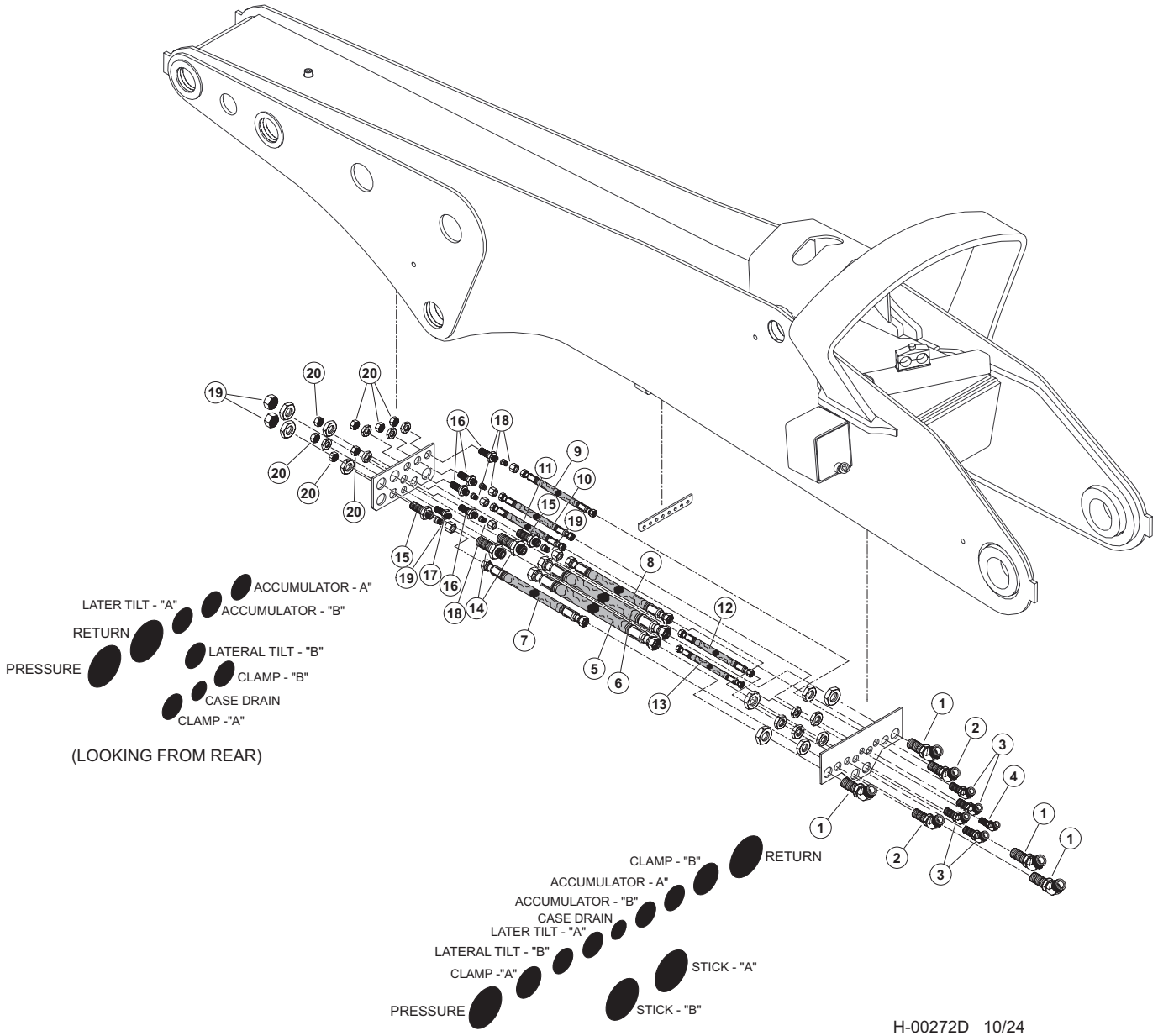

H101-0020 - PIPING, W/E U. (DISC/BASIC) HD

Item	Part #	Description	Qty.
1	54316 - (KIT - 59052)	ELBOW, BULKHEAD UNION 45DEG #16	4
2	55509 - (KIT - 59052)	FITTING, BULKHEAD UNION - 45 DEGREE #12	2
3	55508 - (KIT - 59052)	FITTING, BULKHEAD ELBOW - 45 DEGREE #10	4
4	55507 - (KIT - 59052)	FITTING, BULKHEAD ELBOW - 45 DEGREE - #8	1
5	66427 - (KIT - 663760)	HOSE, HYD, 787TC91 16-16OS-16OS-W - (PRESSURE)	1
6	66428 - (KIT - 663760)	HOSE, HYD, 722TC91 16-16OS-16OS-W - (RETURN)	1
7	66431 - (KIT - 663760)	HOSE, HYD, 722TC91.5 12-12OS-12OS-W - (CLAMP - “A”)	1
8	66431 - (KIT - 663760)	HOSE, HYD, 722TC91.5 12-12OS-12OS-W - (CLAMP - “B”)	1
9	66432 - (KIT - 663760)	HOSE, HYD, 722TC91 10-10OS-10OS-W - (ACCUMULATOR - “A”)	1
10	66432 - (KIT - 663760)	HOSE, HYD, 722TC91 10-10OS-10OS-W - (ACCUMULATOR - “B”)	1
11	66432 - (KIT - 663760)	HOSE, HYD, 722TC91 10-10OS-10OS-W - (LATERAL TILT - “A”)	1
12	66432 - (KIT - 663760)	HOSE, HYD, 722TC91 10-10OS-10OS-W - (LATERAL TILT - “B”)	1
13	66426 - (KIT - 663760)	HOSE, HYD, 722TC68 08-08OS-08OS-W- (CASE DRAIN)	1
14	20033 - (KIT - 59052)	CONNECTOR, STR BULKHEAD - 832-TT-16	2
15	19754 - (KIT - 59052)	CONNECTOR, STR BULKHEAD - 12 WLO-WLNL-S	2
16	50037 - (KIT - 59052)	CONNECTOR, STR BULKHEAD - 832-TT-10	4
17	20196 - (KIT - 59052)	CONNECTOR, STR BULKHEAD - FF1994T-0808S	1
18	57512 - (KIT - 59052)	FITTING, 10-8 TRLON-S	4
19	18581 - (KIT - 59052)	CONNECTOR, REDUCER - ORS FF2281T-0812S	2
20	15436 - (KIT - 59052)	CAP - FF9863-16S	2
21	15434 - (KIT - 59052)	CAP - FF9863-08S	7

H101-0030 - PIPING, W/E U. (DISC/BASIC - HD) - HYDRAULIC HOSE KIT - MAIN TO HD STICK DISCSAW BASIC - TOOL

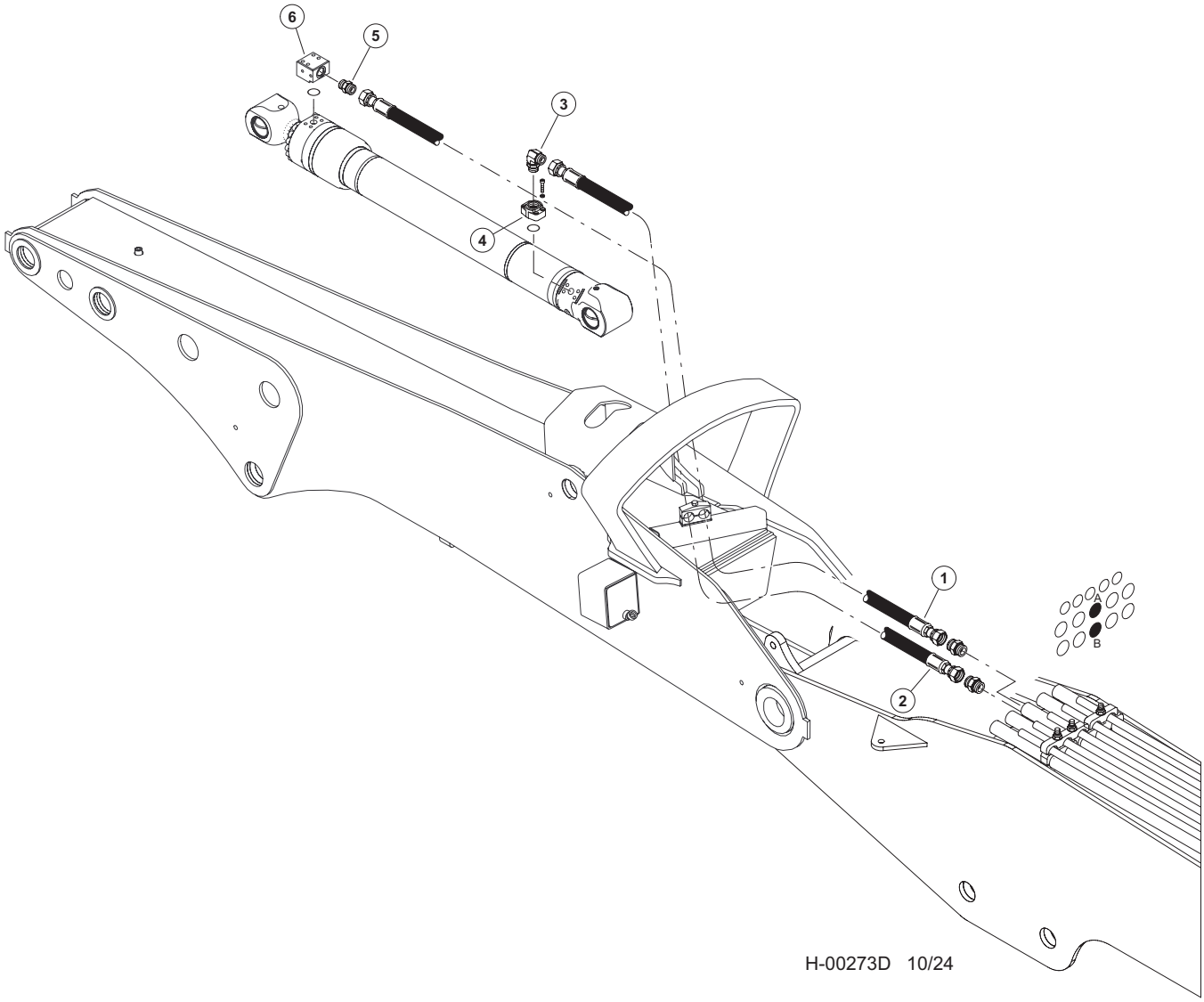

H-00273D 10/24

H101-0030 - PIPING, W/E U. (DISC/BASIC - HD) - HYDRAULIC HOSE KIT - MAIN TO HD STICK DISCSAW BASIC - TOOL

Item	Part #	Description	Qty.
1	66421 - (KIT - 663750)	HOSE, HYD, 787TC146 16-16OS-16OS - (TOOL TILT ROD)	1
2	66422 - (KIT - 663750)	HOSE, HYD, 787TC92 16-16OS-16OS - (TOOL TILT BASE)	1
3	15228 - (KIT - 59052)	ELBOW, 90 - FF1868T-1616S	1
4	18397 - (KIT - 59052)	CONNECTOR, FLANGE PAD - W48-16-16U(C 62)	1
5	15225 - (KIT - 59052)	CONNECTOR, STR - FF1852T-1616S	1
6	58231	MANIFOLD, PORT BLOCK - TOOL TILT CYL.	1

H101-0040 - PIPING, W/E U. (DISC/BASIC - HD) - HYDRAULIC HOSE KIT - MAIN TO HD STICK DISCSAW BASIC - STICK

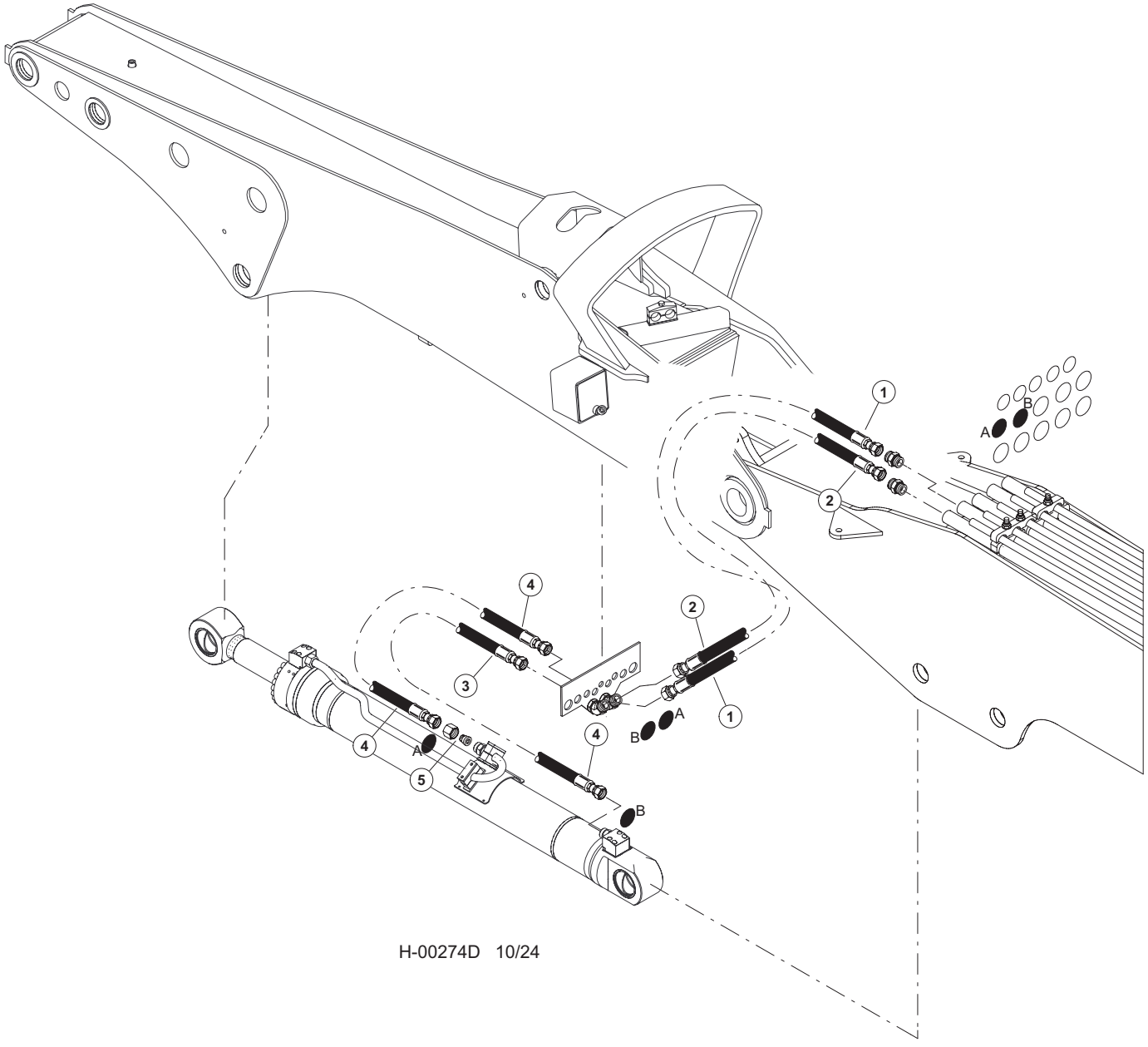

H-00274D 10/24

H101-0040 - PIPING, W/E U. (DISC/BASIC - HD) - HYDRAULIC HOSE KIT - MAIN TO HD STICK DISCSAW BASIC - STICK

Item	Part #	Description	Qty.
1	66420 - (KIT - 663750)	HOSE, HYD, 787TC66 16-16OS-16OS-W - (STICK CYL ROD)	1
2	66420 - (KIT - 663750)	HOSE, HYD, 787TC66 16-16OS-16OS-W - (STICK CYL BASE)	1
3	66429 - (KIT - 663760)	HOSE, HYD, 722TC76 16-16OS-16OS-W - (STICK CYL BASE)	1
4	66430 - (KIT - 663760)	HOSE, HYD, 722TC51 16-16OS-16OS-W - (STICK CYL ROD)	1
5	20455 - (KIT - 59052)	CONNECTOR, REDUCER - ORS FF2281T-1620S	1

H101-0050 - PIPING, W/E U. (DISC/BASIC - HD) - HYDRAULIC HOSE KIT - MAIN TO HD STICK DISCSAW BASIC - CLAMP

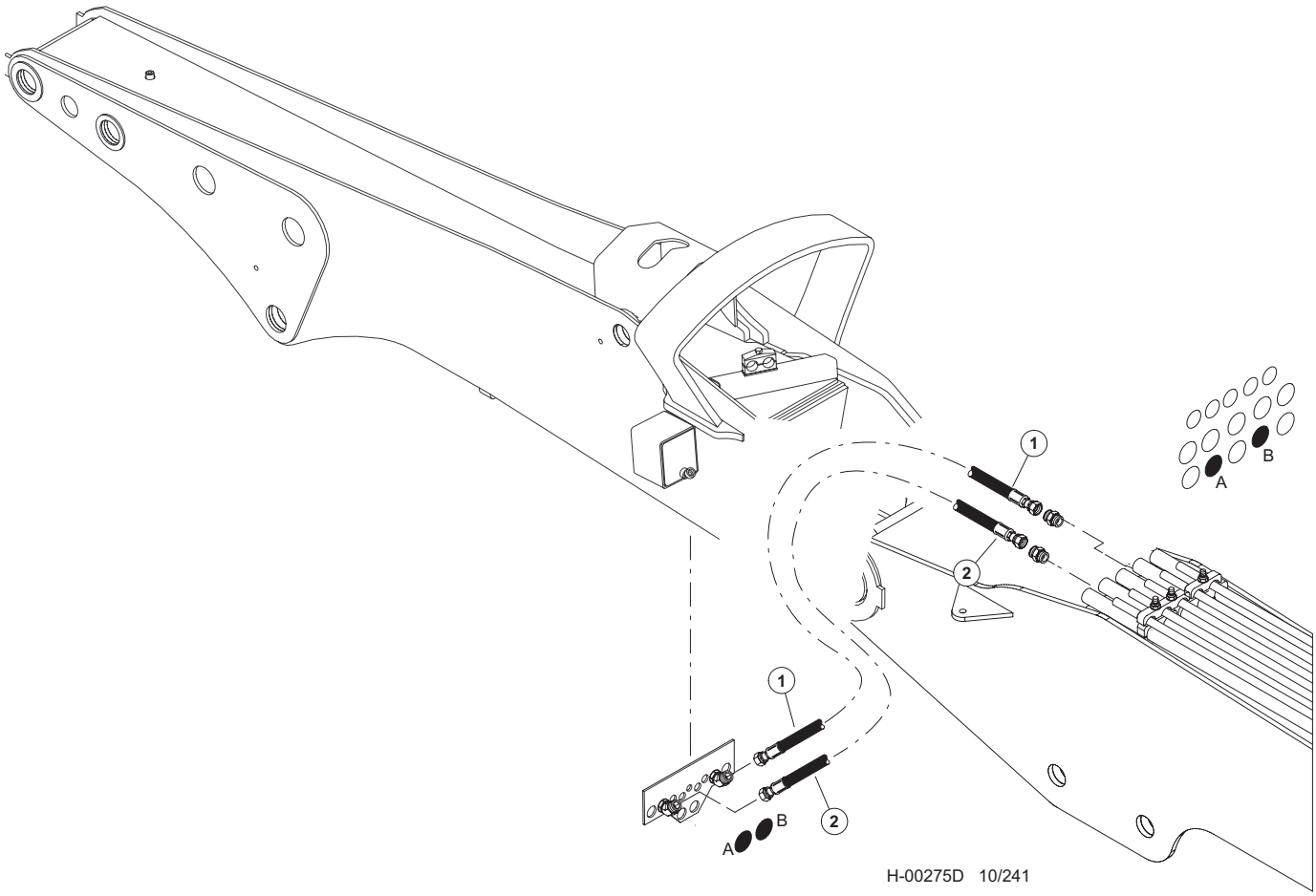

H101-0050 - PIPING, W/E U. (DISC/BASIC - HD) - HYDRAULIC HOSE KIT - MAIN TO HD STICK DISCSAW BASIC - CLAMP

Item	Part #	Description	Qty.
1	66424 - (KIT - 663750)	HOSE, HYD, 722TC63 12-12OS-12OS-W - (CLAMP - “A”)	1
2	66423 - (KIT - 663750)	HOSE, HYD, 722TC65 12-12OS-12OS-W - (CLAMP - “B”)	1

H101-0060 - PIPING, W/E U. (DISC/BASIC - HD) - HYDRAULIC HOSE KIT - MAIN TO HD STICK - ACCUMULATOR

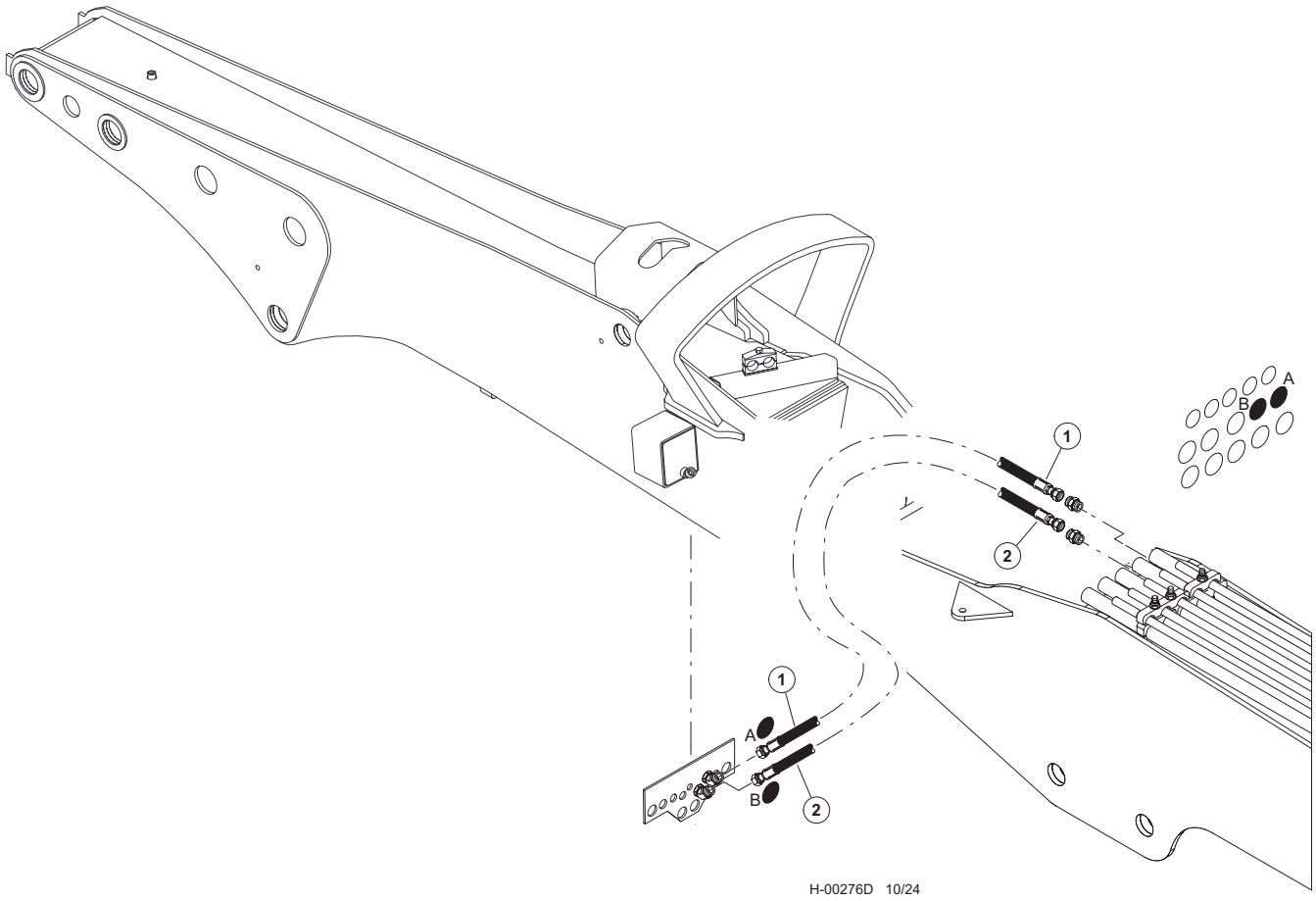

H-00276D 10/24

H101-0060 - PIPING, W/E U. (DISC/BASIC - HD) - HYDRAULIC HOSE KIT - MAIN TO HD STICK - ACCUMULATOR

Item	Part #	Description	Qty.
1	66425 - (KIT - 663750)	HOSE, HYD, 722TC68 10-10OS-10OS-W - (ACCUMULATOR - “A”)	1
2	66425 - (KIT - 663750)	HOSE, HYD, 722TC68 10-10OS-10OS-W - (ACCUMULATOR - “B”)	1

H101-0070 - PIPING, W/E U. (DISC/BASIC - HD) - HYDRAULIC HOSE KIT - MAIN TO HD STICK - LATERAL TILT

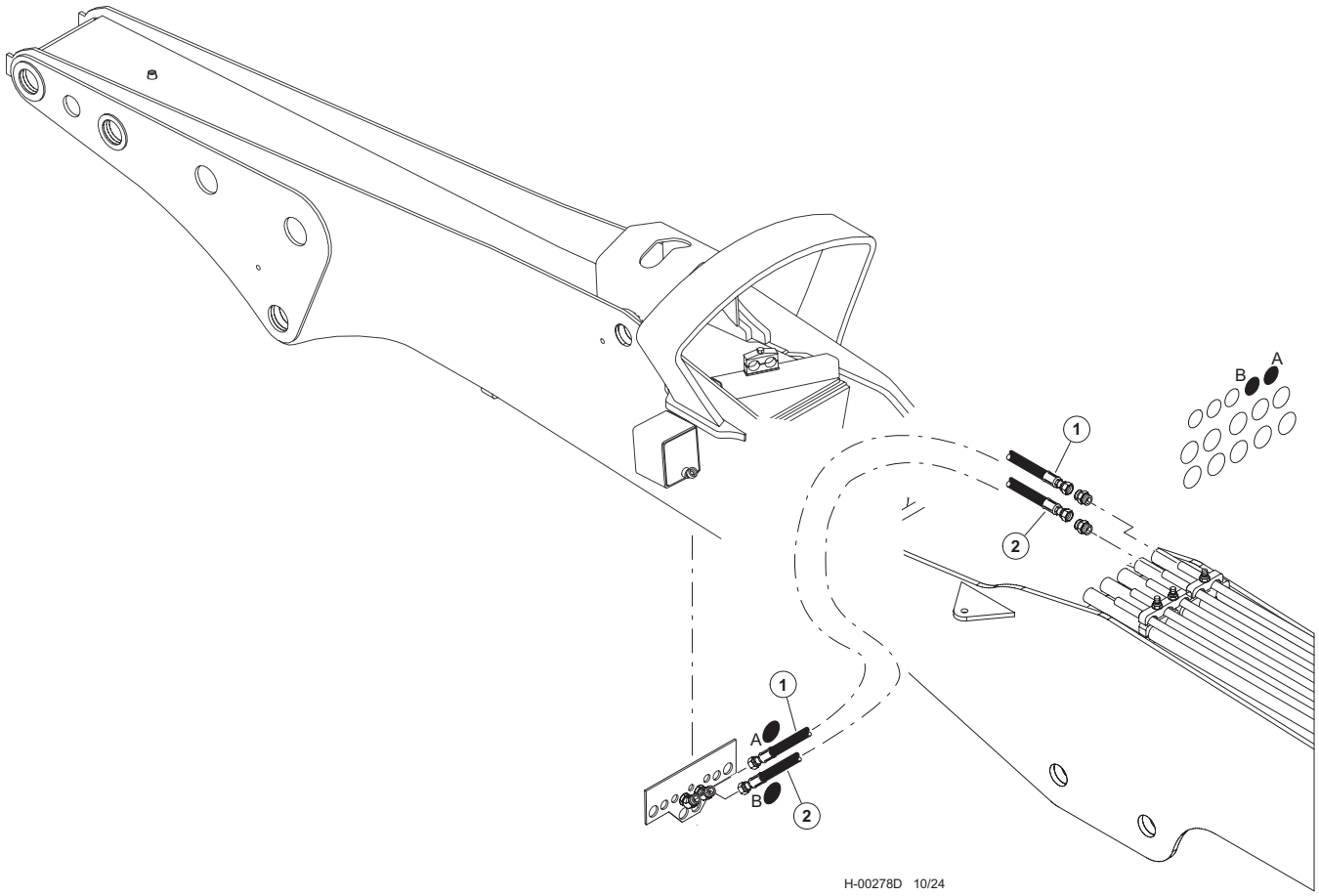

H101-0070 - PIPING, W/E U. (DISC/BASIC - HD) - HYDRAULIC HOSE KIT - MAIN TO HD STICK - LATERAL TILT

Item	Part #	Description	Qty.
1	66425 - (KIT - 663750)	HOSE, HYD, 722TC68 10-10OS-10OS-W - (LATERAL TILT - “A”)	1
2	66425 - (KIT - 663750)	HOSE, HYD, 722TC68 10-10OS-10OS-W - (LATERAL TILT - “B”)	1

H101-0080 - PIPING, W/E U. (DISC/BASIC - HD) - HYDRAULIC HOSE KIT - MAIN TO HD STICK - PRESS/RET

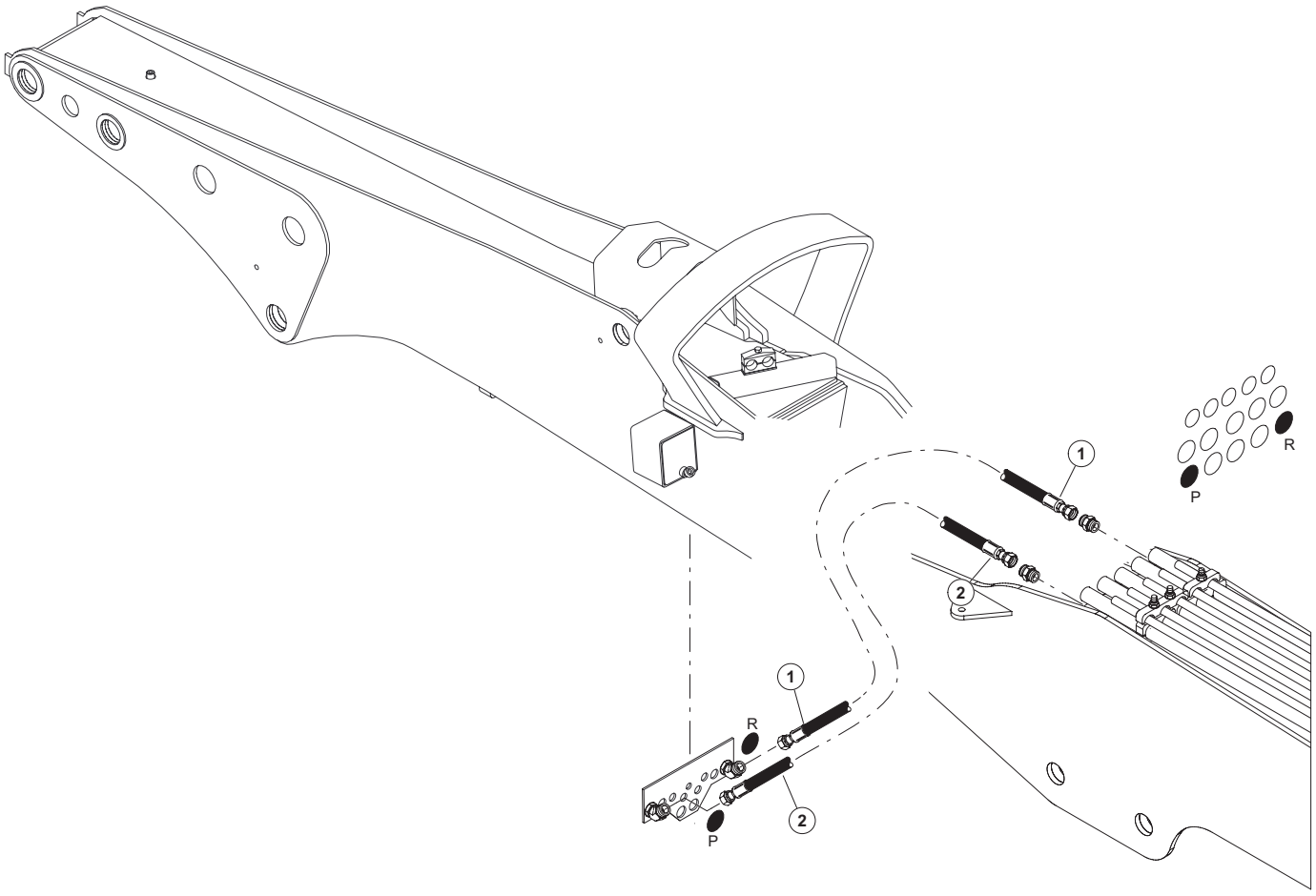

H-00279D 10/24

H101-0080 - PIPING, W/E U. (DISC/BASIC - HD) - HYDRAULIC HOSE KIT - MAIN TO HD STICK - PRESS/RET

Item	Part #	Description	Qty.
1	66419 - (KIT - 663750)	HOSE, HYD, 722TC68 16-16OS-16OS-W - (RETURN)	1
2	66418 - (KIT - 663750)	HOSE, HYD, 787TC63 16-16OS-16OS-W - (PRESSURE)	1

H101-0090 - PIPING, W/E U. (DISC/BASIC - HD) - HYDRAULIC HOSE KIT - MAIN TO HD STICK - CASE DRAIN

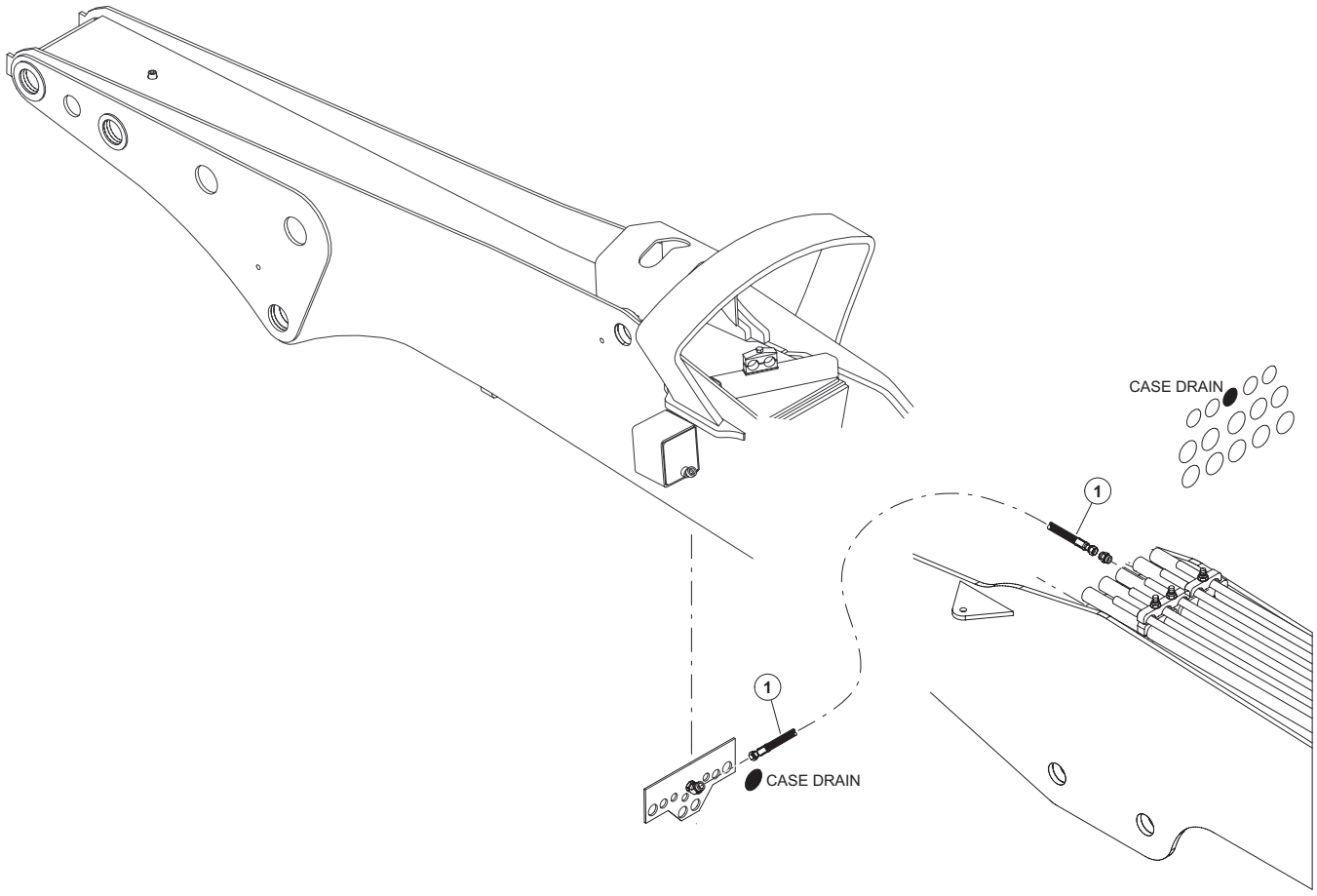

H-00280D 10/24

H101-0090 - PIPING, W/E U. (DISC/BASIC - HD) - HYDRAULIC HOSE KIT - MAIN TO HD STICK - CASE DRAIN

Item	Part #	Description	Qty.
1	66417 - (KIT - 663750)	HOSE, HYD, 722TC68 08-08OS-08OS-W - (CASE DRAIN)	1

H101-0100 - PIPING, W/E U. (DISC/BASIC - HD) - HYDRAULIC HOSE KIT - MAIN TO HD STICK - LIGHT WIRE

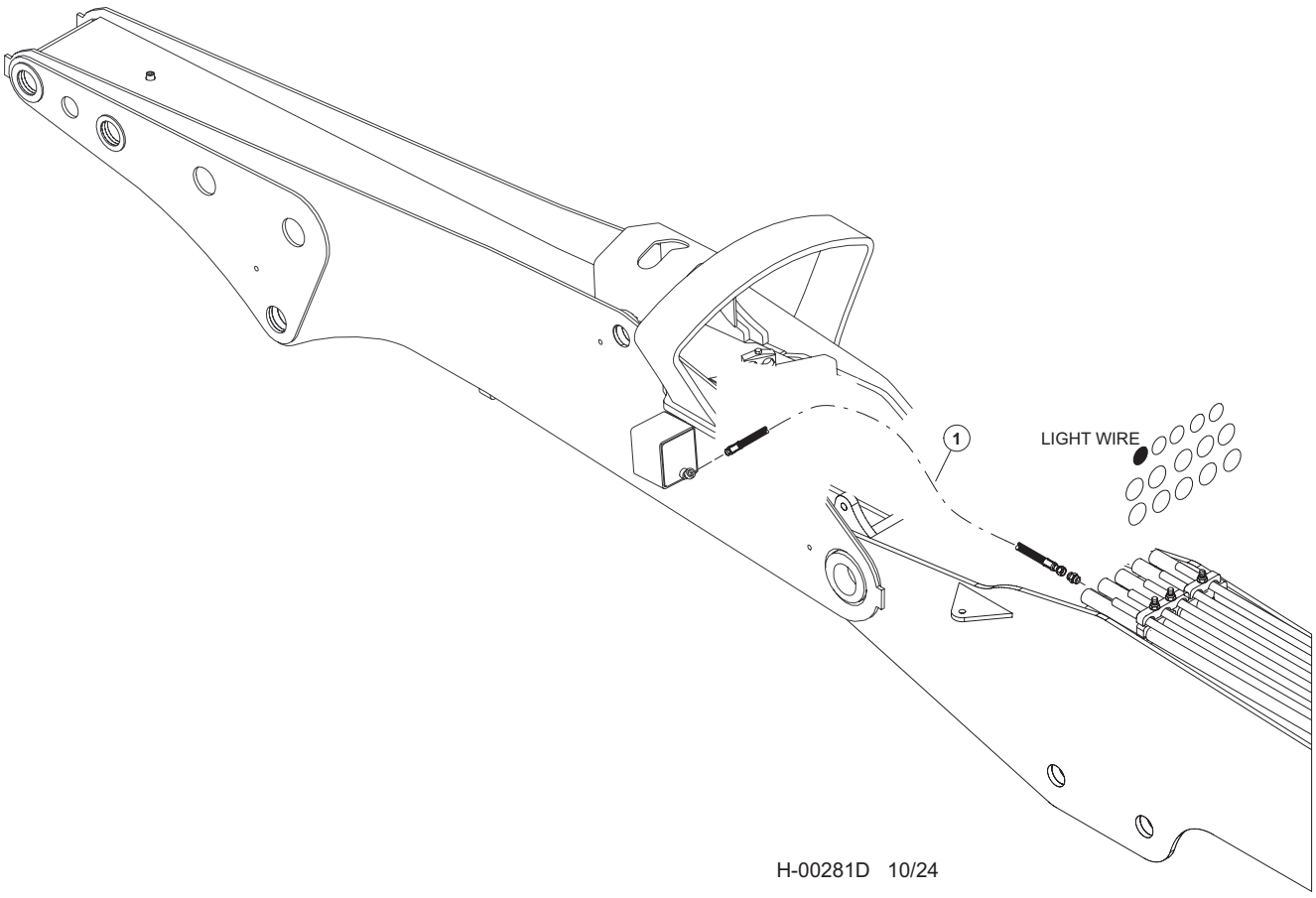

H-00281D 10/24

H101-0100 - PIPING, W/E U. (DISC/BASIC - HD) - HYDRAULIC HOSE KIT - MAIN TO HD STICK - LIGHT WIRE

Item	Part #	Description	Qty.
1	66416 - (KIT - 663750)	HOSE, HYD, 387TC96 06-06OS-08PS - (LIGHT WIRE)	1
	58380	CABLE - (NOT SHOWN)	30″

H101-0110 - PIPING, W/E U. (DISC/BASIC - HD) - HYDRAULIC HOSE KIT - MAIN TO HD STICK - GREASE LINES

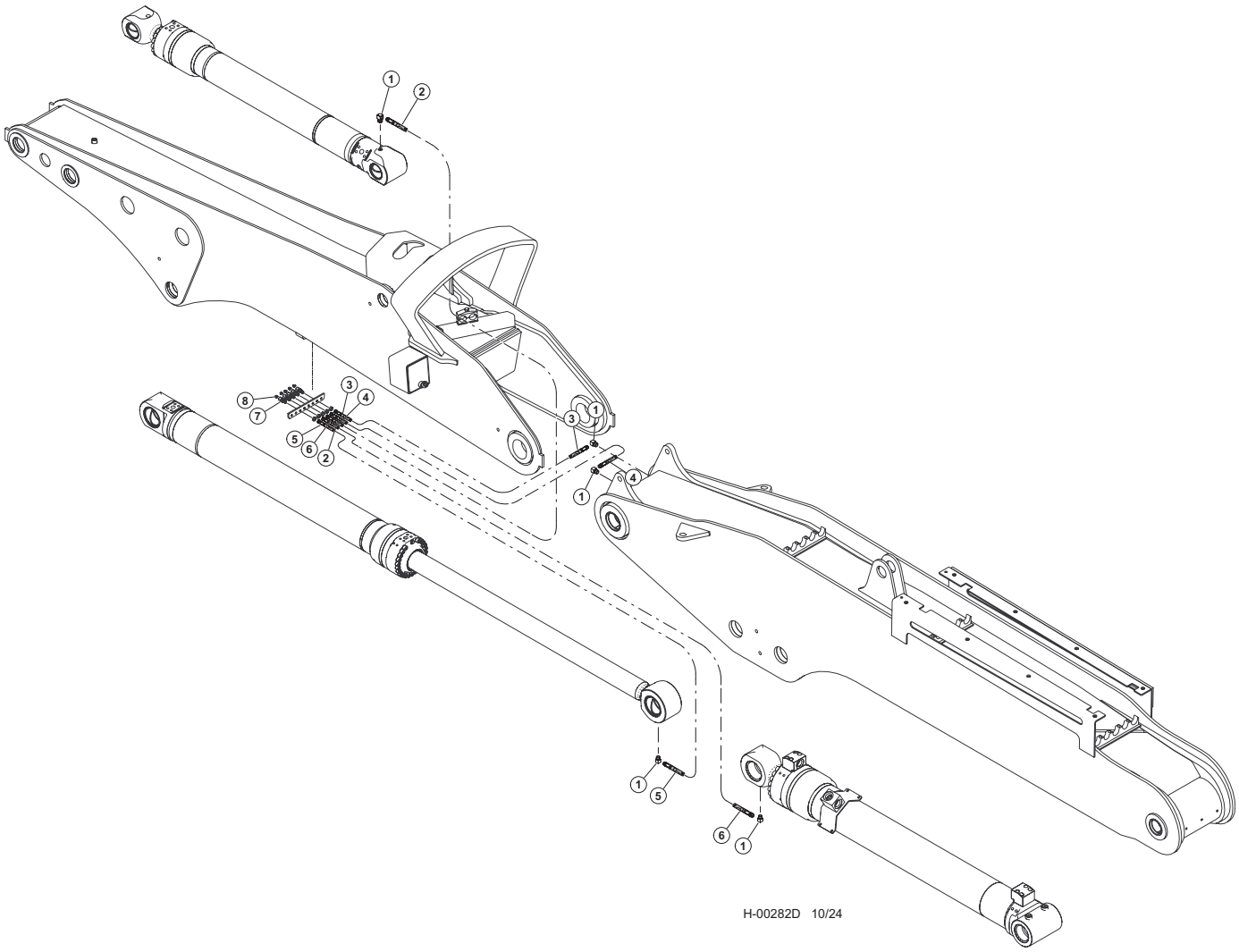

H101-0110 - PIPING, W/E U. (DISC/BASIC - HD) - HYDRAULIC HOSE KIT - MAIN TO HD STICK - GREASE LINES

Item	Part #	Description	Qty.
1	22281 - (KIT - 59052)	ELBOW, 1/8-27 NPTF(M), 1/8-17 NPTF(F),90	5
2	66436 - (KIT - 663760)	HOSE, HYD, HLBD92-02-02PS-04JS-W - (TOOL CYL BASE)	1
3	66435 - (KIT - 663760)	HOSE, HYD, HLBD92-02-02PS-04JS - MAIN TO STICK BOOM PIVOT)	1
4	66435 - (KIT - 663760)	HOSE, HYD, HLBD92-02-02PS-04JS - MAIN TO STICK BOOM PIVOT)	1
5	66433 - (KIT - 663760)	HOSE, HYD, HLBD138-02-02PS-04JS-WS100 - (MAIN CYL ROD)	1
6	66434 - (KIT - 663760)	HOSE, HYD, HLBD137-02-02PS-04JS - (STICK CYL BASE)	1
7	15658 - (KIT - 59052)	CONNECTOR, STR BULKHEAD - 2239-2-4S	5
8	59122 - (KIT - 59052)	ZERK, GREASE - 1/8-27 NPTF, ST	5

H101-0120 - PIPING, W/E U. (DISC/COMBO - TANGUAY HD)

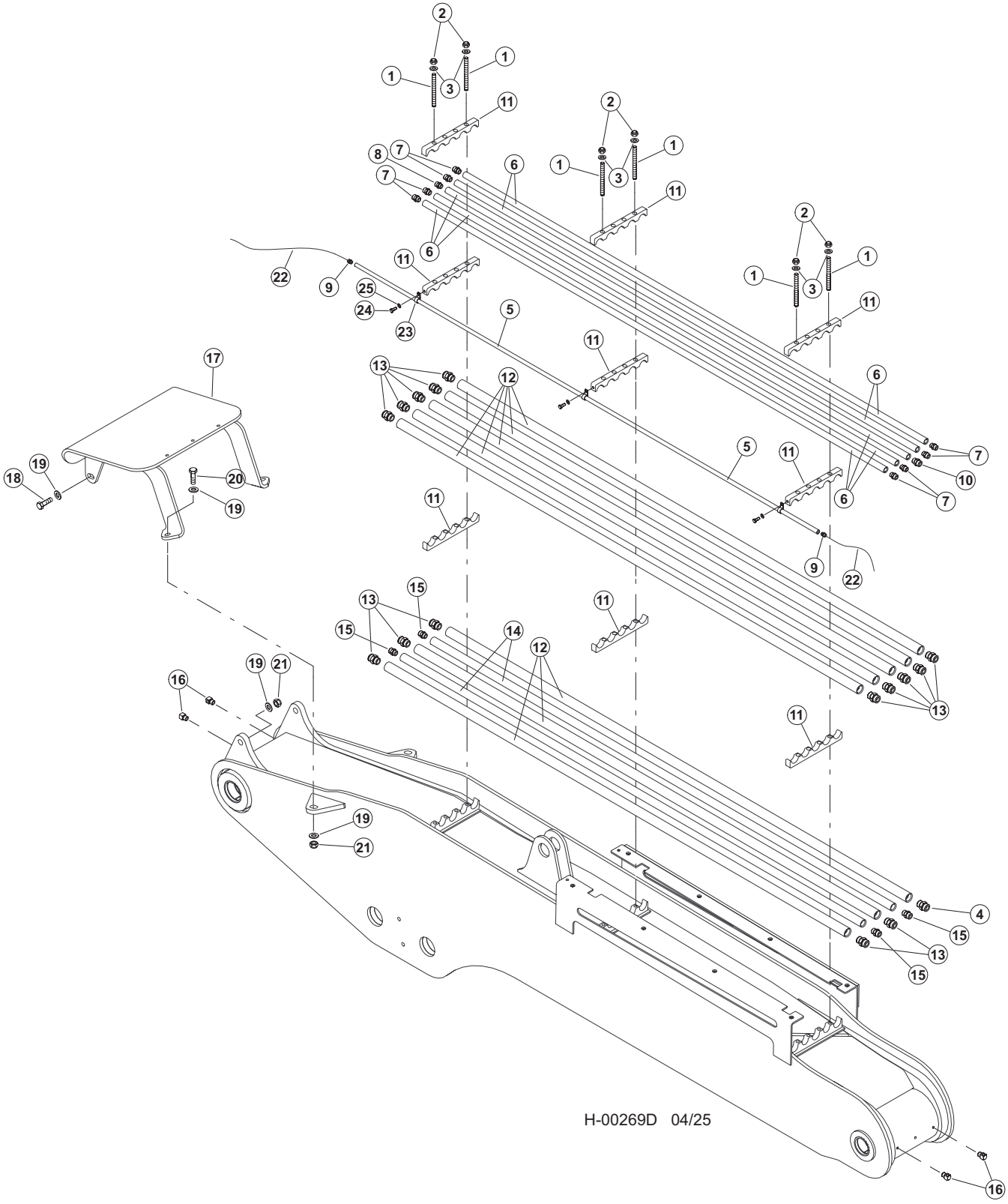

H101-0120 - PIPING, W/E U. (DISC/COMBO - TANGUAY HD)

Item	Part #	Description	Qty.
1	17062	STUD - .625” X 8”	12
2	15563	NUT, NYLOCK - .625”	12
3	10771	WASHER, SAE FLAT - .625”	12
4	17063 (KIT - 57400)	CONNECTOR, STR - FF1852T-2016S	1
5	53116	TUBELINE - .3/8” X 108” - BLACK PIPE	1
6	51815	TUBELINE - .5” X 108”	5
7	51880 (KIT - 57400)	CONNECTOR, STR - (10-8 F50L0-S)	4
8	15117 (KIT - 57400)	CONNECTOR, STR - FF1852T-0808S	1
9	51878 (KIT - 57400)	CONNECTOR, STR - MALE PIPE (6-6 FLO-S)	2
10	16913 (KIT - 57400)	CONNECTOR, STR - FF1852T-1208S	1
11	52155	CLAMP, SADDLE - DRILLED (5-1” TUBES)	9
12	51833	TUBELINE - 1” X 108” FB MAIN	8
13	15225 (KIT - 57400)	CONNECTOR, STR - FF1852T-1616S	15
14	51834	TUBELINE - .75” X 108” FB MAIN	2
15	15152 (KIT - 57400)	CONNECTOR, STR - FF1852T-1212S	4
16	22281	ELBOW, 1/8-27 NPTF(M), 1/8-17 NPTF(F),90	4
17	53927	GUARD, HOSE - MAIN BOOM (FB)(53919 BOOM)	1
18	10840	BOLT - .75” X 3”	2
19	10806	WASHER, 3/4” USS TRU-TORQ	8
20	58398	BOLT - .75” X 2.75”	2
21	10817	NUT, 3/4-10 UNC	4
22	58380	CABLE	30’
23	790752	CLAMP	3
24	23264	BOLT - .25” X .5”	3
25	10757	WASHER, SAE FLAT - .25”	3

H101-0130 - PIPING, W/E U. (DISC/COMBO - TANGUAY HD)

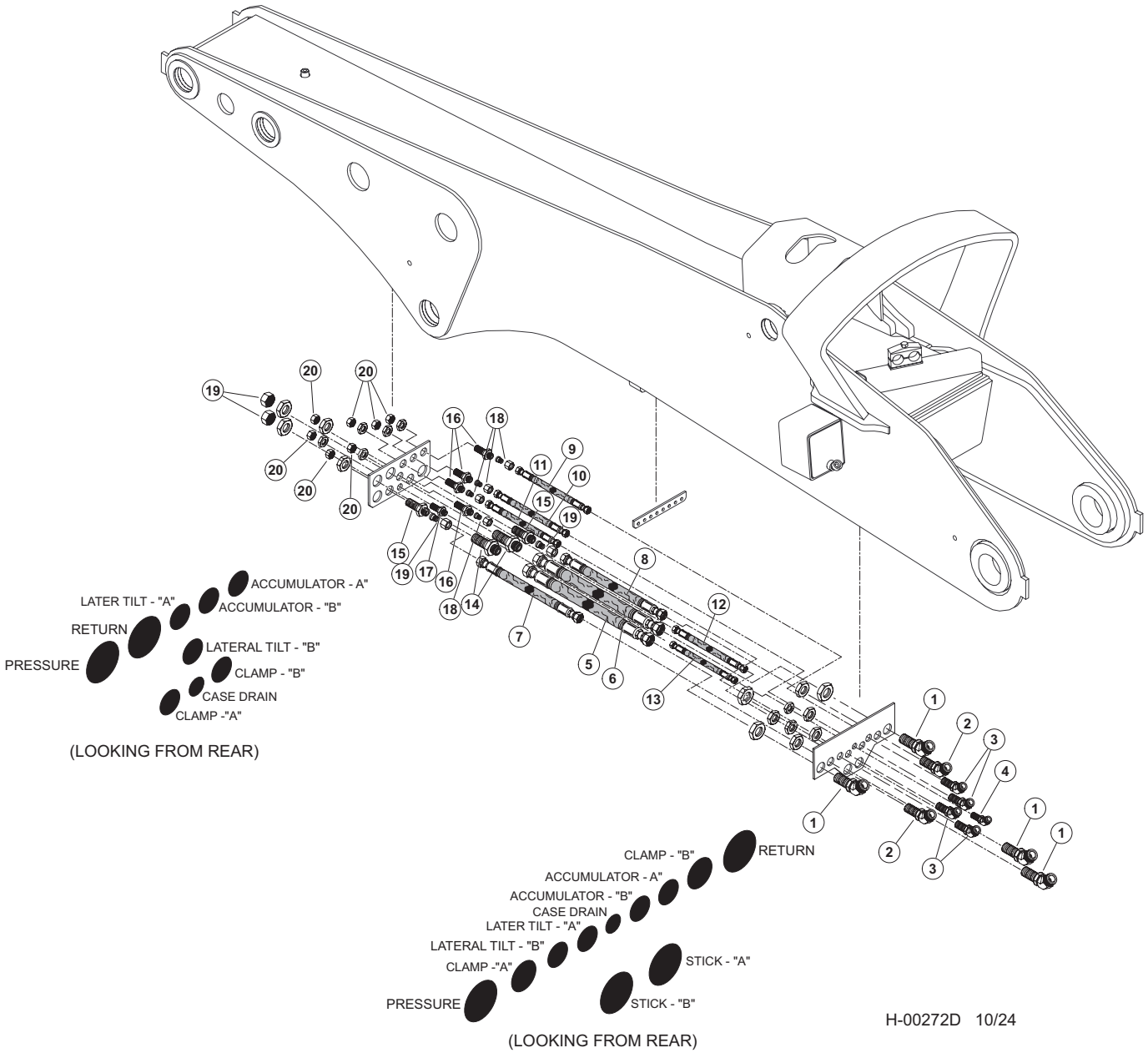

H101-0130 - PIPING, W/E U. (DISC/COMBO - TANGUAY HD)

Item	Part #	Description	Qty.
1	54316 - (KIT - 59052)	ELBOW, BULKHEAD UNION 45DEG #16	4
2	55509 - (KIT - 59052)	FITTING, BULKHEAD UNION - 45 DEGREE #12	2
3	55508 - (KIT - 59052)	FITTING, BULKHEAD ELBOW - 45 DEGREE #10	4
4	55507 - (KIT - 59052)	FITTING, BULKHEAD ELBOW - 45 DEGREE - #8	1
5	66427 - (KIT - 663760)	HOSE, HYD, 787TC91 16-16OS-16OS-W - (PRESSURE)	1
6	66428 - (KIT - 663760)	HOSE, HYD, 722TC91 16-16OS-16OS-W - (RETURN)	1
7	66431 - (KIT - 663760)	HOSE, HYD, 722TC91.5 12-12OS-12OS-W - (CLAMP - “A”)	1
8	66431 - (KIT - 663760)	HOSE, HYD, 722TC91.5 12-12OS-12OS-W - (CLAMP - “B”)	1
9	66432 - (KIT - 663760)	HOSE, HYD, 722TC91 10-10OS-10OS-W - (ACCUMULATOR - “A”)	1
10	66432 - (KIT - 663760)	HOSE, HYD, 722TC91 10-10OS-10OS-W - (ACCUMULATOR - “B”)	1
11	66432 - (KIT - 663760)	HOSE, HYD, 722TC91 10-10OS-10OS-W - (LATERAL TILT - “A”)	1
12	66432 - (KIT - 663760)	HOSE, HYD, 722TC91 10-10OS-10OS-W - (LATERAL TILT - “B”)	1
13	66426 - (KIT - 663760)	HOSE, HYD, 722TC68 08-08OS-08OS-W- (CASE DRAIN)	1
14	20033 - (KIT - 59052)	CONNECTOR, STR BULKHEAD - 832-TT-16	2
15	19754 - (KIT - 59052)	CONNECTOR, STR BULKHEAD - 12 WLO-WLNL-S	2
16	50037 - (KIT - 59052)	CONNECTOR, STR BULKHEAD - 832-TT-10	4
17	20196 - (KIT - 59052)	CONNECTOR, STR BULKHEAD - FF1994T-0808S	1
18	57512 - (KIT - 59052)	FITTING, 10-8 TRLON-S	4
19	18581 - (KIT - 59052)	CONNECTOR, REDUCER - ORS FF2281T-0812S	2
20	15436 - (KIT - 59052)	CAP - FF9863-16S	2
21	15434 - (KIT - 59052)	CAP - FF9863-08S	7

H101-0140 - PIPING, W/E U. (DISC/COMBO - SAW HOSES TANGUAY HD)

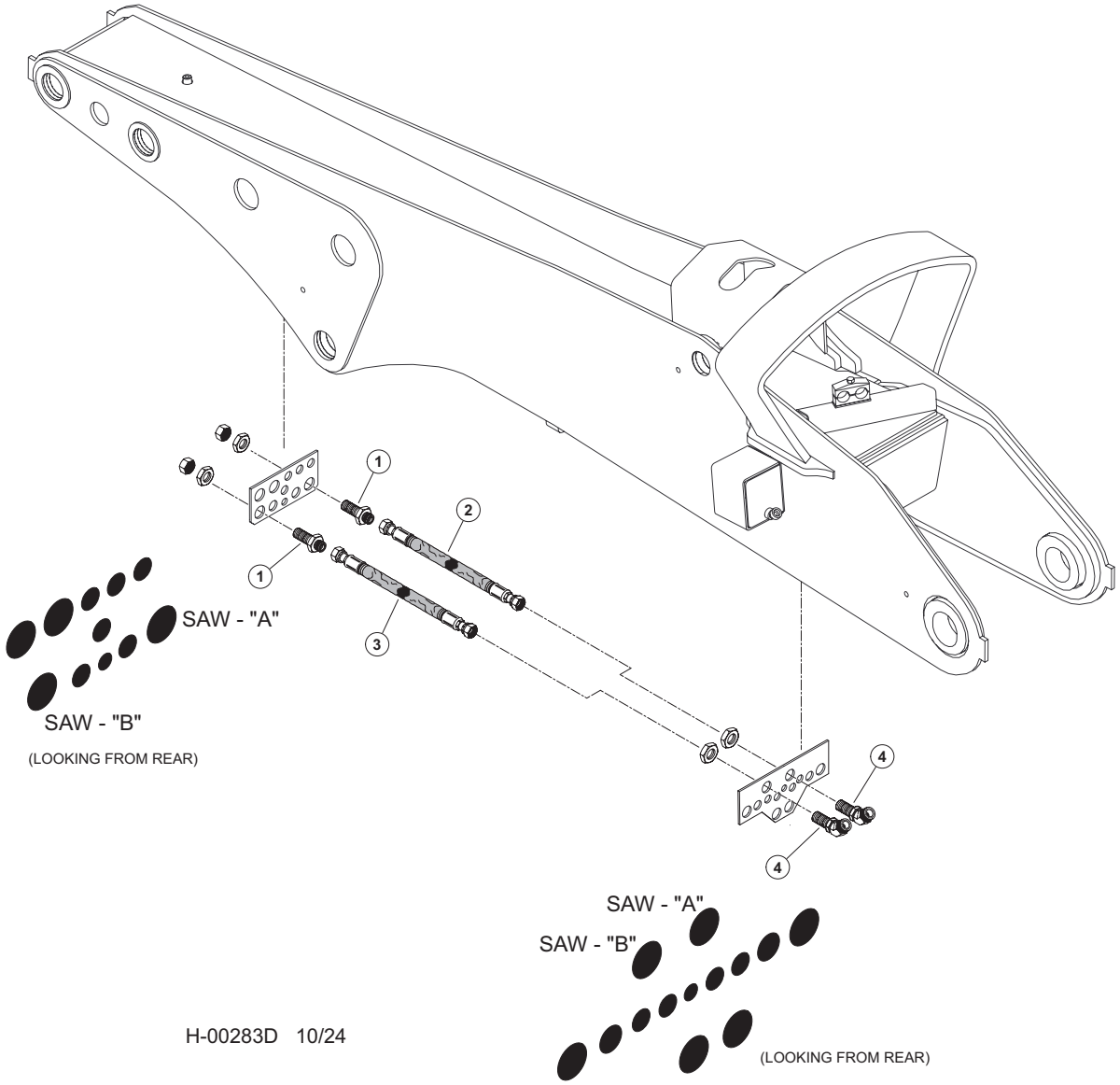

H-00283D 10/24

H101-0140 - PIPING, W/E U. (DISC/COMBO - SAW HOSES TANGUAY HD)

Item	Part #	Description	Qty.
1	20033	CONNECTOR, STR BULKHEAD - 832-TT-16	2
2	66427	HOSE, HYD, 787TC91 16-16OS-16OS-W - (SAW - “A”)	1
3	66428	HOSE, HYD, 722TC91 16-16OS-16OS-W - (SAW - “B”)	1
4	54316	ELBOW, BULKHEAD UNION 45DEG #16	2

H101-0150 - PIPING, W/E U. (DISC/COMBO - TANGUAY HD) - HYDRAULIC HOSE KIT - MAIN TO HD STICK - TOOL

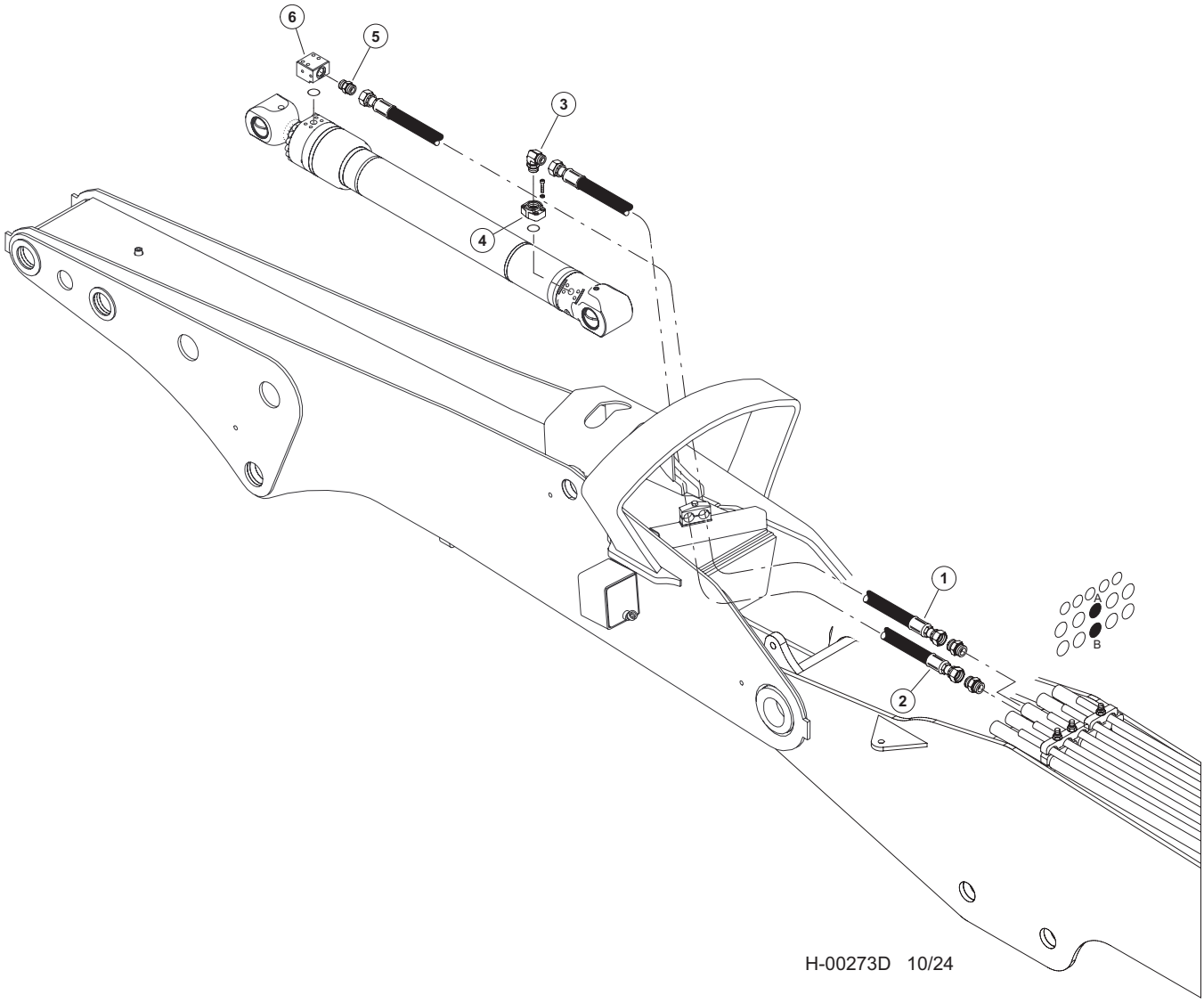

H101-0150 - PIPING, W/E U. (DISC/COMBO - TANGUAY HD) - HYDRAULIC HOSE KIT - MAIN TO HD STICK - TOOL

Item	Part #	Description	Qty.
1	66421 - (KIT - 663750)	HOSE, HYD, 787TC146 16-16OS-16OS - (TOOL TILT ROD)	1
2	66422 - (KIT - 663750)	HOSE, HYD, 787TC92 16-16OS-16OS - (TOOL TILT BASE)	1
3	15228 - (KIT - 59052)	ELBOW, 90 - FF1868T-1616S	1
4	18397 - (KIT - 59052)	CONNECTOR, FLANGE PAD - W48-16-16U(C 62)	1
5	15225 - (KIT - 59052)	CONNECTOR, STR - FF1852T-1616S	1
6	58231	MANIFOLD, PORT BLOCK - TOOL TILT CYL.	1

H101-0160 - PIPING, W/E U. (DISC/COMBO - TANGUAY HD) - HYDRAULIC HOSE KIT - MAIN TO HD STICK - STICK BOOM

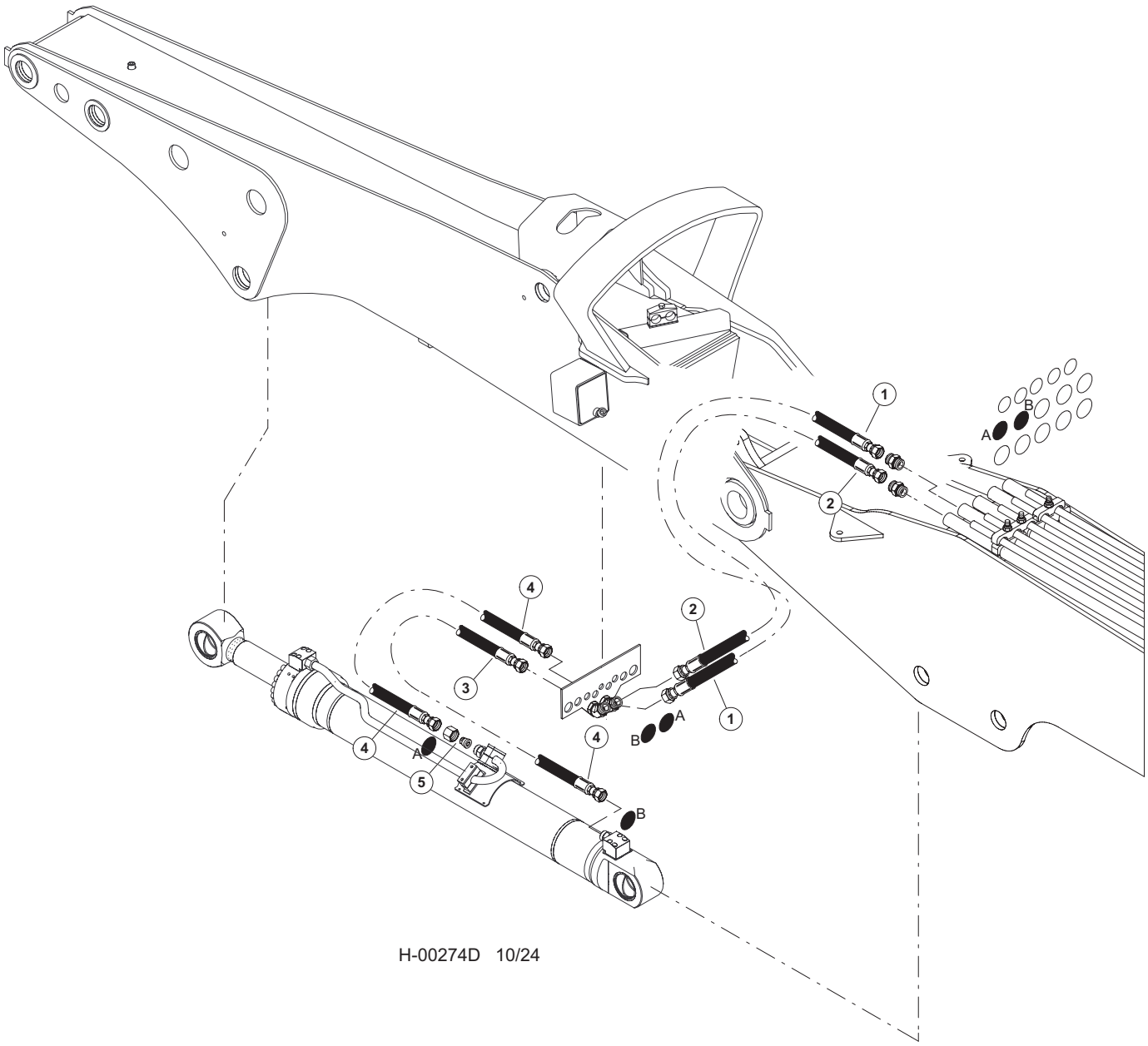

H-00274D 10/24

H101-0160 - PIPING, W/E U. (DISC/COMBO - TANGUAY HD) - HYDRAULIC HOSE KIT - MAIN TO HD STICK - STICK BOOM

Item	Part #	Description	Qty.
1	66420 - (KIT - 663750)	HOSE, HYD, 787TC66 16-16OS-16OS-W - (STICK CYL ROD)	1
2	66420 - (KIT - 663750)	HOSE, HYD, 787TC66 16-16OS-16OS-W - (STICK CYL BASE)	1
3	66429 - (KIT - 663760)	HOSE, HYD, 722TC76 16-16OS-16OS-W - (STICK CYL BASE)	1
4	66430 - (KIT - 663760)	HOSE, HYD, 722TC51 16-16OS-16OS-W - (STICK CYL ROD)	1
5	20455 - (KIT - 59052)	CONNECTOR, REDUCER - ORS FF2281T-1620S	1

H101-0170 - PIPING, W/E U. (DISC/COMBO - TANGUAY HD) - HYDRAULIC HOSE KIT - MAIN TO HD STICK - CLAMP

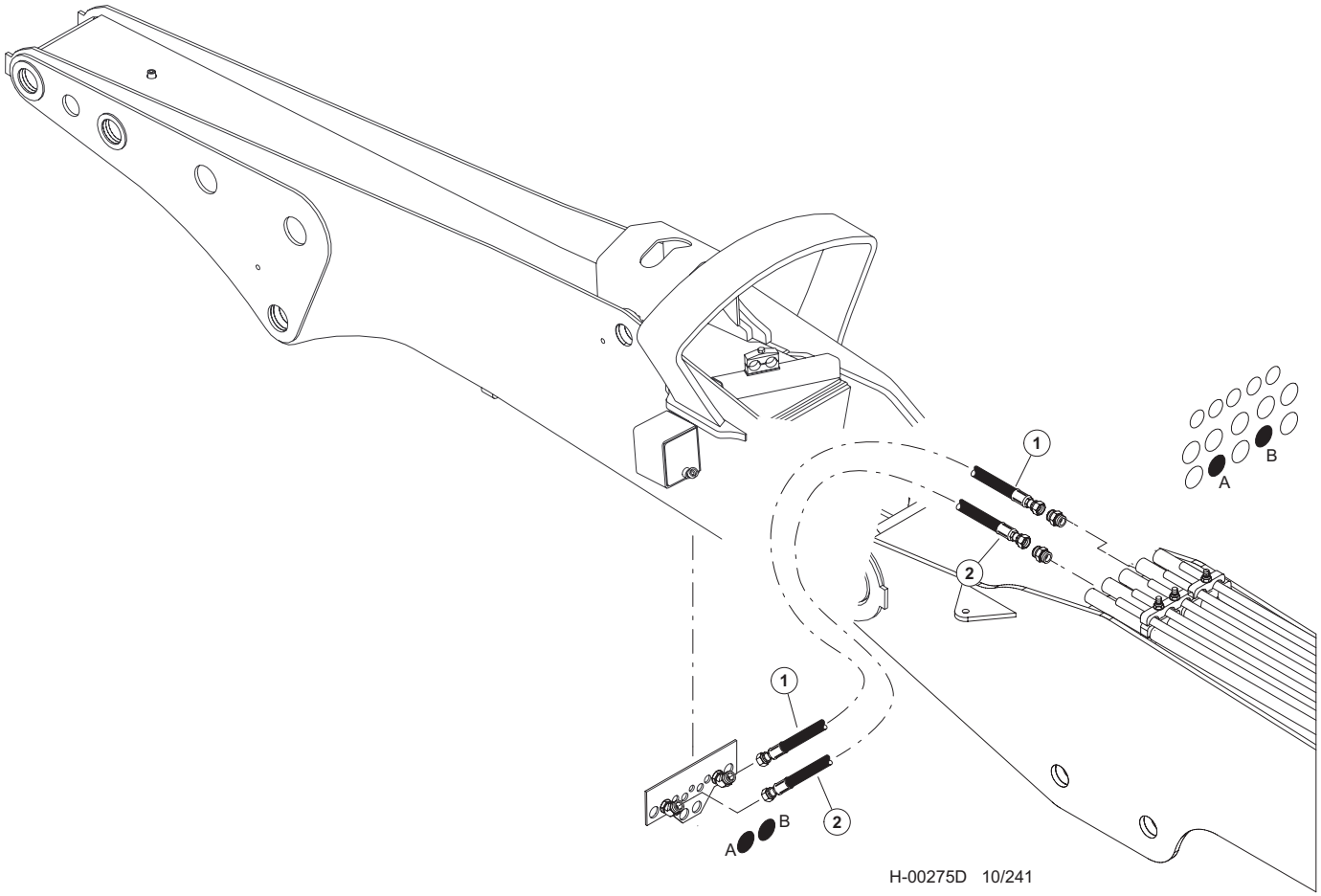

H101-0170 - PIPING, W/E U. (DISC/COMBO - TANGUAY HD) - HYDRAULIC HOSE KIT - MAIN TO HD STICK - CLAMP

Item	Part #	Description	Qty.
1	66424 - (KIT - 663750)	HOSE, HYD, 722TC63 12-12OS-12OS-W - (CLAMP - “A”)	1
2	66423 - (KIT - 663750)	HOSE, HYD, 722TC65 12-12OS-12OS-W - (CLAMP - “B”)	1

H101-0180 - PIPING, W/E U. (DISC/COMBO - TANGUAY HD) HYDRAULIC HOSE KIT - MAIN TO HD STICK - ACCUMULATOR

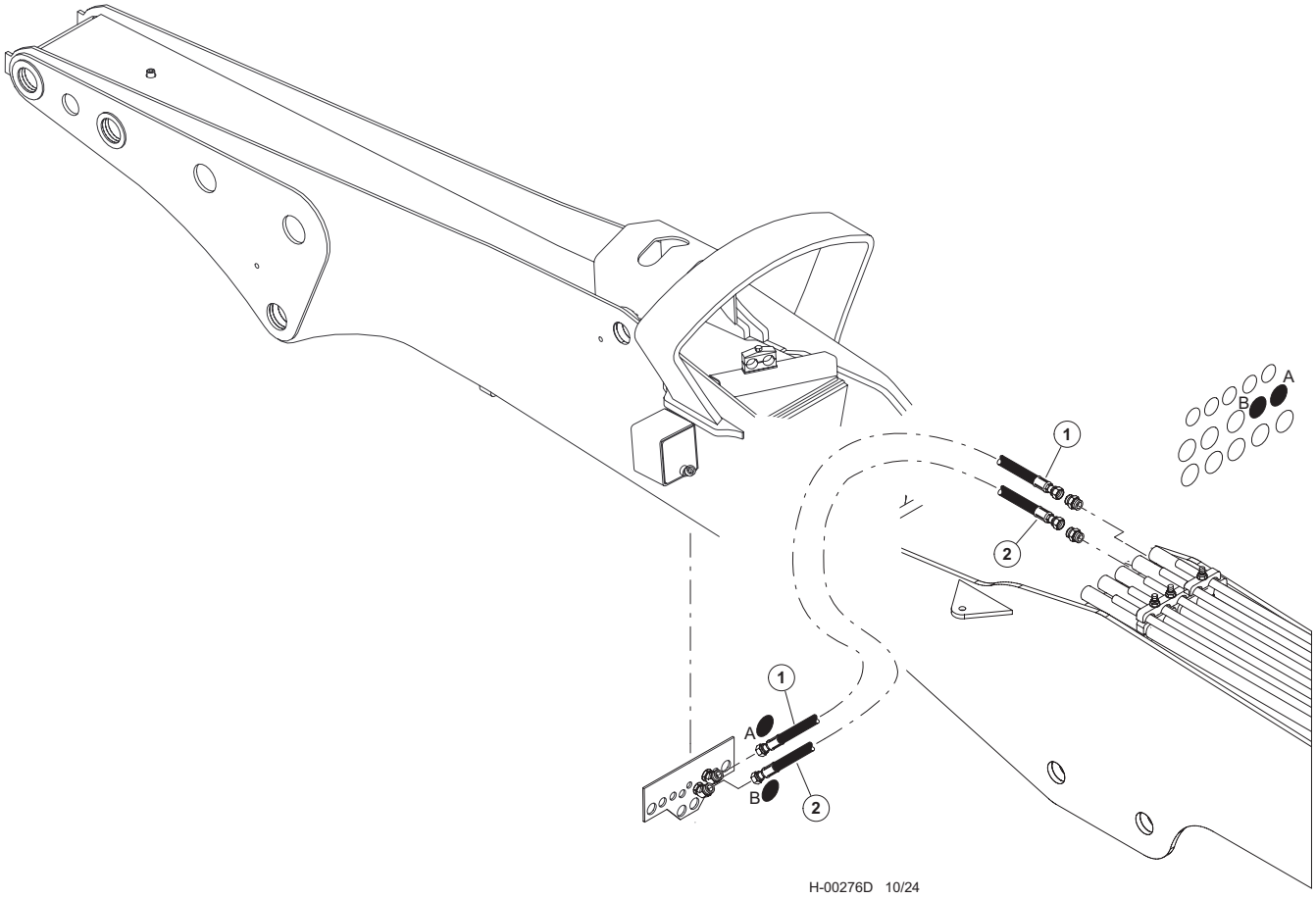

H-00276D 10/24

H101-0180 - PIPING, W/E U. (DISC/COMBO - TANGUAY HD) HYDRAULIC HOSE KIT - MAIN TO HD STICK - ACCUMULATOR

Item	Part #	Description	Qty.
1	66425 - (KIT - 663750)	HOSE, HYD, 722TC68 10-10OS-10OS-W - (ACCUMULATOR - “A”)	1
2	66425 - (KIT - 663750)	HOSE, HYD, 722TC68 10-10OS-10OS-W - (ACCUMULATOR - “B”)	1

H101-0190 - PIPING, W/E U. (DISC/COMBO - TANGUAY HD) - HYDRAULIC HOSE KIT - MAIN TO HD STICK - LATERAL TILT

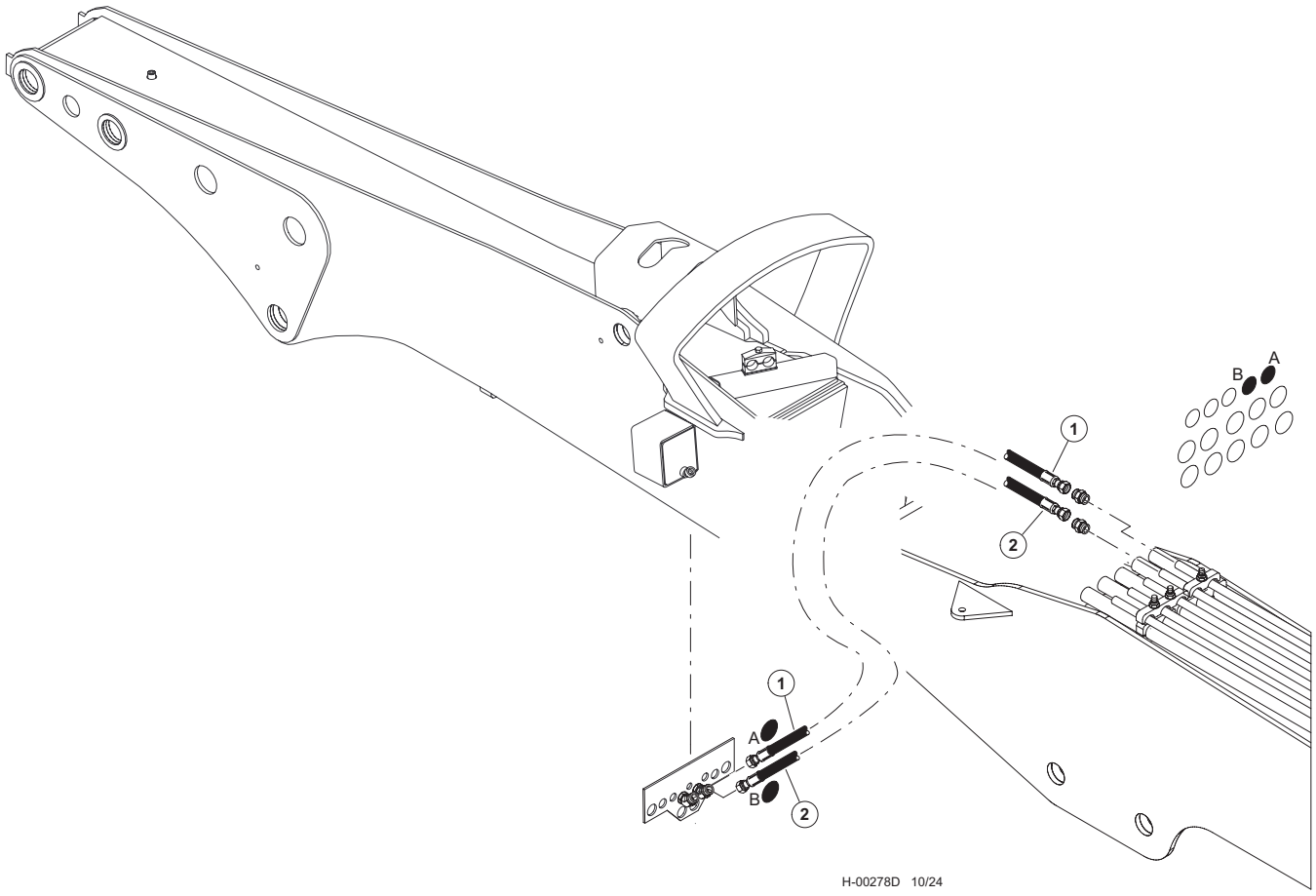

H101-0190 - Piping, W/E U. (Disc/Combo - TANGUAY HD) - HYDRAULIC HOSE KIT - MAIN TO HD STICK - LATERAL TILT

Item	Part #	Description	Qty.
1	66425 - (KIT - 663750)	HOSE, HYD, 722TC68 10-10OS-10OS-W - (LATERAL TILT - “A”)	1
2	66425 - (KIT - 663750)	HOSE, HYD, 722TC68 10-10OS-10OS-W - (LATERAL TILT - “B”)	1

H101-200 - PIPING, W/E U. (DISC/COMBO - TANGUAY HD) - HYDRAULIC HOSE KIT - MAIN TO HD STICK - PRESS/RET

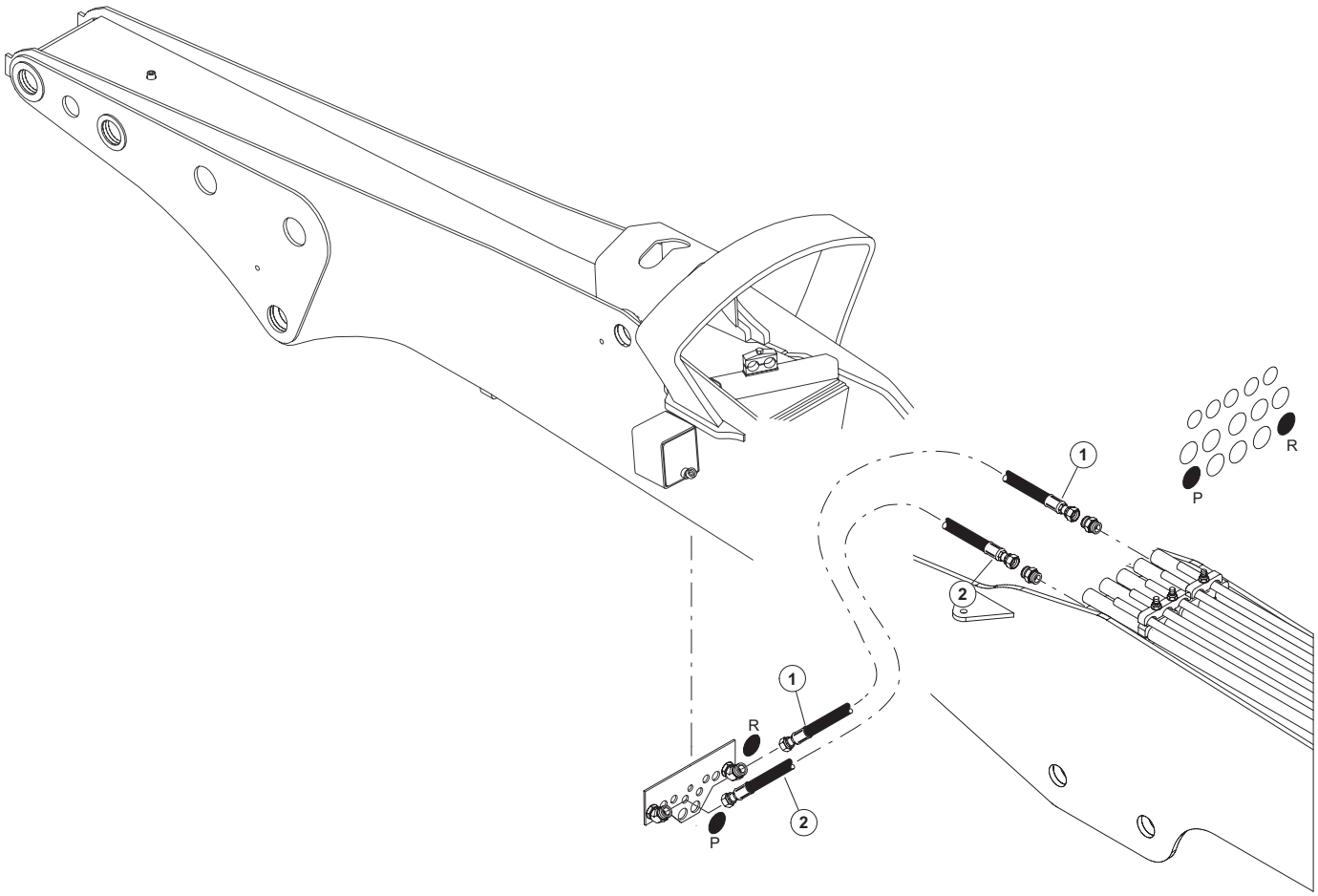

H-00279D 10/24

H101-200 - PIPING, W/E U. (DISC/COMBO - TANGUAY HD) - HYDRAULIC HOSE KIT - MAIN TO HD STICK - PRESS/RET

Item	Part #	Description	Qty.
1	66419 - (KIT - 663750)	HOSE, HYD, 722TC68 16-16OS-16OS-W - (RETURN)	1
2	66418 - (KIT - 663750)	HOSE, HYD, 787TC63 16-16OS-16OS-W - (PRESSURE)	1

H101-210 - PIPING, W/E U. (DISC/COMBO - TANGUAY HD) - HYDRAULIC HOSE KIT - MAIN TO HD STICK - CASE DRAIN

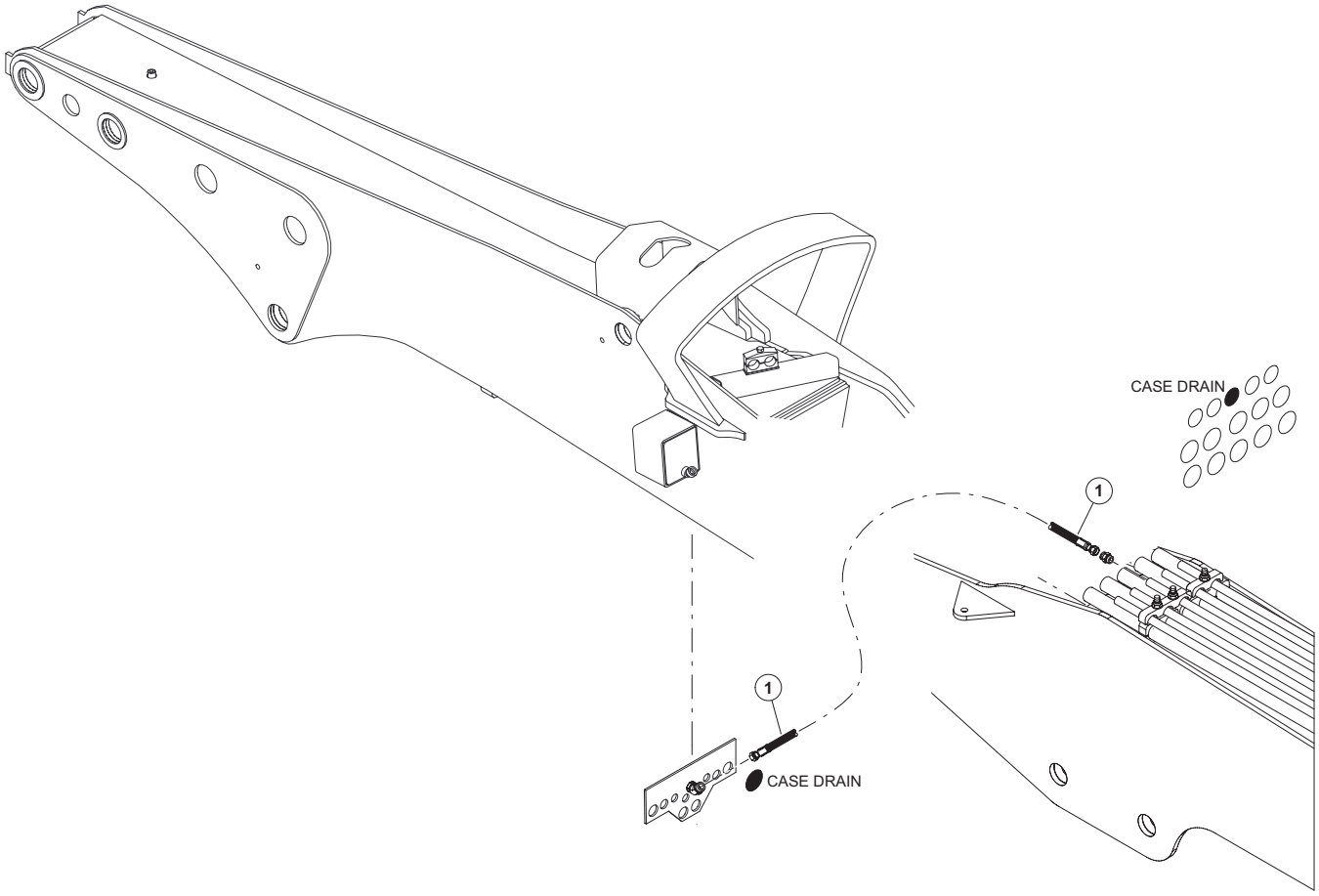

H-00280D 10/24

H101-210 - PIPING, W/E U. (DISC/COMBO - TANGUAY HD) - HYDRAULIC HOSE KIT - MAIN TO HD STICK - CASE DRAIN

Item	Part #	Description	Qty.
1	66417 - (KIT - 663750)	HOSE, HYD, 722TC68 08-08OS-08OS-W - (CASE DRAIN)	1

H101-220 - PIPING, W/E U. (DISC/COMBO - TANGUAY HD) - HYDRAULIC HOSE KIT - MAIN TO HD STICK - LIGHT WIRE

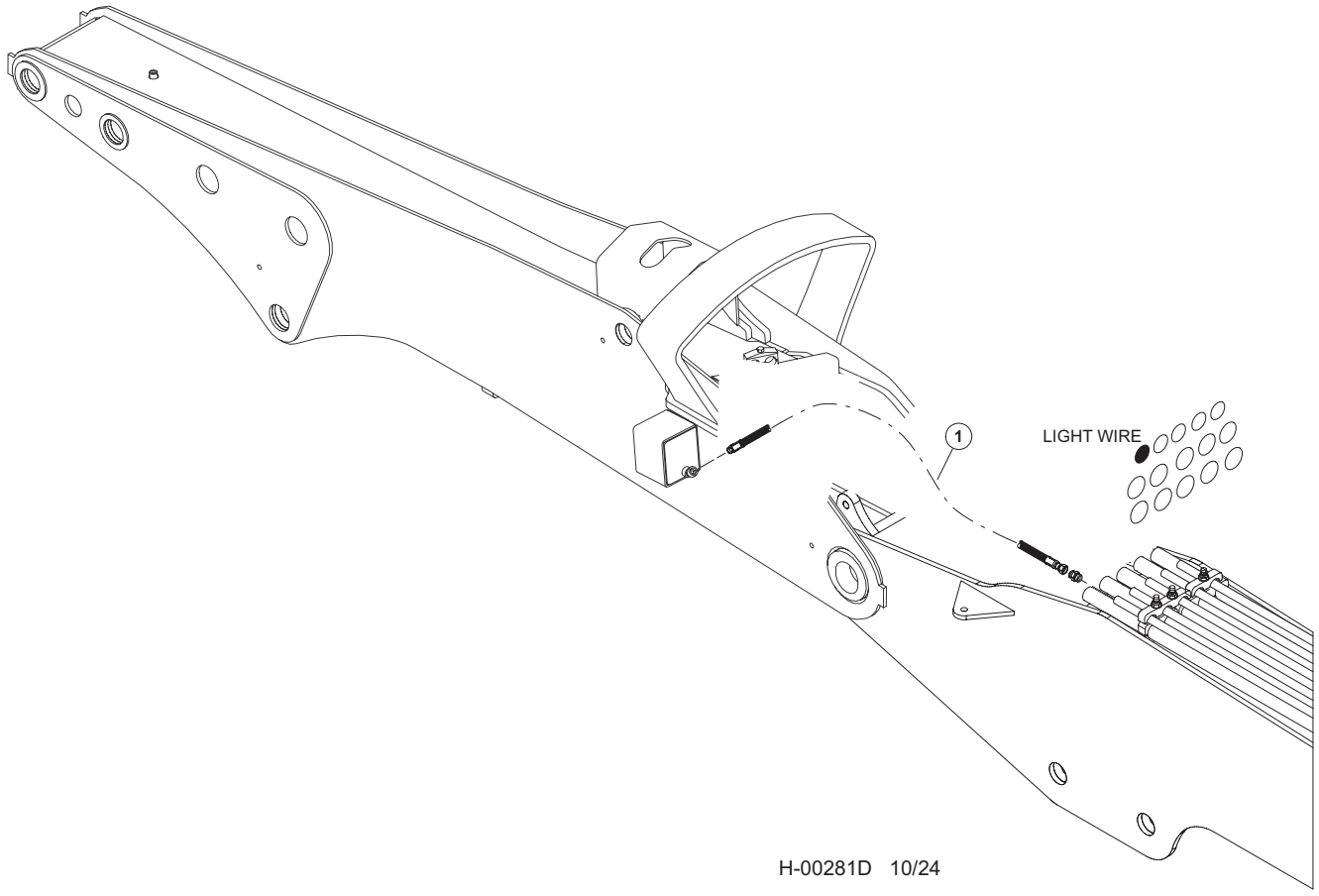

H-00281D 10/24

H101-220 - PIPING, W/E U. (DISC/COMBO - TANGUAY HD) - HYDRAULIC HOSE KIT - MAIN TO HD STICK - LIGHT WIRE

Item	Part #	Description	Qty.
1	66416 - (KIT - 663750)	HOSE, HYD, 387TC96 06-06OS-08PS - (LIGHT WIRE)	1
	58380	CABLE - (NOT SHOWN)	1

H101-230 - PIPING, W/E U. (DISC/COMBO - TANGUAY HD) - HYDRAULIC HOSE KIT - MAIN TO HD STICK - SAW

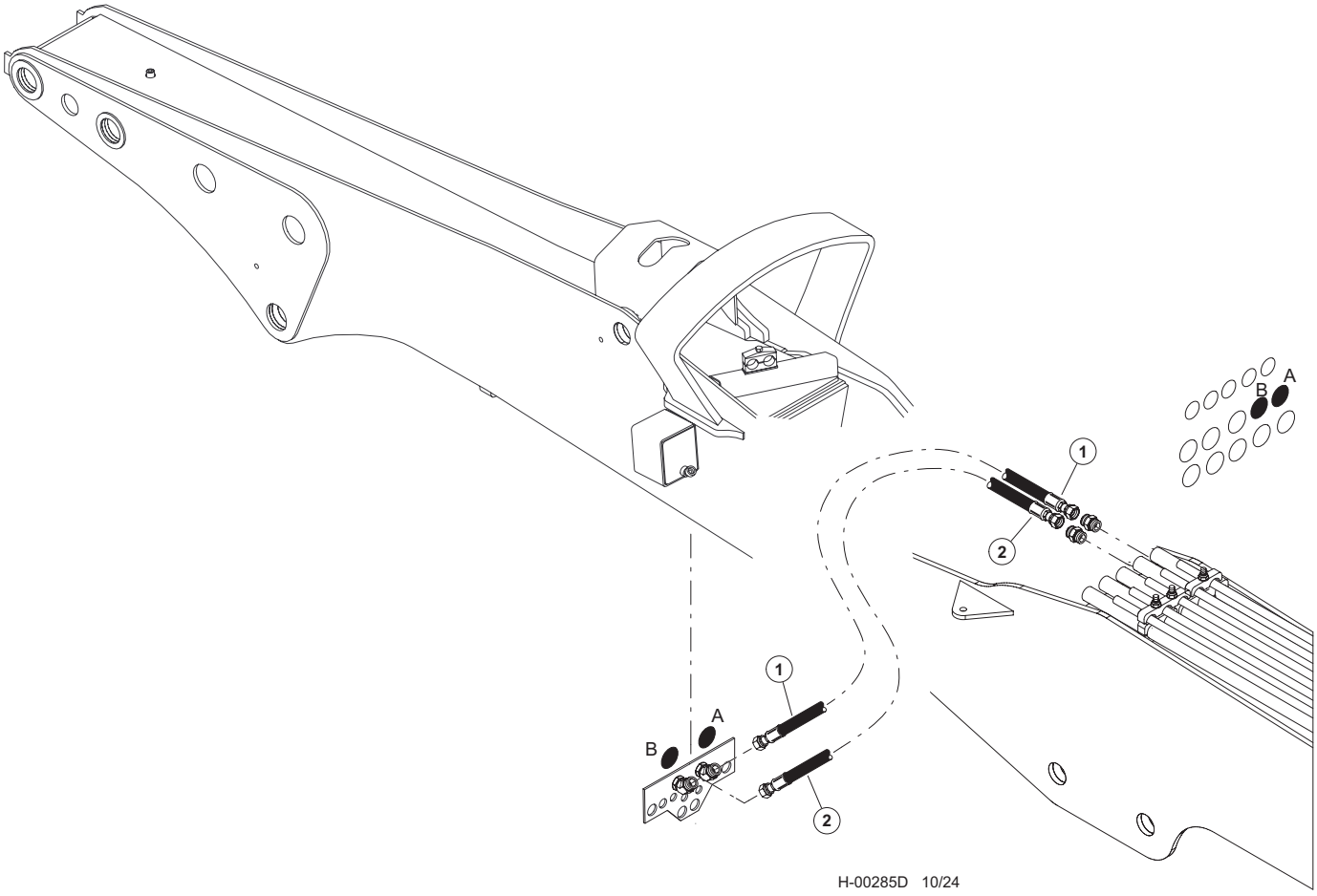

H-00285D 10/24

H101-230 - PIPING, W/E U. (DISC/COMBO - TANGUAY HD) - HYDRAULIC HOSE KIT - MAIN TO HD STICK - SAW

Item	Part #	Description	Qty.
1	66419 - (KIT - 663750)	HOSE, HYD, 722TC68 16-16OS-16OS-W - (SAW - “A”)	1
2	66419 - (KIT - 663750)	HOSE, HYD, 722TC68 16-16OS-16OS-W - (SAW - “B”)	1

H101-240 - ARM ASSEMBLY, FB, HD, U - (TANGUAY HD)

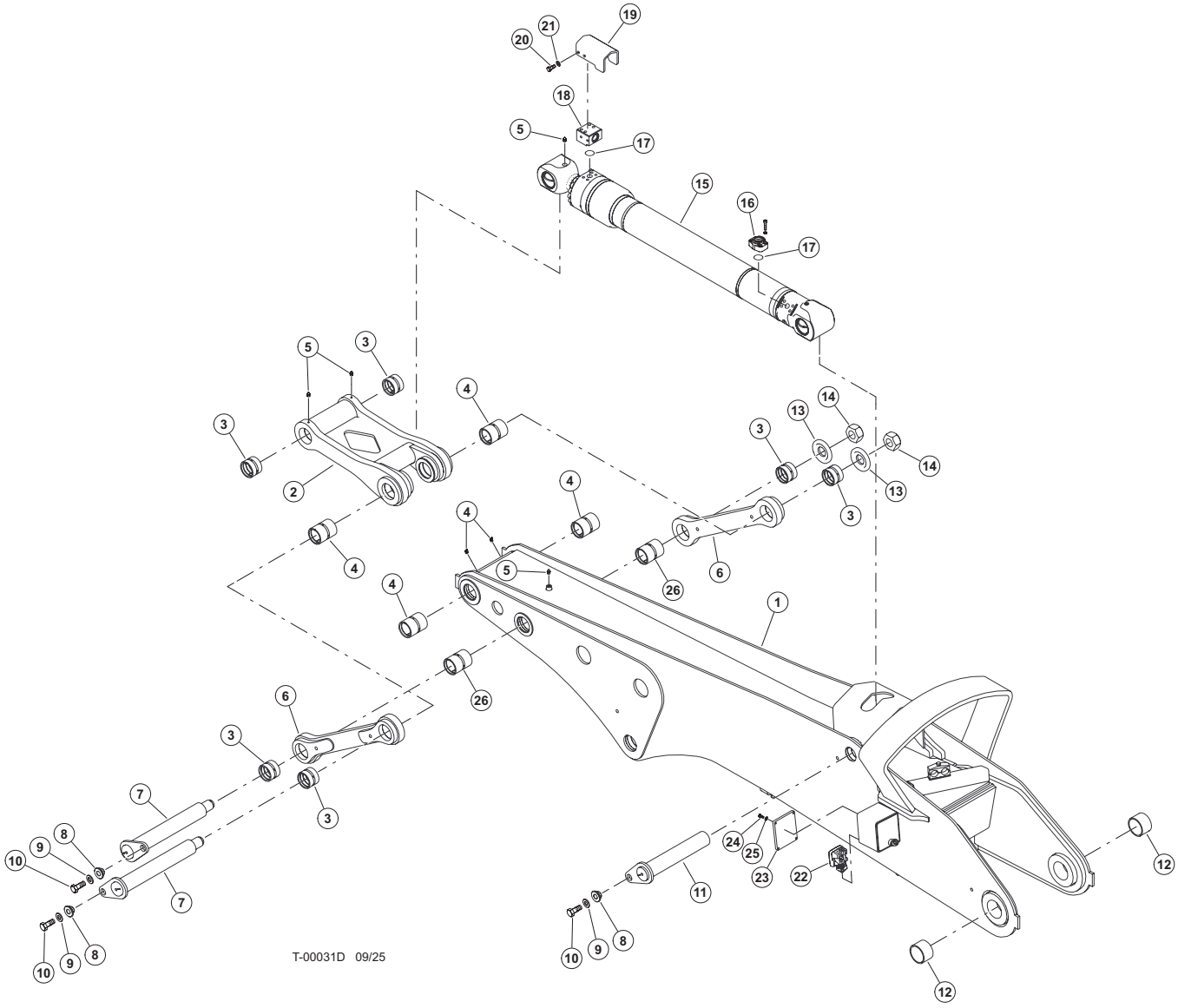

H101-240 - ARM ASSEMBLY, FB, HD, U - (TANGUAY HD)

Item	Part #	Description	Qty.
1	58116	WELDMENT, STICK BOOM HD (TANGUAY)	1
2	487650	WELDMENT, LINK BOOM TO TOOL CYL-TAIL	1
3	48303	BUSHING, 3.5 X 3.0X 2.5	6
4	484250	BUSHING, 3.5 X 3.0 X 4.5	6
5	59122	ZERK, GREASE - 1/8-27 NPTF, ST	4
6	62580	DOG BONE-POWER STICK	2
7	48310	3.0 X 20.00 PIN ASSY	2
8	18570	WASHER, PIN RETAINING	3
9	15550	WASHER, SAE FLAT - .75”	3
10	15549	BOLT - .75” X 2.0	3
11	60683	PIN, TOOL TILT CYLINDER HD	1
12	18565	BUSHING - 3.5” X 2.5”	2
13	12021	WASHER, BURNED	2
14	10728	NUT, NYLON LOCK	2
15	58101	CYLINDER, TOOL TILT - T755 WC	1
16	18397 - (KIT - 59052)	CONNECTOR, FLANGE PAD - W48-16-16U(C 62)	1
17	15377	O-RING - 1” SF (CODE 61/62)	2
18	58231	MANIFOLD, PORT BLOCK - TOOL TILT CYL.	1
19	58232	GUARD, PORT BLOCK TOOL TILT CYL	1
20	10783	BOLT - .5” X 1”	4
21	15534	WASHER, SAE FLAT - .5”	4
22	50999	LIGHT, BOOM MOUNTED - LED LAMPS	1
23	53081	LEXAN, BOOM LIGHT COVER	1
24	15576	BOLT - .25” X 1.00”	4
25	10757	WASHER, SAE FLAT - .25”	4

H100-00880 - MAIN BOOM PIPING - CONTROL FALL PROCESSOR

NOTE: HYDRAULIC FITTINGS GET 545 LOCTITE™

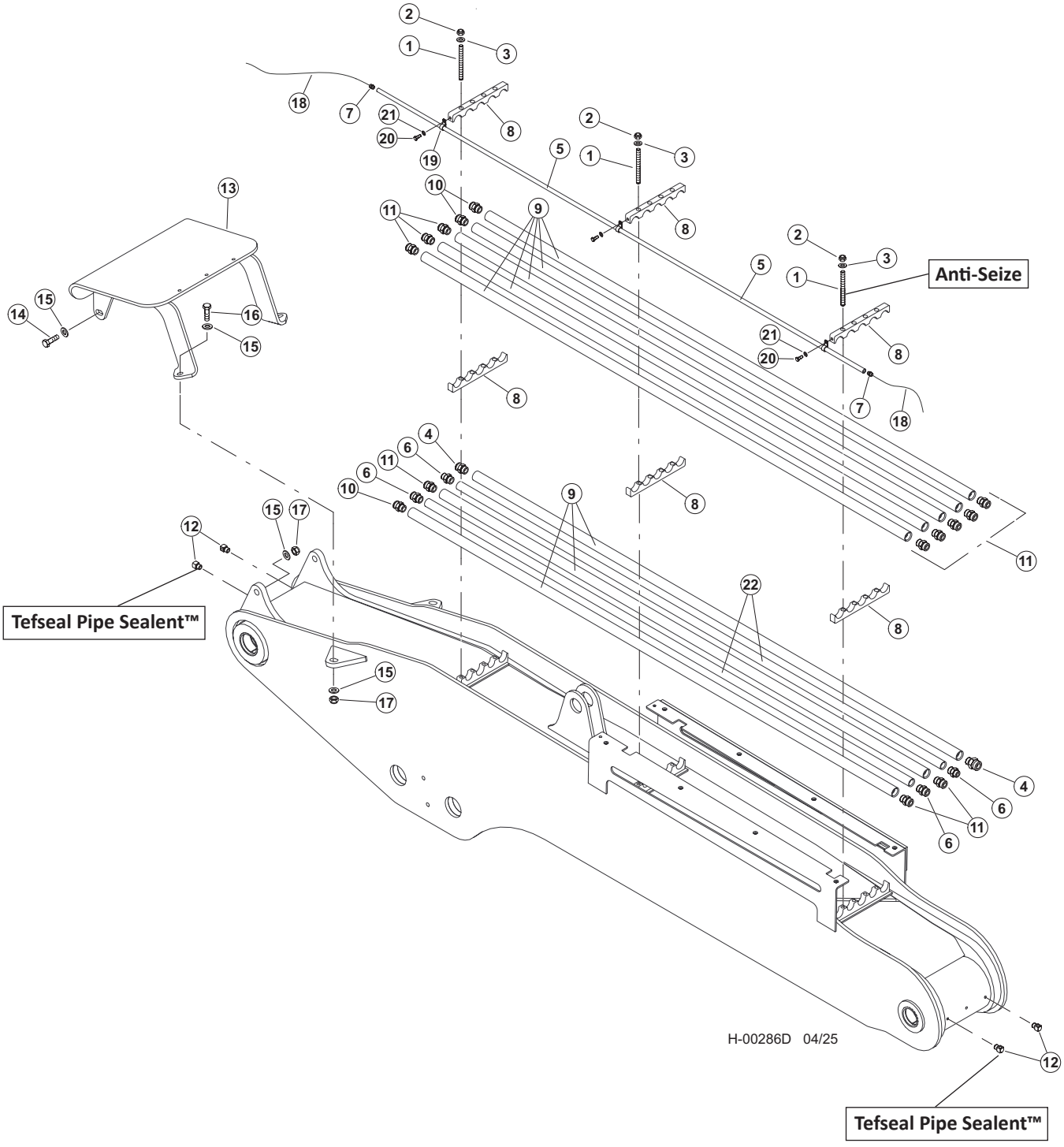

H100-00880 - MAIN BOOM PIPING - CONTROL FALL PROCESSOR

Item	Part #	Description	Qty.
1	15672	STUD - .625” X 6.25” **ANTI-SEIZE™**	12
2	15563	NUT, NYLOCK - .625”	12
3	10771	WASHER, SAE FLAT - .625	12
4	17063 - (KIT - 665410)	CONNECTOR, STR - FF1852T-2016S	3
5	53116	TUBELINE - .3/8” X 108” - BLACK PIPE	1
6	52078 - (KIT - 665410)	CONNECTOR, STR - 10-16 F50LO-S	4
7	51878 - (KIT - 665410)	CONNECTOR, STR - MALE PIPE (6-6 FLO-S)	2
8	52155	CLAMP, SADDLE - DRILLED (5-1” TUBES)	6
9	51833	TUBELINE - 1” X 108” FB MAIN	8
10	15226 - (KIT - 665410)	CONNECTOR, STR - FF1852T-1216S	3
11	15225 - (KIT - 665410)	CONNECTOR, STR - FF1852T-1616S	10
12	22281	ELBOW, 1/8-27 NPTF(M), 1/8-17 NPTF(F),90 **TEFSEAL PIPE SEALENT™**	4
13	53927	GUARD, HOSE - MAIN BOOM (FB)	1
	53927	GUARD, HOSE - MAIN BOOM (FB)(53919 BOOM)	1
14	10840	BOLT - .75” X 3”	2
15	10806	WASHER, 3/4” USS TRU-TORQ	8
16	58398	BOLT - .75” X 2.75”	2
17	10817	NUT, 3/4-10 UNC	4
18	58380	CABLE	30’
	53218	WIRE - PROCESSING HEAD CABLE (7 WIRES)	40’
19	53265	CLAMP, CUSHIONED LOOP - 5/8” (BOOM)	3
20	23264	BOLT - .25” X .5”	3
21	10757	WASHER, SAE FLAT - .25”	3
22	51815	TUBELINE - .5” X 108”	2

H100-00890 - STICK BOOM PIPING - CONTROL FALL PROCESSOR

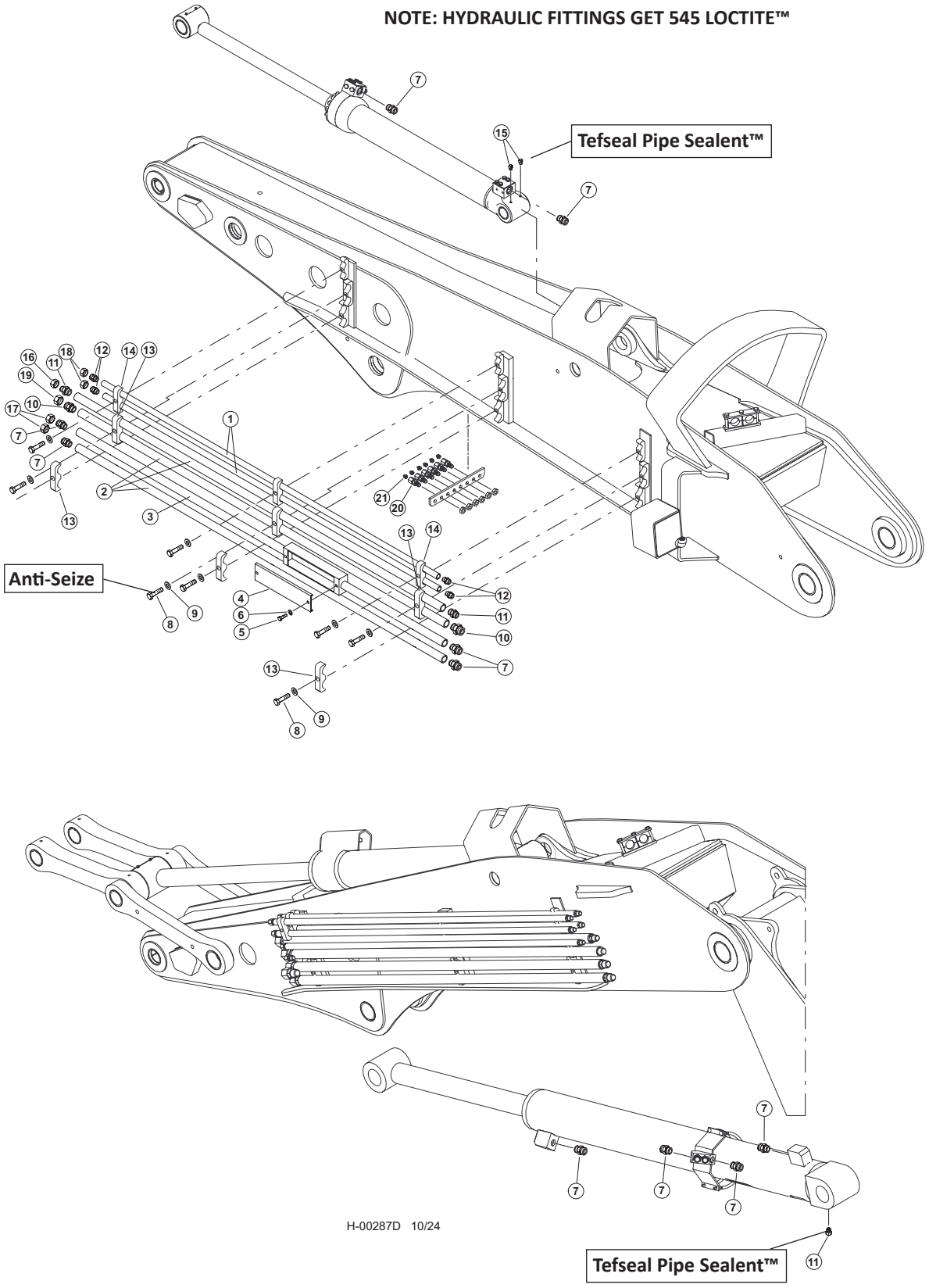

H100-00890 - STICK BOOM PIPING - CONTROL FALL PROCESSOR

Item	Part #	Description	Qty.
1	16513	TUBELINE - .5” X 80”	2
2	16506	TUBELINE - 1” X 84”	3
3	60264	TUBELINE, J-BOX	1
	19681	TUBELINE - 1” X 48”	1
	19497	TUBELINE - 1” X 24”	1
4	53649	BOX JUCTION - COVER	1
5	23264	BOLT - .25” X .5”	2
6	10757	WASHER, FLAT - .25”	2
7	15525 - (KIT - 57403)	CONNECTOR, STR - FF1852T-1616S	6
8	15517	BOLT - .625” X 2.5” **ANTI -SEIZE**	9
9	10771	WASHER, FLAT - .625”	9
10	17063 - (KIT - 57403)	CONNECTOR, STR - FF1852T-2016S	2
11	15226 - (KIT - 57403)	CONNECTOR, STR - FF1852T-1216S **TEFSEAL PIPE SEALENT™**	2
12	15117 - (KIT - 57403)	CONNECTOR, STR - FF1852T-0808S	4
13	12447	CLAMP, SADDLE TOP TUBE - 1” & 1”	6
14	15272	CLAMP, SADDLE TOP TUBE - .5” & .5”	3
15	57623 - (KIT - 57403)	ELBOW, 1/8 FEMALE/FEMALE DD-S **TEFSEAL PIPE SEALENT™**	3
16	15437 - (KIT - 57403)	CAP - FF9863-12S	1
17	15436 - (KIT - 57403)	CAP - FF9863-16S	2
18	15434 - (KIT - 57403)	CAP - FF9863-08S	2
19	17075 - (KIT - 57403)	CAP - FF9863-20S	1
20	15658 - (KIT - 57403)	CONNECTOR, STR BULKHEAD - 2239-2-4S	6
21	59122	ZERK, GREASE - 1/8-27 NPTF, ST	6

H100-00900 - CONTROL FALL PROCESSOR PIPING - PRESSURE, RETURN, CASE DRAIN & LOAD SENSE - (K220/L90 VALVE) -VALVE TO BOOM

NOTE: HYDRAULIC FITTINGS GET 545 LOCTITE™

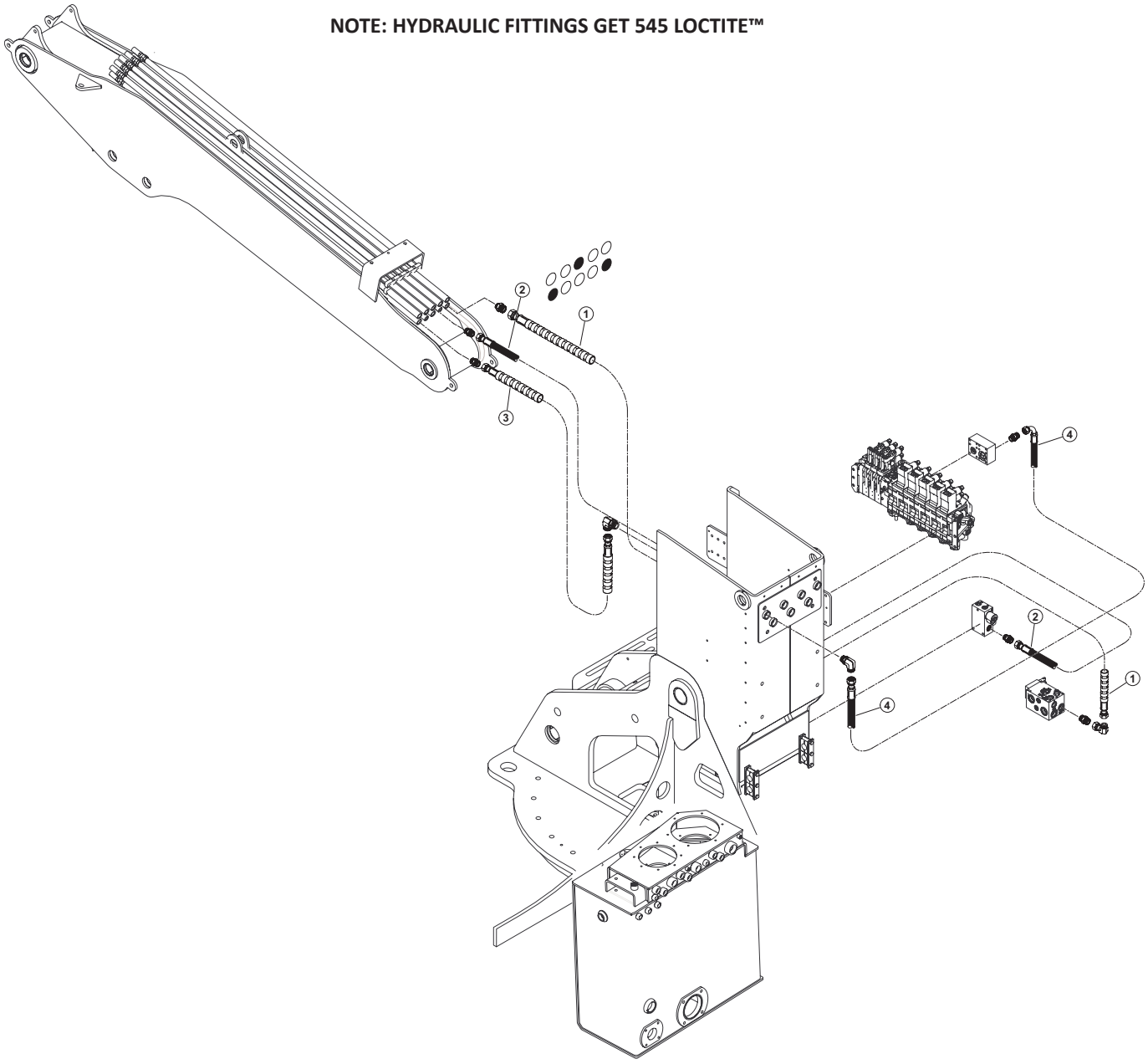

H-00080D 05/24

Item	Part #	Description	Qty.
1	57977 - (KIT)	HOSE ASSY - 187TC58 20-20JS-20OS-SW - (ATTACHMENT RETURN)	1
2	57977 - (KIT)	HOSE ASSY - 187TC56 12-12OS-12OS-W - (ATTACHMENT CASE DRAIN)	1
3	57977 - (KIT)	HOSE ASSY - 787TC39 16-16OS-16OS-SW - (ATTACHMENT PRESSURE)	1
4	(SEE DESCRIPTION)	HOSE ASSY - 787TC32 16-16OS-16O9 - (ATTACHMENT PRESSURE)	1

H-2258300, 2258400 - CONTROL FALL PROCESSOR PIPING - SAW PRESSURE, RETURN, CASEDRAIN & LOAD SENSE

NOTE: HYDRAULIC FITTINGS GET 545 LOCTITE™

NOTE: APPLY GREASE TO O-RINGS

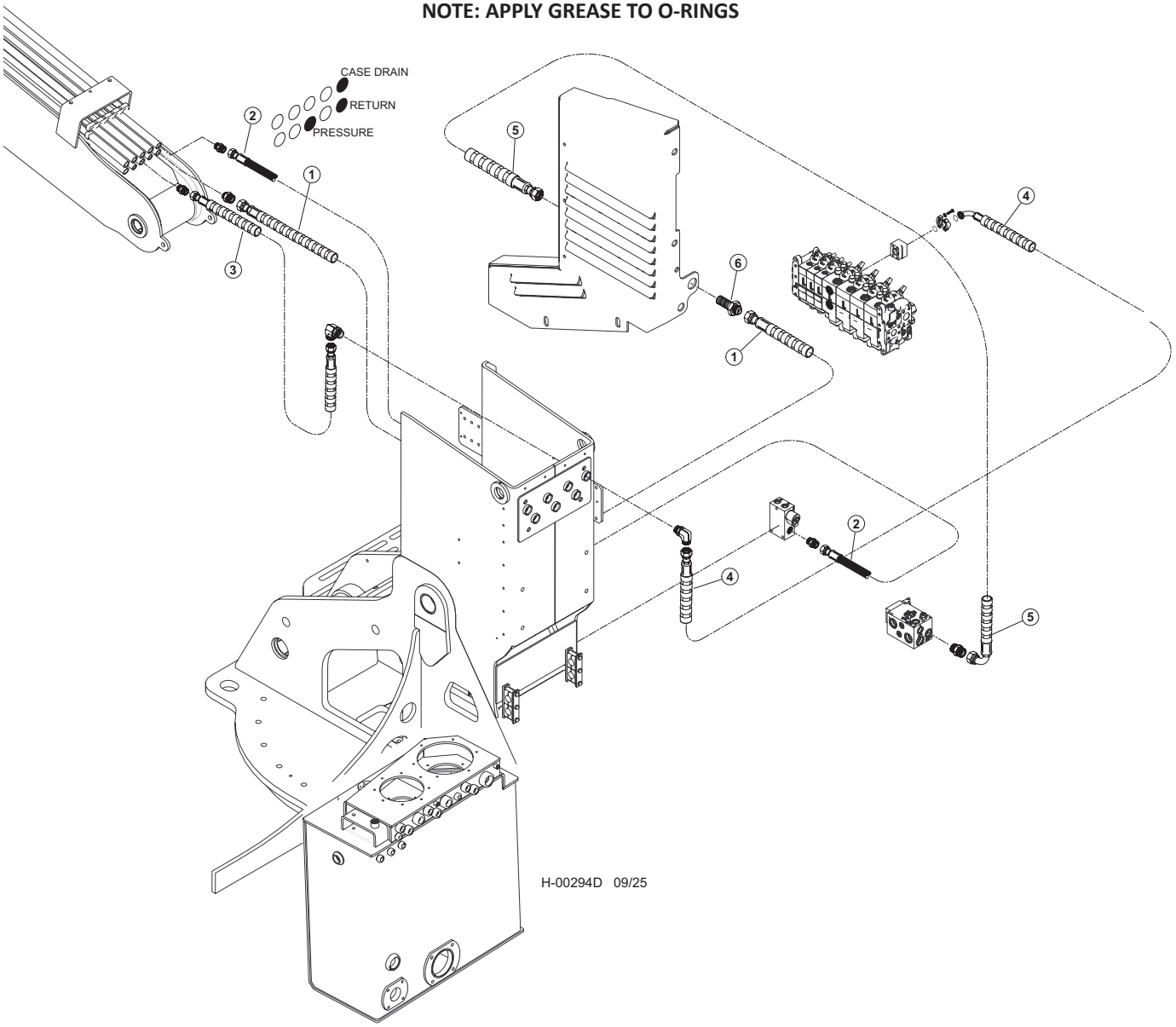

Item	Part #	Description	Qty.
1	689410 - (664481 - KIT)	HOSE, HYD, 187TC44 20-20JS-20OS-SW - **(DISC SAW RETURN)**	1
2	66379 - (664480 - KIT)	HOSE, HYD, 187TC54 12-12OS-12OS-W - **(ATTACHMENT CASE DRAIN)**	1
3	65885 - (664480 - KIT)	HOSE, HYD, 787TC40 16-16OS-16OS-SW - **(VALVE PRESSURE)**	1
4	65640 - (65813 - KIT)	HOSE, HYD, 787TC46 16-16OS-20PH4-SW - **(VALVE PRESSURE)**	1
5	689400 - (664481 - KIT)	HOSE, HYD, 187TC44 20-20JS-20J9-SW - **(RETURN)**	1
6	57491- (57950- KIT)	FITTING, 20 WTX-WLN-S	1

H100-00920 - CONTROL FALL PROCESSOR PIPING - TOOL TILT (K220/L90 VALVE) MAIN VALVE TO BOOM

NOTE: HYDRAULIC FITTINGS GET 545 LOCTITE™

NOTE: APPLY GREASE TO O-RINGS

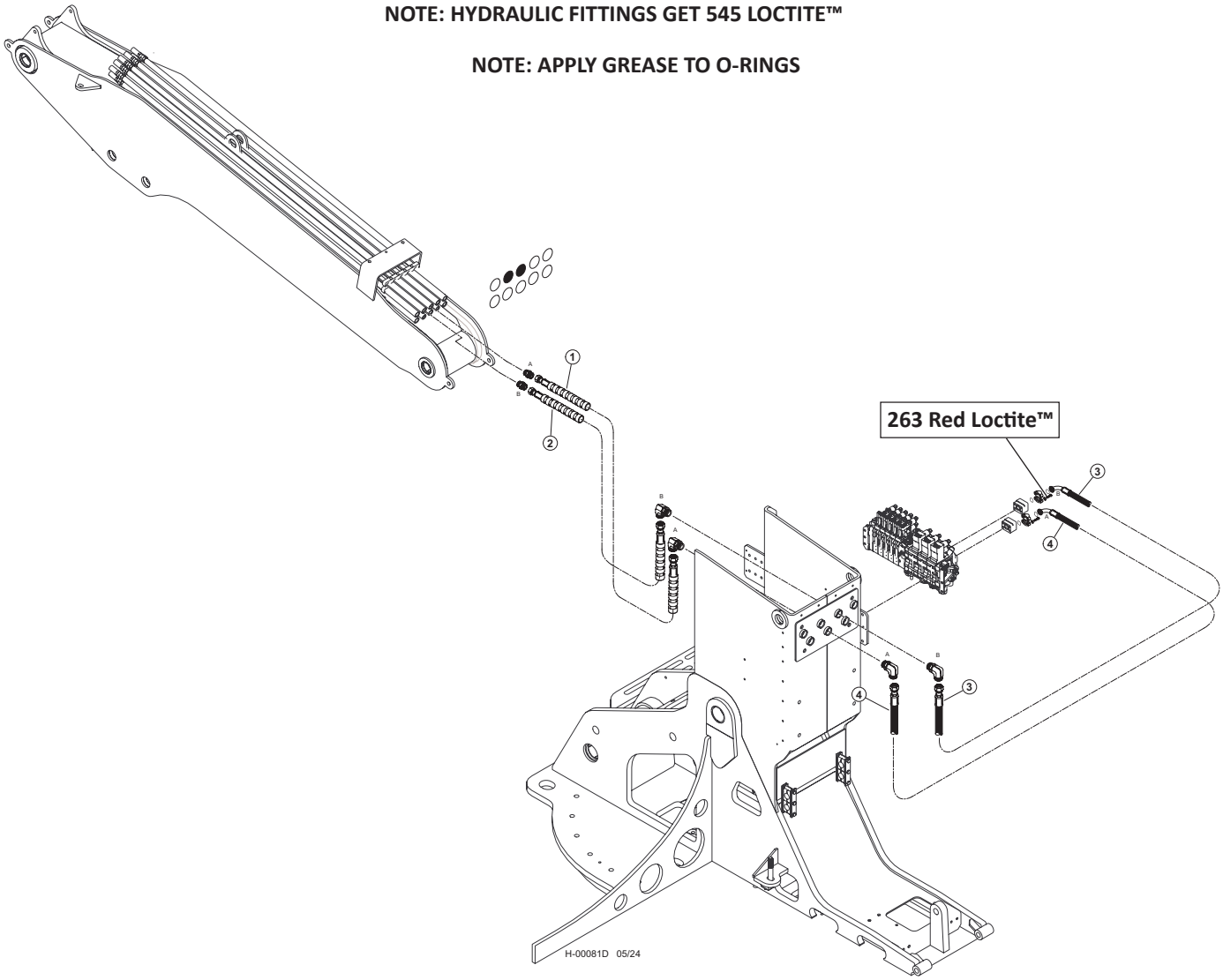

Item	Part #	Description	Qty.
1	(SEE DESCRIPTION)	HOSE ASSY - 722TC40 16-16OS-16OS-SW - (TOOL CYLINDER “A”)	1
2	(SEE DESCRIPTION)	HOSE ASSY - 722TC39 16-16OS-16OS-SW - (TOOL CYLINDER “B”)	1
3	(SEE DESCRIPTION)	HOSE ASSY - 722TC38 16-16OS-16PA9 - (TOOL CYLINDER “B”)	1
4	(SEE DESCRIPTION)	HOSE ASSY - 722TC37 16-16OS-16PA9 - (TOOL CYLINDER “A”)	1

H200-00360 - CONTROL FALL PROCESSOR PIPING - TOOL TILT (W450/W300 VALVE) MAIN VALVE TO BOOM

NOTE: HYDRAULIC FITTINGS GET 545 LOCTITE™

NOTE: APPLY GREASE TO O-RINGS

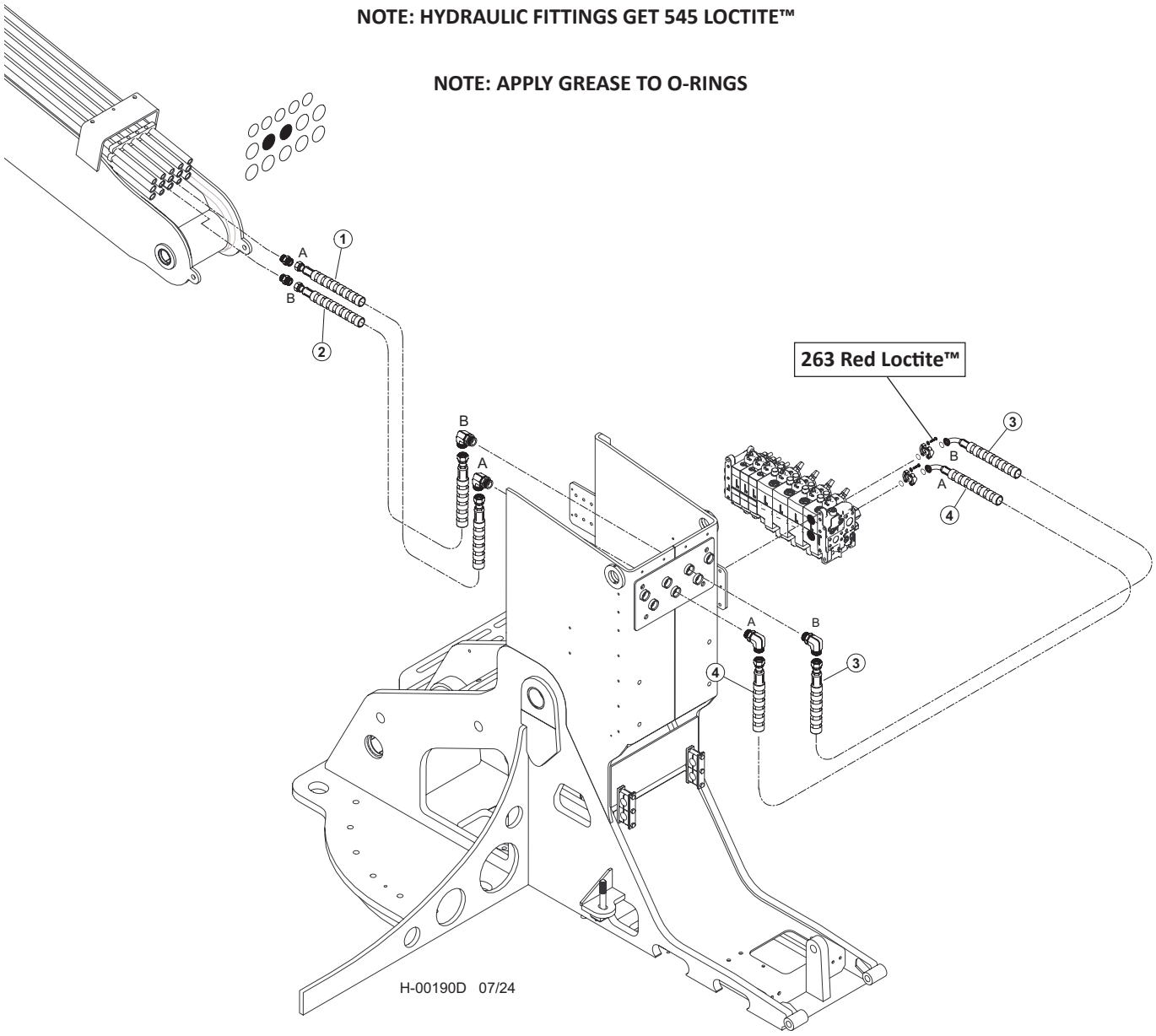

Item	Part #	Description	Qty.
1	65885 - (664480 - KIT)	HOSE, HYD, 787TC40 16-16OS-16OS-SW **("A" PORT - CHIMNEY TO BOOM)**	1
2	65884 - (664480 - KIT)	HOSE, HYD, 787TC39 16-16OS-16OS-SW **("B" PORT - CHIMNEY TO BOOM)**	1
3	65858 - (65813 - KIT)	HOSE, HYD, 787TC36.5 16-16OS-20PH9-SW **("B" PORT - VALVE TO CHIMNEY)**	1
4	65640 - (65813 - KIT)	HOSE, HYD, 787TC36 16-16OS-20PH9-SW **("A" PORT - VALVE TO CHIMNEY)**	1

H100-00930 - CONTROL FALL PROCESSOR PIPING - STICK BOOM CYLINDER (K220/L90 VALVE) - MAIN VALVE TO BOOM

NOTE: HYDRAULIC FITTINGS GET 545 LOCTITE™

NOTE: APPLY GREASE TO O-RINGS

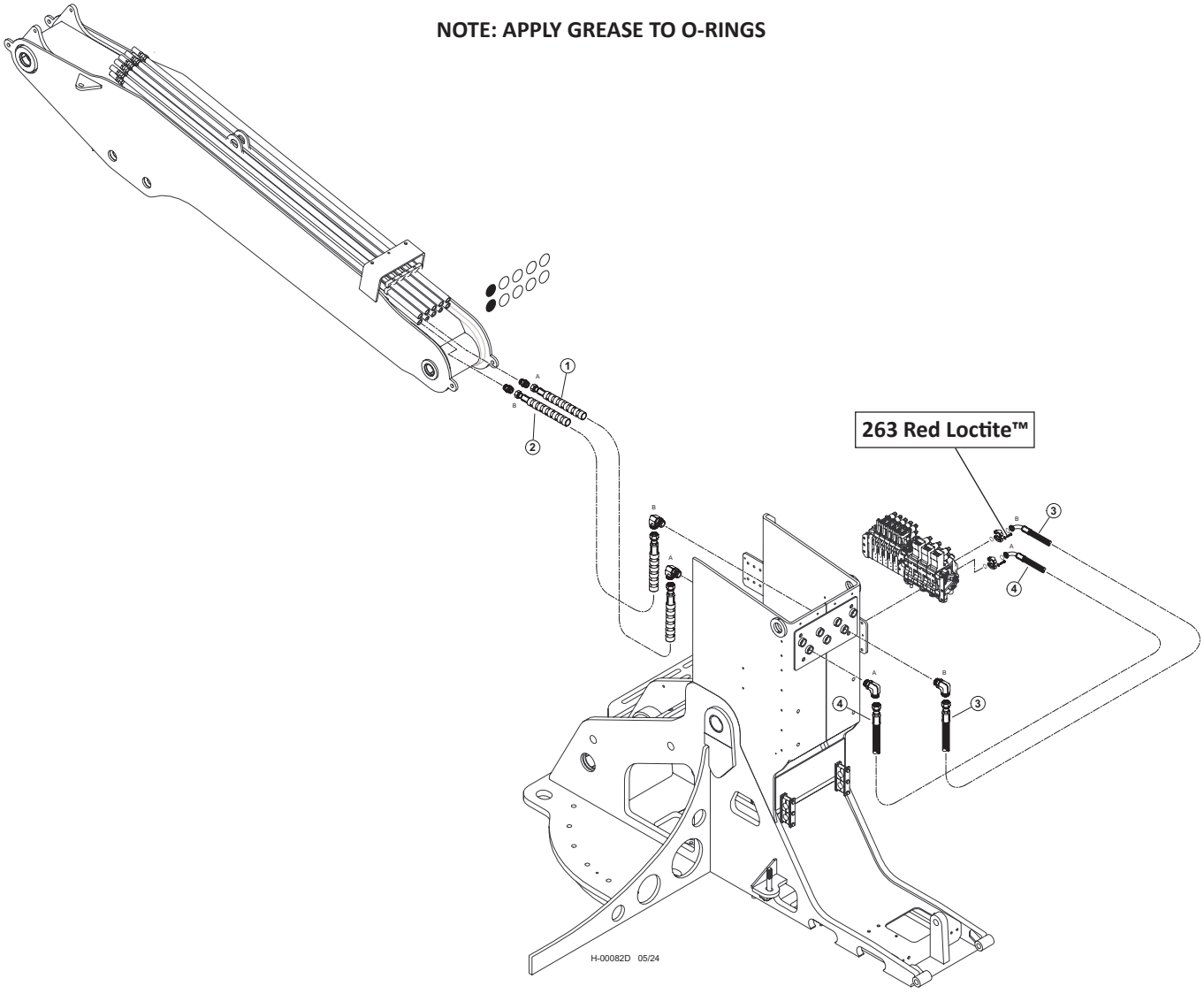

Item	Part #	Description	Qty.
1	(SEE DESCRIPTION)	HOSE ASSY - 722TC39 16-16OS-16OS-SW - (STICK CYLINDER “A”)	1
2	(SEE DESCRIPTION)	HOSE ASSY - 722TC39 16-16OS-16OS-SW - (STICK CYLINDER “B”)	1
3	(SEE DESCRIPTION)	HOSE ASSY - 722TC40 16-16OS-16PA9 - (STICK CYLINDER “B”)	1
4	(SEE DESCRIPTION)	HOSE ASSY - 722TC39 16-16OS-16PA9 - (STICK CYLINDER “A”)	1

H200-00370 - CONTROL FALL PROCESSOR PIPING - STICK BOOM CYLINDER (W450/W300 VALVE)

NOTE: HYDRAULIC FITTINGS GET 545 LOCTITE™

NOTE: APPLY GREASE TO O-RINGS

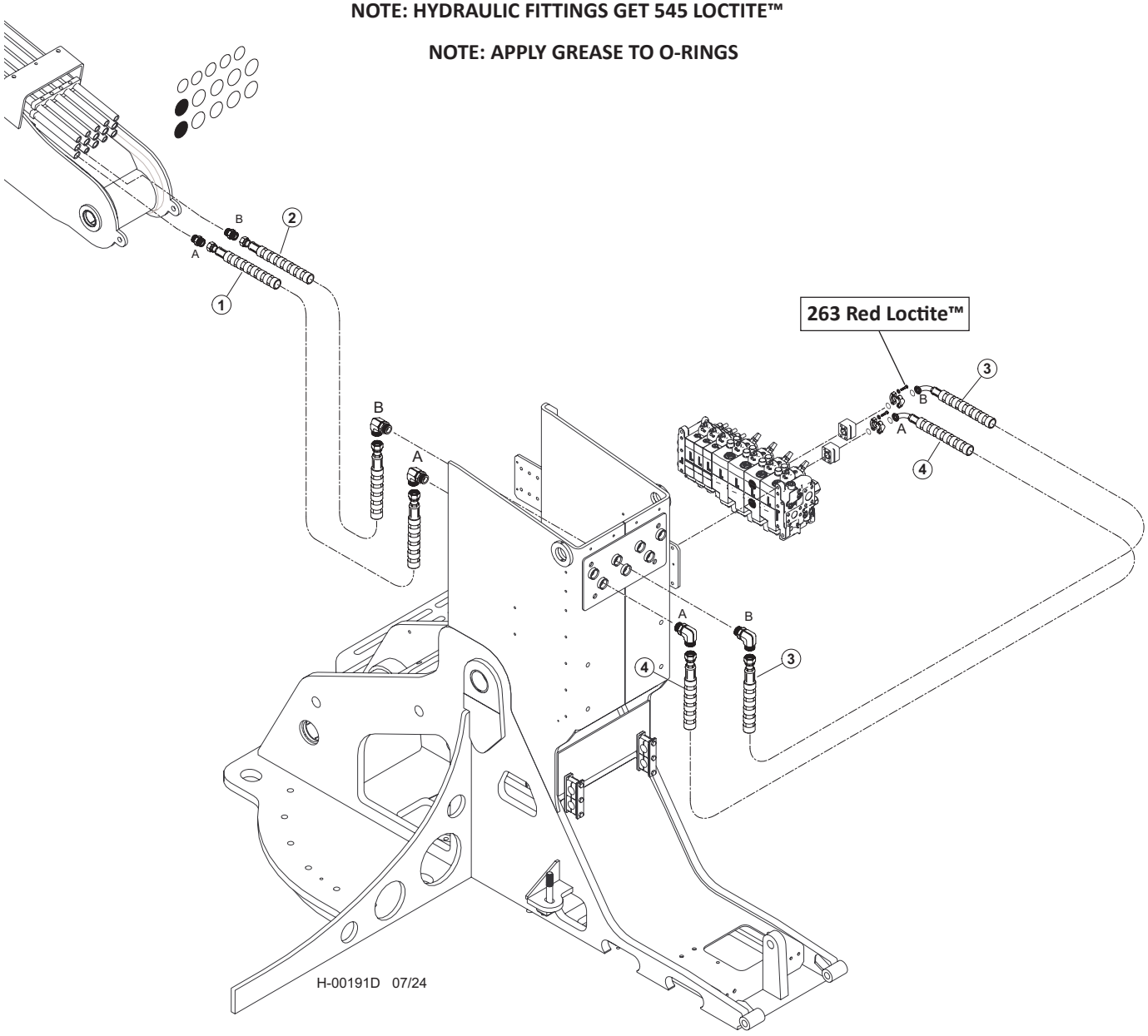

Item	Part #	Description	Qty.
1	65885 - (65813 - KIT)	HOSE, HYD, 787TC40 16-16OS-16OS-SW **("A" PORT - CHIMNEY TO BOOM)**	1
2	65884 - (65813 - KIT)	HOSE, HYD, 787TC39 16-16OS-16OS-SW **("B" PORT - CHIMNEY TO BOOM)**	1
3	65859 - (664480 - KIT)	HOSE, HYD, 787TC36.5 16-16OS-20PH9-SW **("B" PORT - VALVE TO CHIMNEY)**	1
4	65615 - (664480 - KIT)	HOSE, HYD, 787TC36 16-16OS-20PH9-SW **("A" PORT - VALVE TO CHIMNEY)**	1

H200-00940 - CONTROL FALL PROCESSOR PIPING - MAIN BOOM (K220/L90 VALVE)
MAIN VALVE TO BOOM

NOTE: HYDRAULIC FITTINGS GET 545 LOCTITE™

NOTE: APPLY GREASE TO O-RINGS

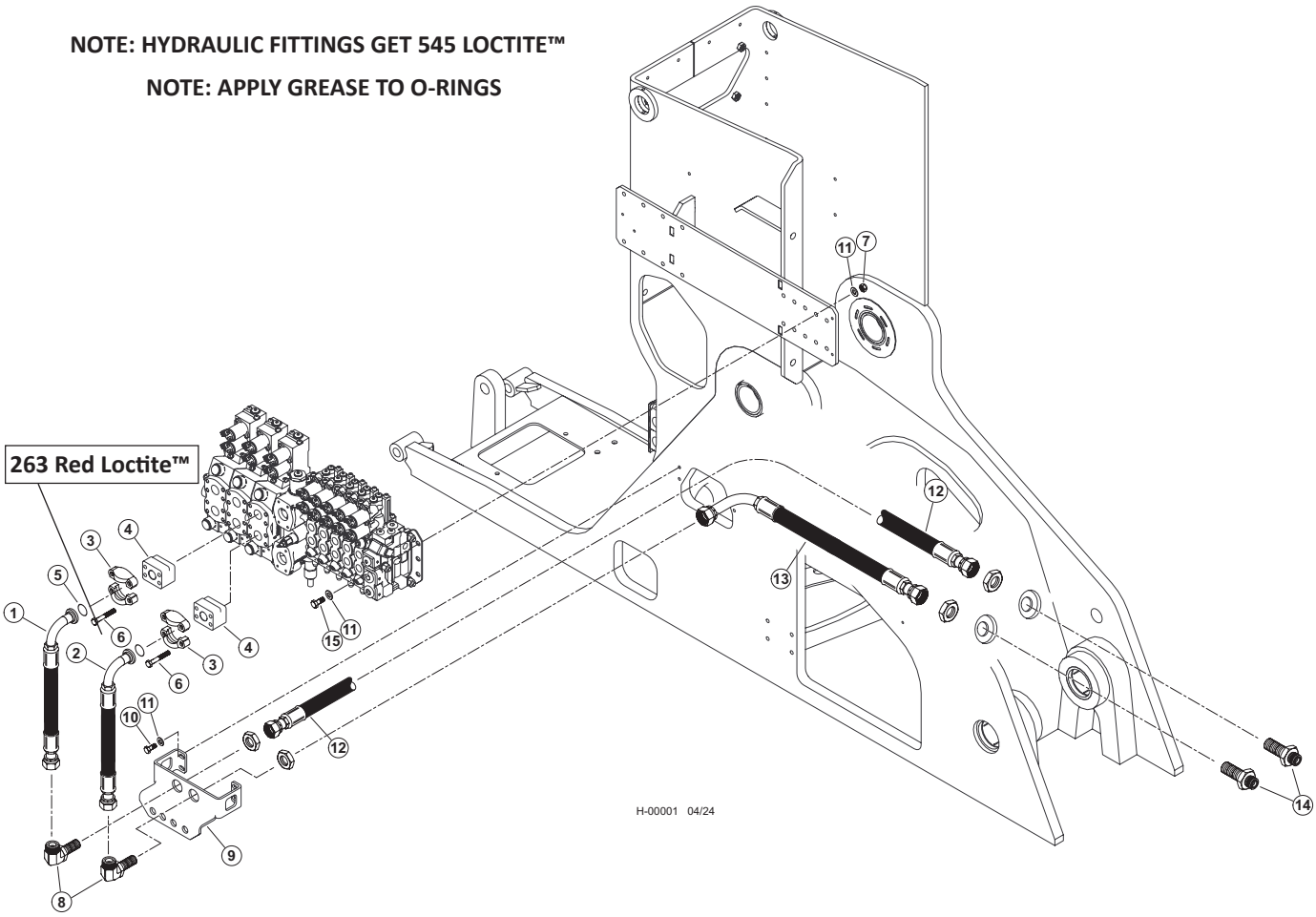

Item	Part #	Description	Qty.
1	59741 - (KIT)	HOSE ASSY - 787TC35.5 16-16OS-16PA9 - (BOOM “B”)	1
2	59741 - (KIT)	HOSE ASSY - 787TC31 16-16OS-16PA9 - (BOOM “A”)	1
3	15111	KIT, SPLIT FLANGE CODE 61 1 INCH	2
4	46248	MANIFOLD, VALVE BLOCK SAE 1” CODE 62	2
5	15377	O-RING - 1” SF	2
6	55664	BOLT, ALLEN HEAD - 10MM-1.5P X 80MM **263 RED LOCTITE™**	8
7	10813	NUT, LOCK - .375”	4
8	53680	FITTING, BULKHEAD UNION ELBOW 16 WELO-WN	2
9	60559	BULHEAD, FRONT - TM	1
10	15542	BOLT - .375” X .75”	4
11	15528	WASHER, SAE FLAT - .375”	12
12	59741 - (KIT)	HOSE ASSY - 787TC43 16-16OS-16OS **(MAIN BOOM CYLINDER BASE END BULKHEAD TO BULKHEAD PLATE)**	1
13	59741 - (KIT)	HOSE ASSY - 787TC30 16-16OS-16O9L **(MAIN BOOM CYLINDER ROD END BULKHEAD TO BULKHEAD PLATE)**	1
14	54316	ELBOW, BULKHEAD UNION 45DEG #16	2
15	10402	BOLT - .375” X 1.25”	4

H200-00380 - CONTROL FALL PROCESSOR PIPING - MAIN BOOM (W450/W300 VALVE)

NOTE: HYDRAULIC FITTINGS GET 545 LOCTITE™

NOTE: APPLY GREASE TO O-RINGS

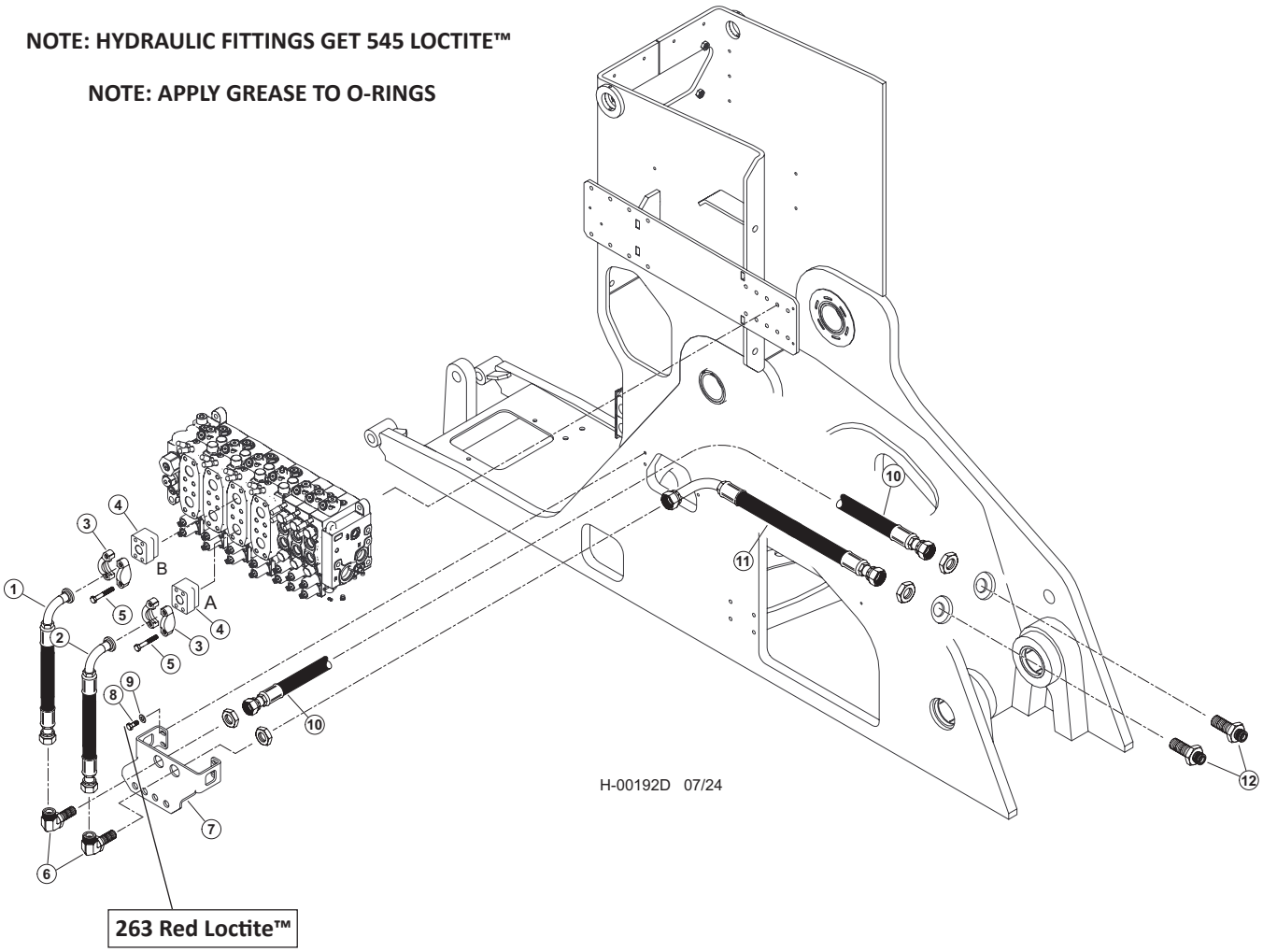

Item	Part #	Description	Qty.
1	65460 - (65812- KIT)	HOSE, HYD, 787TC36 16-16OS-20PH9-SW **- (BOOM "B")**	1
2	65459 - (65812 - KIT)	HOSE, HYD, 787TC32 16-16OS-20PH9-SW **- (BOOM "A")**	1
3	15111	KIT, SPLIT FLANGE CODE 61 1 INCH	2
4	65458	ANCHOR-ASX-20GP STANDOFF	2
5	55664	BOLT, ALLEN HEAD - 10MM-1.5P X 80MM	8
6	53680	FITTING, BULKHEAD UNION ELBOW 16 WELO-WN	4
7	60559	BULHEAD, FRONT - TM	2
8	10402	BOLT - .375" X 1.25" **263 RED LOCTITE™**	2
9	15528	WASHER, SAE FLAT - .375"	2
10	65803 - (65799 - KIT)	HOSE, HYD, 787TC43 16-16OS-16OS	12
		(MAIN BOOM CYLINDER BASE END BULKHEAD TO BULKHEAD PLATE)	1
11	65804 - (65799 - KIT)	HOSE, HYD, 787TC30 16-16OS-16O9L	
		(MAIN BOOM CYLINDER ROD END BULKHEAD TO BULKHEAD PLATE)	1
12	54316	ELBOW, BULKHEAD UNION 45DEG #16	2

H100-00950 - CONTROL FALL PROCESSOR PIPING - ROTATE (K220/L90 VALVE) MAIN VALVE TO BOOM

NOTE: HYDRAULIC FITTINGS GET 545 LOCTITE™

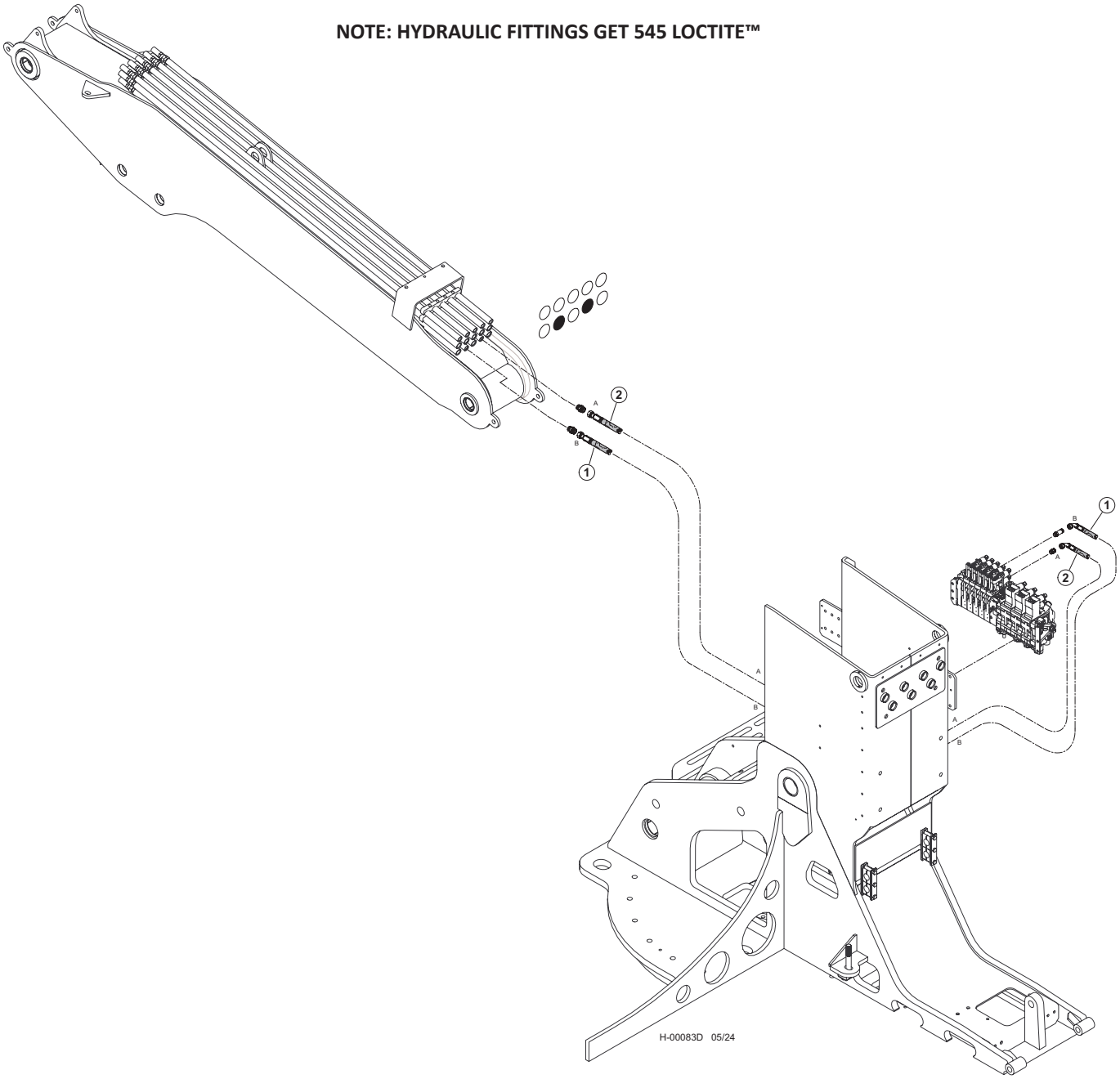

Item	Part #	Description	Qty.
1	57977 - (KIT)	HOSE ASSY - 722TC61 10-10OS-10O4-W - (ROTATE “B”)	1
2	57977 - (KIT)	HOSE ASSY - 722TC60 10-10OS-10O4-W - (ROTATE “A”)	1

H200-00390 - CONTROL FALL PROCESSOR PIPING - ROTATE (W450/W300 VALVE) MAIN VALVE TO BOOM

NOTE: HYDRAULIC FITTINGS GET 545 LOCTITE™

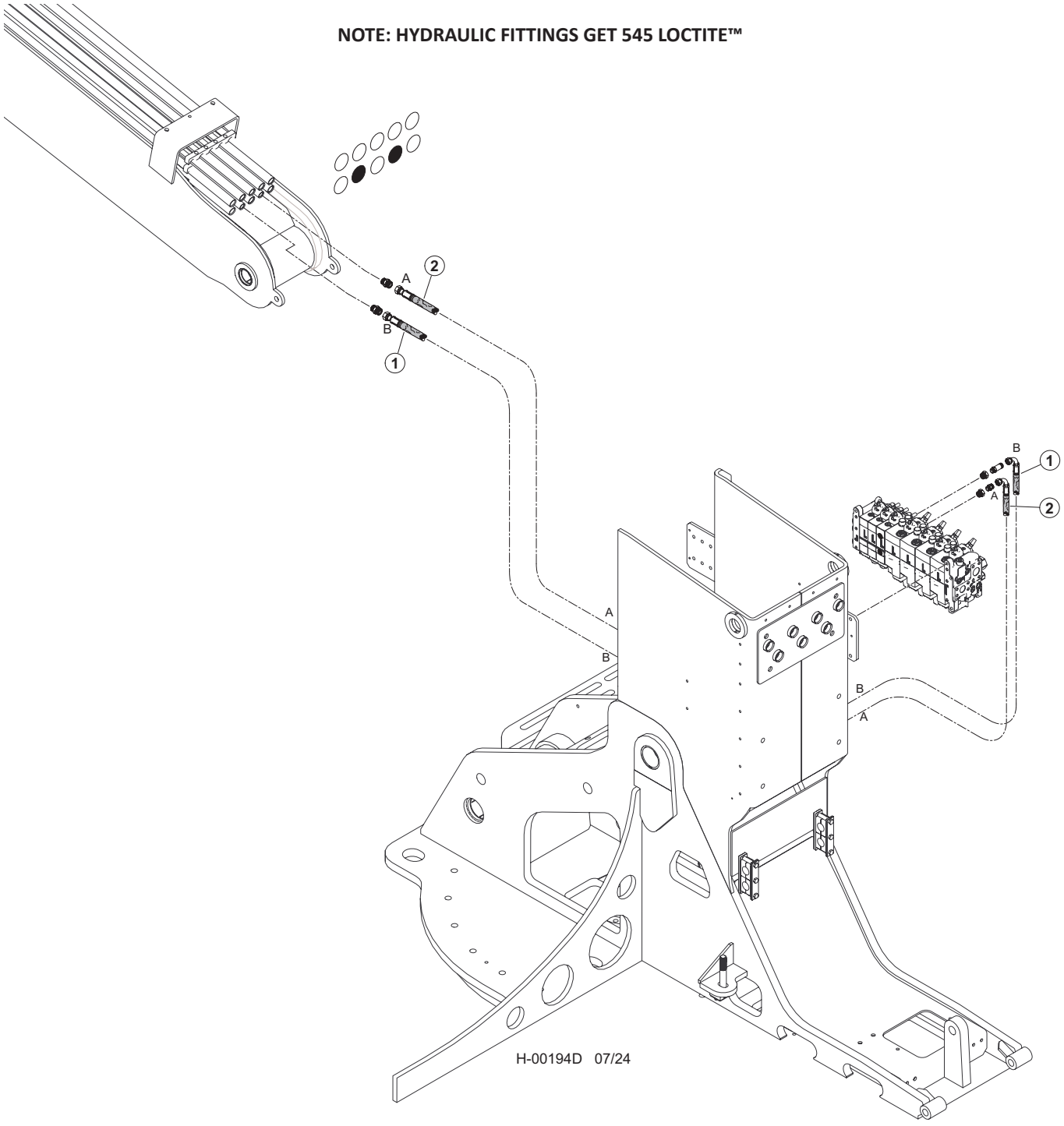

Item	Part #	Description	Qty.
1	65863 - (65856 - KIT)	HOSE, HYD, 722TC65.5 10-10OS-10O4-W - **(LATERAL TILT "B")**	1
2	65863 - (65856 - KIT)	HOSE, HYD, 722TC65.5 10-10OS-10O4-W - **(LATERAL TILT "A")**	1

H100-00960 - CONTROL FALL PROCESSOR PIPING - CAB LEVEL (K220/L90 VALVE)
MAIN VALVE TO BOOM

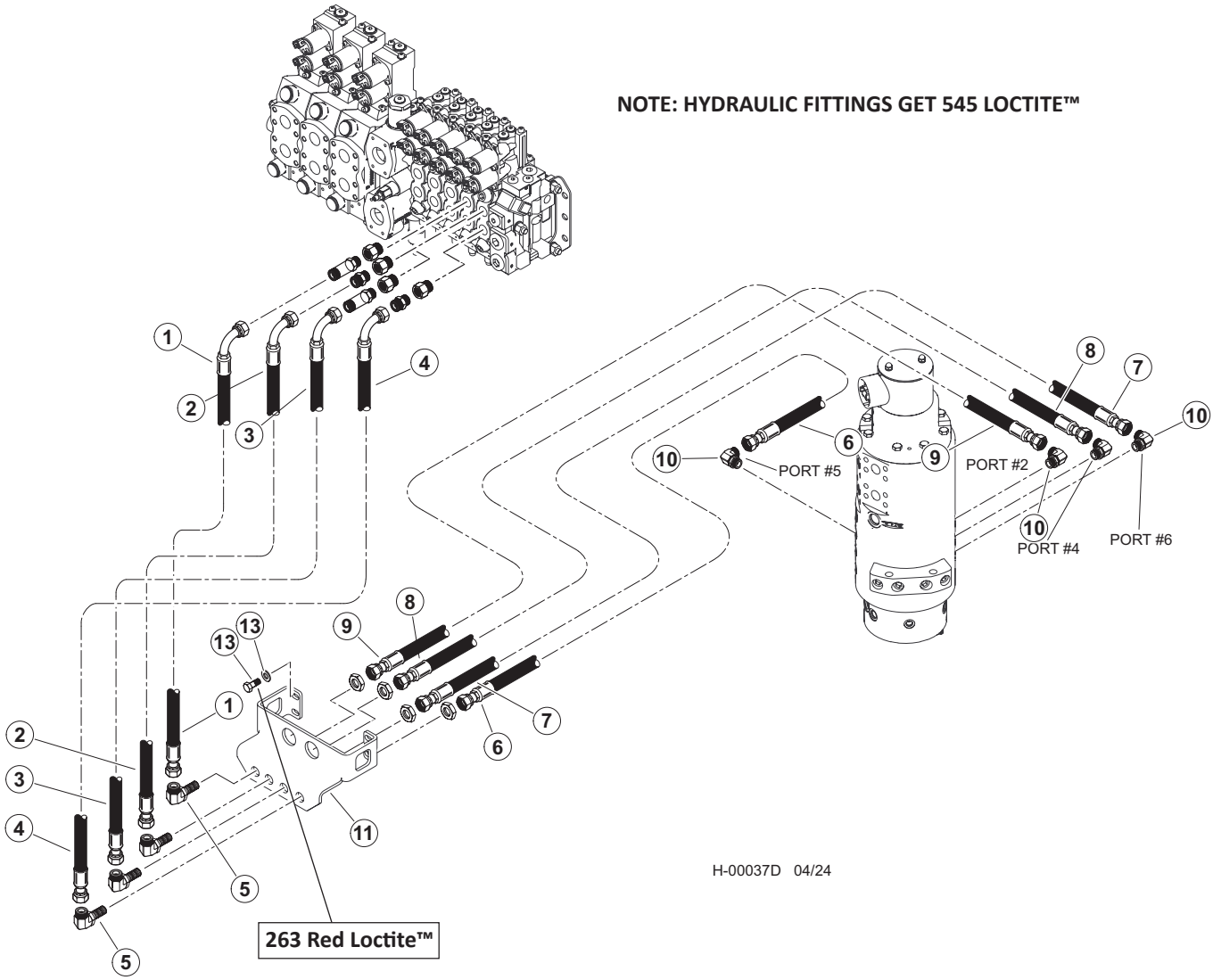

Item	Part #	Description	Qty.
1	57945 - (KIT)	HOSE ASSY - 787TC42 08-08OS-0809 - (VALVE PORT “B” TO BULKHEAD)	1
2	57945 - (KIT)	HOSE ASSY - 787TC42 08-08OS-0809 - (VALVE PORT “B” TO BULKHEAD)	1
3	57945 - (KIT)	HOSE ASSY - 787TC39 08-08OS-0809 - (VALVE PORT “A” TO BULKHEAD)	1
4	57945 - (KIT)	HOSE ASSY - 787TC39 08-08OS-0809 - (VALVE PORT “A” TO BULKHEAD)	1
	57947	KIT, FITTING TRACK LEVEL-D SERIES	1
5	24187	ELBOW, 90 BULKHEAD - 855BH-TT-08	4
6	57945 - (KIT)	HOSE ASSY - 787TC30 08-08OS-080S - (BULKHEAD TO PORT #5 ON ROT MAN)	1
7	57945 - (KIT)	HOSE ASSY - 787TC40 08-08OS-080S - (BULKHEAD TO PORT #6 ON ROT MAN)	1
8	57945 - (KIT)	HOSE ASSY - 787TC41.5 08-08OS-080S - (BULKHEAD TO PORT #4 ON ROT MAN)	1
9	57945 - (KIT)	HOSE ASSY - 787TC44 08-08OS-080S - (BULKHEAD TO PORT #2 ON ROT MAN)	1
10	16360	ELBOW, 90 - FF1868T-0808S	4
11	60559	BULHEAD, FRONT - TM	1
12	15542	BOLT - .375” X .75”	2
13	15528	WASHER, SAE FLAT - .375” OR 3/8” **263 RED LOCTITE™**	2

H200-00400 - CONTROL FALL PROCESSOR PIPING - CAB LEVEL (W450/W300 VALVE)
MAIN VALVE TO BOOM

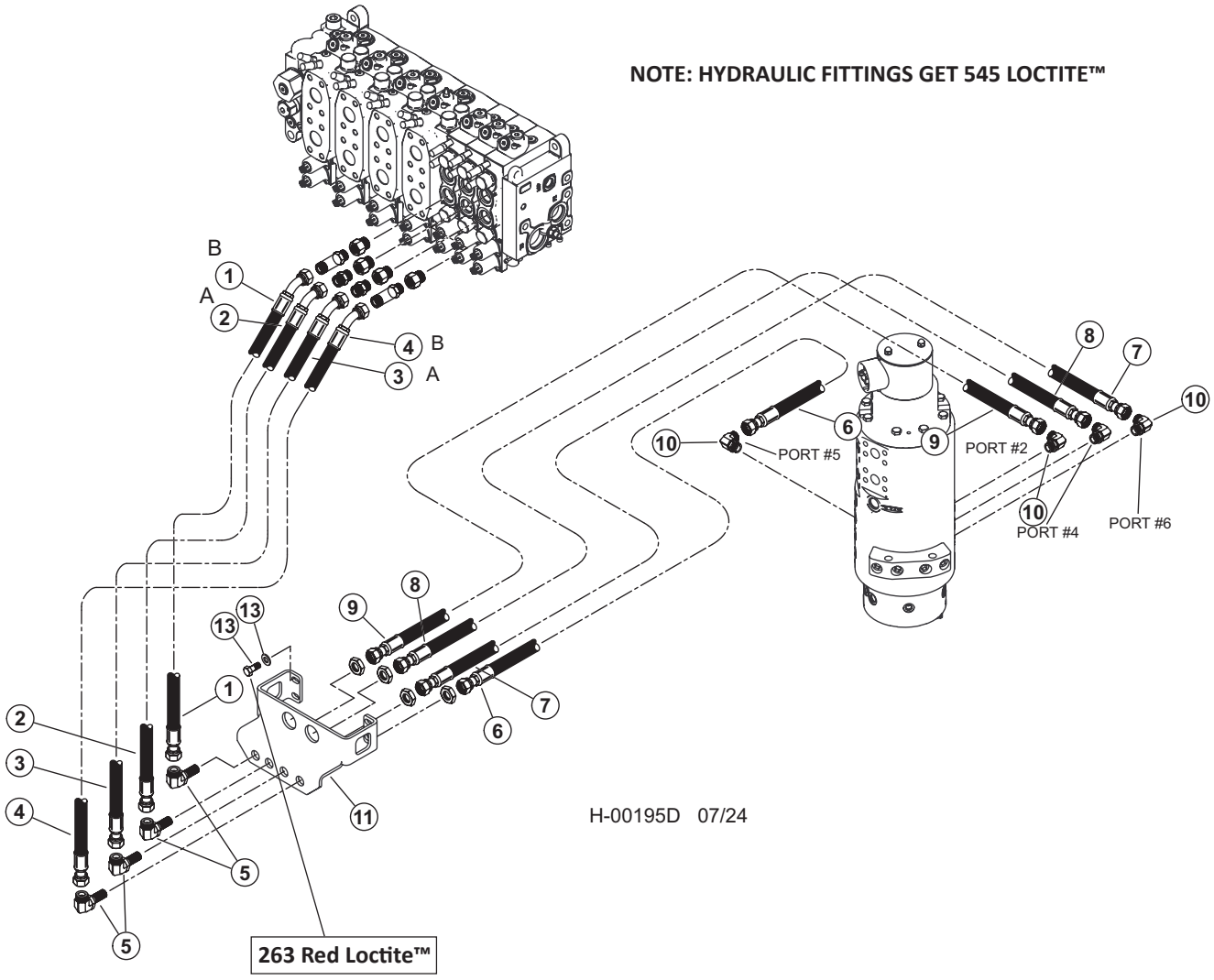

Item	Part #	Description	Qty.
1	65621 - (65619 - KIT)	HOSE, HYD, 787TC45 08-08OS-08O9 - **(VALVE PORT "B" TO BULKHEAD)**	1
2	65621 - (65619 - KIT)	HOSE, HYD, 787TC45 08-08OS-08O9 - **(VALVE PORT "B" TO BULKHEAD)**	1
3	65620 - (65619 - KIT)	HOSE, HYD, 787TC40.5 08-08OS-08O9 - **(VALVE PORT "A" TO BULKHEAD)**	1
4	65620 - (65619 - KIT)	HOSE, HYD, 787TC40.5 08-08OS-08O9 - **(VALVE PORT "A" TO BULKHEAD)**	1
	57947	KIT, FITTING TRACK LEVEL-D SERIES	1
5	24187	ELBOW, 90 BULKHEAD - 855BH-TT-08	4
6	65892 - (65891 - KIT)	HOSE ASSY - 787TC30 08-08OS-080S - **(BULKHEAD TO PORT #5 ON ROT MAN)**	1
7	65952 - (65891 - KIT)	HOSE ASSY - 787TC40 08-08OS-080S - **(BULKHEAD TO PORT #6 ON ROT MAN)**	1
8	65894 - (65891 - KIT)	HOSE ASSY - 787TC41.5 08-08OS-080S - **(BULKHEAD TO PORT #4 ON ROT MAN)**	1
9	65895 - (65891 - KIT)	HOSE ASSY - 787TC44 08-08OS-080S - **(BULKHEAD TO PORT #2 ON ROT MAN)**	1
10	16360		4
11	60559	ELBOW, 90 - FF1868T-0808S	1
12	15542	BULHEAD, FRONT - TM	2
13	15528	BOLT - .375" X .75" **LOCTITE™**	2

H100-00970 - CONTROL FALL PROCESSOR PIPING - MAIN BOOM CYLINDER (BULKHEAD FITTING TO CYLINDER)

NOTE: HYDRAULIC FITTINGS GET 545 LOCTITE™

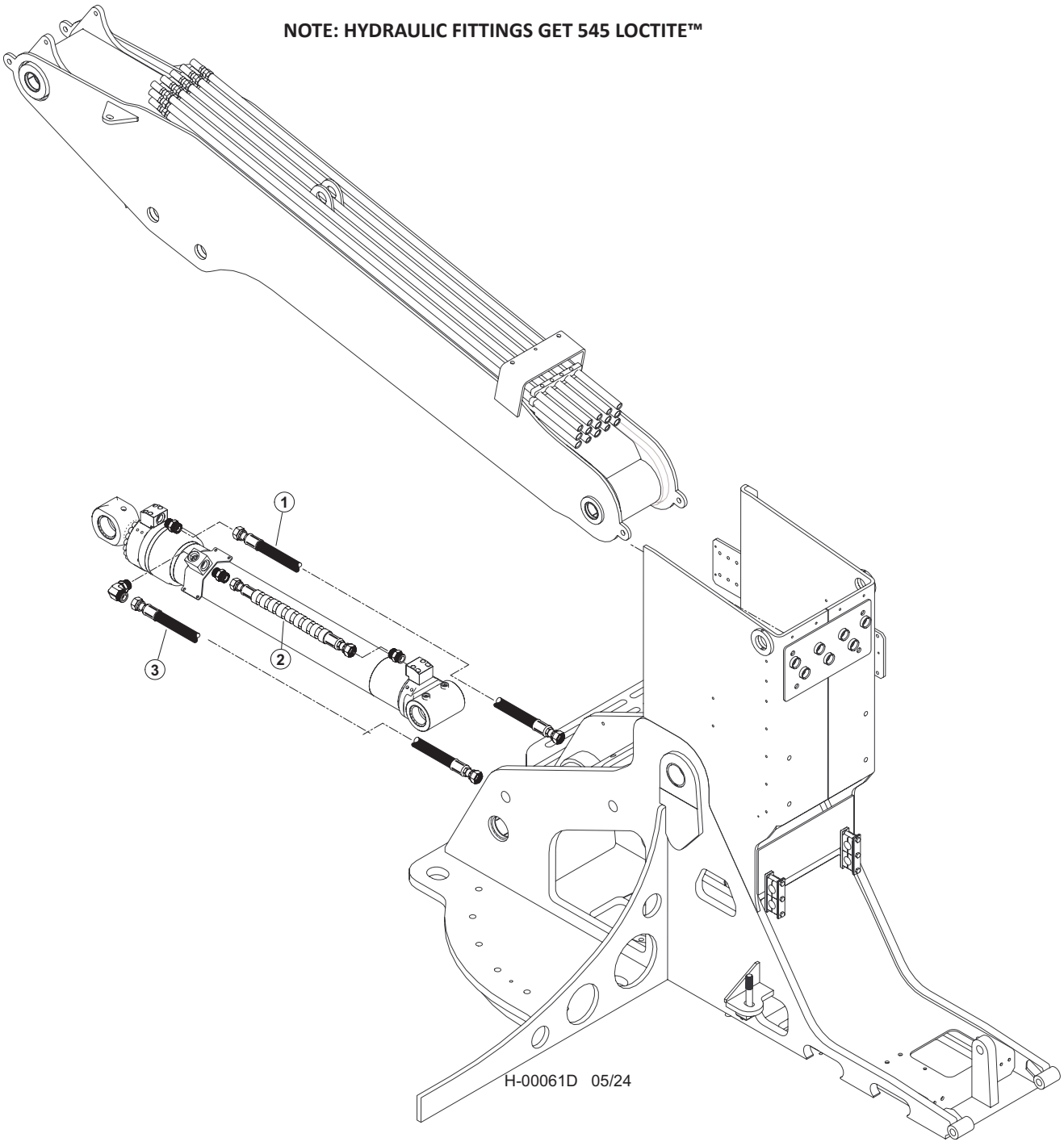

Item	Part #	Description	Qty.
1	65802 - (65799 -KIT)	HOSE, HYD, 787TC70 16-16OS-16OS **- (ROD END OF BOOM CYLINDER)**	1
2	65800 - (65799 - KIT)	HOSE, HYD, 787TC45.5 16-16OS-16OS-SW **- (BASE END OF BOOM CYLINDER TO BLOCK)**	1
3	65801 - (65799 - KIT)	HOSE, HYD, 787TC60 16-16OS-16OS **- (BASE END OF BOOM CYLINDER)**	1

H100-00980 - CONTROL FALL PROCESSOR PIPING - LIGHT WIRE (MAIN BOOM TO STICK BOOM)

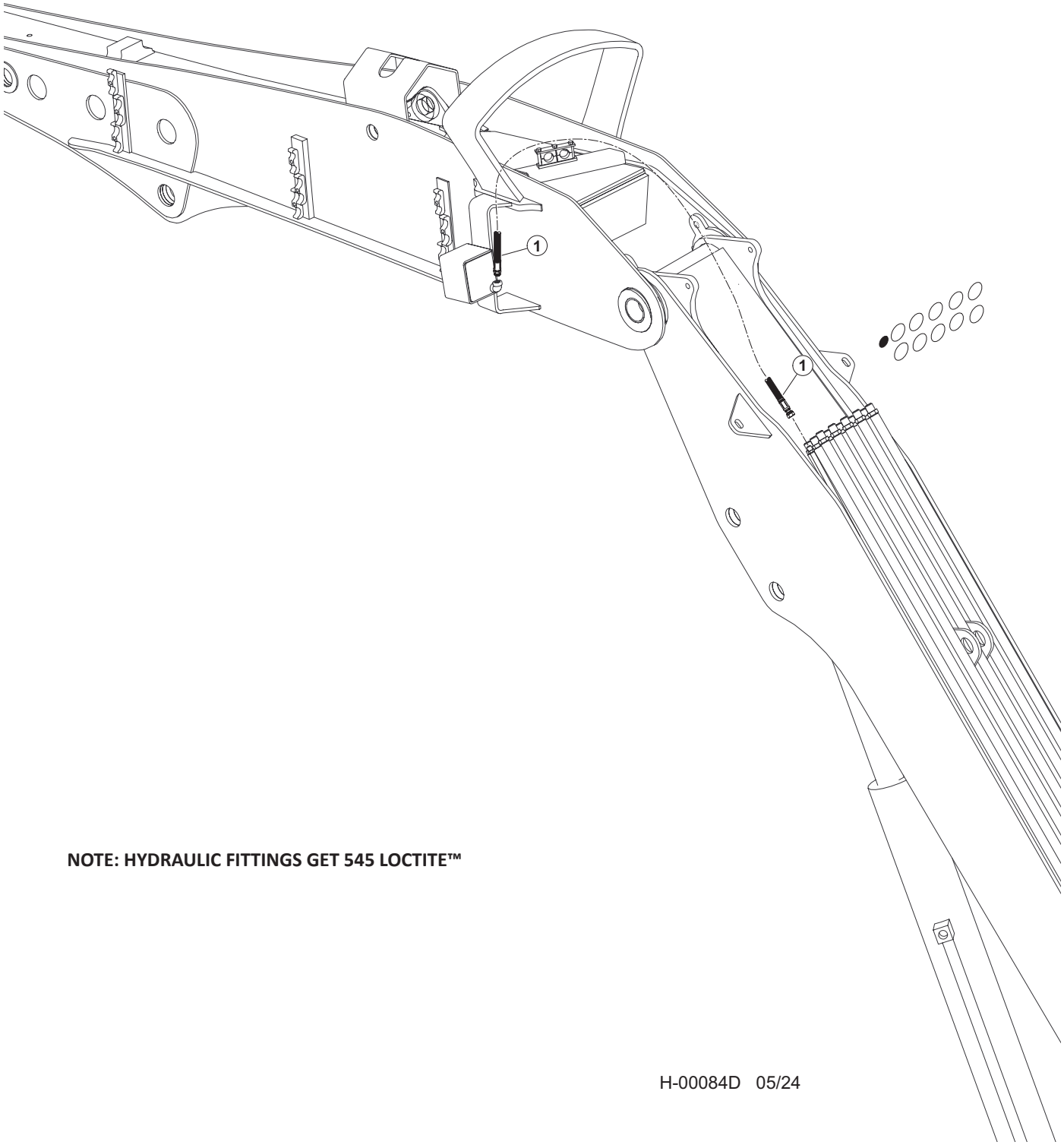

NOTE: HYDRAULIC FITTINGS GET 545 LOCTITE™

H-00084D 05/24

Item	Part #	Description	Qty.
1	65838 - (663770 -KIT)	HOSE ASSY - 387TC76 06-06OS-08PS - **(LIGHT WIRE)**	1

H100-00990 - CONTROL FALL PROCESSOR PIPING - TOOL TILT (MAIN BOOM TO CYLINDER)

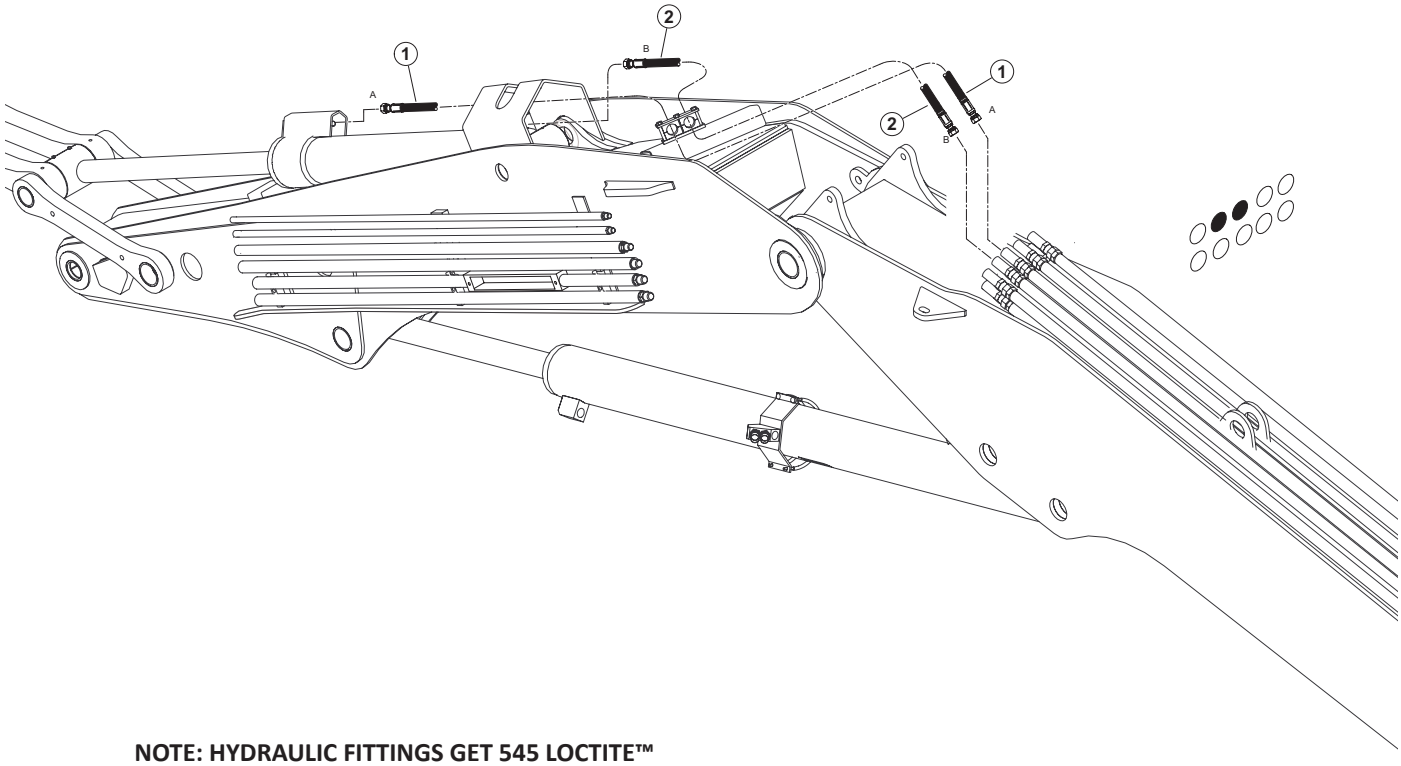

NOTE: HYDRAULIC FITTINGS GET 545 LOCTITE™

H-00085D 05/24

Item	Part #	Description	Qty.
1	65846 - (663770 - KIT)	HOSE, HYD, 787TC160 16-16OS-16OS - **(TOOL CYLINDER "A")**	1
2	65847 - (663770 - KIT)	HOSE, HYD, 787TC108 16-16OS-16OS - **(TOOL CYLINDER "B")**	1

H100-01000 - CONTROL FALL PROCESSOR PIPING - STICK BOOM (MAIN BOOM TO STICK CYLINDER)

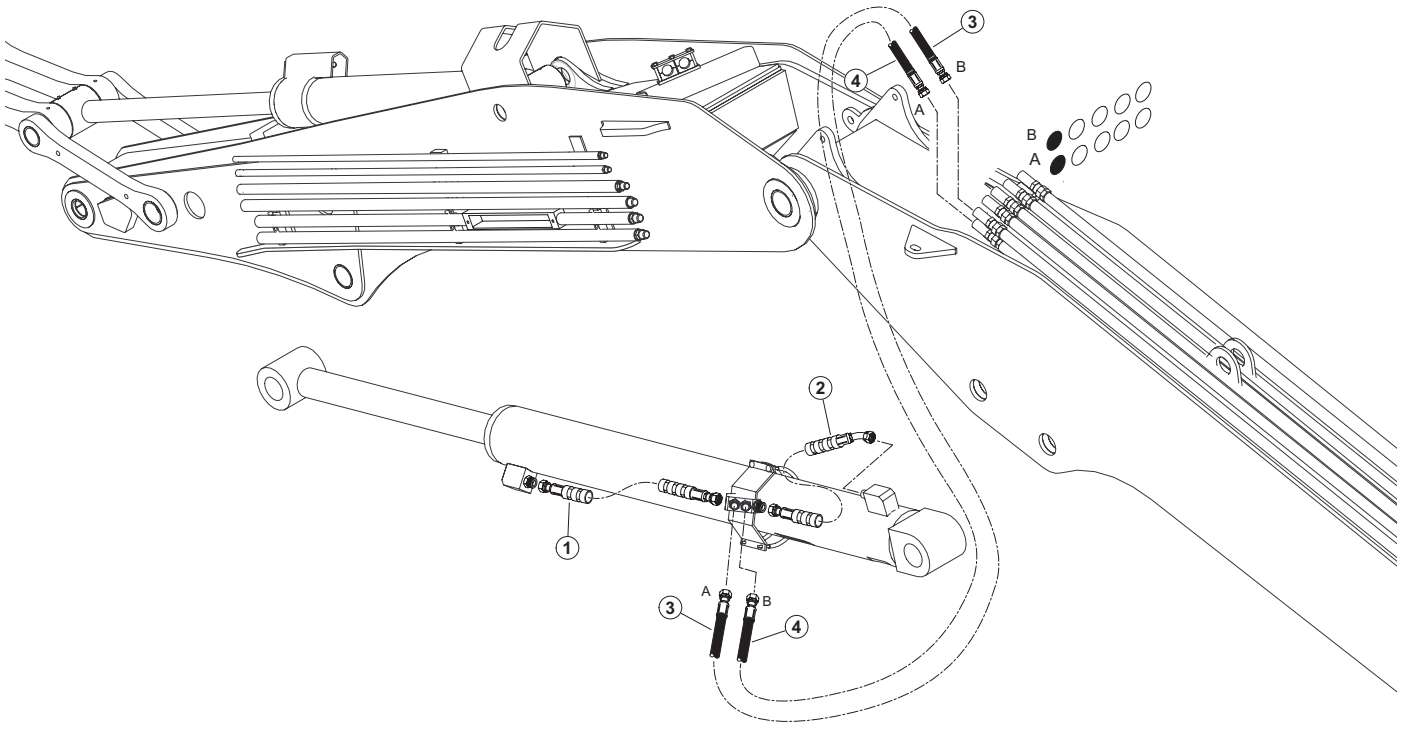

NOTE: HYDRAULIC FITTINGS GET 545 LOCTITE™

H-00086D 05/24

Item	Part #	Description	Qty.
1	65855	HOSE, HYD, 787TC38 16-16OS-16OS-SW **- (STICK CYLINDER ROD - "A")**	1
2	65853	HOSE, HYD, 787TC17 16-16OS-16O4-SW **- (STICK CYLINDER BASE - "B")**	1
3	65848 - (663770 - KIT)	HOSE, HYD, 787TC79 16-16OS-16OS **- (STICK CYLINDER ROD - "A")**	1
4	65849 - (663770 - KIT)	HOSE, HYD, 787TC81 16-16OS-16OS **- (STICK CYLINDER BASE - "B")**	1

H100-01010 - CONTROL FALL PROCESSOR PIPING - ROTATE (MAIN BOOM TO STICK BOOM)

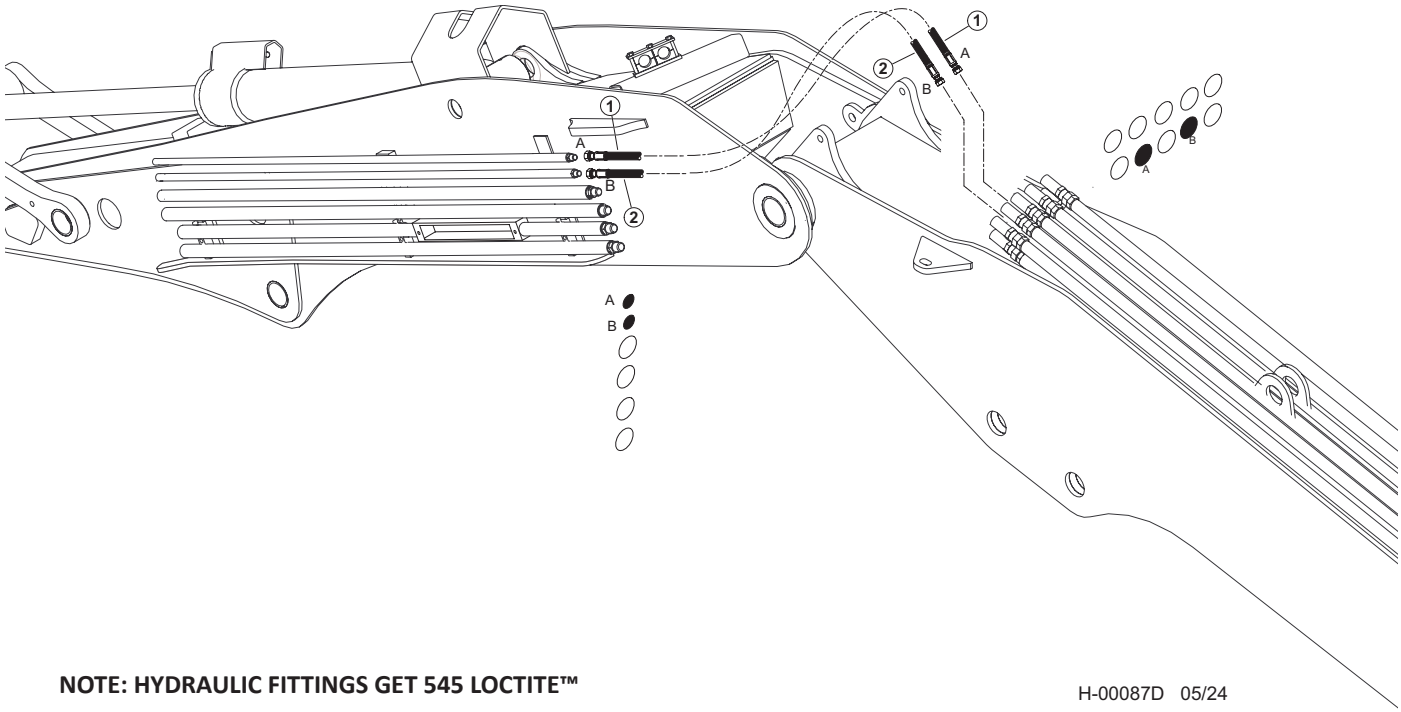

NOTE: HYDRAULIC FITTINGS GET 545 LOCTITE™

H-00087D 05/24

Item	Part #	Description	Qty.
1	65846 - (663770 - KIT)	HOSE, HYD, 787TC160 16-16OS-16OS - **(ROTATE "A")**	1
2	65847 - (663770 - KIT)	HOSE, HYD, 787TC108 16-16OS-16OS - **(ROTATE "B")**	1

H100-01020 - CONTROL FALL PROCESSOR PIPING - PRESSURE & RETURN (MAIN BOOM TO STICK BOOM)

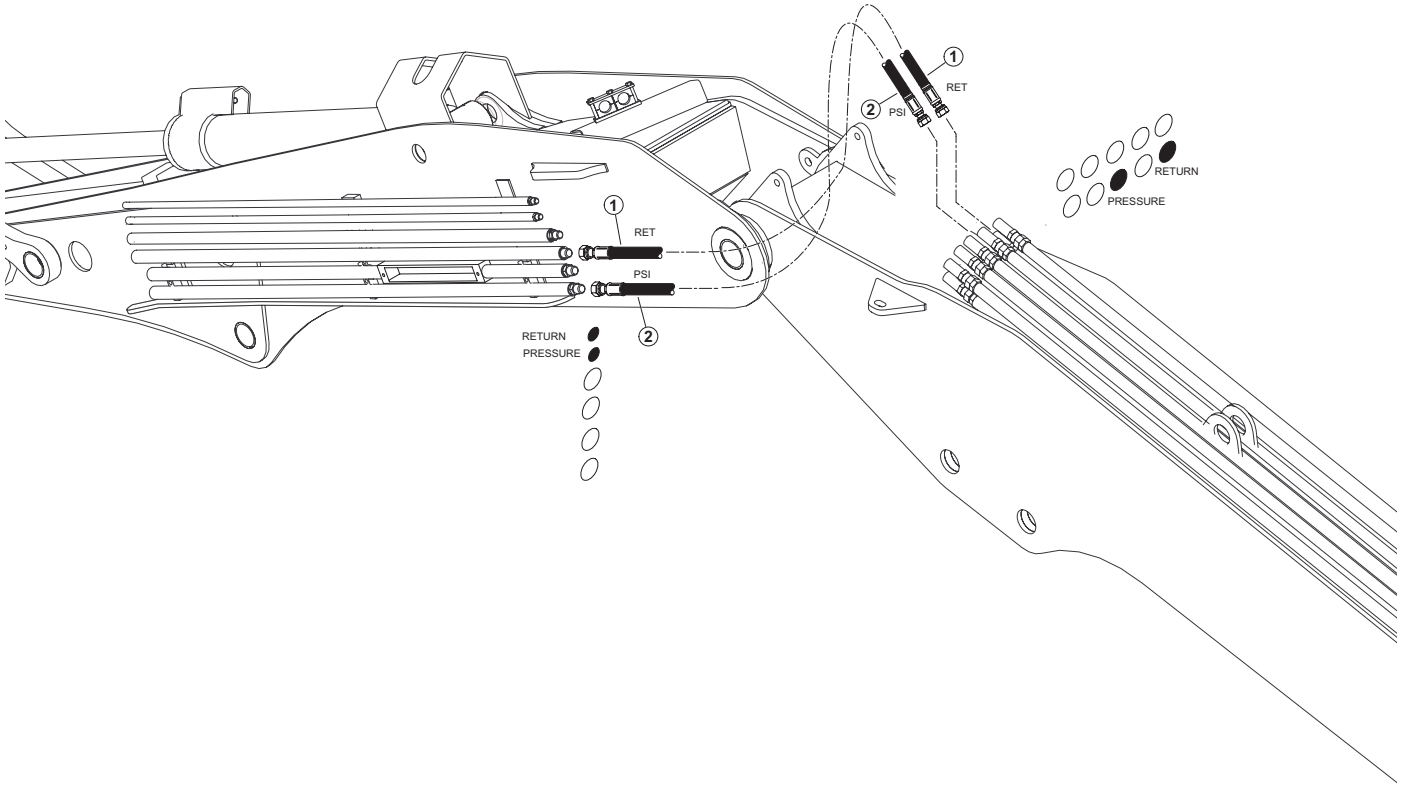

NOTE: HYDRAULIC FITTINGS GET 545 LOCTITE™

H-00088D 05/24

Item	Part #	Description	Qty.
1	66444 - (663770 - KIT)	HOSE, HYD, 722TC75 20-20OS-20OS **- (RETURN**)	1
2	66443 - (663770 - KIT)	HOSE, HYD, 787TC73 20-20OS-20OS **- (PRESSURE)**	1

H100-01030 - CONTROL FALL PROCESSOR PIPING - CASE DRAIN & ATTACHMENT ELEC. (MAIN BOOM TO STICK BOOM)

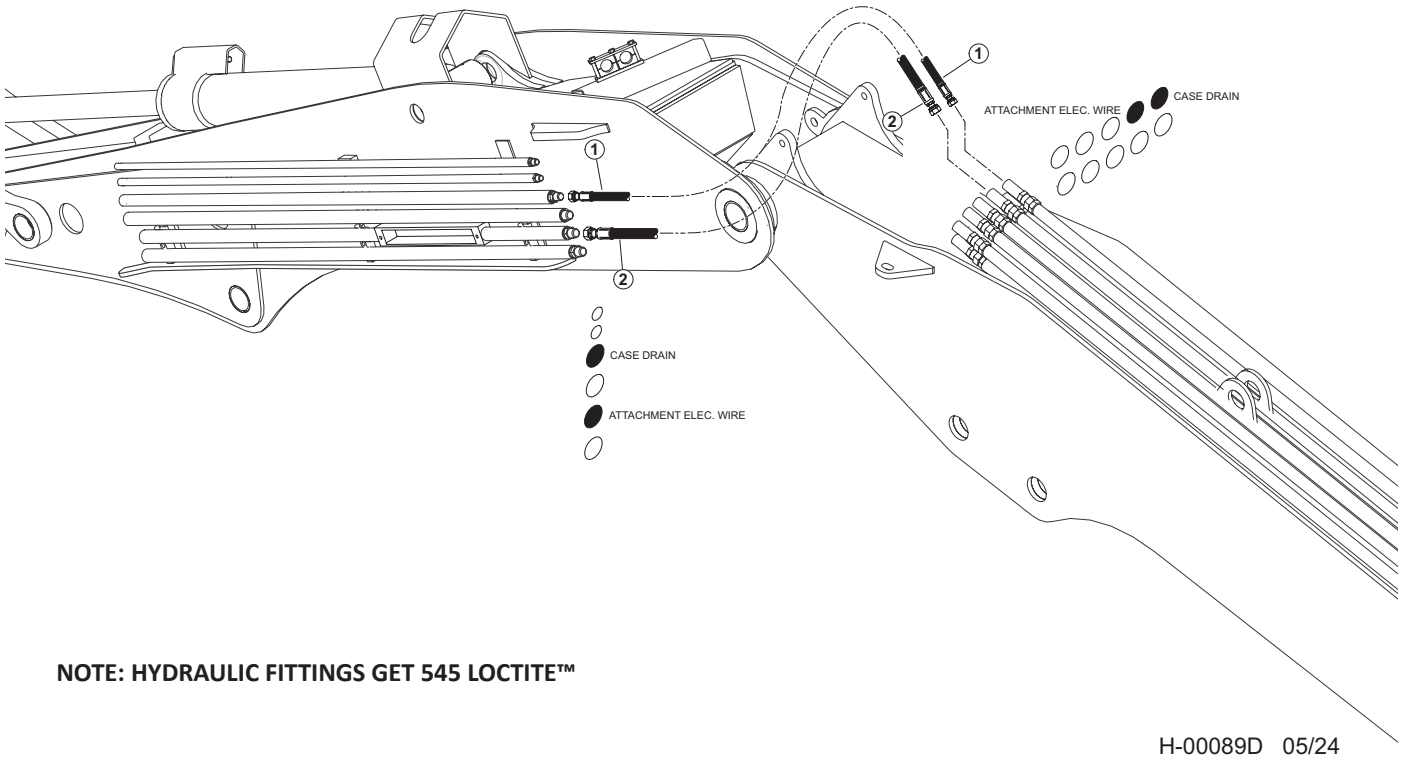

NOTE: HYDRAULIC FITTINGS GET 545 LOCTITE™

H-00089D 05/24

Item	Part #	Description	Qty.
1	65845 - (663770 - KIT)	HOSE, HYD, 722TC76 12-12OS-12OS - **(CASE DRAIN)**	1
2	66440 - (663770 - KIT)	HOSE, HYD, 387TC74 16-16OS-16OS - **(ATTACHMENT WIRE)**	1

H100-01040 - CONTROL FALL PROCESSOR PIPING - GREASE HOSES (MAIN BOOM TO STICK BOOM)

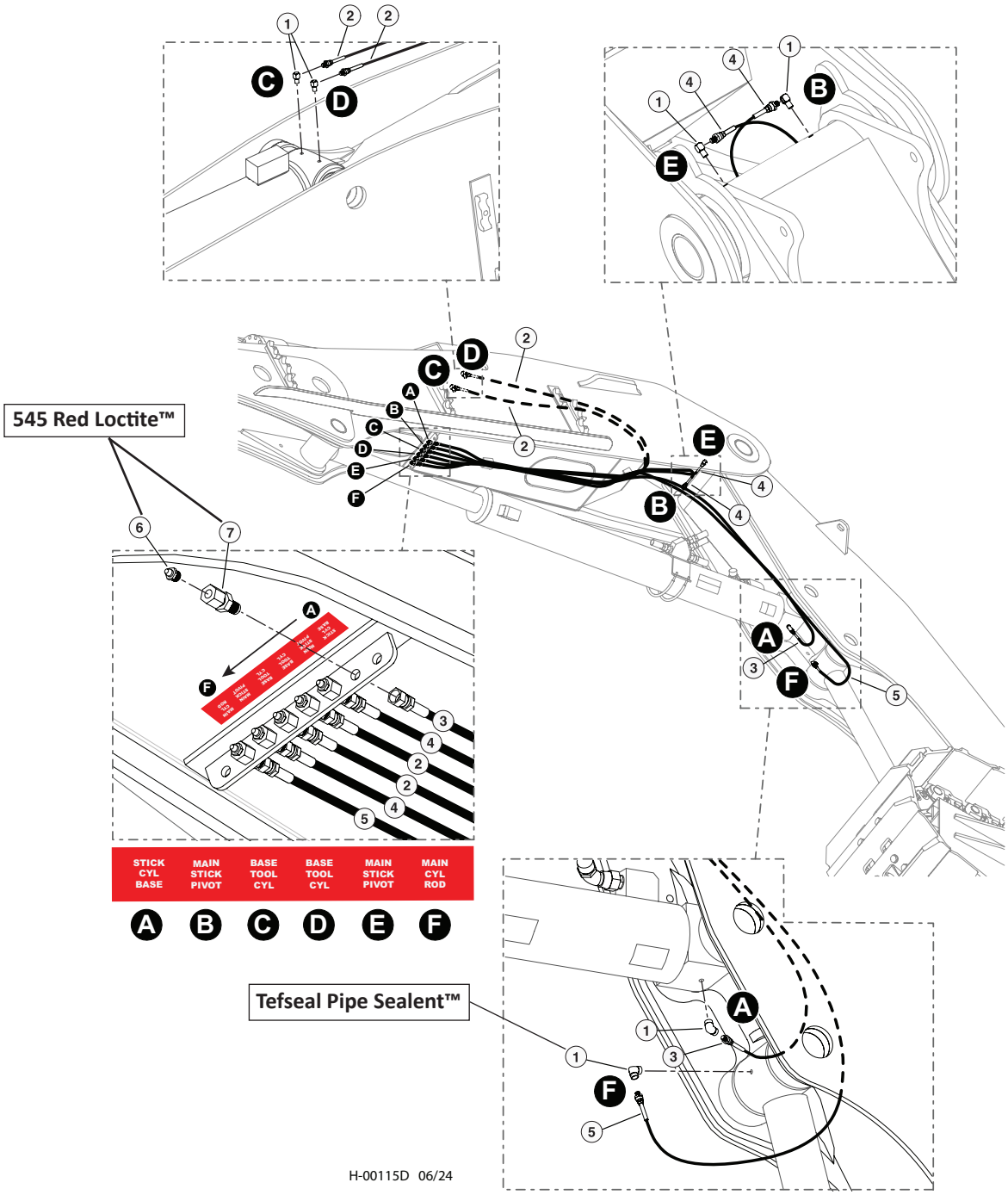

Item	Part #	Description	Qty.
1	22281	FITTING, 90° - 5546132 **TEFSEAL PIPE SEALENT™**	4
2	55605 - (KIT)	HOSE ASSY - 2133-02-02PS-04JS (TOOL CYL BASE)	2
3	55605 - (KIT)	HOSE ASSY - 2138-02-02PS-04JS (STICK CYL BASE)	1
4	55605 - (KIT)	HOSE ASSY - 2188-02-02PS-04JS (MAIN/STICK PIVOT)	2
5	55605 - (KIT)	HOSE ASSY - 2147-02-02PS-04JS (MAIN CYL ROD)	1
6	15658	CONNECTOR, STRAIGHT BULKHEAD - 2239-2-4S **545 RED LOCTITE™**	6
7	10704	FITTING, STRAIGHT GREASE - 1/8” PIPE THREAD **545 RED LOCTITE™**	6

H100-01050 - MAIN BOOM PIPING - FIXED STICK BOOM DANGLE HEAD PROCESSOR

NOTE: HYDRAULIC FITTINGS GET 545 LOCTITE™

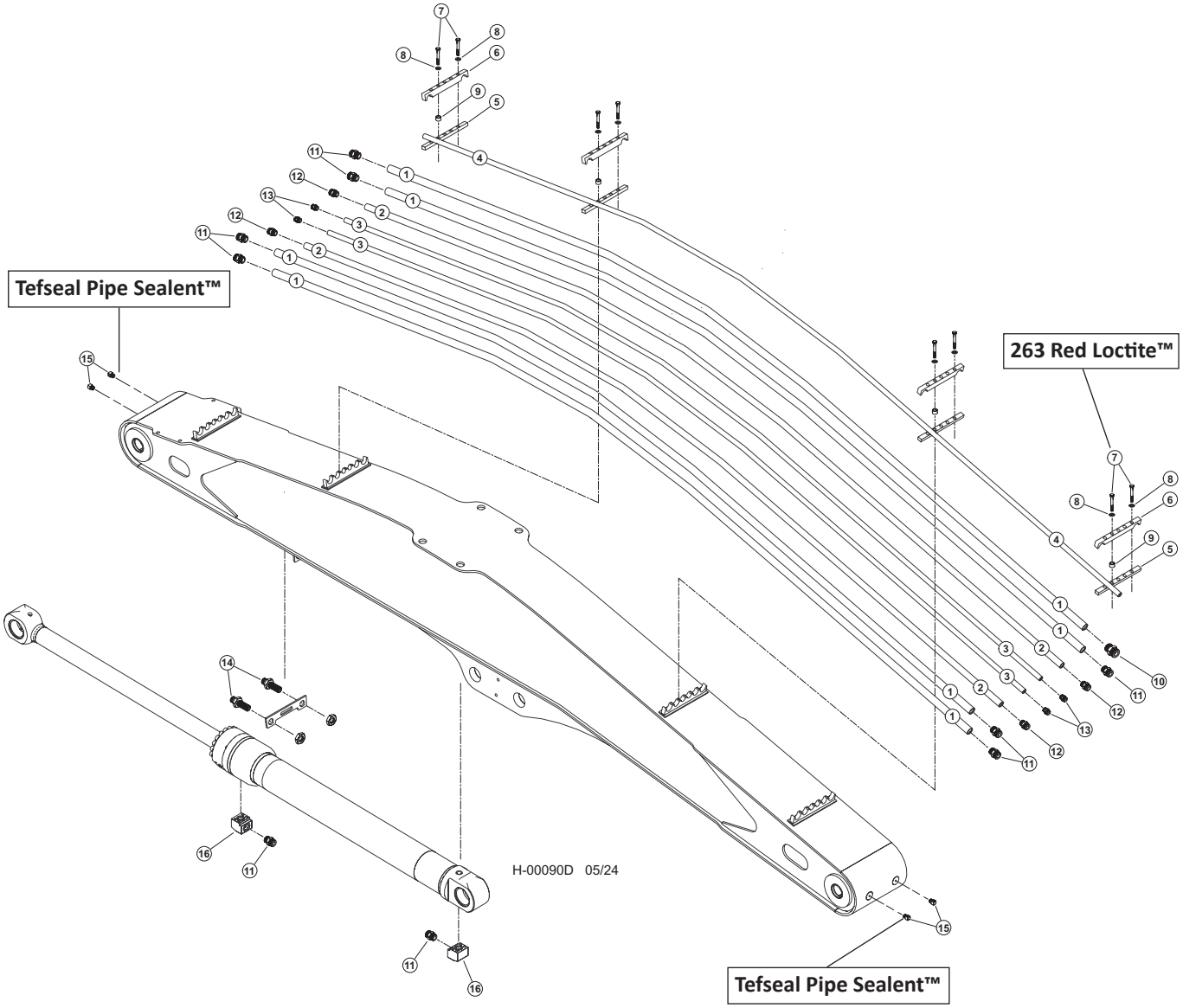

H100-01050 - MAIN BOOM PIPING - FIXED STICK BOOM DANGLE HEAD PROCESSOR

Item	Part #	Description	Qty.
1	60261	TUBELINE - 1” HARVESTER BOOM	4
2	60262	TUBELINE - .75” HARVESTER BOOM	2
3	60263	TUBELINE - .5” HARVESTER BOOM	2
4	60736	TUBE, BOOM LIGHT - HARVESTER	1
5	60254	PLATE, TUBELINE BASE	4
6	60252	CLAMP, TUBE BASE - DRILLED	4
7	10723	BOLT - .625” X 4.5” **263 RED LOCTITE™**	16
8	23210	WASHER, SAE FLAT - .625” (EXTRA THICK)	16
9	19219	SPACER	12
	58973 (FITTING KIT)	HARVESTER BOOM ADAPTER KIT	
10	17063	CONNECTOR, STR - FF1852T-2016S	1
11	15225	CONNECTOR, STR - FF1852T-1616S	9
12	15152	CONNECTOR, STR - FF1852T-1212S	4
13	15117	CONNECTOR, STR - FF1852T-0808S	4
14	20033	CONNECTOR, STR BULKHEAD - 832-TT-16	2
15	22281	ELBOW, 1/8-27 NPTF(M), 1/8-17 NPTF(F),90 **TEFSEAL PIPE SEALENT™**	4
16	57601	FLANGE, BLOCK ELBOW W184-16-16U CODE 62	2
	NOT SHOWN		
	53218	WIRE - PROCESSING HEAD CABLE (7 WIRES)	40’
	58380	CABLE	40’

H100-01060 - STICK BOOM PIPING - FIXED STICK BOOM DANGLE HEAD PROCESSOR

NOTE: HYDRAULIC FITTINGS GET 545 LOCTITE™

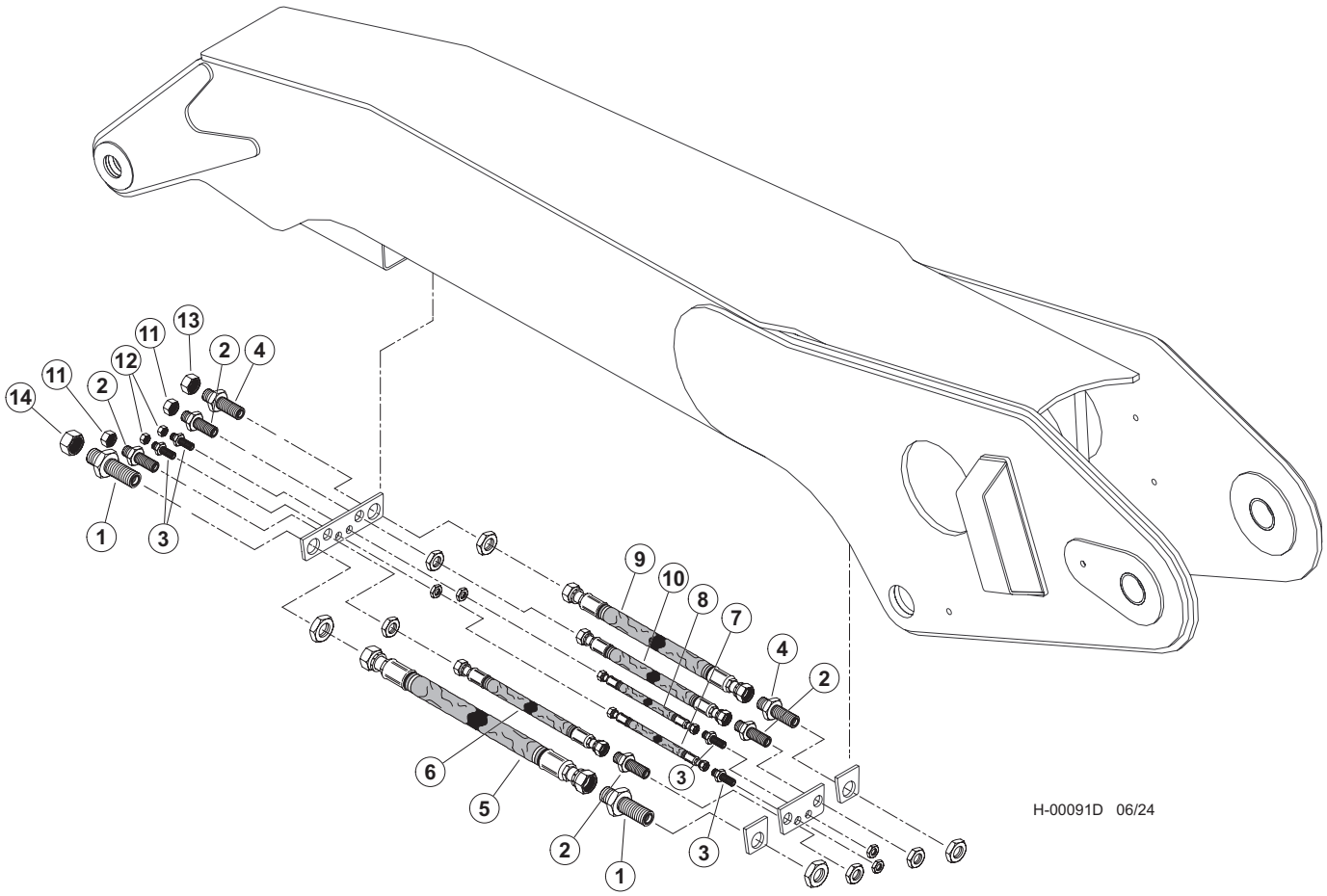

H100-01060 - STICK BOOM PIPING - FIXED STICK BOOM DANGLE HEAD PROCESSOR

Item	Part #	Description	Qty.
1	54743	CONNECTOR, STR BULKHEAD - 20 WLO-WLNL-S	2
2	19754	CONNECTOR, STR BULKHEAD - 12 WLO-WLNL-S	4
3	20196	CONNECTOR, STR BULKHEAD - FF1994T-0808S	4
4	20033	CONNECTOR, STR BULKHEAD - 832-TT-16	2
5	664900 - (664880 - KIT)	HOSE, HYD, 187TC51 20-20OS-20OS-SW - **(RETURN)**	1
6	664940 - (664880 - KIT)	HOSE, HYD, 387TC51 16-16OS-16OS-SW - **(PROCESSOR WIRE)**	1
7	664970 - (664880 - KIT)	HOSE, HYD, 722TC51 08-08OS-08OS-W - **(ROTATE “A”)**	1
8	664970 - (664880 - KIT)	HOSE, HYD, 722TC51 08-08OS-08OS-W - **(ROTATE “B”)**	1
9	664990 - (664880 - KIT)	HOSE, HYD, 787TC51 16-16OS-16OS-W - **(PRESSURE)**	1
10	664930 - (664880 - KIT)	HOSE, HYD, 387TC51 12-12OS-12OS-SW - **(CASE DRAIN)**	1
11	15437	CAP - FF9863-12S	2
12	15434	CAP - FF9863-08S	2
13	15436	CAP - FF9863-16S	1
14	17075	CAP - FF9863-20S	1

H100-01070 - FIXED STICK BOOM DANGLE PROCESSOR PIPING - PRESSURE, CASE DRAIN & LOAD SENSE (K220/L90 VALVE) - AUXILIARY PUMP TO BOOM)

NOTE: HYDRAULIC FITTINGS GET 545 LOCTITE™

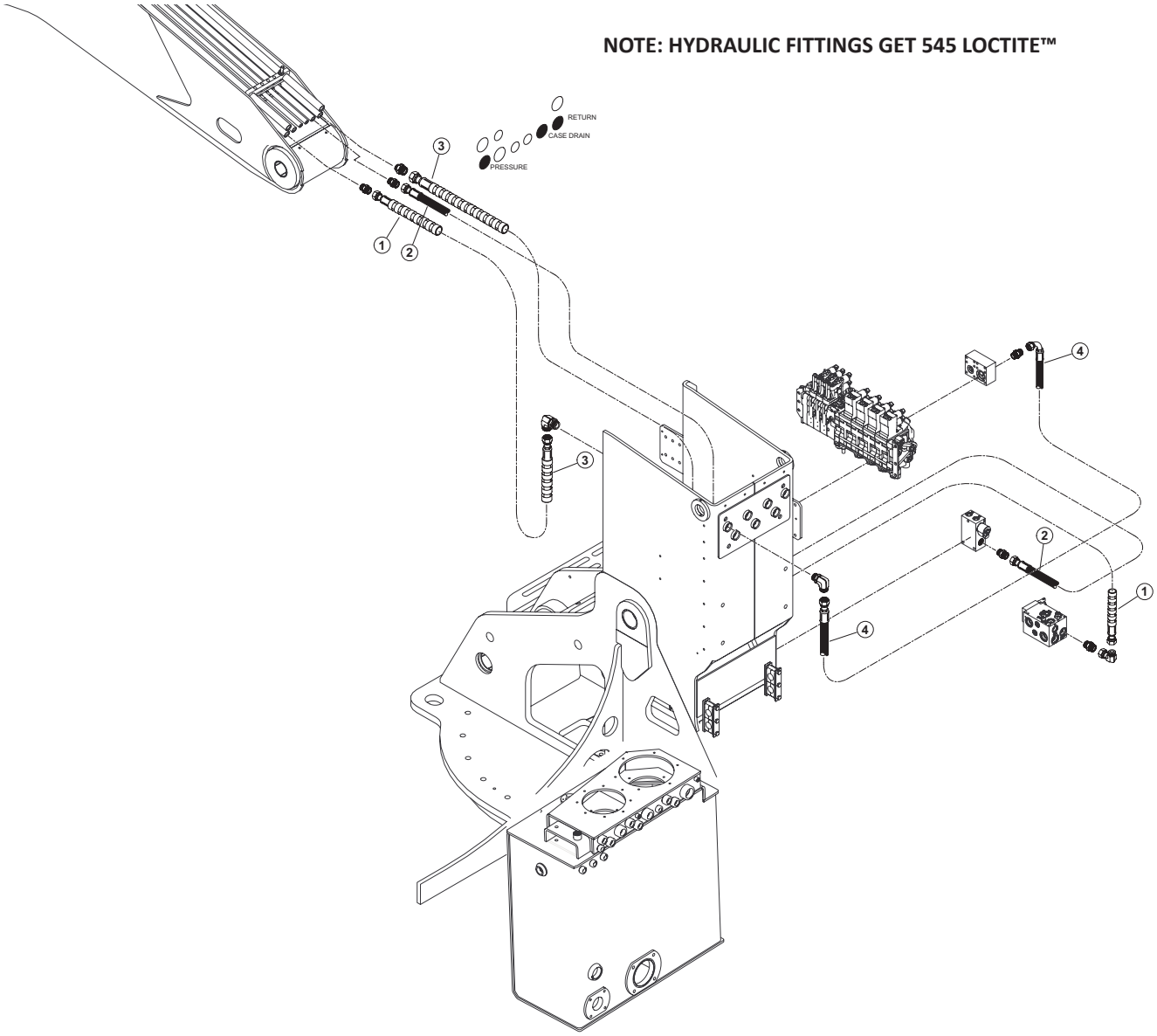

H-00092D 06/24

Item	Part #	Description	Qty.
1	(SEE DESCRIPTION)	HOSE ASSY - 187TC58 20-20JS-20OS-SW - (ATTACHMENT RETURN)	1
2	(SEE DESCRIPTION)	HOSE ASSY - 187TC56 12-12OS-12OS-W - (ATTACHMENT CASE DRAIN)	1
3	(SEE DESCRIPTION)	HOSE ASSY - 787TC42 16-16OS-16OS-SW - (ATTACHMENT PRESSURE)	1
4	(SEE DESCRIPTION)	HOSE ASSY - 787TC32 16-16OS-16O9 - (ATTACHMENT PRESSURE)	1
5	(SEE DESCRIPTION)	HOSE ASSY - 787TC39 04-04OS-04OS-W - (AUXILARY PUMP LS DRAIN)	1
6	(SEE DESCRIPTION)	HOSE ASSY - 787TC32 16-16OS-16O9 - (ATTACHMENT PRESSURE)	1
7	(SEE DESCRIPTION)	HOSE ASSY - 787TC35 04-04OS-04O9-W - (AUXILARY PUMP LS DRAIN)	1
8	(SEE DESCRIPTION)	HOSE ASSY - 187TC27.5 12-12OS-12O9 - (AUXILARY PUMP CASE DRAIN)	1
9	(SEE DESCRIPTION)	HOSE ASSY - 787TC11 04-04OS-04O9 - (AUXILARY PUMP LOAD SENSE)	1
10	(SEE DESCRIPTION)	HOSE ASSY - 7219-200018.5 32-00-00 - (AUXILARY PUMP SUCTION INLET)	1

H200-00410 - STICK BOOM DANGLE PROCESSOR PIPING - SAW PRESSURE, RETURN, CASE DRAIN & LOAD SENSE (W450/W300 VALVE) - VALVE TO BOOM

NOTE: HYDRAULIC FITTINGS GET 545 LOCTITE™

NOTE: APPLY GREASE TO O-RINGS

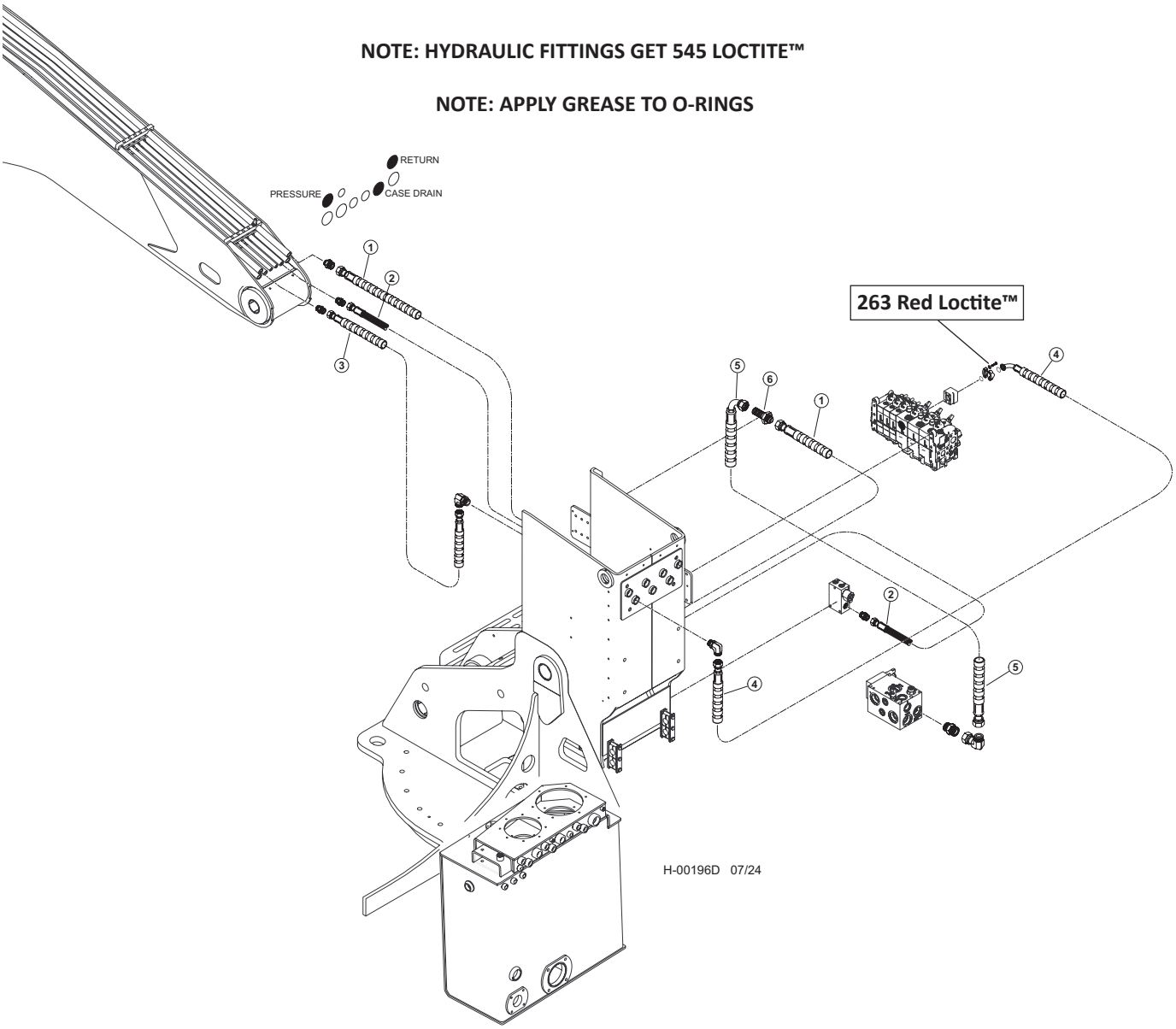

Item	Part #	Description	Qty.
1	66477 - (65864 - KIT)	HOSE, HYD, 187TC53 20-20JS-20OS-SW - **(ATTACHMENT RETURN)**	1
2	66476 - (65864 - KIT)	HOSE, HYD, 187TC51 12-12OS-12OS-SW - **(ATTACHMENT CASE DRAIN)**	1
3	65884 - (65864 - KIT)	HOSE, HYD, 787TC39 16-16OS-16OS-SW - **(VALVE PRESSURE)**	1
4	65640 - (65864 - KIT)	HOSE, HYD, 787TC46 16-16OS-20PH4-SW - **(VALVE PRESSURE)**	1
5	65677 - (65864 - KIT)	HOSE, HYD, 187TC42 20-20JS-20J9-SW - **(RETURN)**	1
6	57491 - (57950- KIT)	FITTING, 20 WTX-WLN-S	1

H100-01080 - FIXED STICK BOOM DANGLE PROCESSOR PIPING - STICK BOOM CYLINDER (K220/L90 VALVE) - MAIN VALVE TO BOOM

NOTE: HYDRAULIC FITTINGS GET 545 LOCTITE™

NOTE: APPLY GREASE TO O-RINGS

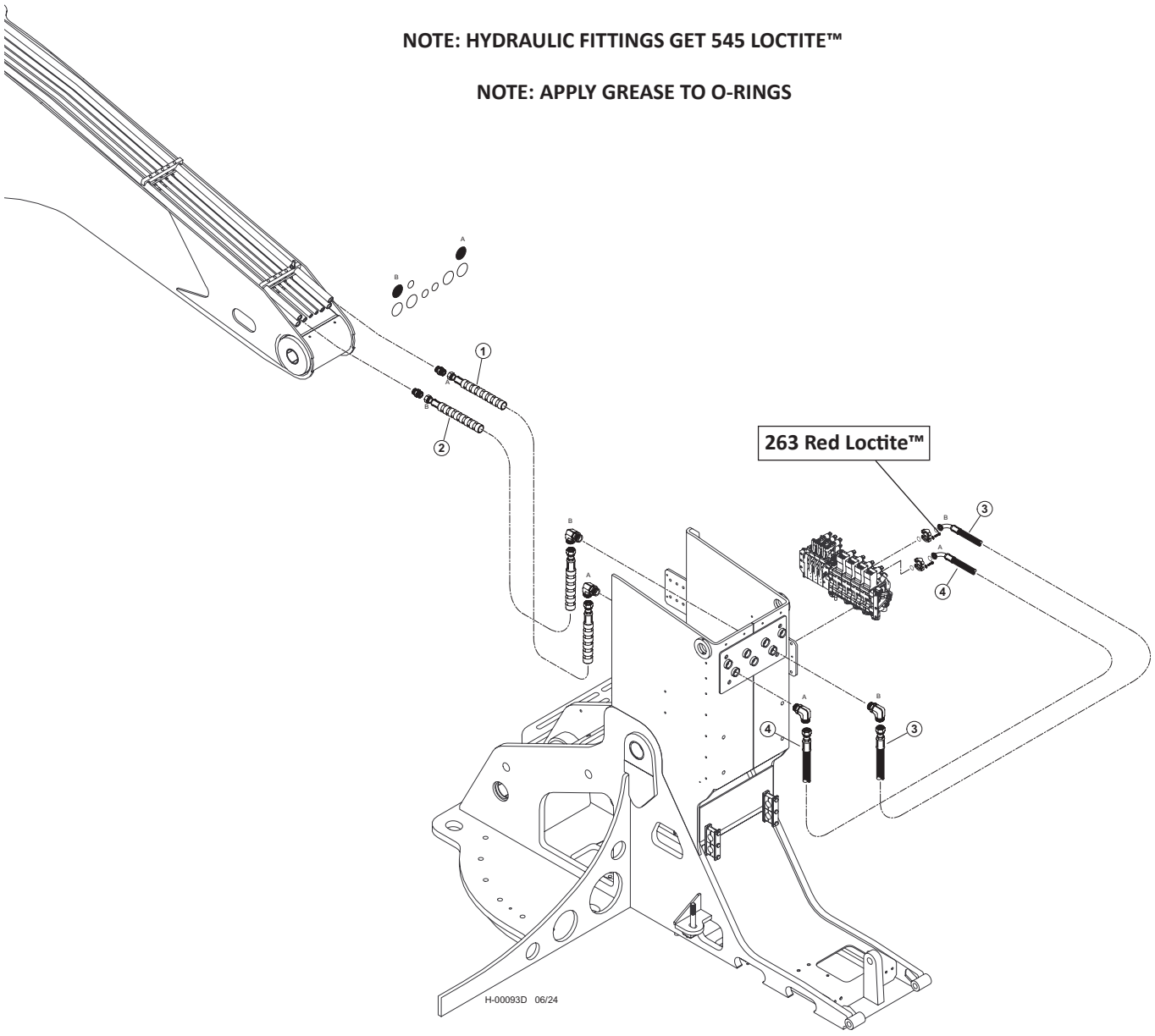

Item	Part #	Description	Qty.
1	(SEE DESCRIPTION)	HOSE ASSY - 722TC39 16-16OS-16OS-SW - (STICK CYLINDER “A”)	1
2	(SEE DESCRIPTION)	HOSE ASSY - 722TC39 16-16OS-16OS-SW - (STICK CYLINDER “B”)	1
3	(SEE DESCRIPTION)	HOSE ASSY - 722TC40 16-16OS-16PA9 - (STICK CYLINDER “B”)	1
4	(SEE DESCRIPTION)	HOSE ASSY - 722TC39 16-16OS-16PA9 - (STICK CYLINDER “A”)	1

H200-00420 - FIXED STICK BOOM DANGLE PROCESSOR PIPING - STICK BOOM CYLINDER (W450/W300 VALVE) - MAIN VALVE TO BOOM

NOTE: HYDRAULIC FITTINGS GET 545 LOCTITE™

NOTE: APPLY GREASE TO O-RINGS

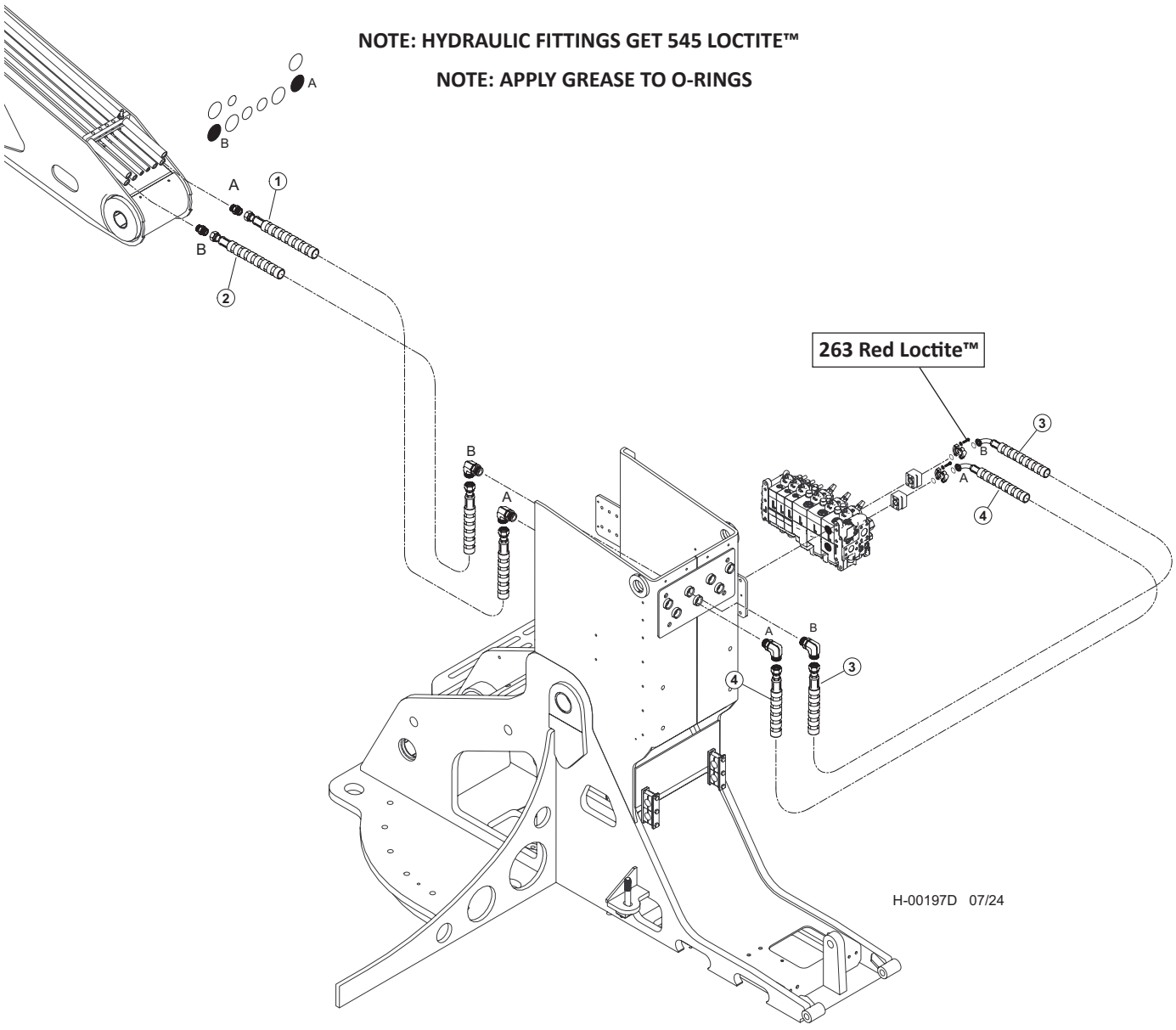

Item	Part #	Description	Qty.
1	65884 - (65864 - KIT)	HOSE, HYD, 787TC39 16-16OS-16OS-SW **("A" PORT - CHIMNEY TO BOOM)**	1
2	65885 - (65864 - KIT)	HOSE, HYD, 787TC40 16-16OS-16OS-SW **("B" PORT - CHIMNEY TO BOOM)**	1
3	66478 - (65897 - KIT)	HOSE, HYD, 787TC38 16-16OS-20PH9-SW **("B" PORT - VALVE TO CHIMNEY)**	1
4	65460 - (65897 - KIT)	HOSE, HYD, 787TC36 16-16OS-20PH9-SW **("A" PORT - VALVE TO CHIMNEY)**	1

H100-01090 - FIXED STICK BOOM DANGLE PROCESSOR PIPING - ROTATE (K220/L90 VALVE) - MAIN VALVE TO BOOM

NOTE: HYDRAULIC FITTINGS GET 545 LOCTITE™

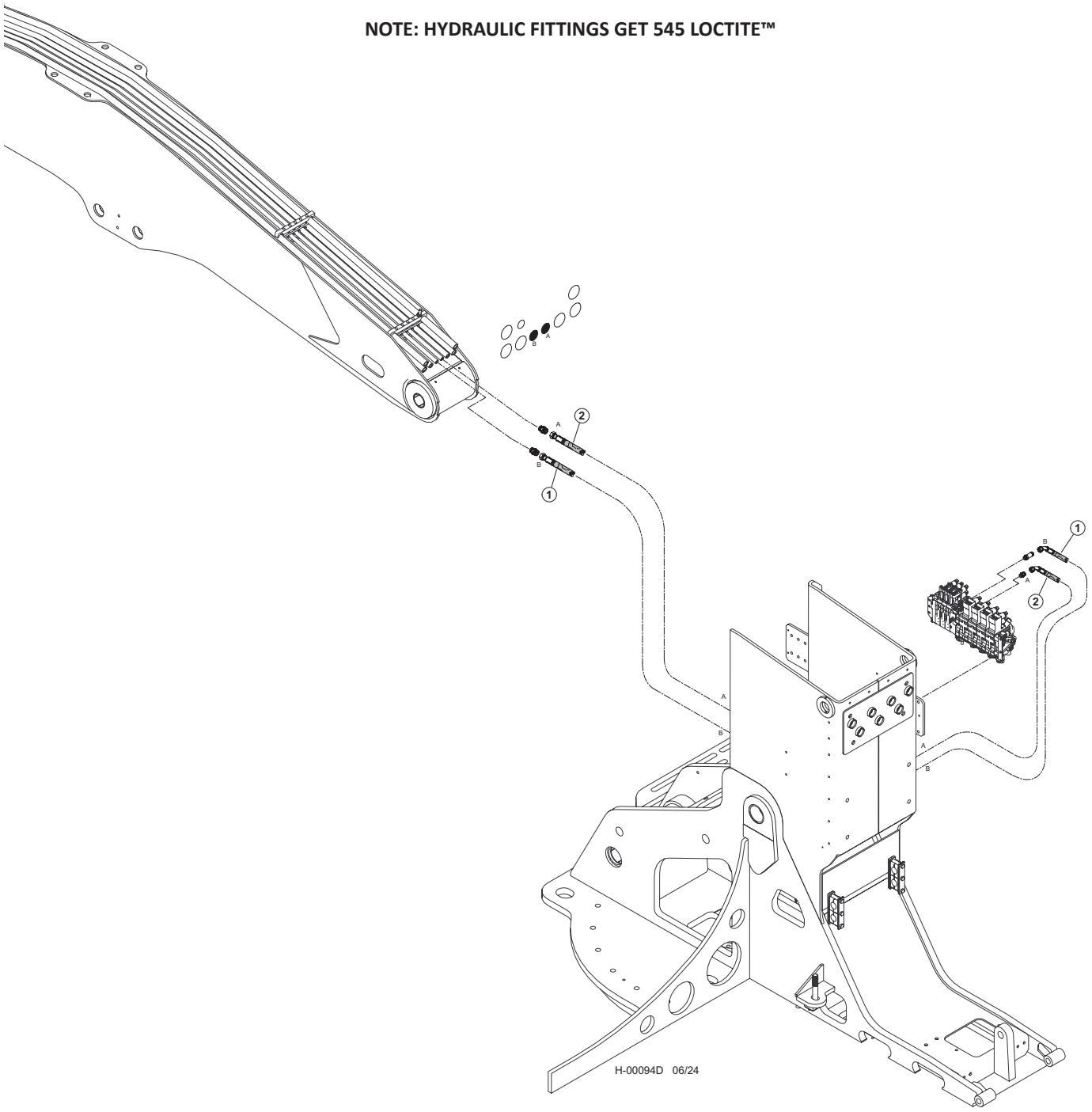

Item	Part #	Description	Qty.
1	58188 - (KIT)	HOSE ASSY - 722TC61 10-10OS-10O4-W - (ROTATE “B”)	1
2	58188 - (KIT)	HOSE ASSY - 722TC60 10-10OS-10O4-W - (ROTATE “A”)	1

H200-00430 - FIXED STICK BOOM DANGLE PROCESSOR PIPING - ROTATE (W450/W300 VALVE) MAIN VALVE TO BOOM

NOTE: HYDRAULIC FITTINGS GET 545 LOCTITE™

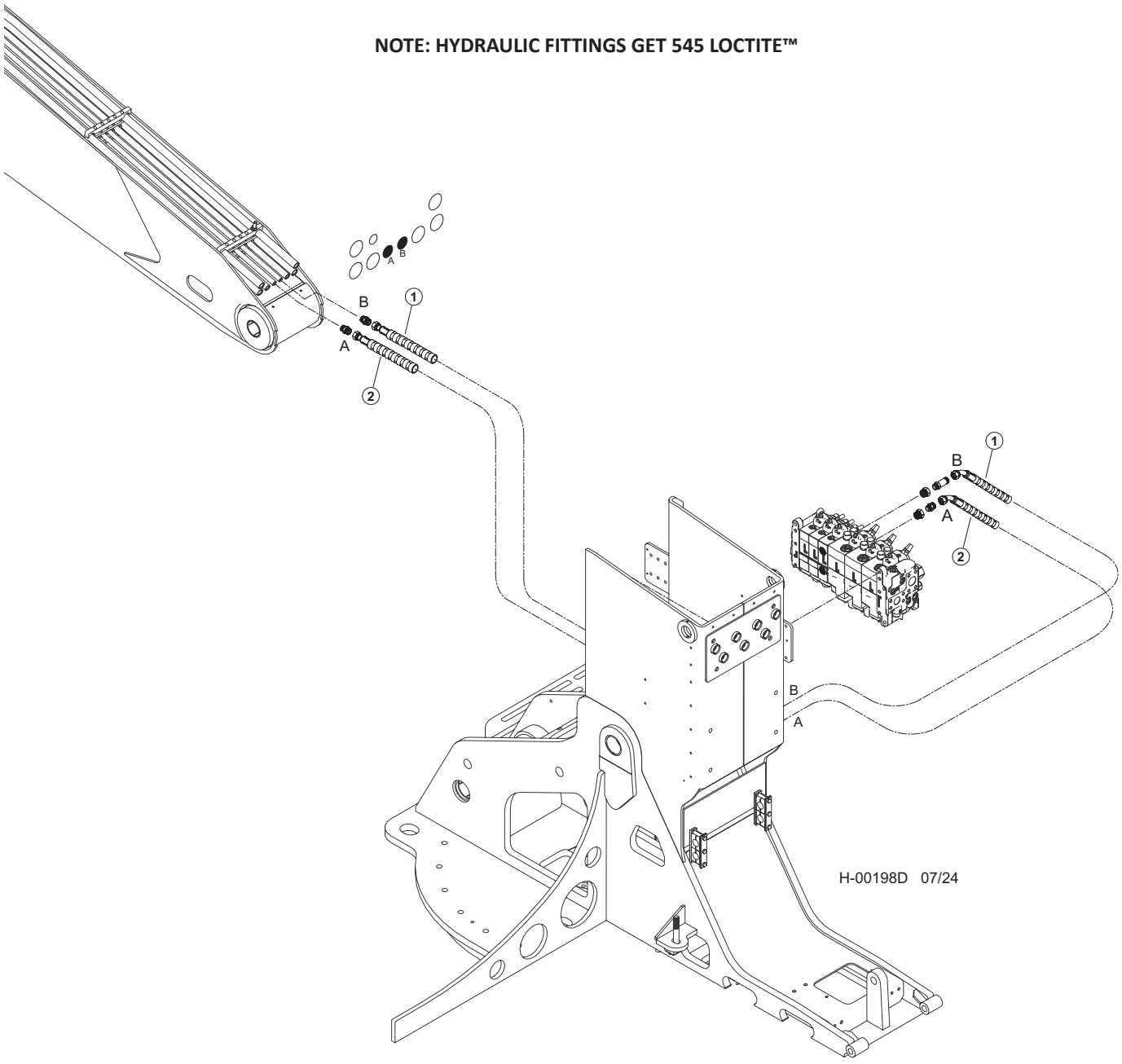

Item	Part #	Description	Qty.
1	65863 - (65897 - KIT)	HOSE, HYD, 722TC65.5 10-10OS-10O4-W - **(LATERAL TILT "B")**	1
2	65863 - (65897 - KIT)	HOSE, HYD, 722TC65.5 10-10OS-10O4-W - **(LATERAL TILT "A")**	1

H100-01100 - FIXED STICK BOOM DANGLE PROCESSOR PIPING - CAB LEVEL (K220/L90 VALVE) MAIN VALVE TO BOOM

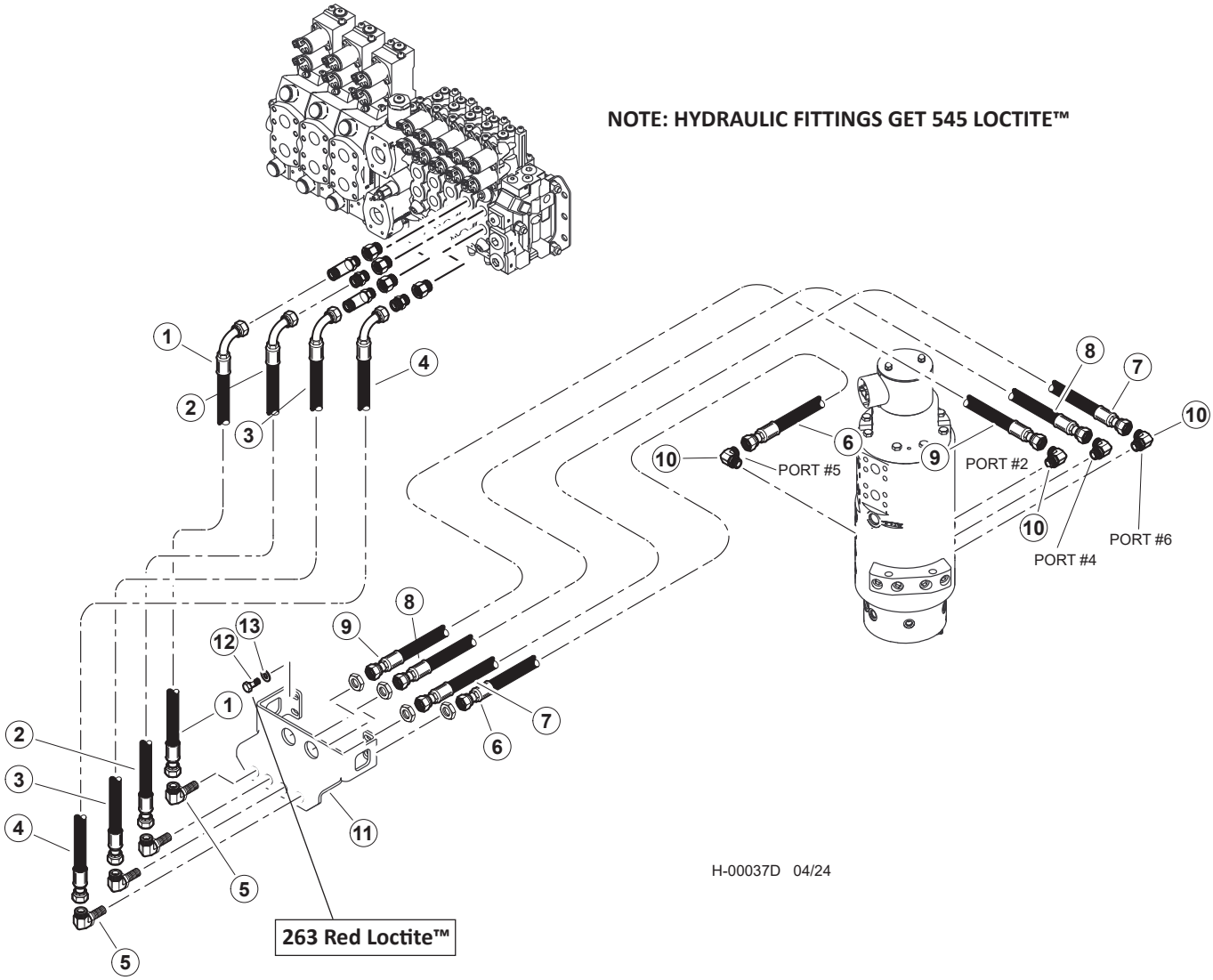

Item	Part #	Description	Qty.
1	57945 - (KIT)	HOSE ASSY - 787TC42 08-08OS-0809 - (VALVE PORT “B” TO BULKHEAD)	1
2	57945 - (KIT)	HOSE ASSY - 787TC42 08-08OS-0809 - (VALVE PORT “B” TO BULKHEAD)	1
3	57945 - (KIT)	HOSE ASSY - 787TC39 08-08OS-0809 - (VALVE PORT “A” TO BULKHEAD)	1
4	57945 - (KIT)	HOSE ASSY - 787TC39 08-08OS-0809 - (VALVE PORT “A” TO BULKHEAD)	1
	57947	KIT, FITTING TRACK LEVEL-D SERIES	1
5	24187	ELBOW, 90 BULKHEAD - 855BH-TT-08	4
6	57945 - (KIT)	HOSE ASSY - 787TC30 08-08OS-080S - (BULKHEAD TO PORT #5 ON ROT MAN)	1
7	57945 - (KIT)	HOSE ASSY - 787TC40 08-08OS-080S - (BULKHEAD TO PORT #6 ON ROT MAN)	1
8	57945 - (KIT)	HOSE ASSY - 787TC41.5 08-08OS-080S - (BULKHEAD TO PORT #4 ON ROT MAN)	1
9	57945 - (KIT)	HOSE ASSY - 787TC44 08-08OS-080S - (BULKHEAD TO PORT #2 ON ROT MAN)	1
10	16360	ELBOW, 90 - FF1868T-0808S	4
11	60559	BULHEAD, FRONT - TM	1
12	15542	BOLT - .375” X .75” **263 RED LOCTITE™**	2
13	15528	WASHER, SAE FLAT - .375” OR 3/8”	

H200-00440 - FIXED STICK BOOM DANGLE PROCESSOR PIPING - CAB LEVEL (W450/W300 VALVE) MAIN VALVE TO BOOM

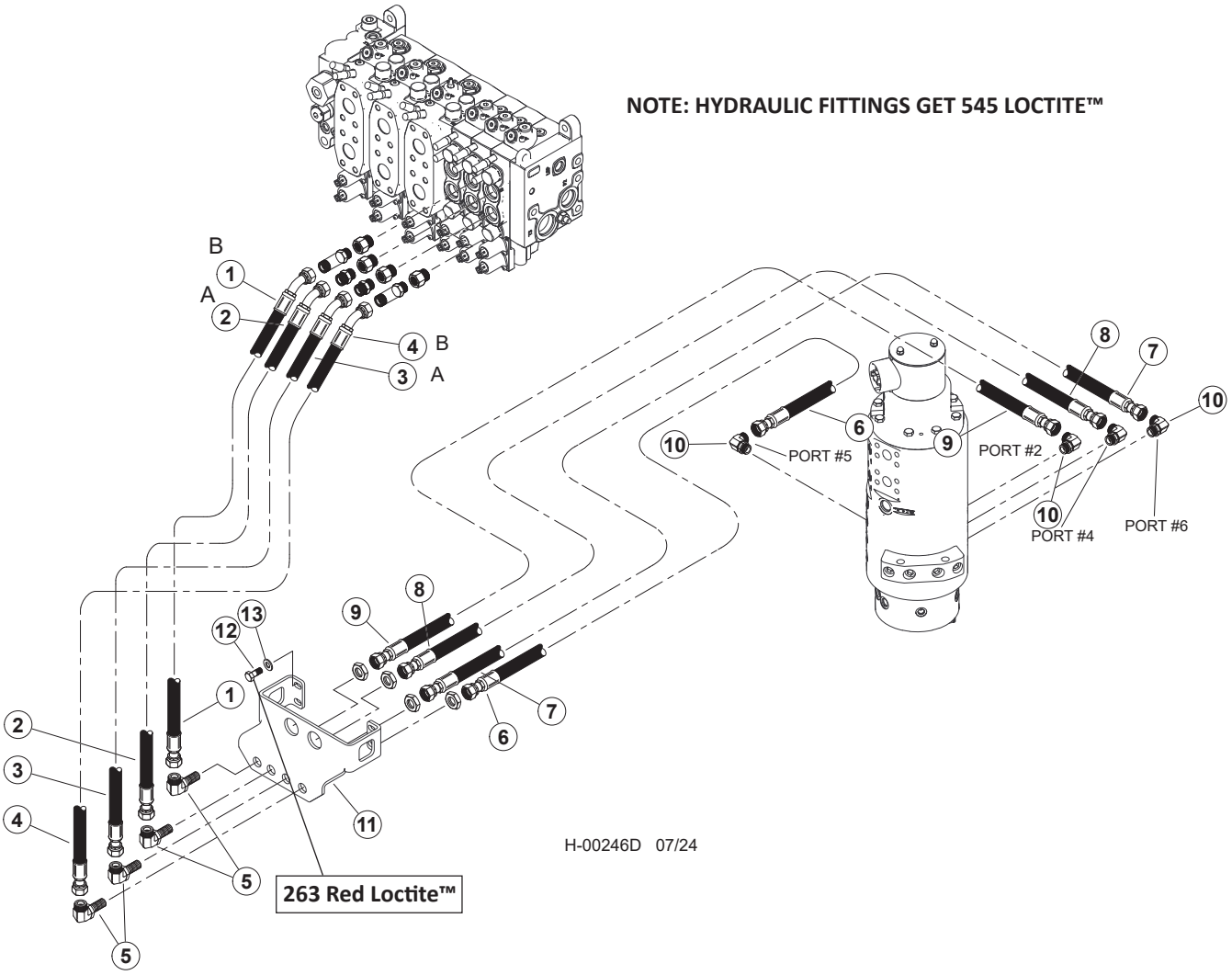

Item	Part #	Description	Qty.
1	65621 - (65619 - KIT)	HOSE, HYD, 787TC45 08-08OS-08O9 - **(VALVE PORT "B" TO BULKHEAD)**	1
2	65621 - (65619 - KIT)	HOSE, HYD, 787TC45 08-08OS-08O9 - **(VALVE PORT "B" TO BULKHEAD)**	1
3	65620 - (65619 - KIT)	HOSE, HYD, 787TC40.5 08-08OS-08O9 - **(VALVE PORT "A" TO BULKHEAD)**	1
4	65620 - (65619 - KIT)	HOSE, HYD, 787TC40.5 08-08OS-08O9 - **(VALVE PORT "A" TO BULKHEAD)**	1
	57947	KIT, FITTING TRACK LEVEL-D SERIES	1
5	24187	ELBOW, 90 BULKHEAD - 855BH-TT-08	4
6	65892 - (65891 - KIT)	HOSE ASSY - 787TC30 08-08OS-080S - **(BULKHEAD TO PORT #5 ON ROT MAN)**	1
7	65952 - (65891 - KIT)	HOSE ASSY - 787TC40 08-08OS-080S - **(BULKHEAD TO PORT #6 ON ROT MAN)**	1
8	65894 - (65891 - KIT)	HOSE ASSY - 787TC41.5 08-08OS-080S - **(BULKHEAD TO PORT #4 ON ROT MAN)**	1
9	65895 - (65891 - KIT)	HOSE ASSY - 787TC44 08-08OS-080S - **(BULKHEAD TO PORT #2 ON ROT MAN)**	1
10	16360	ELBOW, 90 - FF1868T-0808S	4
11	60559	BULHEAD, FRONT - TM	1
12	15542	BOLT - .375" X .75" **263 RED LOCTITE™**	2
13	15528	WASHER, SAE FLAT - .375" OR 3/8"	2

H100-01110 - FIXED STICK BOOM DANGLE PROCESSOR PIPING - MAIN BOOM CYLINDER (BULKHEAD FITTING TO CYLINDER)

NOTE: HYDRAULIC FITTINGS GET 545 LOCTITE™

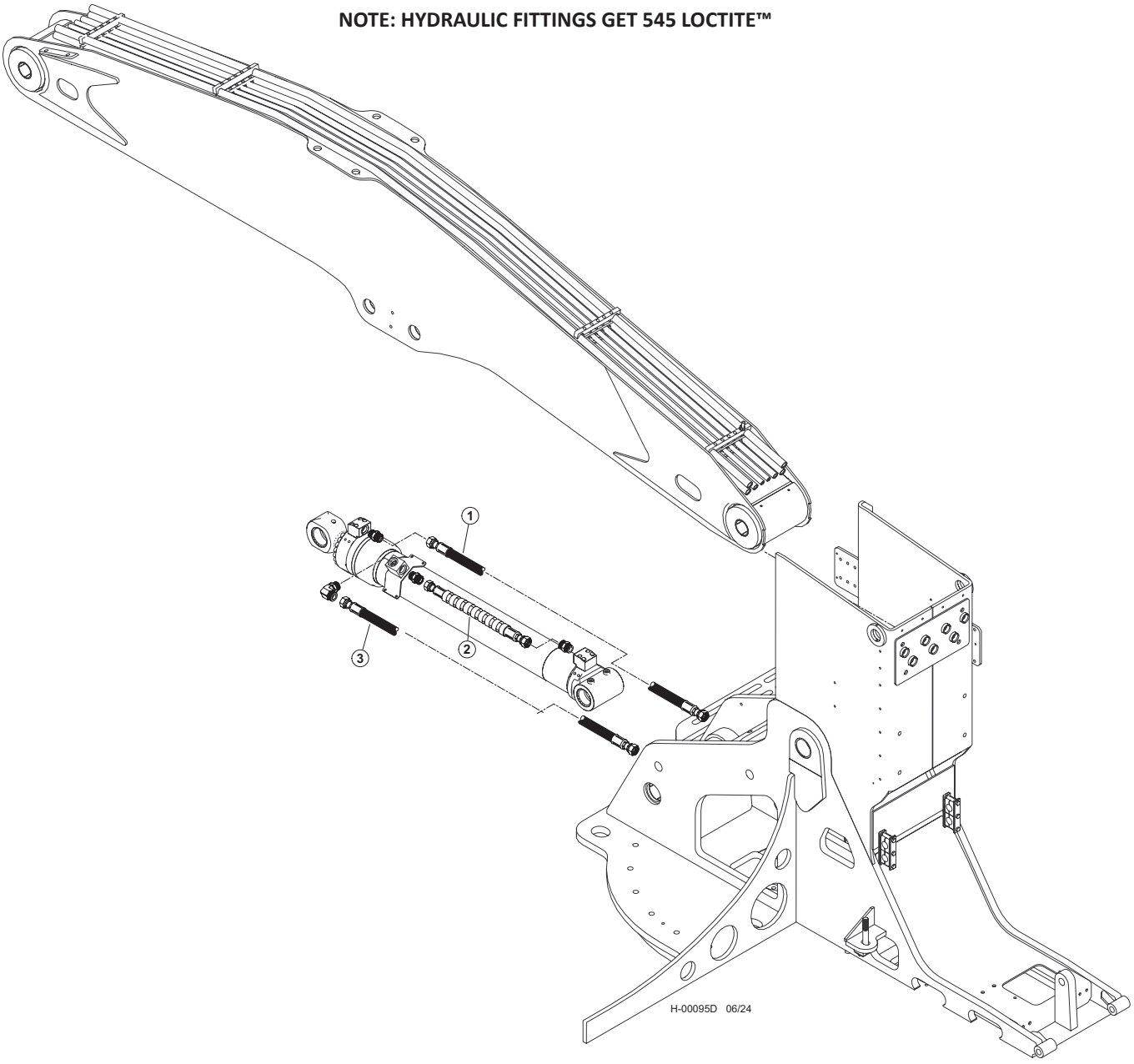

Item	Part #	Description	Qty.
1	65802 - (65799 -KIT)	HOSE, HYD, 787TC70 16-16OS-16OS **- (ROD END OF BOOM CYLINDER)**	1
2	65800 - (65799 - KIT)	HOSE, HYD, 787TC45.5 16-16OS-16OS-SW **- (BASE END OF BOOM CYLINDER TO BLOCK)**	1
3	65801 - (65799 - KIT)	HOSE, HYD, 787TC60 16-16OS-16OS **- (BASE END OF BOOM CYLINDER)**	1

H100-01120 - FIXED STICK BOOM DANGLE PROCESSOR PIPING - LIGHT WIRE (MAIN BOOM TO STICK BOOM)

NOTE: HYDRAULIC FITTINGS GET 545 LOCTITE™

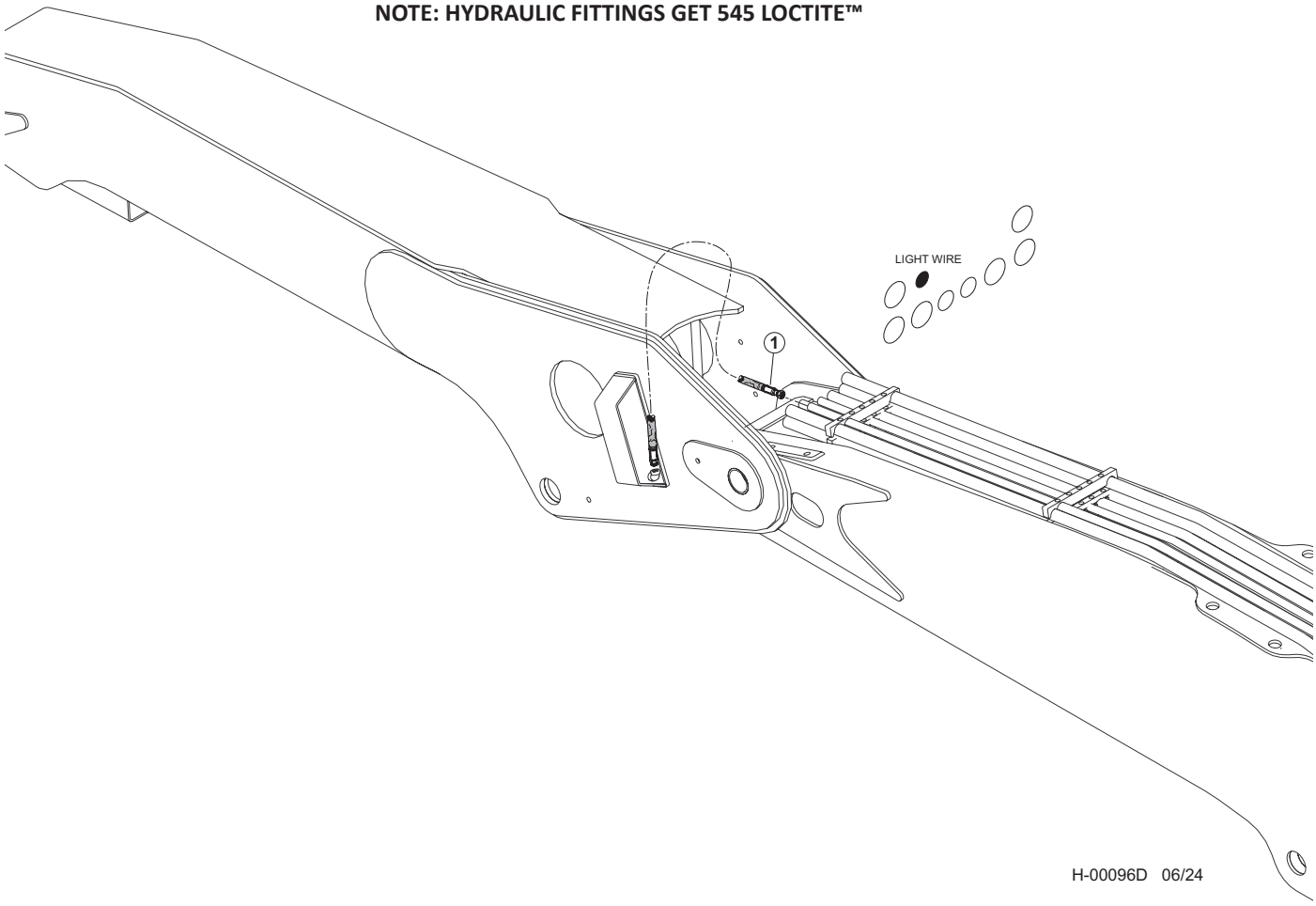

Item	Part #	Description	Qty.
1	664920 - (664870 - KIT)	HOSE, HYD, 387TC48 06-06OS-08PS-SW - **(LIGHT WIRE)**	1

H100-01130 - FIXED STICK BOOM DANGLE PROCESSOR PIPING - STICK BOOM (MAIN BOOM TO STICK CYLINDER)

NOTE: HYDRAULIC FITTINGS GET 545 LOCTITE™

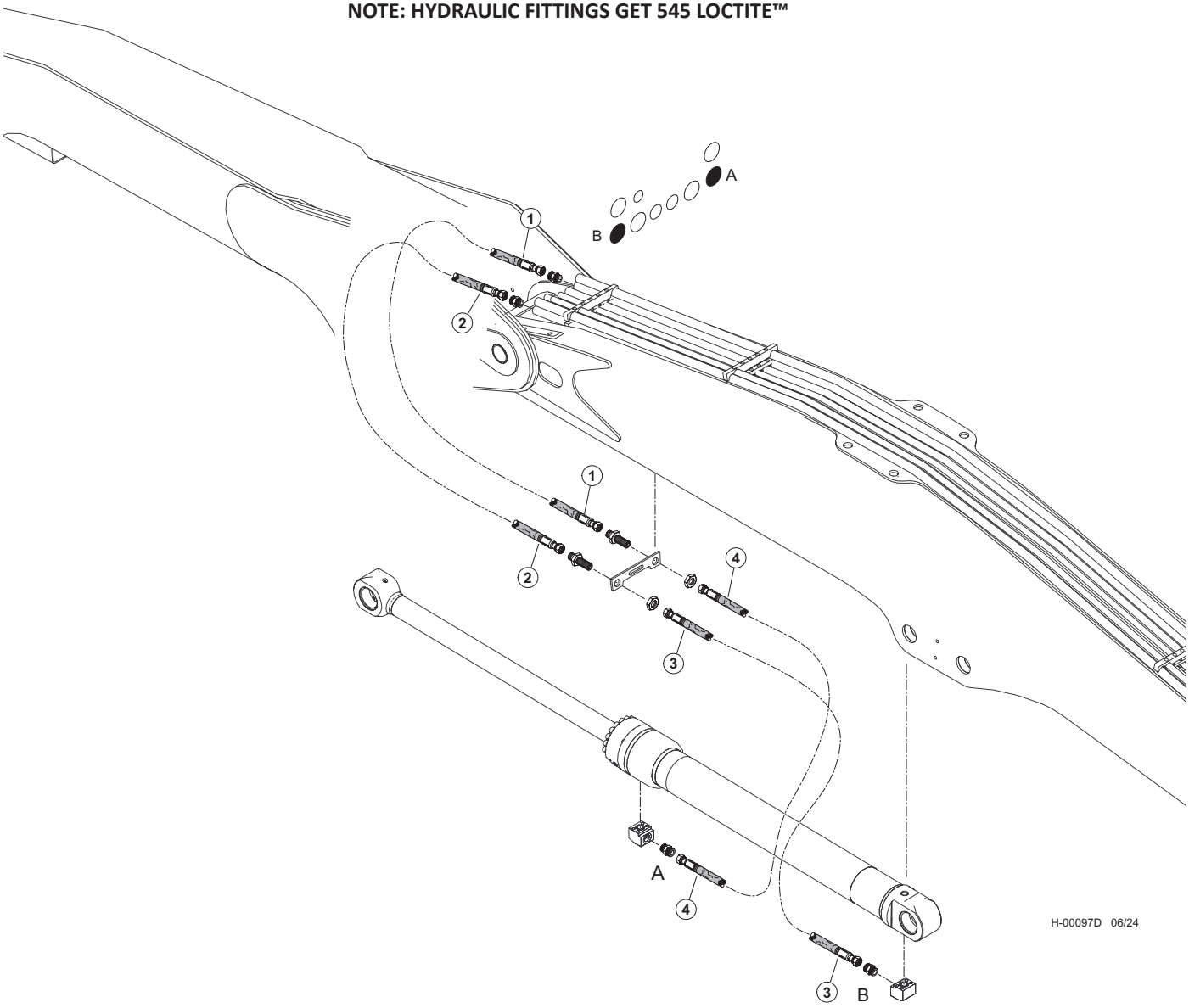

Item	Part #	Description	Qty.
1	665020 - (664870 - (KIT)	HOSE, HYD, 787TC76 16-16OS-16OS-W - **(STICK CYLINDER ROD)**	1
2	665020 - (664870 - (KIT)	HOSE, HYD, 787TC76 16-16OS-16OS-W - **(STICK CYLINDER BASE)**	1
3	665010 - (664880 - (KIT)	HOSE, HYD, 787TC57 16-16OS-16OS-W - **(STICK CYLINDER BASE)**	1
4	665000 - (664880 - (KIT)	HOSE, HYD, 787TC54 16-16OS-16OS-W - **(STICK CYLINDER ROD)**	1

H100-01140 - FIXED STICK BOOM DANGLE PROCESSOR PIPING - ROTATE (MAIN BOOM TO STICK BOOM)

NOTE: HYDRAULIC FITTINGS GET 545 LOCTITE™

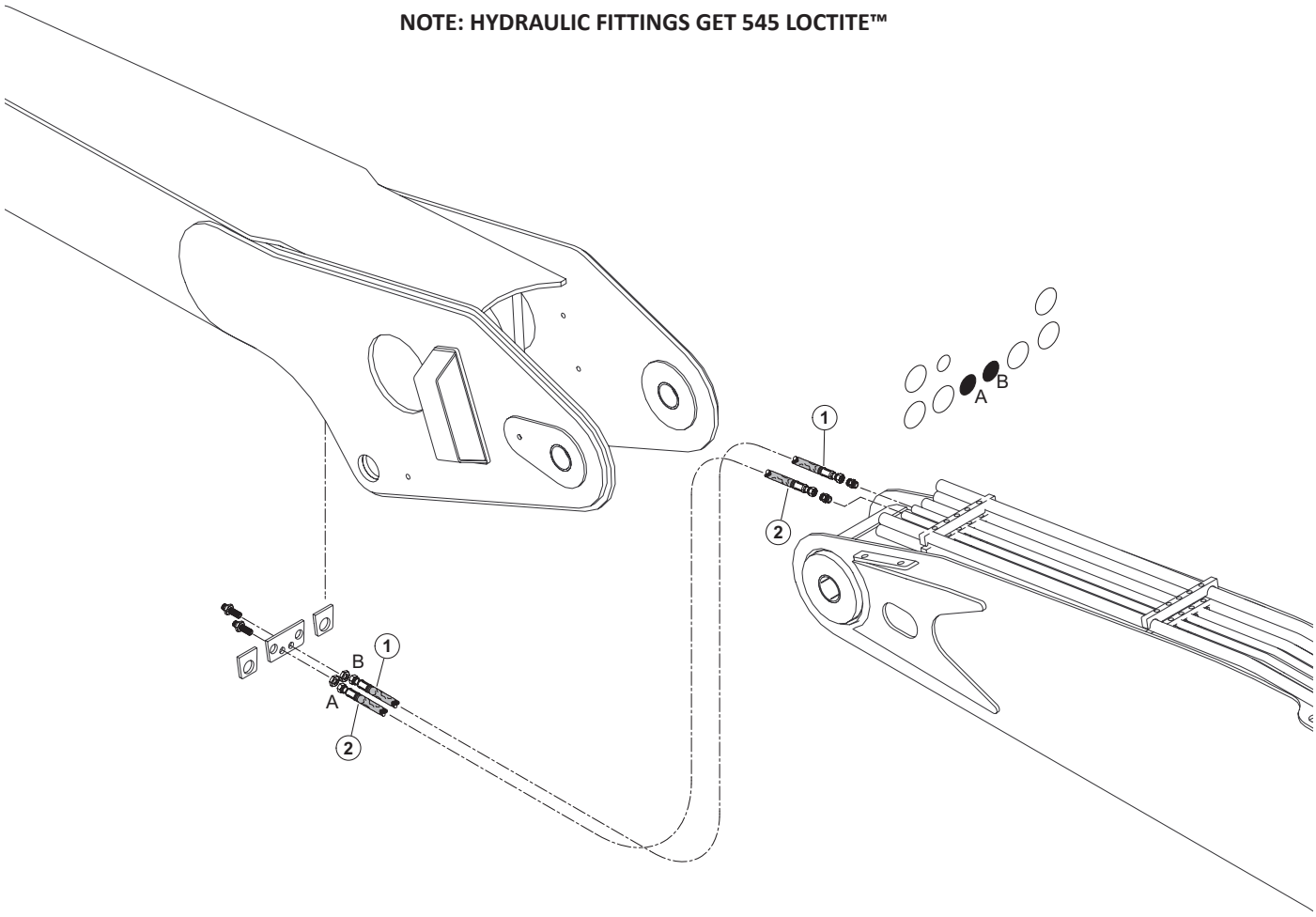

H-00098D 06/24

Item	Part #	Description	Qty.
1	664980 (664870 - KIT)	HOSE, HYD, 722TC77 08-08OS-08OS-W - (ROTATE “A”)	1
2	664980 (664870 - KIT)	HOSE, HYD, 722TC77 08-08OS-08OS-W - (ROTATE “B”)	1

H100-01150 - FIXED STICK BOOM DANGLE PROCESSOR PIPING - PRESSURE & RETURN (MAIN BOOM TO STICK BOOM)

NOTE: HYDRAULIC FITTINGS GET 545 LOCTITE™

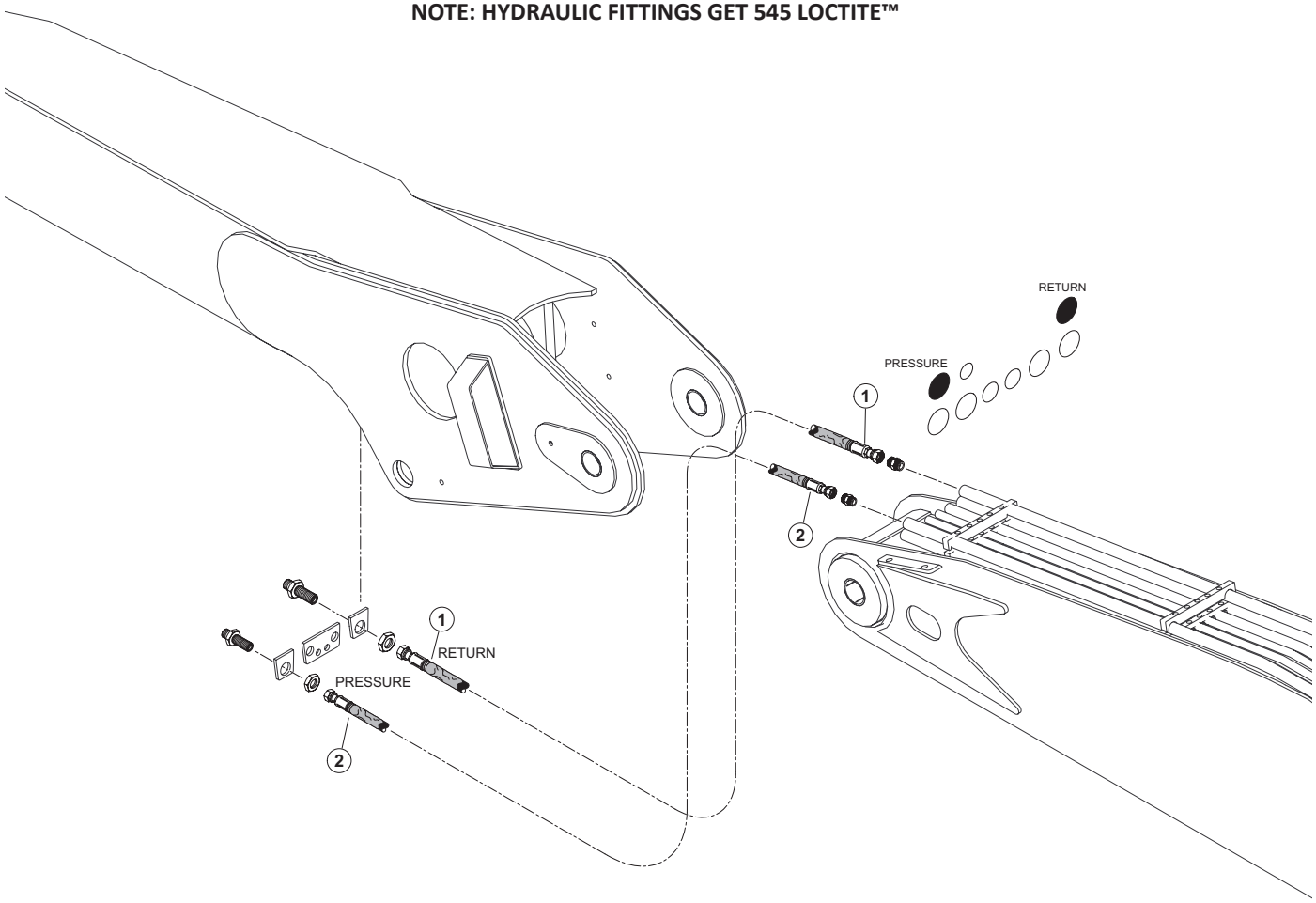

H-00099D 06/24

Item	Part #	Description	Qty.
1	665040- (664870 - KIT)	HOSE, HYD, 722TC77 20-20OS-20OS-W - **(RETURN)**	1
2	665030- (664870 - KIT)	HOSE, HYD, 787TC77 16-16OS-16OS-W - **(PRESSURE)**	1

H100-01160 - FIXED STICK BOOM DANGLE PROCESSOR PIPING - CASE DRAIN & ATTACHMENT ELEC. (MAIN BOOM TO STICK BOOM)

NOTE: HYDRAULIC FITTINGS GET 545 LOCTITE™

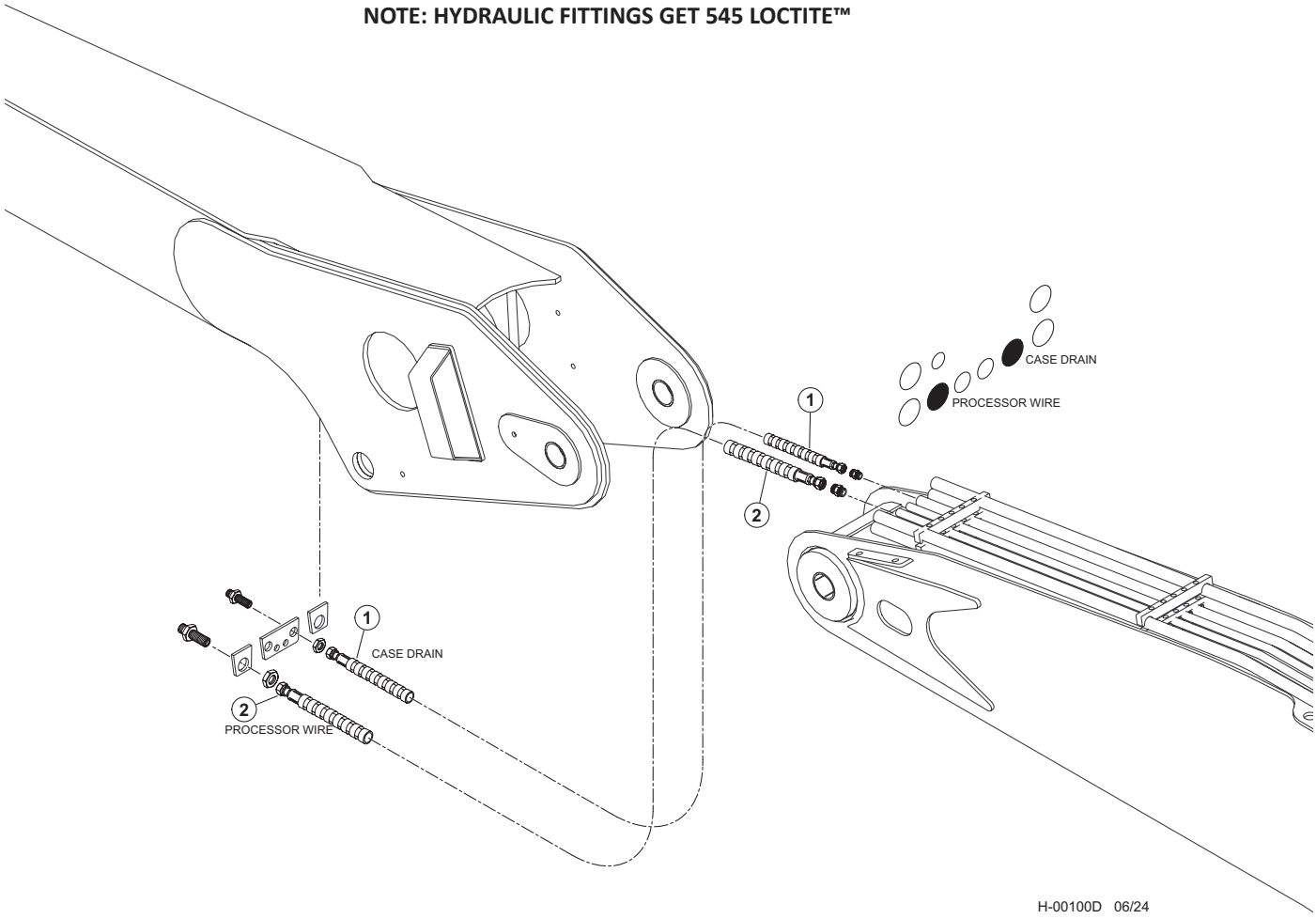

Item	Part #	Description	Qty.
1	664950 (664870 - KIT)	HOSE, HYD, 387TC77 12-12OS-12OS-SW - **(CASE DRAIN)**	1
2	664960 (664870 - KIT)	HOSE, HYD, 387TC77 16-16OS-16OS-SW - **(ATTACHMENT WIRE)**	1

H100-01170 - FIXED STICK BOOM DANGLE PROCESSOR PIPING - GREASE HOSES (MAIN BOOM TO STICK BOOM)

NOTE: HYDRAULIC FITTINGS GET 545 LOCTITE™

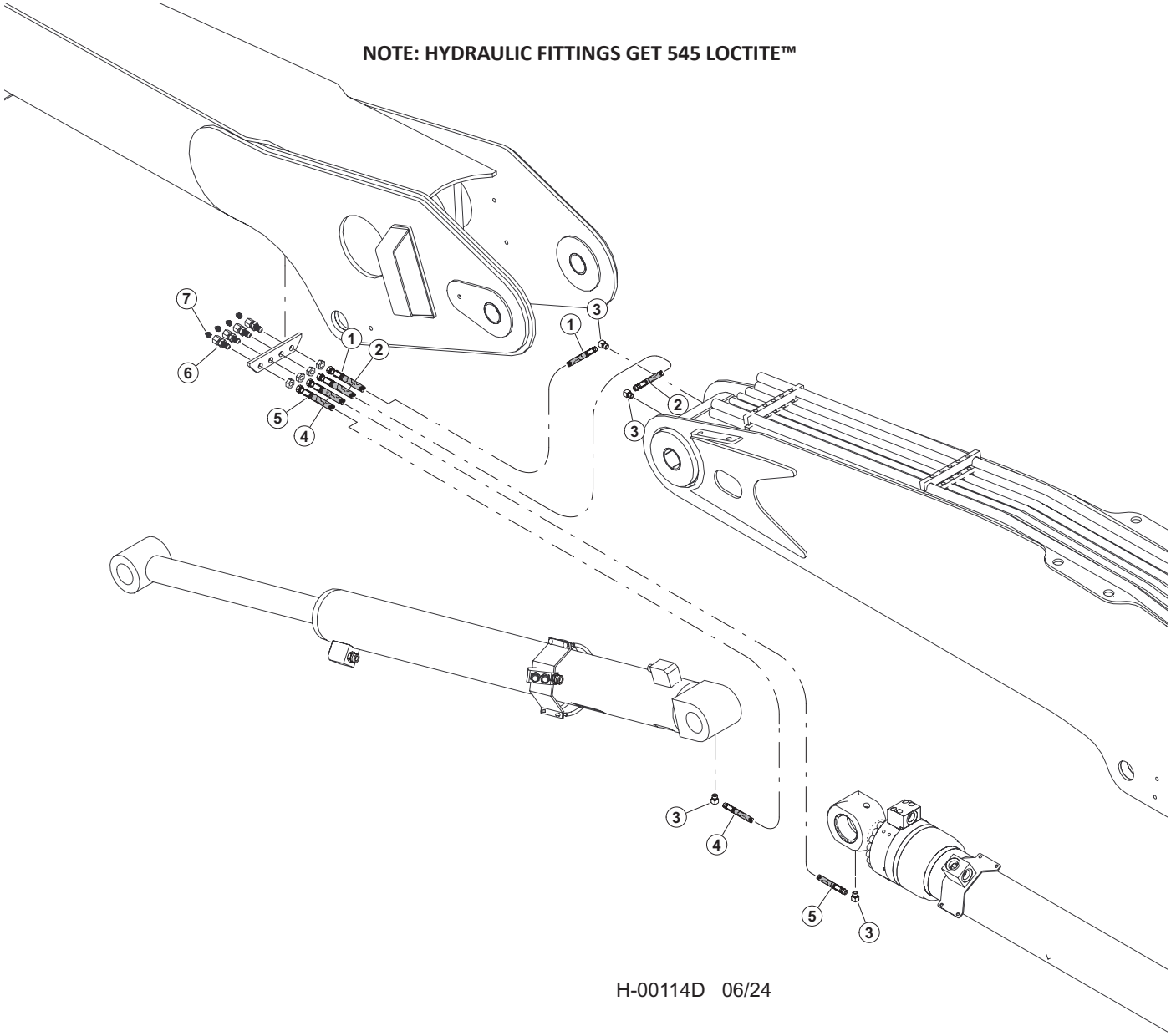

H-00114D 06/24

Item	Part #	Description	Qty.
1	**SEE DESCRIPTION**	HOSE ASSY - HLBD76 02-02PS-04JS - (MAIN BOOM TO BULKHEAD)	1
2	**SEE DESCRIPTION**	HOSE ASSY - HLBD76 02-02PS-04JS-WS100 - (MAIN BOOM TO BULKHEAD)	1
3	22281	ELBOW, 1/8-27 NPTF(M), 1/8-17 NPTF(F),90	4
4	58188 - (KIT)	HOSE ASSY - HLBD120 02-02PS-04JS-WS100 - (MAIN CYL. ROD TO BULKHEAD)	1
5	58188 - (KIT)	HOSE ASSY - HLBD120 02- 02PS-04JS-WS100 - (STICK CYL. BASE TO BULKHEAD)	1
6	15658	CONNECTOR, STR BULKHEAD - 2239-2-4S	4
7	10704	FITTING, GREASE - .125 NPT - STR	4

H100-01180 - MAIN BOOM PIPING - SQUIRT BOOM PROCESSOR

NOTE: HYDRAULIC FITTINGS GET 545 LOCTITE™

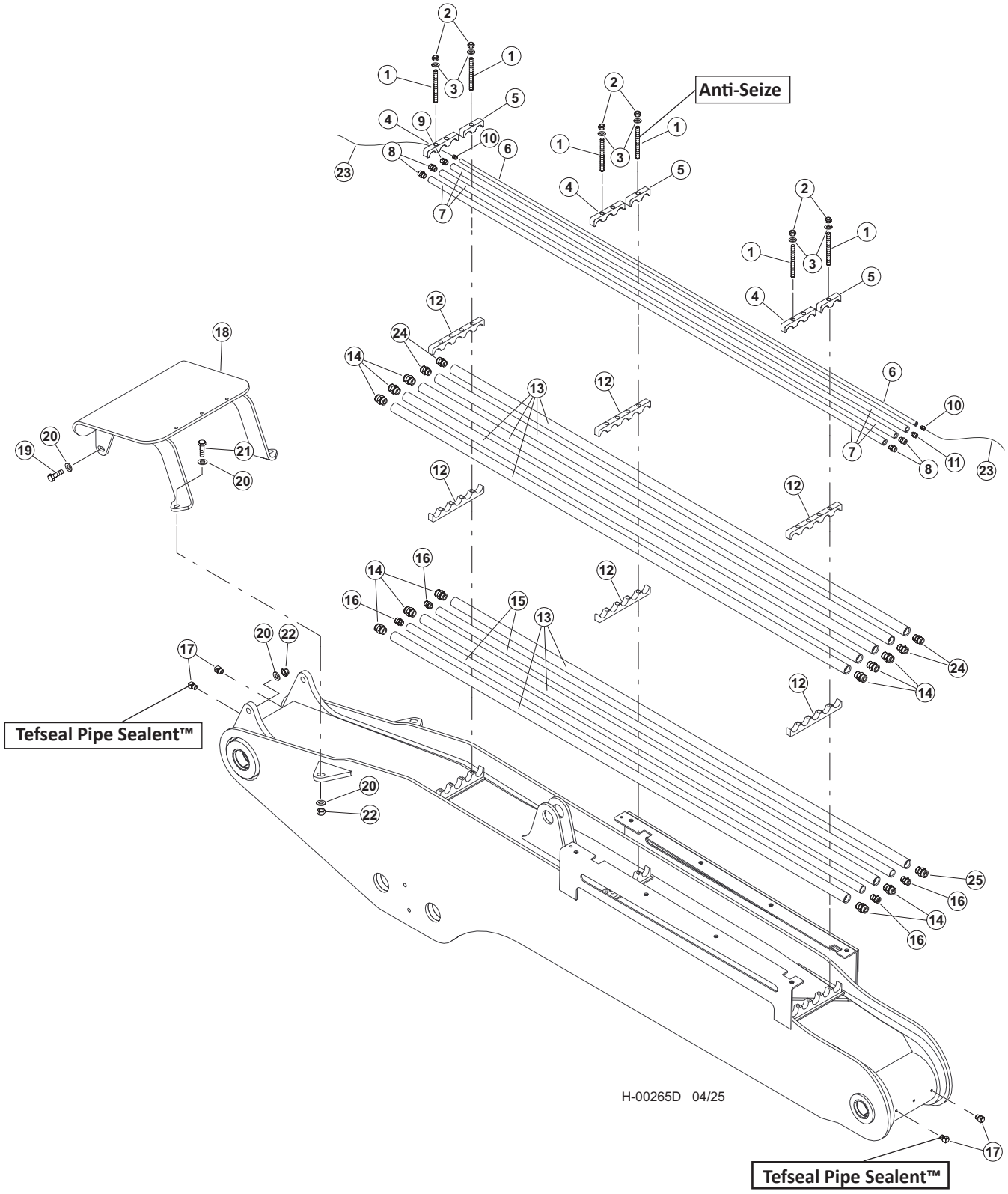

H100-01180 - MAIN BOOM PIPING - SQUIRT BOOM PROCESSOR

Item	Part #	Description	Qty.
1	17062	STUD - .625” X 8” **ANTI-SEIZE**	12
2	15563	NUT, NYLOCK - .625”	12
3	10771	WASHER, SAE FLAT - .625	12
4	17063	CONNECTOR, STR - FF1852T-2016S	3
5	53116	TUBELINE - .3/8” X 108” - BLACK PIPE	1
6	52866	CONNECTOR, STR - 10-16 F50LO-S	4
7	51878	CONNECTOR, STR - MALE PIPE (6-6 FLO-S)	2
8	52155	CLAMP, SADDLE - DRILLED (5-1” TUBES)	6
9	51833	TUBELINE - 1” X 108” FB MAIN	8
10	15226	CONNECTOR, STR - FF1852T-1216S	3
11	15225	CONNECTOR, STR - FF1852T-1616S	6
12	22281	ELBOW, 1/8-27 NPTF(M), 1/8-17 NPTF(F),90 **TEFSEAL PIPE SEALENT™**	4
13	53927	GUARD, HOSE - MAIN BOOM (FB)	1
14	58398	BOLT - .75” X 2.75”	2
15	10806	WASHER, FLAT - .75”	8
16	10840	BOLT - .75” X 3”	2
17	10817	NUT, LOCK - .75”	4
18	60289	PLATE, DEBRIS WEAR	1
19	62036	BOLT, FLAT HEAD -.5” X 1” DEBRIS GUARD **263 RED LOCTITE™**	8
20	58380	CABLE, 2-18 GA PVC UNSHIELDED	AR
21	53265	CLAMP, CUSHIONED LOOP - 5/8” (BOOM)	3
22	23264	BOLT - .25” X .5”	3
23	10757	WASHER, SAE FLAT - .25”	3
24	51834	TUBELINE - .75” X 108” FB MAIN	2
25	15152	CONNECTOR, STR - FF1852T-1212S	4

H100-01190 - STICK BOOM PIPING - SQUIRT BOOM PROCESSOR

NOTE: HYDRAULIC FITTINGS GET 545 LOCTITE™

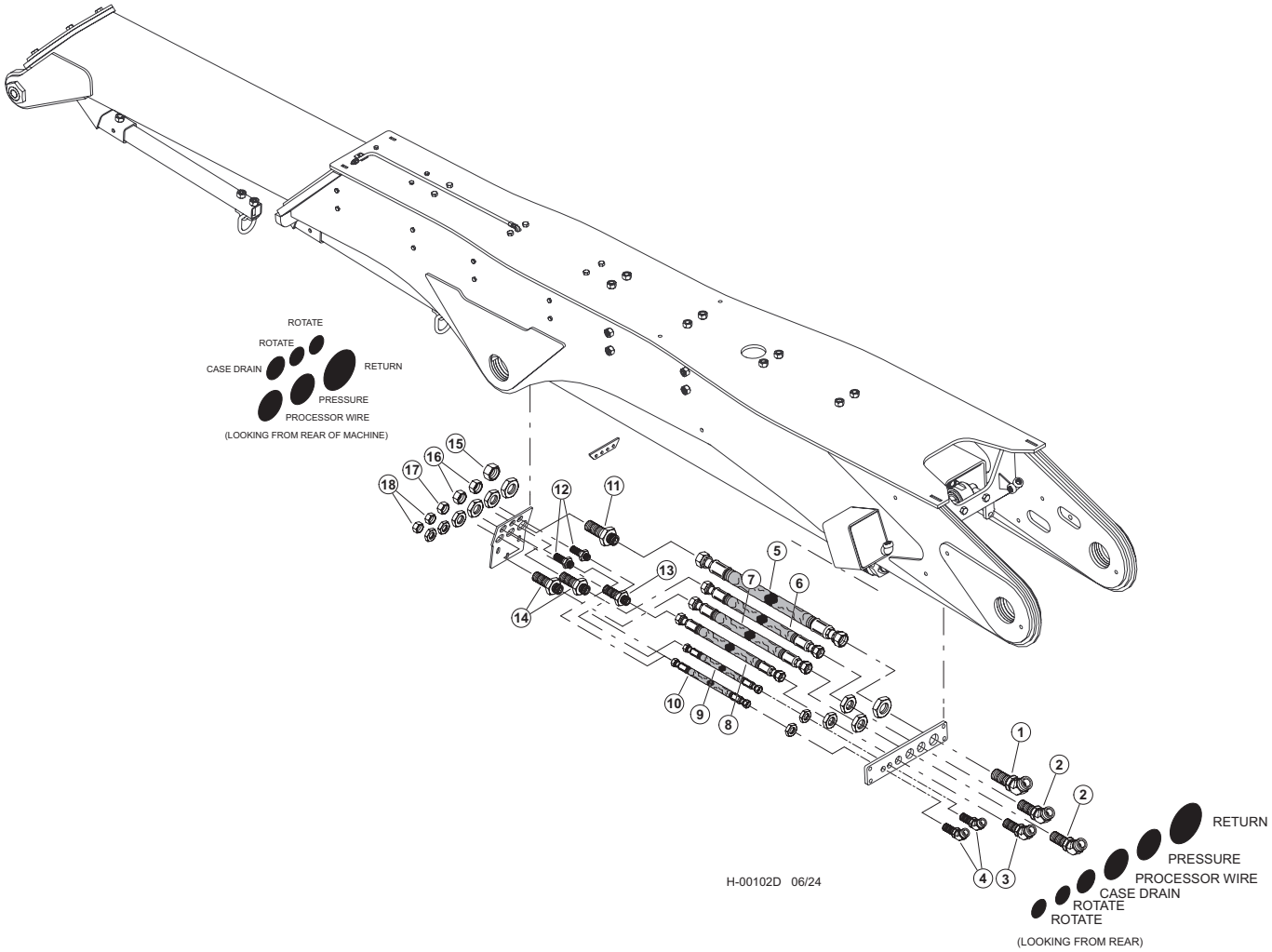

H100-01190 - STICK BOOM PIPING - SQUIRT BOOM PROCESSOR

Item	Part #	Description	Qty.
1	55197 - (665280 - KIT)	FITTING, #20 ORS X #20 ORS 45DEG	1
2	54316 - (665280 - KIT)	ELBOW, BULKHEAD UNION 45DEG #16	2
3	55509 - (665280 - KIT)	FITTING, BULKHEAD UNION - 45 DEGREE #12	1
4	55509 - (665280 - KIT)	FITTING, BULKHEAD ELBOW - 45 DEGREE #10	2
5	665210 - (665090 - (KIT)	HOSE, HYD, 187TC86.5 20-20OS-20OS-W **- (RETURN)**	1
6	665220 - (665090 - (KIT)	HOSE, HYD, 787TC86.5 16-16OS-16OS-SW **- (PRESSURE)**	1
7	665200 - (665090 - (KIT)	HOSE, HYD, 187TC86.5 16-16OS-16OS-SW **- (PROCESSOR WIRE)**	1
8	665190 - (665090 - (KIT)	HOSE, HYD, 187TC86.5 12-12OS-12OS-SW **- (CASE DRAIN)**	1
9	665230 - (665090 - (KIT)	HOSE, HYD, 722TC87 10-10OS-10OS-W **- (ROTATE “A”)**	1
10	665230 - (665090 - (KIT)	HOSE, HYD, 722TC87 10-10OS-10OS-W **- (ROTATE “B”)**	1
11	54743 - (665280 - KIT)	FITTING, 20 WLO-WLNL-S - BULKHEAD	1
12	50037 - (665280 - KIT)	CONNECTOR, STR BULKHEAD - 832-TT-10	2
13	19754 - (665280 - KIT)	CONNECTOR, STR BULKHEAD - 12 WLO-WLNL-S	1
14	20033 - (665280 - KIT)	CONNECTOR, STR BULKHEAD - 832-TT-16	2
15	17075 - (665280 - KIT)	CAP - FF9863-20S	1
16	15436 - (665280 - KIT)	CAP - FF9863-16S	2
17	15437 - (665280 - KIT)	CAP - FF9863-12S	1
18	52242 - (665280 - KIT)	CAP - 10 FNL-S	2

H100-01200 - SQUIRT BOOM PROCESSOR PIPING - PRESSURE, CASE DRAIN & LOAD SENSE - (K220/L90 VALVE) - VALVE TO BOOM

NOTE: HYDRAULIC FITTINGS GET 545 LOCTITE™

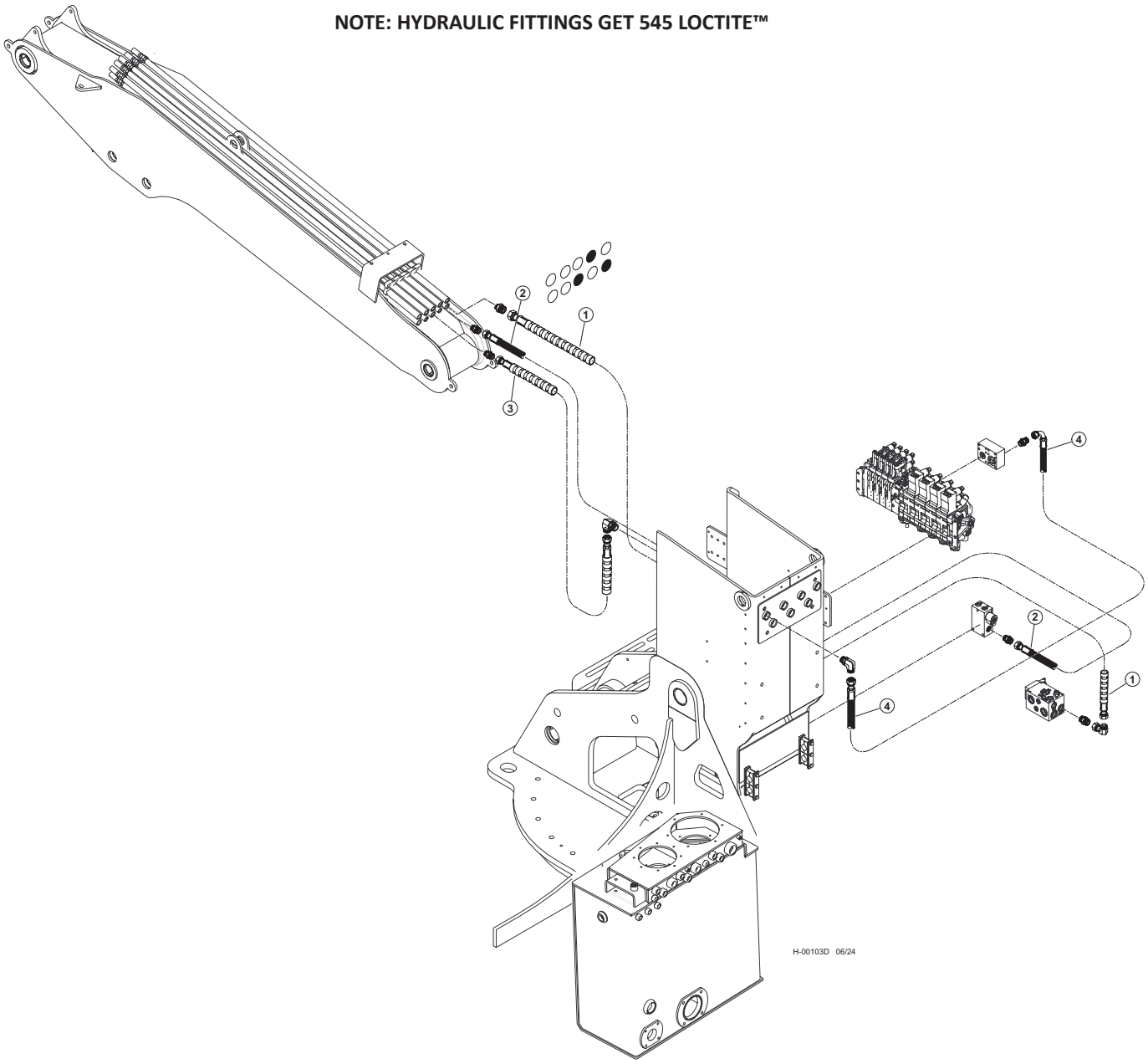

Item	Part #	Description	Qty.
1	55675 - (KIT)	HOSE ASSY - 187TC58 20-20JS-20OS-SW - (ATTACHMENT RETURN)	1
2	55675 - (KIT)	HOSE ASSY - 722TC54 12-12OS-12OS-W - (ATTACHMENT CASE DRAIN)	1
3	55675 - (KIT)	HOSE ASSY - 722TC40 16-16OS-16OS-SW - (ATTACHMENT PRESSURE)	1
4	(SEE DESCRIPTION)	HOSE ASSY - 787TC32 16-16OS-16O9 - (ATTACHMENT PRESSURE)	1

H200-00450 - SQUIRT BOOM PROCESSOR PIPING - PRESSURE, CASE DRAIN & LOAD SENSE - (W450/W300 VALVE) - VALVE TO BOOM

NOTE: HYDRAULIC FITTINGS GET 545 LOCTITE™

NOTE: APPLY GREASE TO O-RINGS

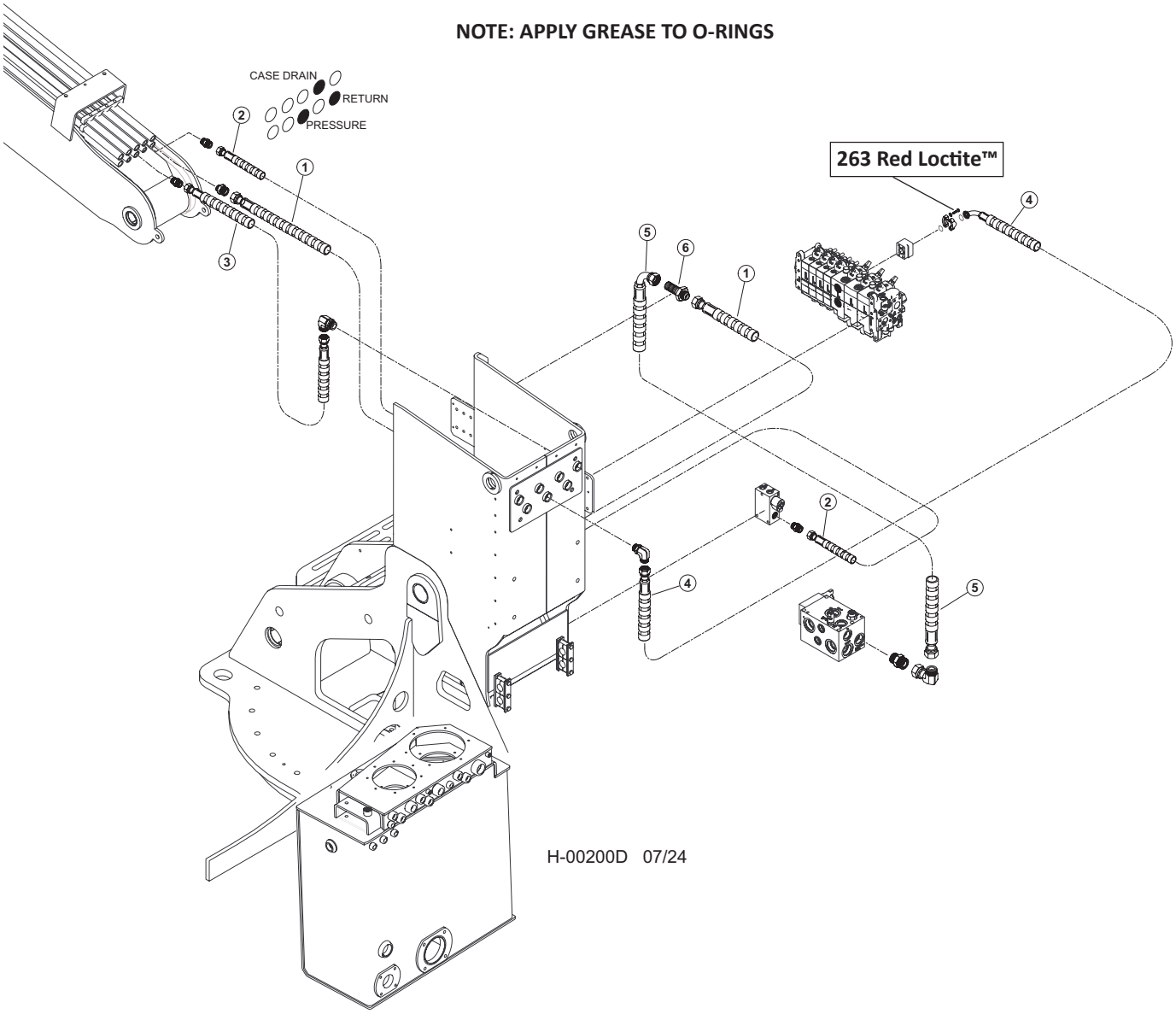

Item	Part #	Description	Qty.
1	66477 - (65991 - KIT)	HOSE, HYD, 187TC53 20-20JS-20OS-SW - **(ATTACHMENT RETURN)**	1
2	66485 - (65991 - KIT)	HOSE, HYD, 187TC54 12-12OS-12OS-SW - **(ATTACHMENT CASE DRAIN)**	1
3	65884 - (65991 - KIT)	HOSE, HYD, 787TC39 16-16OS-16OS-SW - **(VALVE PRESSURE)**	1
4	66478 - (65990 - KIT)	HOSE, HYD, 787TC38 16-16OS-20PH9-SW - **(VALVE PRESSURE)**	1
5	65677 - (65991 - KIT)	HOSE, HYD, 187TC42 20-20JS-20J9-SW - **(RETURN)**	1
6	57491- (57950- KIT)	FITTING, 20 WTX-WLN-S	1

H100-01210 - SQUIRT BOOM PROCESSOR PIPING - STICK BOOM CYLINDER (K220/L90 VALVE) MAIN VALVE TO BOOM

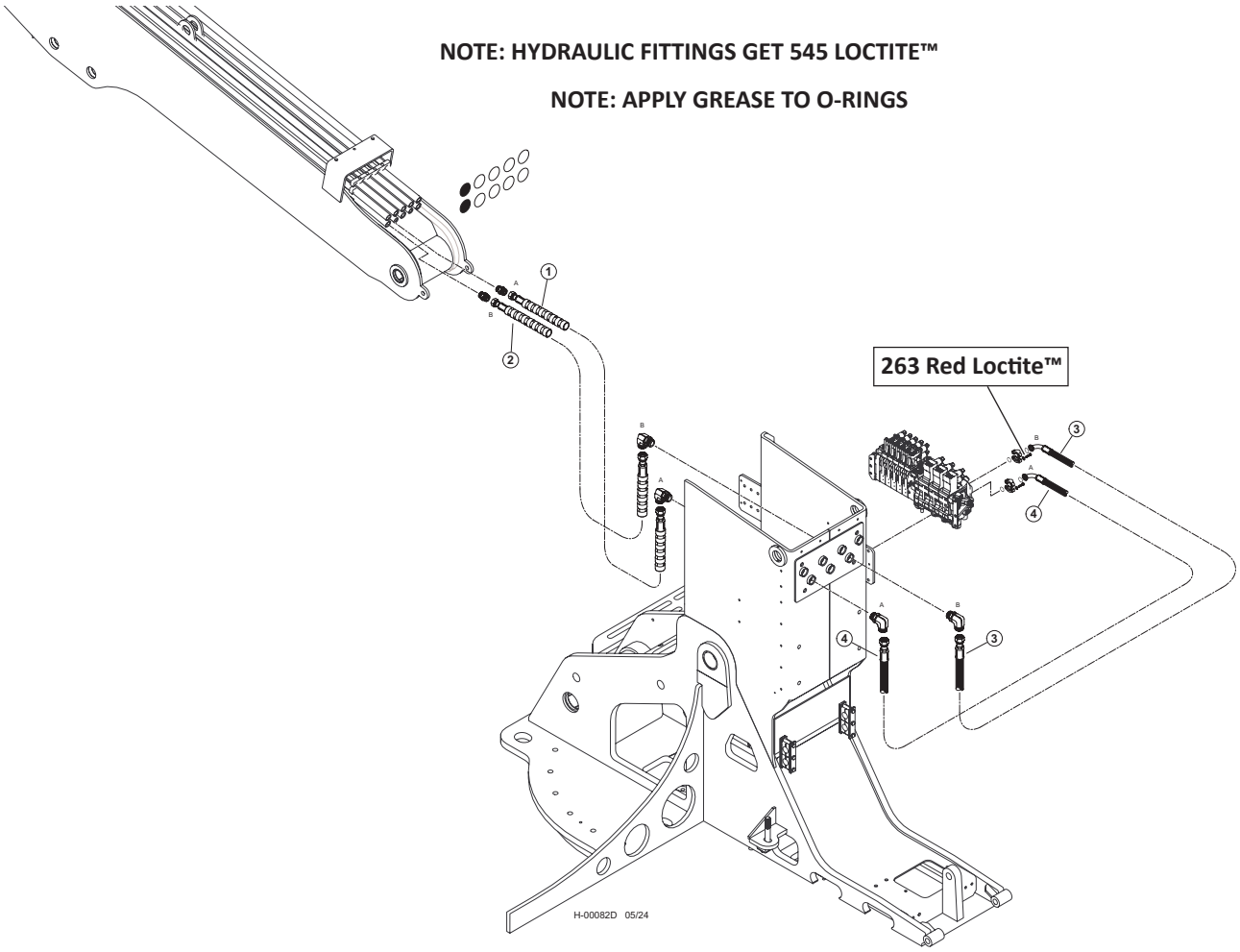

Item	Part #	Description	Qty.
1	55675 - (KIT)	HOSE ASSY - 722TC39 16-16OS-16OS-SW - (STICK CYLINDER “A”)	1
2	55675 - (KIT)	HOSE ASSY - 722TC39 16-16OS-16OS-SW - (STICK CYLINDER “B”)	1
3	55675 - (KIT)	HOSE ASSY - 722TC40 16-16OS-16PA9 - (STICK CYLINDER “B”)	1
4	55675 - (KIT)	HOSE ASSY - 722TC39 16-16OS-16PA9 - (STICK CYLINDER “A”)	1

H200-00460 - SQUIRT BOOM PROCESSOR PIPING - STICK BOOM CYLINDER (W450/W300 VALVE) - MAIN VALVE TO BOOM

NOTE: HYDRAULIC FITTINGS GET 545 LOCTITE™

NOTE: APPLY GREASE TO O-RINGS

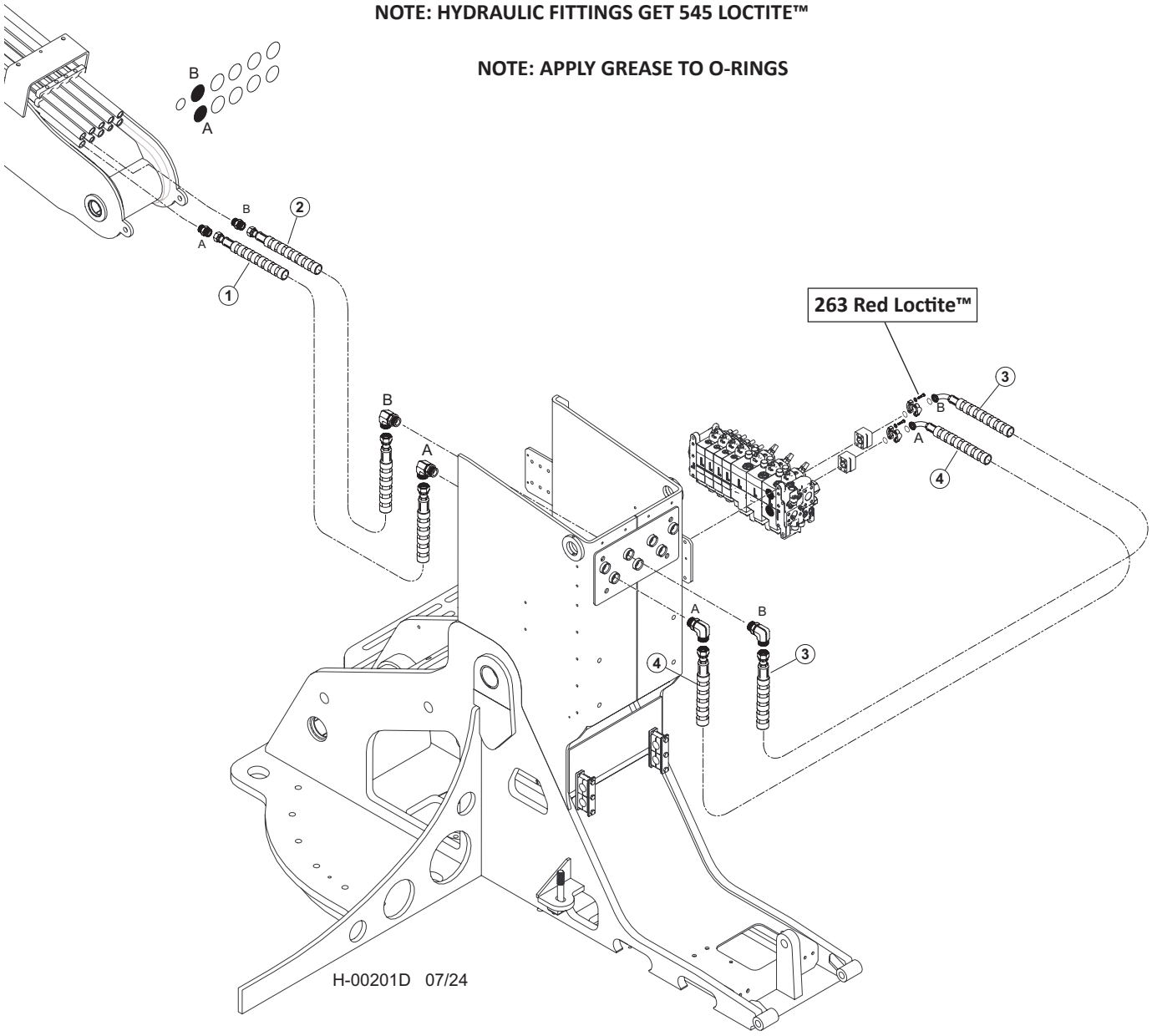

Item	Part #	Description	Qty.
1	66484 - (65990 - KIT)	HOSE, HYD, 787TC39.5 16-16OS-20PH9-SW **("A" PORT - CHIMNEY TO BOOM)**	1
2	65460 - (65990 - KIT)	**H**OSE, HYD, 787TC36 16-16OS-20PH9-SW **("B" PORT - CHIMNEY TO BOOM)**	1
3	65885 - (65991 - KIT)	HOSE, HYD, 787TC40 16-16OS-16OS-SW **("B" PORT - VALVE TO CHIMNEY)**	1
4	65884 - (65991 - KIT)	HOSE, HYD, 787TC39 16-16OS-16OS-SW **("A" PORT - VALVE TO CHIMNEY)**	1

H100-01220 - SQUIRT BOOM PROCESSOR PIPING - MAIN BOOM (K220/L90 VALVE)
MAIN VALVE TO BOOM

NOTE: HYDRAULIC FITTINGS GET 545 LOCTITE™

NOTE: APPLY GREASE TO O-RINGS

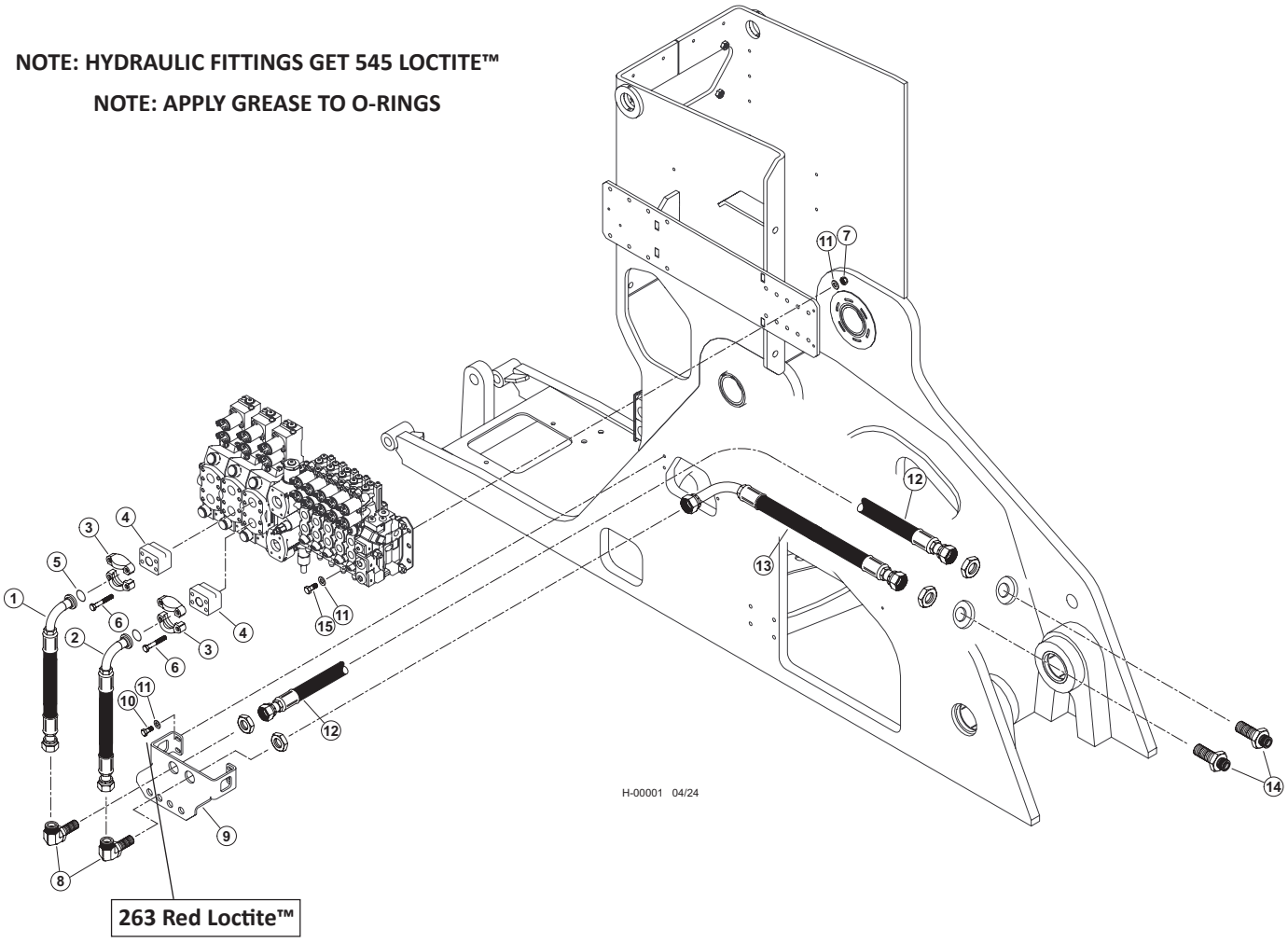

Item	Part #	Description	Qty.
1	59741 - (KIT)	HOSE ASSY - 787TC35.5 16-16OS-16PA9 - (BOOM “B”)	1
2	59741 - (KIT)	HOSE ASSY - 787TC31 16-16OS-16PA9 - (BOOM “A”)	1
3	15111	KIT, SPLIT FLANGE CODE 61 1 INCH	2
4	46248	MANIFOLD, VALVE BLOCK SAE 1” CODE 62	2
5	15377	O-RING - 1” SF	2
6	55664	BOLT, ALLEN HEAD - 10MM-1.5P X 80MM	8
7	10813	NUT, LOCK - .375”	4
8	53680	FITTING, BULKHEAD UNION ELBOW 16 WELO-WN	2
9	60559	BULHEAD, FRONT - TM	1
10	15542	BOLT - .375” X .75” **263 RED LOCTITE™**	4
11	15528	WASHER, SAE FLAT - .375”	12
12	59741 - (KIT)	HOSE ASSY - 787TC43 16-16OS-16OS **(MAIN BOOM CYLINDER BASE END BULKHEAD TO BULKHEAD PLATE)**	1
13	59741 - (KIT)	HOSE ASSY - 787TC30 16-16OS-16O9L **(MAIN BOOM CYLINDER ROD END BULKHEAD TO BULKHEAD PLATE)**	1
14	54316	ELBOW, BULKHEAD UNION 45DEG #16	2
15	10402	BOLT - .375” X 1.25”	4

H200-00470 - SQUIRT BOOM PROCESSOR PIPING - MAIN BOOM (W450/W300 VALVE)
MAIN VALVE TO BOOM

NOTE: HYDRAULIC FITTINGS GET 545 LOCTITE™

NOTE: APPLY GREASE TO O-RINGS

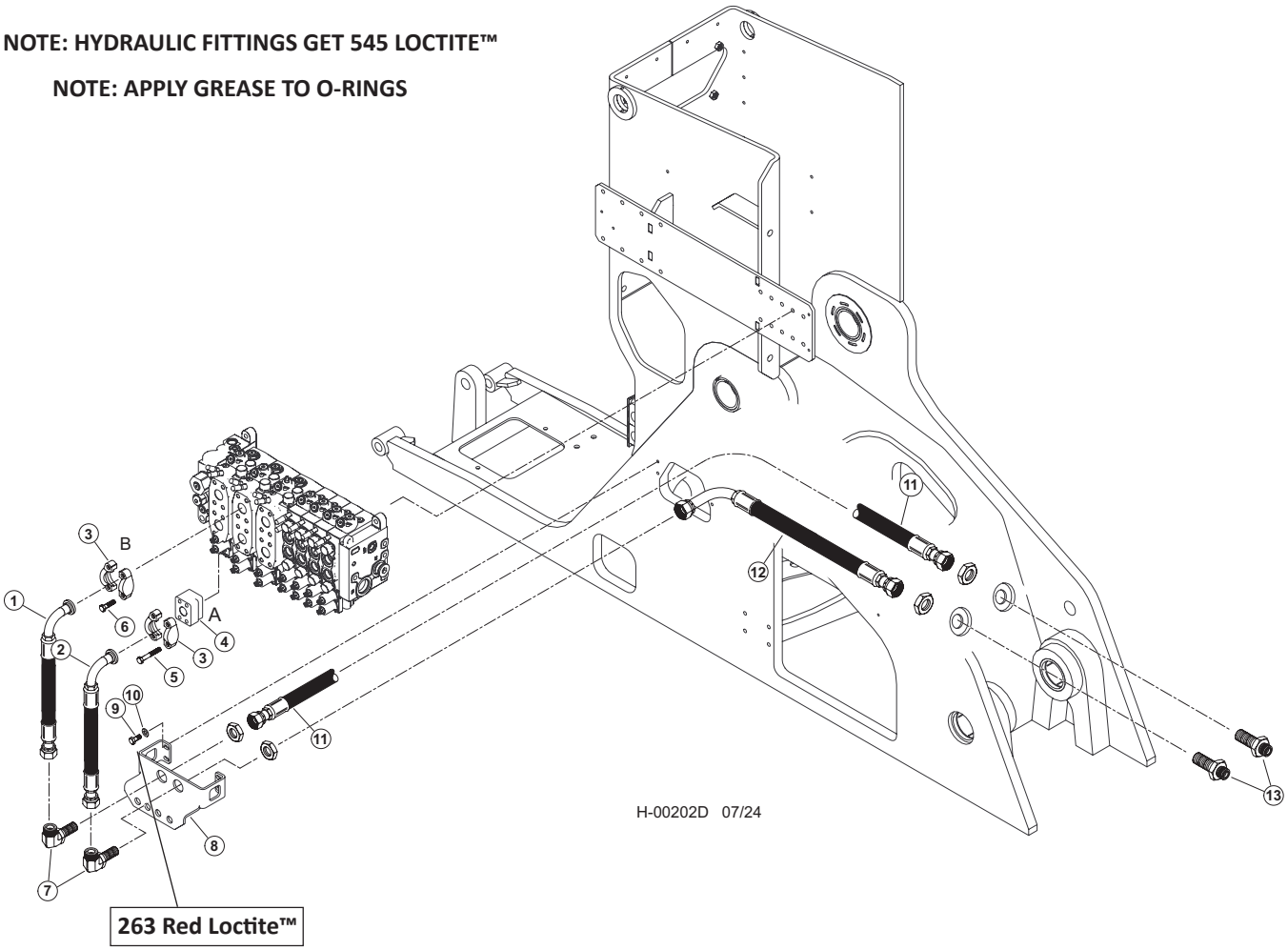

Item	Part #	Description	Qty.
1	65460 - (65812- KIT)	HOSE, HYD, 787TC36 16-16OS-20PH9-SW - **(BOOM "B")**	1
2	65459 - (65812 - KIT)	HOSE, HYD, 787TC32 16-16OS-20PH9-SW - **(BOOM "A")**	1
3	15111	KIT, SPLIT FLANGE CODE 61 1 INCH	2
4	65458	ANCHOR-ASX-20GP STANDOFF	2
5	55664	BOLT, ALLEN HEAD - 10MM-1.5P X 80MM	8
6	53680	FITTING, BULKHEAD UNION ELBOW 16 WELO-WN	4
7	60559	BULHEAD, FRONT - TM	2
8	10402	BOLT - .375" X 1.25"	2
9	15528	WASHER, SAE FLAT - .375" **263 RED LOCTITE™**	2
10	65803 - (65799 - KIT)	HOSE, HYD, 787TC43 16-16OS-16OS	12
		(MAIN BOOM CYLINDER BASE END BULKHEAD TO BULKHEAD PLATE)	1
11	65804 - (65799 - KIT)	HOSE, HYD, 787TC30 16-16OS-16O9L	
		(MAIN BOOM CYLINDER ROD END BULKHEAD TO BULKHEAD PLATE)	1
12	54316	ELBOW, BULKHEAD UNION 45DEG #16	2

H100-01230 - SQUIRT BOOM PROCESSOR PIPING - MAIN BOOM CYLINDER (BULKHEAD FITTING TO CYLINDER)

NOTE: HYDRAULIC FITTINGS GET 545 LOCTITE™

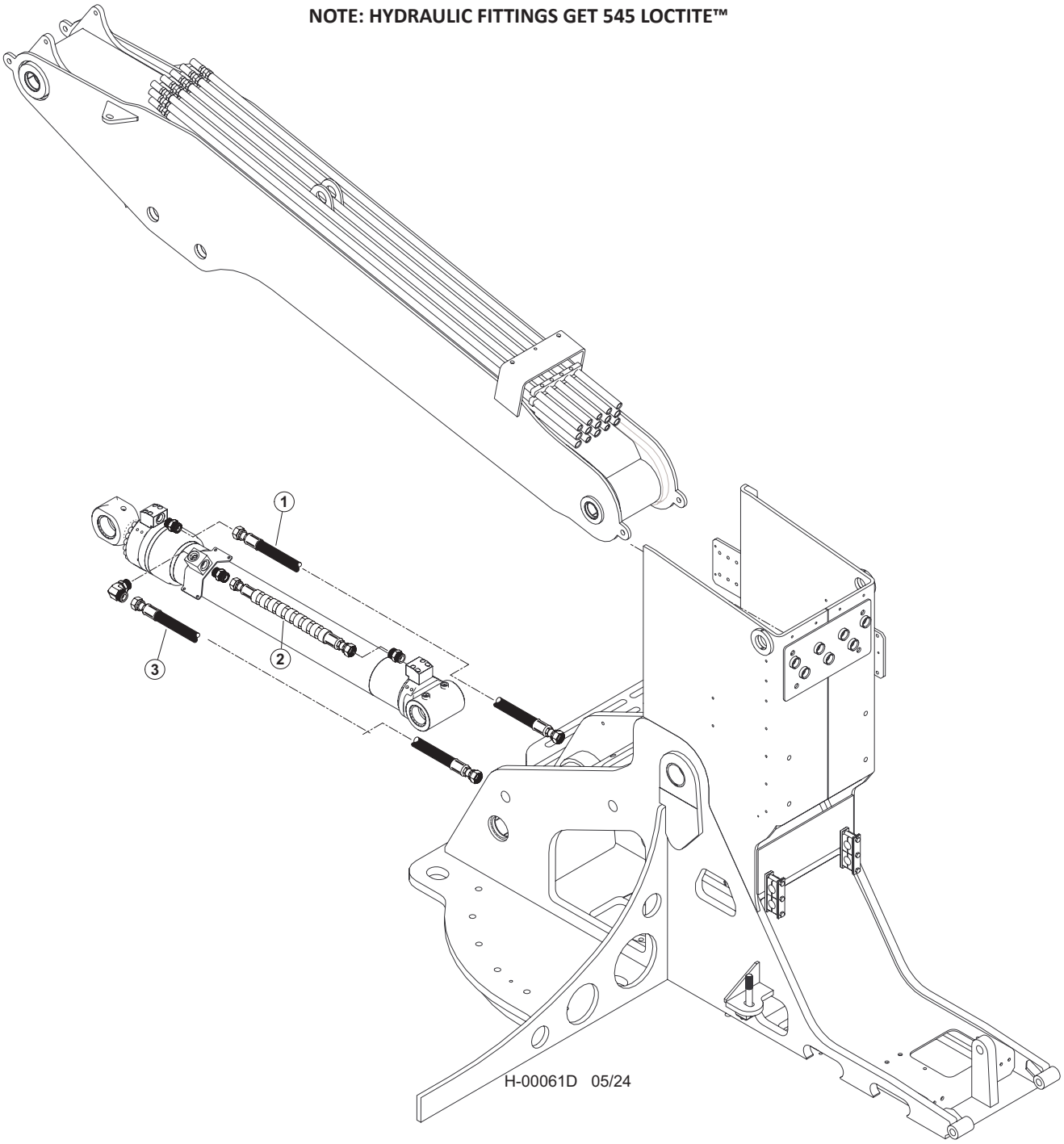

Item	Part #	Description	Qty.
1	65802 - (65799 -KIT)	HOSE, HYD, 787TC70 16-16OS-16OS - **(ROD END OF BOOM CYLINDER)**	1
2	65800 - (65799 - KIT)	HOSE, HYD, 787TC45.5 16-16OS-16OS-SW - **(BASE END OF BOOM CYLINDER TO BLOCK)**	1
3	65801 - (65799 - KIT)	HOSE, HYD, 787TC60 16-16OS-16OS - **(BASE END OF BOOM CYLINDER)**	1

H100-01240 - SQUIRT BOOM PROCESSOR PIPING - SQUIRT (K220/L90 VALVE)
MAIN VALVE TO BOOM

NOTE: HYDRAULIC FITTINGS GET 545 LOCTITE™

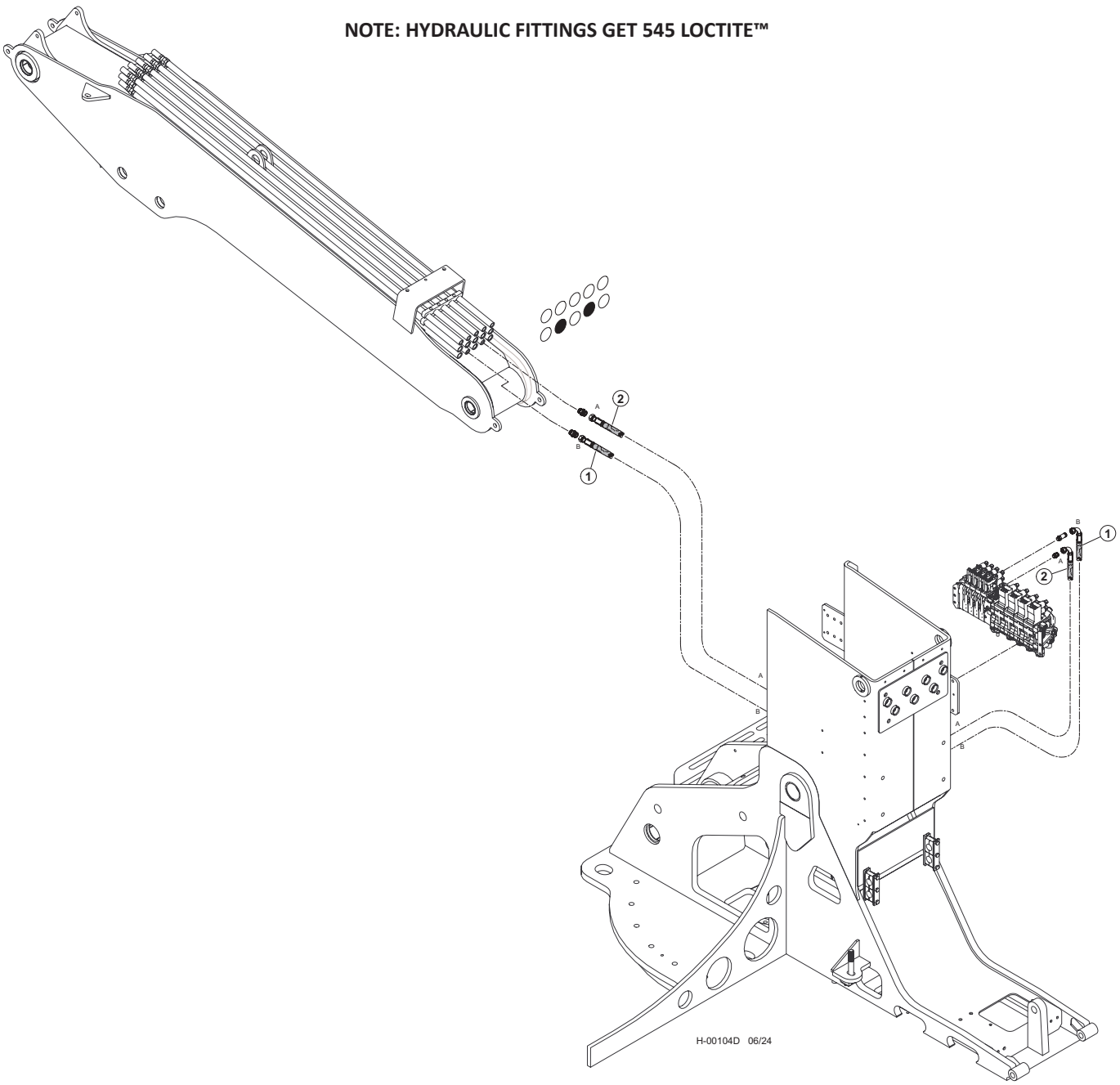

Item	Part #	Description	Qty.
1	55675 - (KIT)	HOSE ASSY - 722TC64 12-12OS-12O9-W - (ROTATE “B”)	1
2	55675 - (KIT)	HOSE ASSY - 722TC65 12-12OS-12O9-W - (ROTATE “A”)	1

H200-00480 - SQUIRT BOOM PROCESSOR PIPING - SQUIRT (W450/W300 VALVE)
MAIN VALVE TO BOOM

NOTE: HYDRAULIC FITTINGS GET 545 LOCTITE™

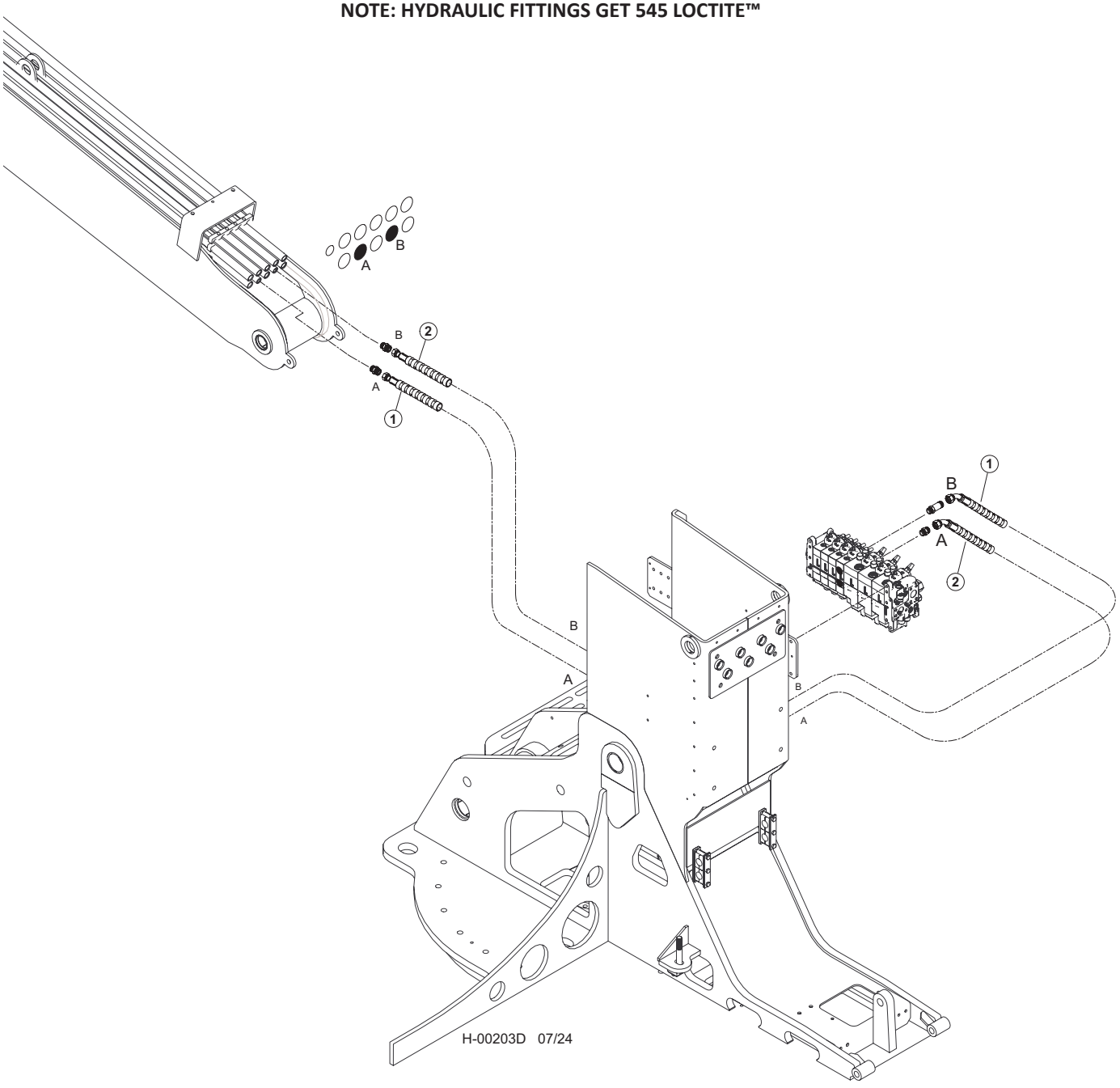

Item	Part #	Description	Qty.
1	66475 - (65990 - KIT)	HOSE, HYD, 722TC72 12-102OS-12O4-W - **(ROTATE "B")**	1
2	66475 - (65990 - KIT)	HOSE, HYD, 722TC72 12-102OS-12O4-W - **(ROTATE "A")**	1

H100-01250 - SQUIRT BOOM PROCESSOR PIPING - ROTATE (K220/L90 VALVE)
MAIN VALVE TO BOOM

NOTE: HYDRAULIC FITTINGS GET 545 LOCTITE™

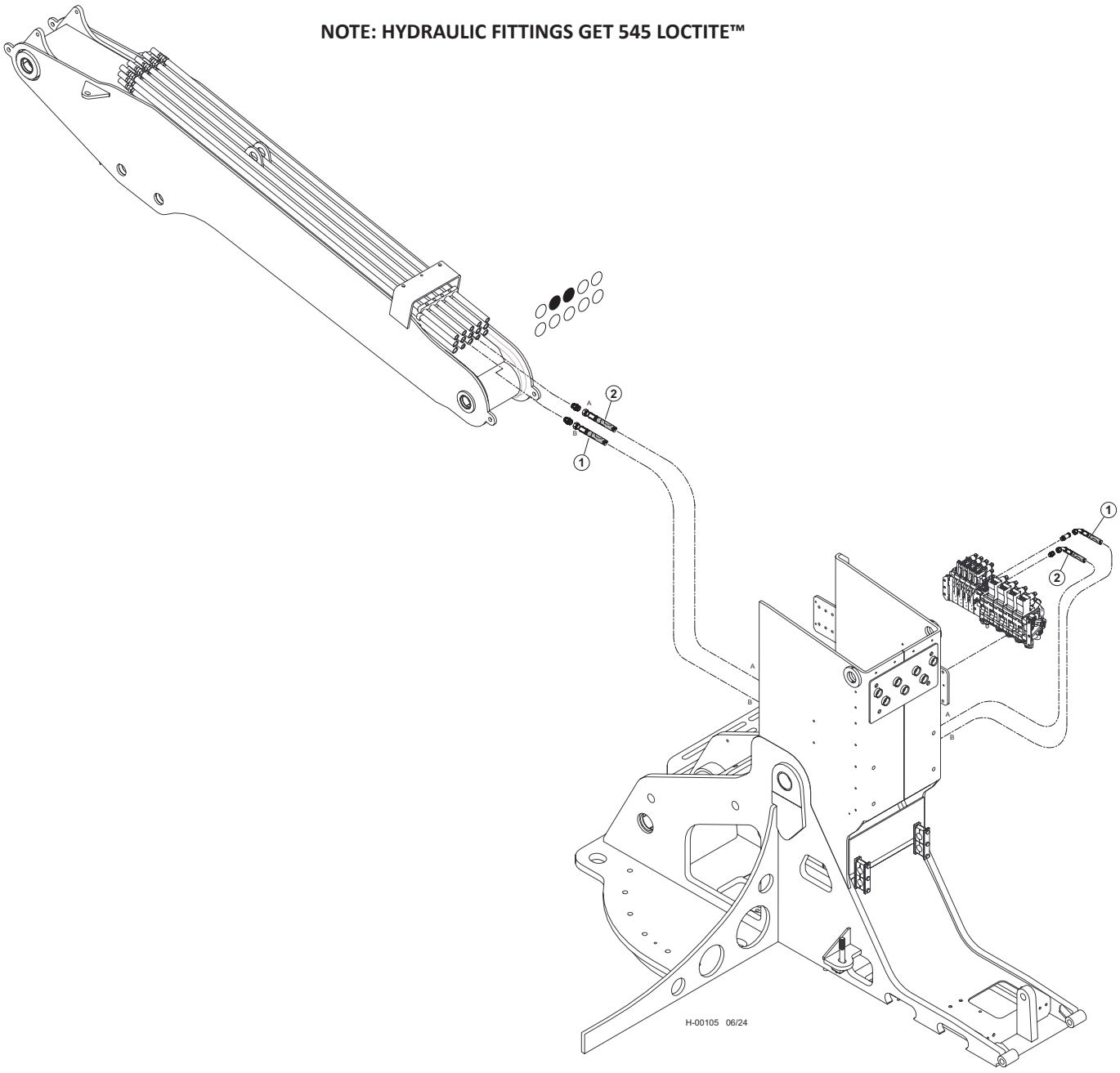

Item	Part #	Description	Qty.
1	55675 - (KIT)	HOSE ASSY - 722TC65 10-10OS-10O4-W - (ROTATE “B”)	1
2	55675 - (KIT)	HOSE ASSY - 722TC64 10-10OS-10O4-W - (ROTATE “A”)	1

H200-00490 - SQUIRT BOOM PROCESSOR PIPING - ROTATE (W450/W300 VALVE)
MAIN VALVE TO BOOM

NOTE: HYDRAULIC FITTINGS GET 545 LOCTITE™

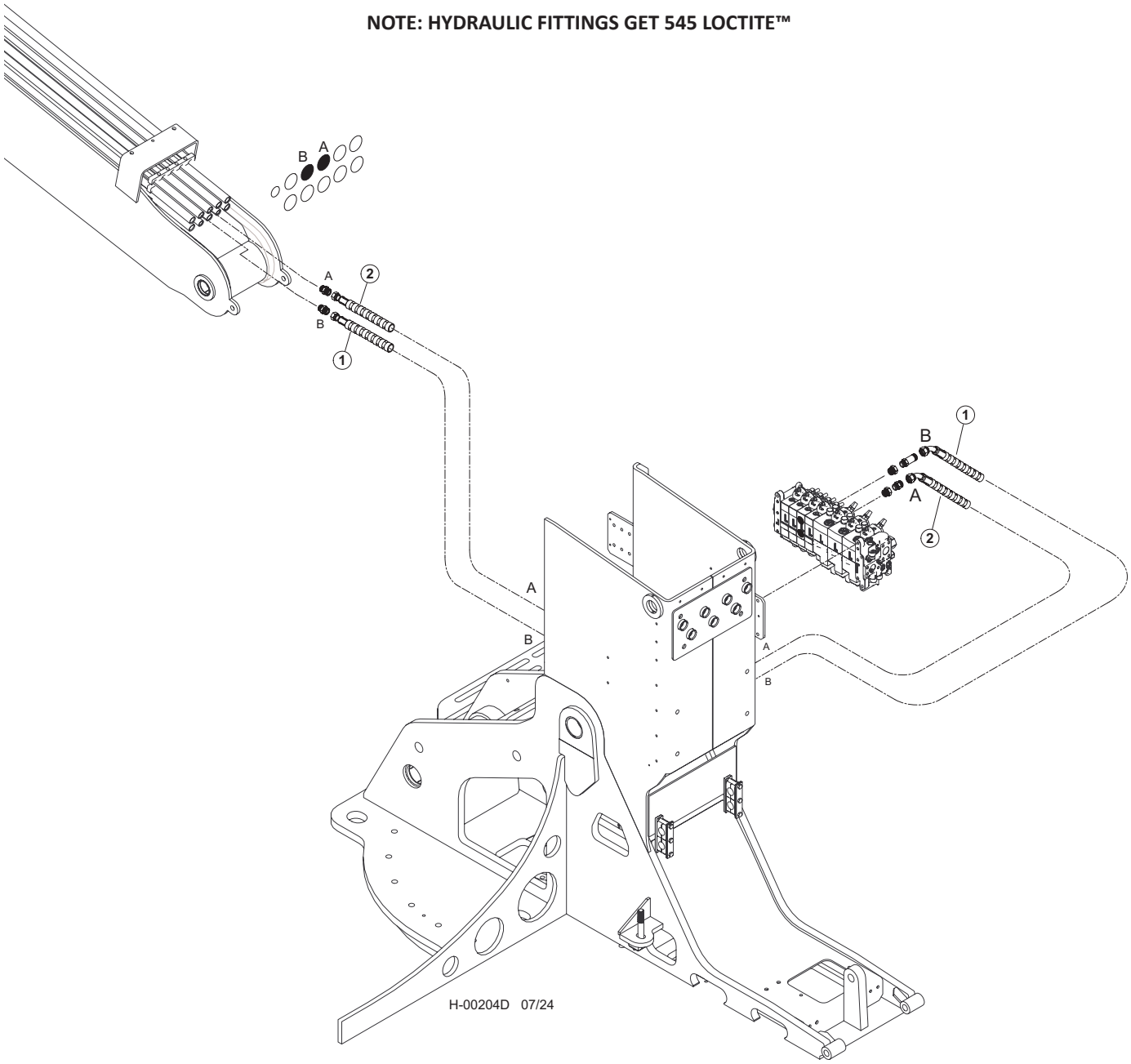

Item	Part #	Description	Qty.
1	66475 - (65990 - KIT)	HOSE, HYD, 722TC69 10-10OS-10O4-W **- (ROTATE "B")**	1
2	66475 - (65990 - KIT)	HOSE, HYD, 722TC69 10-10OS-10O4-W **- (ROTATE "A")**	1

H100-01260 - SQUIRT BOOM PROCESSOR PIPING - CAB LEVEL (K220/L90 VALVE)
MAIN VALVE TO BOOM

NOTE: HYDRAULIC FITTINGS GET 545 LOCTITE™

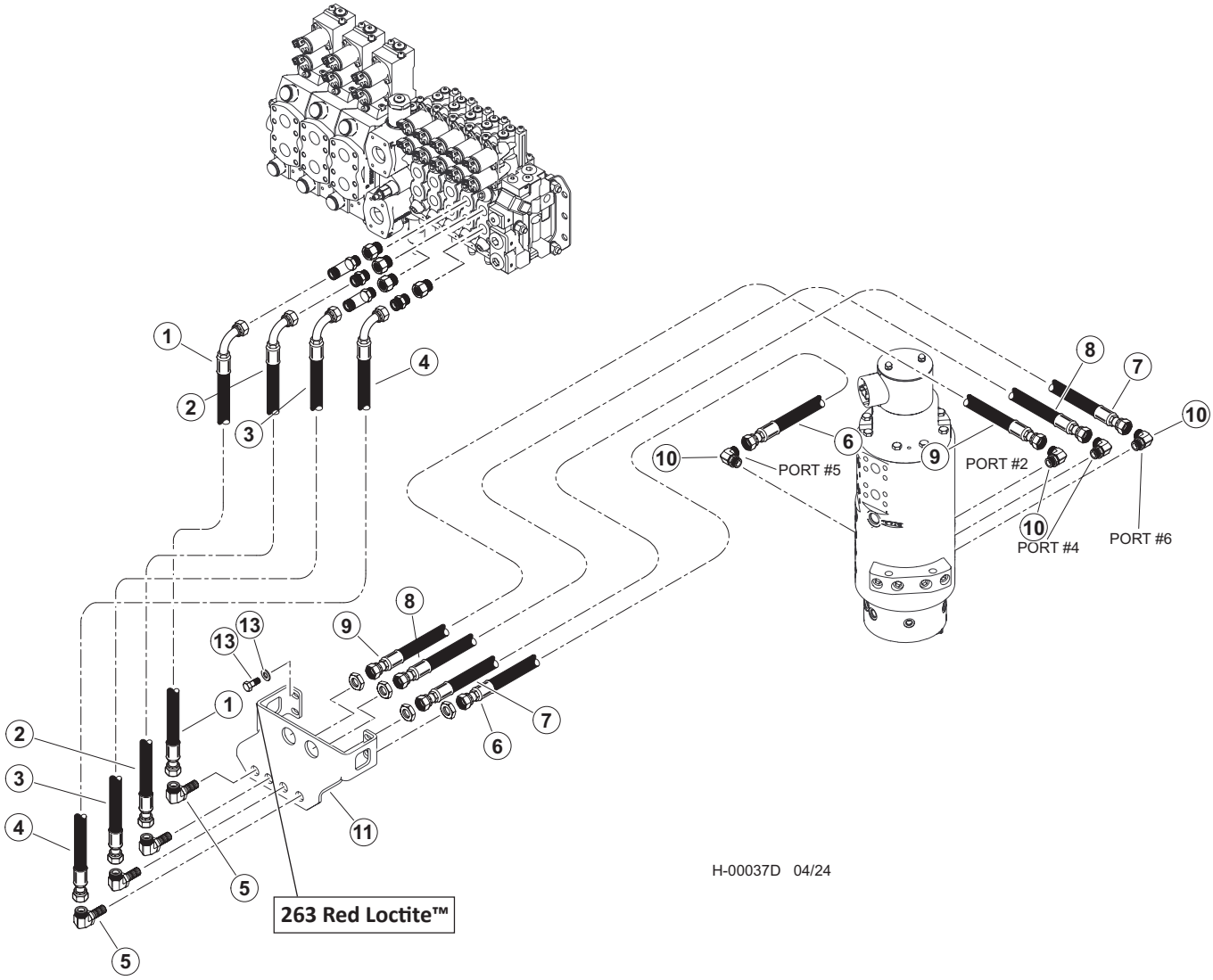

H100-01260 - SQUIRT BOOM PROCESSOR PIPING - CAB LEVEL (K220/L90 VALVE)
MAIN VALVE TO BOOM

Item	Part #	Description	Qty.
1	57945 - (KIT)	HOSE ASSY - 787TC42 08-08OS-0809 - (VALVE PORT “B” TO BULKHEAD)	1
2	57945 - (KIT)	HOSE ASSY - 787TC42 08-08OS-0809 - (VALVE PORT “B” TO BULKHEAD)	1
3	57945 - (KIT)	HOSE ASSY - 787TC39 08-08OS-0809 - (VALVE PORT “A” TO BULKHEAD)	1
4	57945 - (KIT)	HOSE ASSY - 787TC39 08-08OS-0809 - (VALVE PORT “A” TO BULKHEAD)	1
	57947	KIT, FITTING TRACK LEVEL-D SERIES	1
5	24187	ELBOW, 90 BULKHEAD - 855BH-TT-08	4
6	57945 - (KIT)	HOSE ASSY - 787TC30 08-08OS-080S - (BULKHEAD TO PORT #5 ON ROT MAN)	1
7	57945 - (KIT)	HOSE ASSY - 787TC40 08-08OS-080S - (BULKHEAD TO PORT #6 ON ROT MAN)	1
8	57945 - (KIT)	HOSE ASSY - 787TC41.5 08-08OS-080S - (BULKHEAD TO PORT #4 ON ROT MAN)	1
9	57945 - (KIT)	HOSE ASSY - 787TC44 08-08OS-080S - (BULKHEAD TO PORT #2 ON ROT MAN)	1
10	16360	ELBOW, 90 - FF1868T-0808S	4
11	60559	BULHEAD, FRONT - TM	1
12	15542	BOLT - .375” X .75”	2
13	15528	WASHER, SAE FLAT - .375” OR 3/8” **263 RED LOCTITE™**	2

H200-00500 - SQUIRT BOOM PROCESSOR PIPING - CAB LEVEL (W450/W300 VALVE)
MAIN VALVE TO BOOM

NOTE: HYDRAULIC FITTINGS GET 545 LOCTITE™

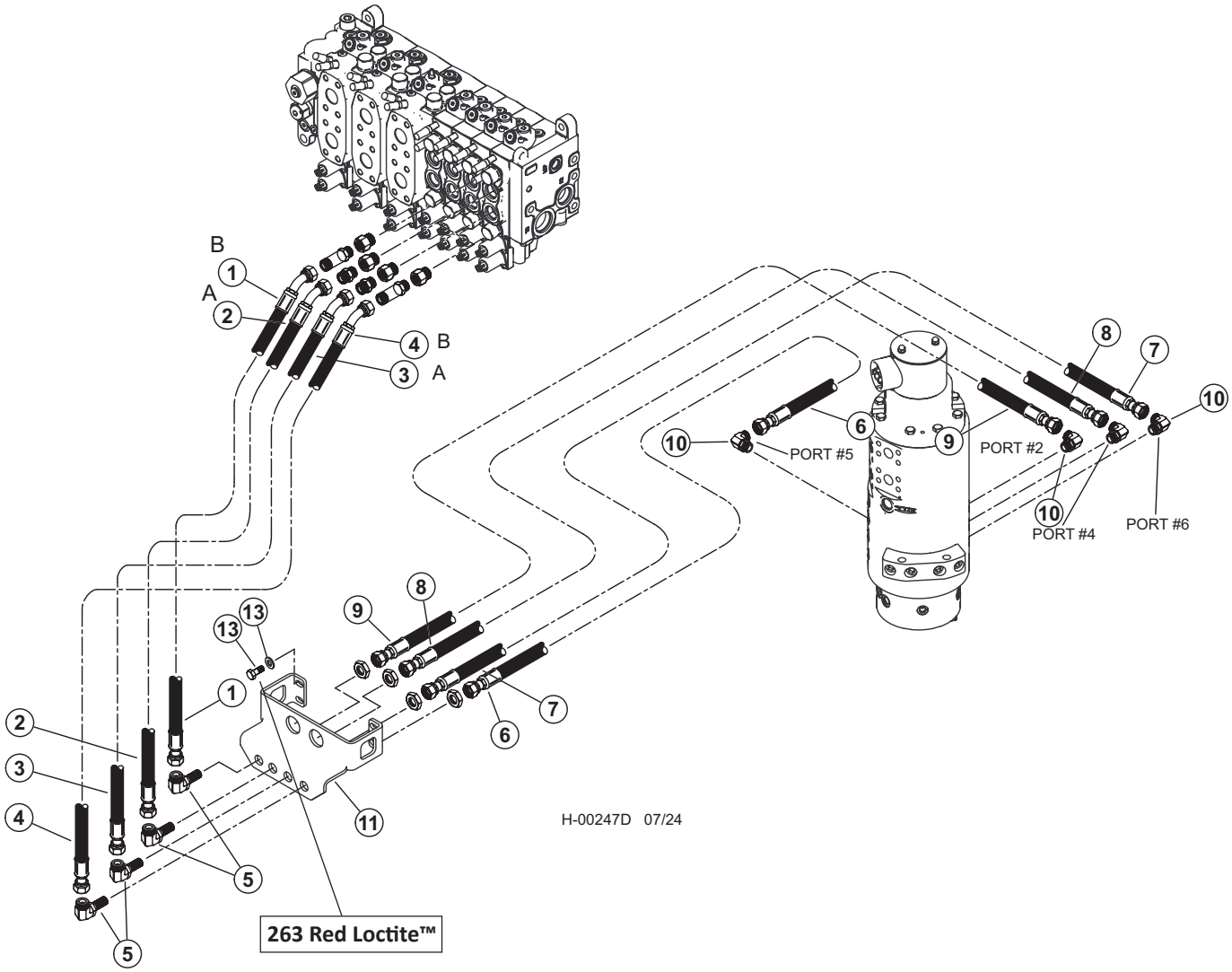

H200-00500 - SQUIRT BOOM PROCESSOR PIPING - CAB LEVEL (W450/W300 VALVE)
MAIN VALVE TO BOOM

Item	Part #	Description	Qty.
1	65460 - (65812 - KIT)	HOSE, HYD, 787TC36 16-16OS-20PH9-SW **- (VALVE PORT "B" TO BULKHEAD)**	1
2	65460 - (65812 - KIT)	HOSE, HYD, 787TC36 16-16OS-20PH9-SW **- (VALVE PORT "B" TO BULKHEAD)**	1
3	65459 - (65812 - KIT)	HOSE, HYD, 787TC32 16-16OS-20PH9-SW **- (VALVE PORT "A" TO BULKHEAD)**	1
4	65620 - (65619 - KIT)	HOSE, HYD, 787TC32 16-16OS-20PH9-SW **- (VALVE PORT "A" TO BULKHEAD)**	1
	57947	KIT, FITTING TRACK LEVEL-D SERIES	1
5	24187	ELBOW, 90 BULKHEAD - 855BH-TT-08	4
6	65892 - (65891 - KIT)	HOSE ASSY - 787TC30 08-08OS-080S **- (BULKHEAD TO PORT #5 ON ROT MAN)**	1
7	65952 - (65891 - KIT)	HOSE ASSY - 787TC40 08-08OS-080S **- (BULKHEAD TO PORT #6 ON ROT MAN)**	1
8	65894 - (65891 - KIT)	HOSE ASSY - 787TC41.5 08-08OS-080S **- (BULKHEAD TO PORT #4 ON ROT MAN)**	1
9	65895 - (65891 - KIT)	HOSE ASSY - 787TC44 08-08OS-080S **- (BULKHEAD TO PORT #2 ON ROT MAN)**	1
10	16360	ELBOW, 90 - FF1868T-0808S	4
11	60559	BULHEAD, FRONT - TM	1
12	15542	BOLT - .375" X .75"	2
13	15528	WASHER, SAE FLAT - .375" OR 3/8" **263 RED LOCTITE™**	2

H100-01270 - SQUIRT BOOM PROCESSOR PIPING - LIGHT WIRE (MAIN BOOM TO STICK BOOM)

NOTE: HYDRAULIC FITTINGS GET 545 LOCTITE™

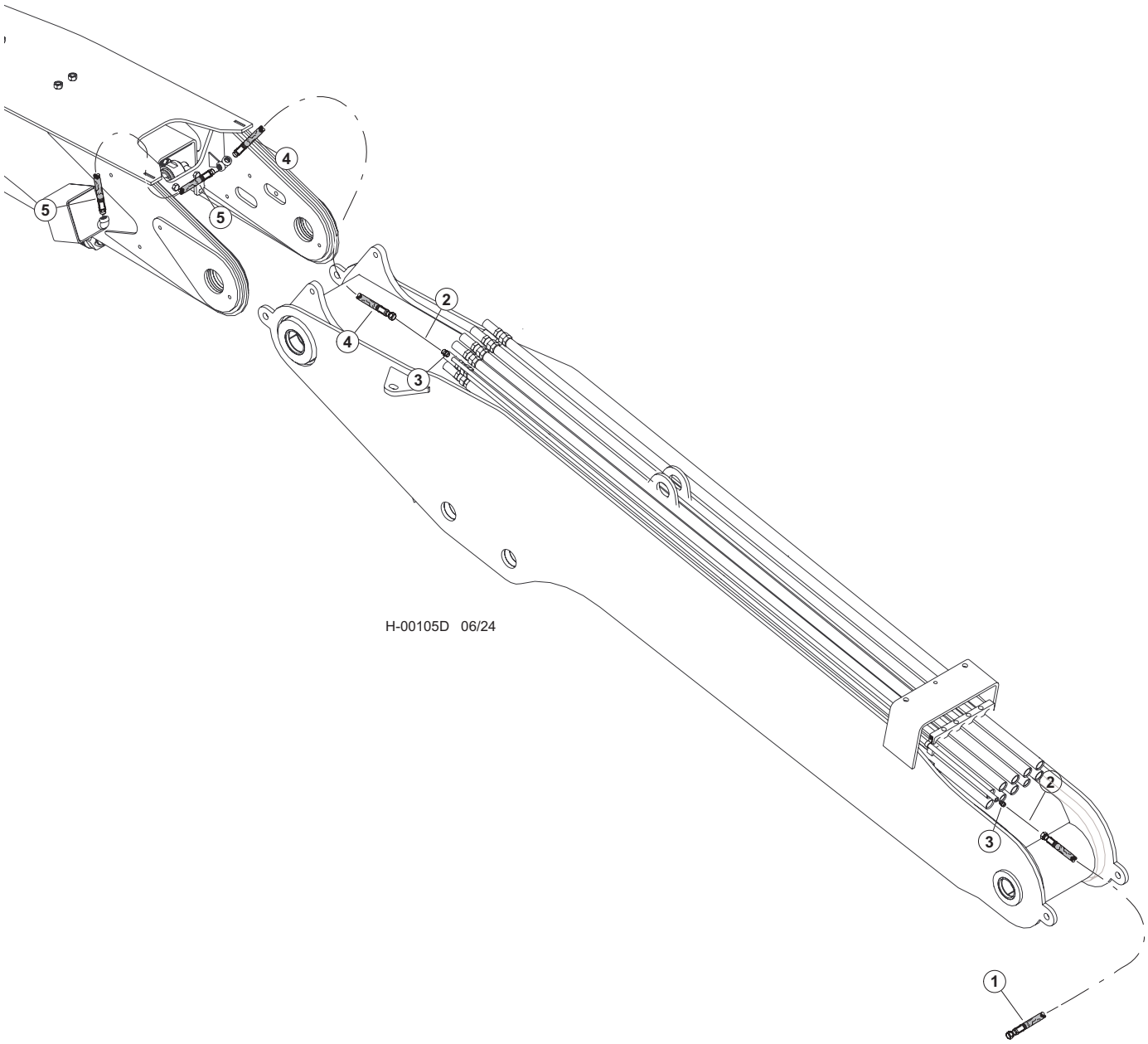

Item	Part #	Description	Qty.
1	665150	HOSE, HYD, 387TC64 06-06OS-08PS-SW - **LIGHT WIRE - BASE OF MAIN BOOM)**	1
2	HG12051	LIGHT WIRE	AR
3	51878	CONNECTOR, STR - MALE PIPE (6-6 FLO-S)	2
4	665150 - (665080 - KIT)	HOSE, HYD, 387TC64 06-06OS-08PS-SW - **(MAIN BOOM TO SQUIRT BOOM)**	1
5	665180 - (665090 - KIT)	HOSE, HYD, 387TC34 08-08MP-08PS-W - **(LIGHT JUMPER HOSE)**	1

H100-01280 - SQUIRT BOOM PROCESSOR PIPING - STICK BOOM (MAIN BOOM TO STICK CYLINDER)

NOTE: HYDRAULIC FITTINGS GET 545 LOCTITE™

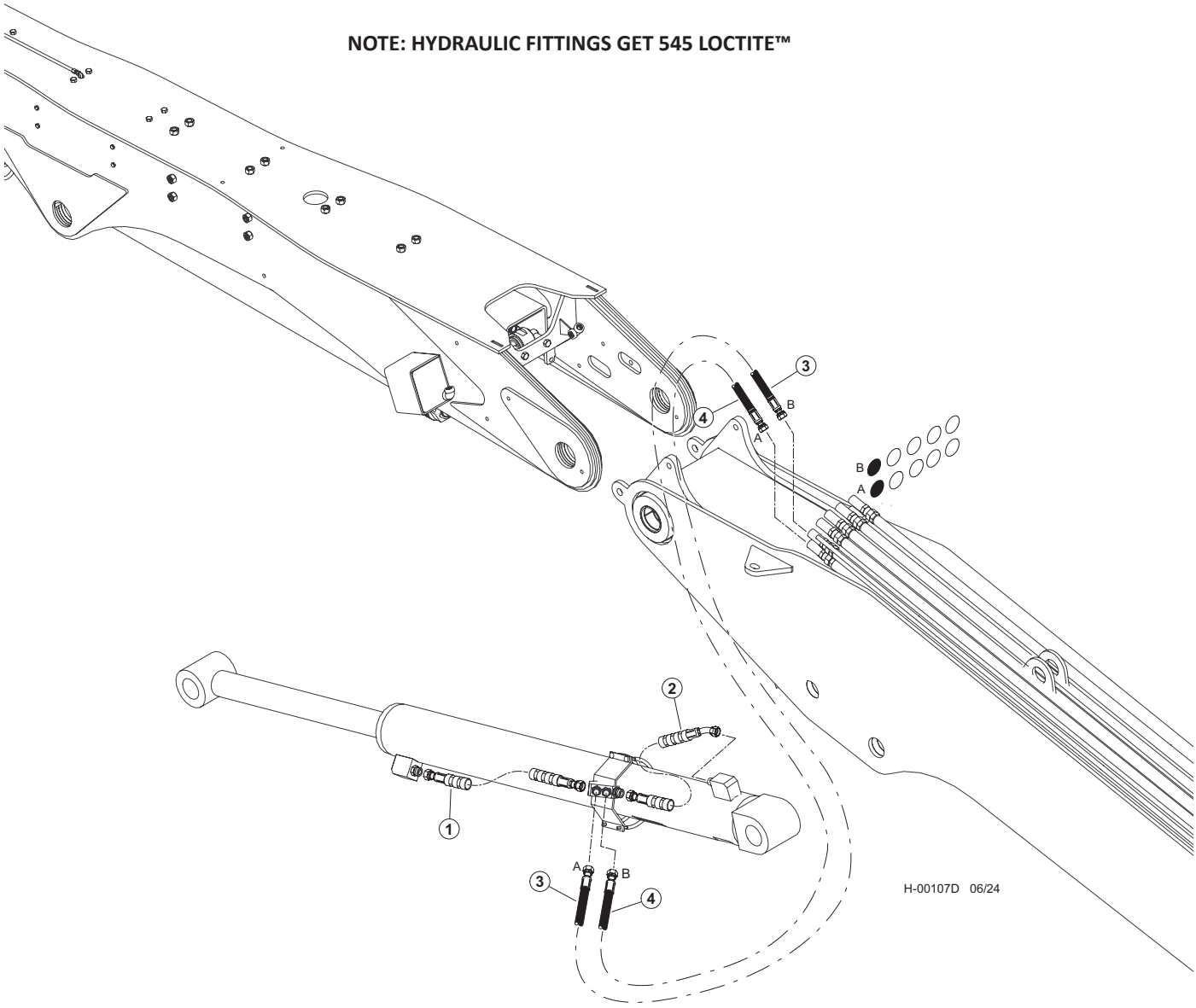

Item	Part #	Description	Qty.
1	65855	HOSE ASSY - 722TC38 16-16OS-16OS-SW - **(STICK CYLINDER ROD - "A")**	1
2	65853	HOSE ASSY - 722TC17 16-16OS-16O4-SW - **(STICK CYLINDER BASE - "B")**	1
3	65848 - (665080 - KIT)	HOSE, HYD, 787TC79 16-16OS-16OS - **(STICK CYLINDER ROD - "A")**	1
4	65849 - (665080 - KIT)	HOSE, HYD, 787TC81 16-16OS-16OS - **(STICK CYLINDER BASE - "B")**	1

H100-01290 - SQUIRT BOOM PROCESSOR PIPING - BOOM SQUIRT (MAIN BOOM TO CYLINDER)

NOTE: HYDRAULIC FITTINGS GET 545 LOCTITE™

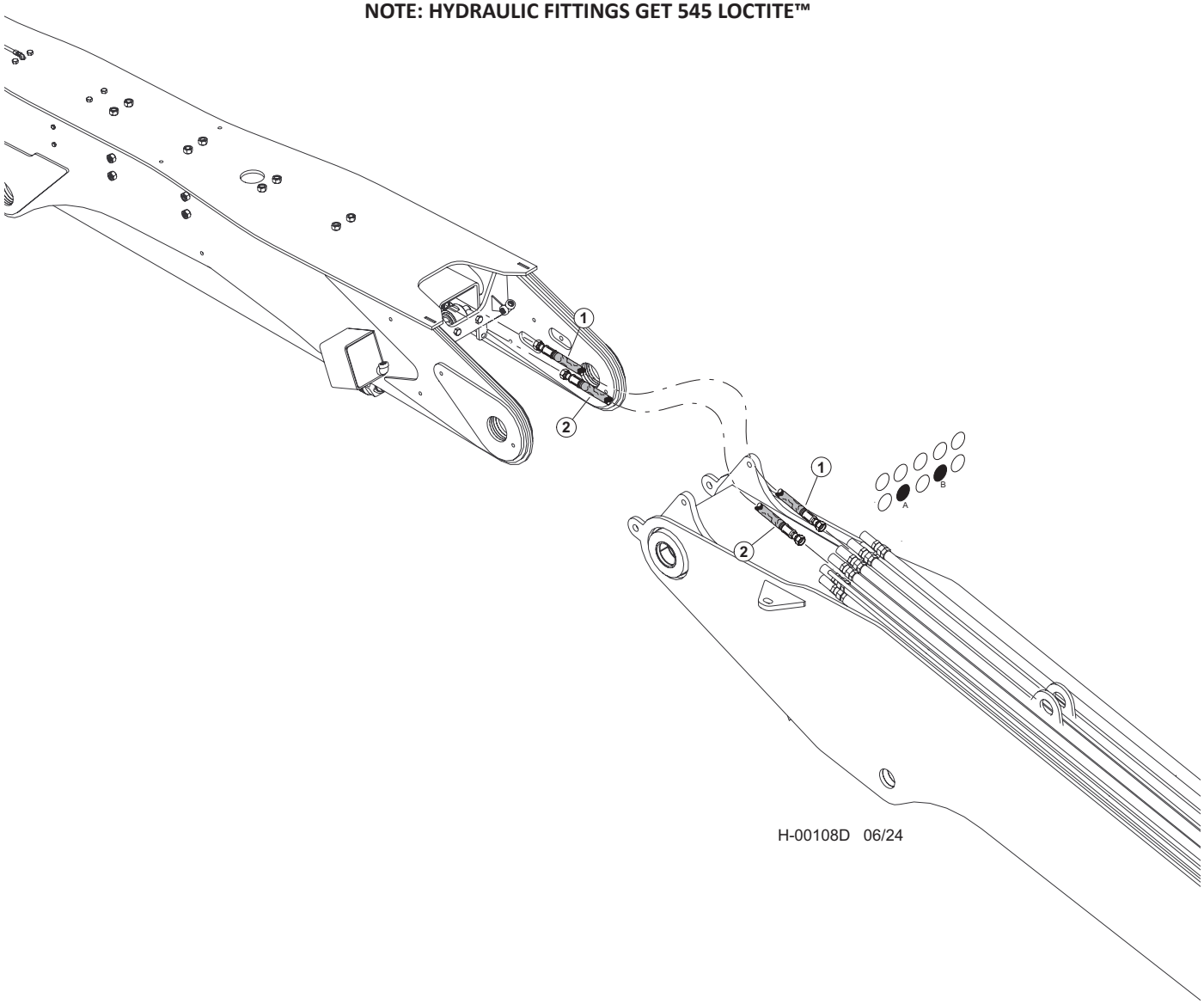

Item	Part #	Description	Qty.
1	665080 - 55675 - KIT)	HOSE, HYD, 722TC59 16-16OS-16OS-W **- (SQUIRT CYLINDER "A")**	1
2	665140 - 55675 - KIT)	HOSE, HYD, 722TC60 16-16OS-16OS-W **- (SQUIRT CYLINDER "B")**	1

H100-01300 - SQUIRT BOOM PROCESSOR PIPING - ROTATE (MAIN BOOM TO STICK BOOM)

NOTE: HYDRAULIC FITTINGS GET 545 LOCTITE™

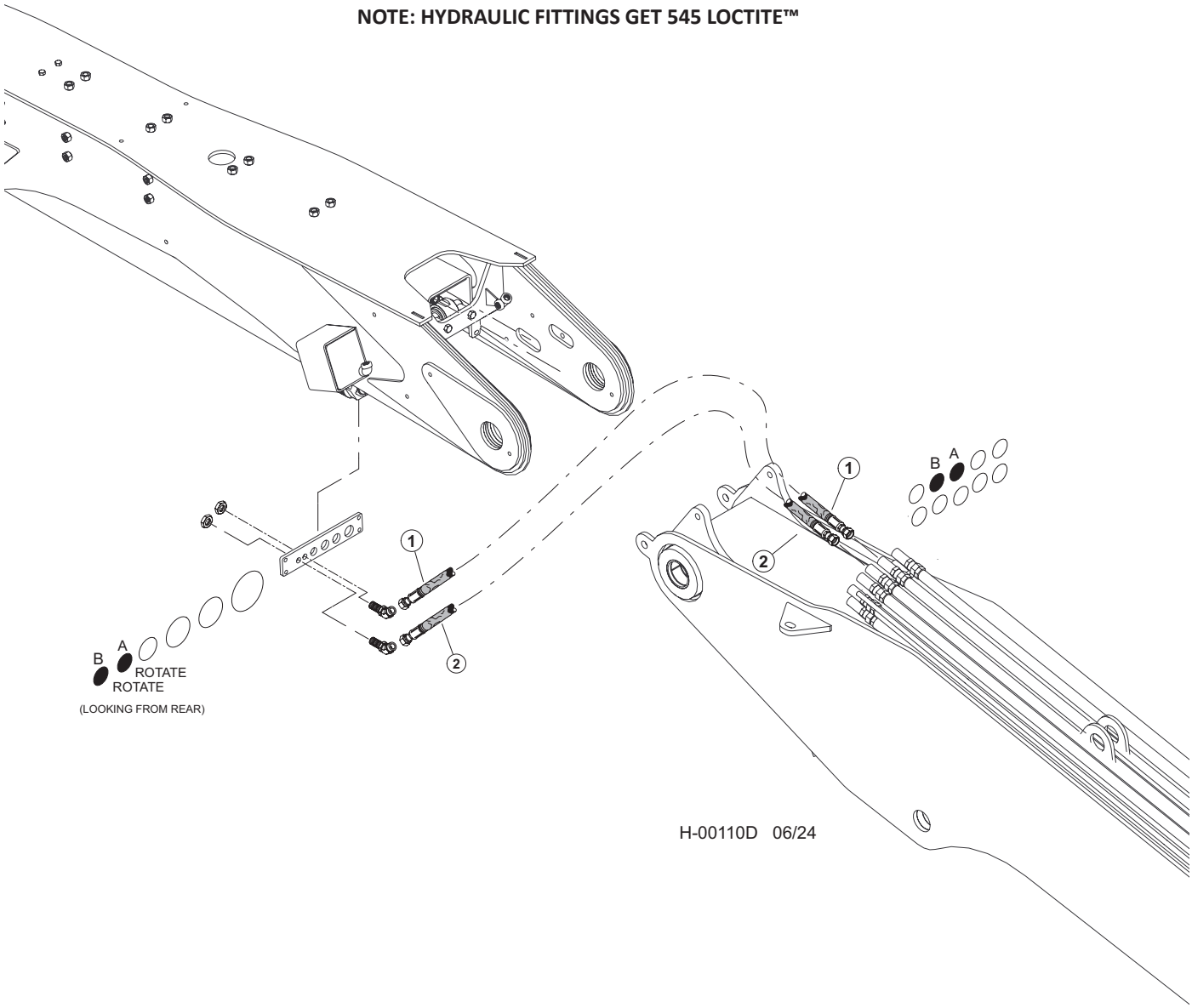

Item	Part #	Description	Qty.
1	665110 - (665080 - KIT)	HOSE, HYD, 722TC67 10-10OS-10OS-W **- (ROTATE "A")**	1
2	665110 - (665080 - KIT)	HOSE, HYD, 722TC67 10-10OS-10OS-W **- (ROTATE "B")**	1

H100-01310 - SQUIRT BOOM PROCESSOR PIPING - PRESSURE & RETURN (MAIN BOOM TO STICK BOOM)

NOTE: HYDRAULIC FITTINGS GET 545 LOCTITE™

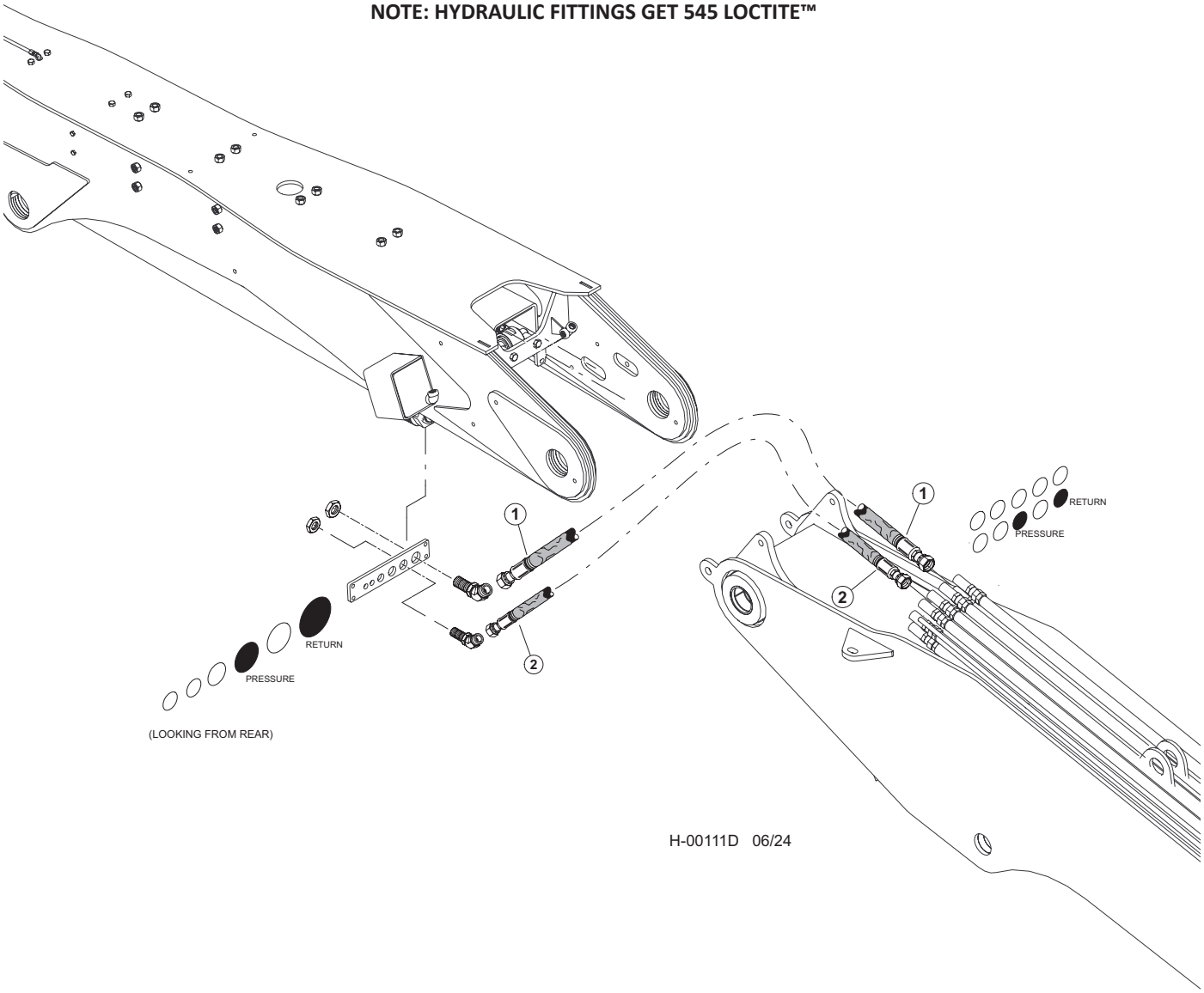

Item	Part #	Description	Qty.
1	665170 - (665080 - KIT)	HOSE, HYD, 722TC64 20-20OS-20OS-W **- (RETURN)**	1
2	665100 - (665080 - KIT)	HOSE, HYD, 787TC64 16-16OS-16OS-W **- (PRESSURE)**	1

H100-01320 - SQUIRT BOOM PROCESSOR PIPING - CASE DRAIN & ATTACHMENT ELEC. (MAIN BOOM TO STICK BOOM)

NOTE: HYDRAULIC FITTINGS GET 545 LOCTITE™

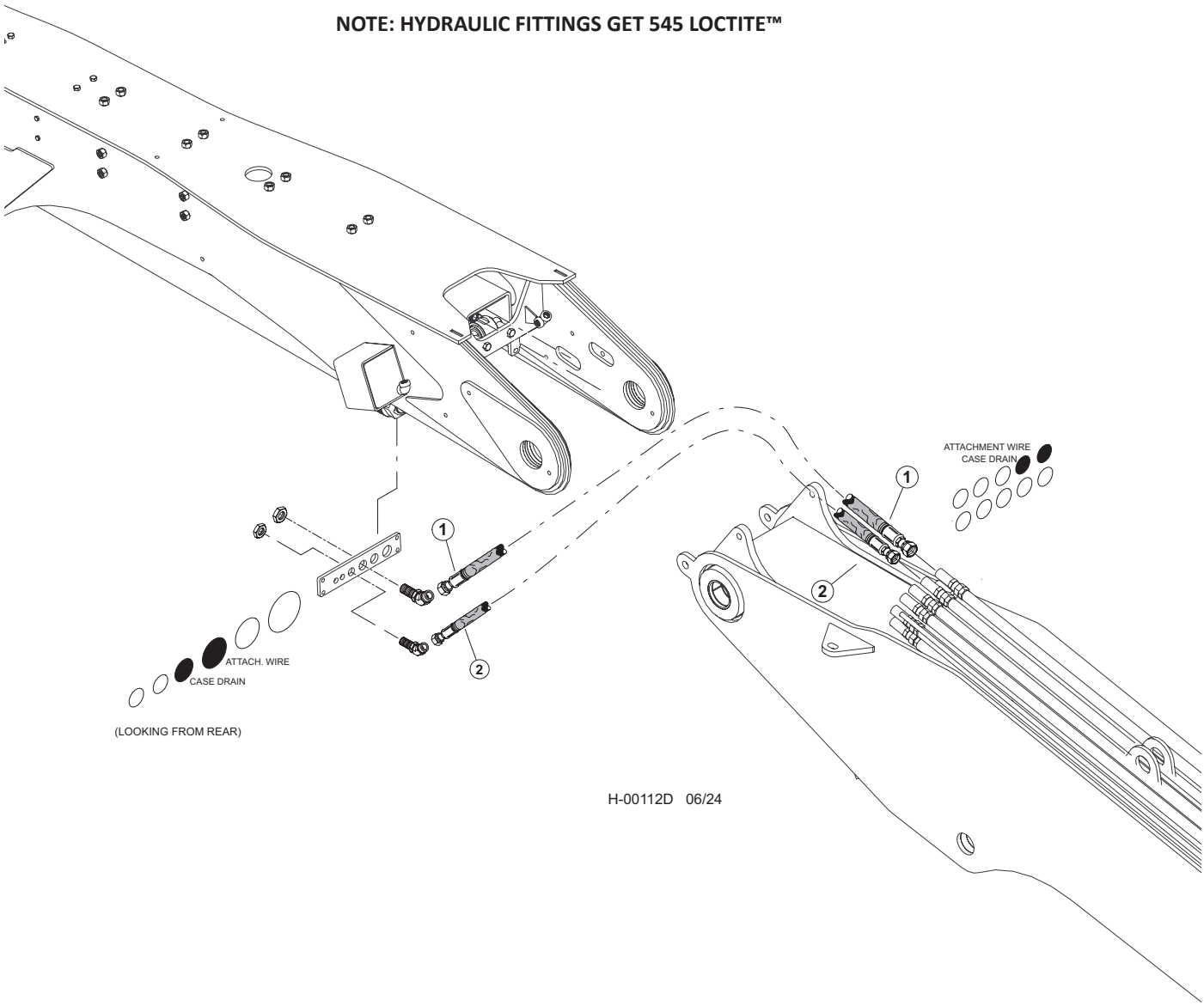

Item	Part #	Description	Qty.
1	665160 - (665080 - KIT)	HOSE, HYD, 387TC65 16-16OS-16OS-W - **(ATTACHMENT WIRE)**	1
2	665120 - (665080 - KIT)	HOSE, HYD, 722TC67 12-12OS-12OS-W - **(CASE DRAIN)**	1

H100-01330 - SQUIRT BOOM PROCESSOR PIPING - GREASE HOSES (MAIN BOOM TO STICK BOOM

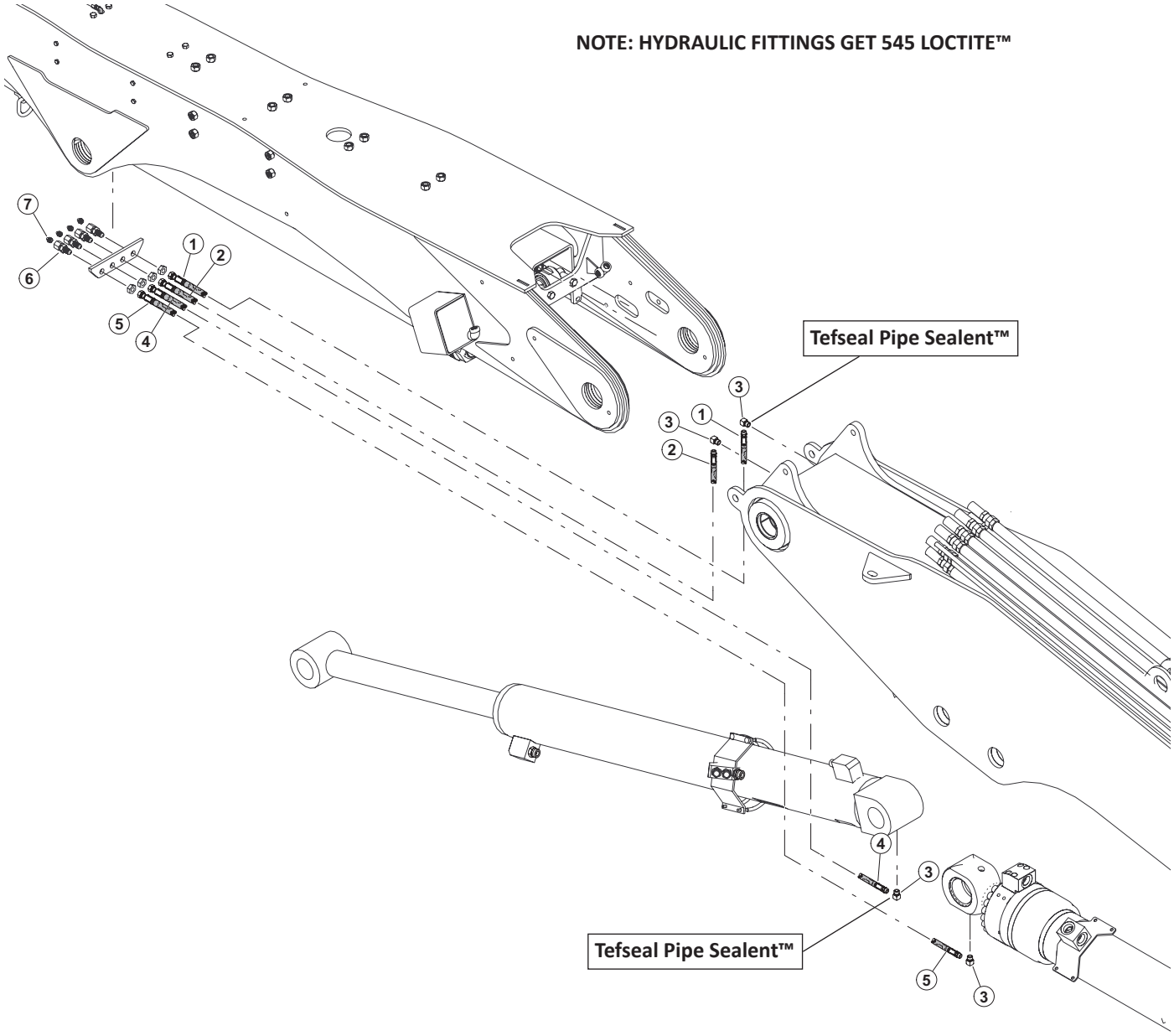

H-00113D 06/24

Item	Part #	Description	Qty.
1	665240 - (665090 - KIT)	HOSE, HYD, HLBD76-02-02PS-04JS-WS100 **- (MAIN BOOM TO BULKHEAD)**	1
2	665240 - (665090 - KIT)	HOSE, HYD, HLBD76-02-02PS-04JS **- (MAIN BOOM TO BULKHEAD)**	1
3	22281	ELBOW, 1/8-27 NPTF(M), 1/8-17 NPTF(F),90 **TEFSEAL PIPE SEALENT™**	4
4	665260 - (665090 - KIT)	HOSE, HYD, HLBD128-02-02PS-04JS-WS100 **- (STICK CYL. BASE TO BULKHEAD)**	1
5	665270 - (665090 - KIT)	HOSE, HYD, HLBD136-02-02PS-04JS **- (MAIN CYL. ROD TO BULKHEAD)**	1
6	15658	CONNECTOR, STR BULKHEAD - 2239-2-4S	4
7	10704	FITTING, GREASE - .125 NPT - STR	4

H100-01340 - IMPLEMENT PUMP - 145CC

NOTE: APPLY GREASE TO O-RINGS

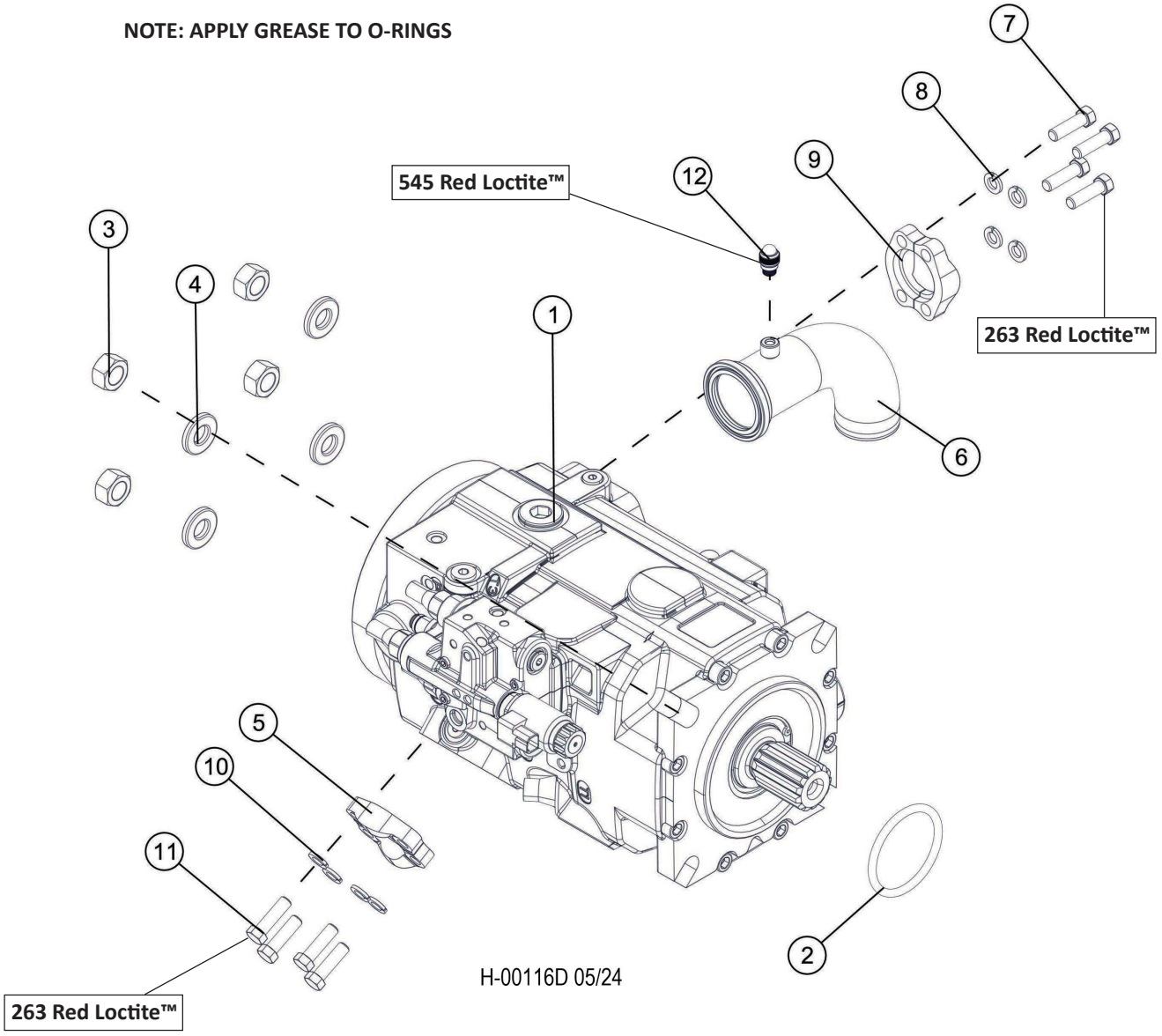

Item	Part #	Description	Qty.
1	57661	PUMP, IMPLEMENT - REX 145CC/40	1
2	15442-2	O-RING, PUMP DRIVE PILOT - DRIVE	1
3	10776	NUT, HEX - .75”	4
4	15550	WASHER, SAE FLAT - .75”	4
5	15114	KIT, SPLIT FLANGE - 1.25” (CODE 62)	1
6	46265	TUBE, SUCTION - IMP PUMP / C SERIES	1
7	58378	BOLT - 5/8-11 X 1 3/4” HEX HEAD **263 RED LOCTITE™**	4
8	10771	WASHER, SAE FLAT - .625”	4
9	22639	KIT, SPLIT FLANGE - 3” (CODE 61)(METRIC)	1
10	10710	WASHER, LOCK - .5”	4
11	10736	BOLT - .5” X 2” **263 RED LOCTITE™**	4
12	57820	TAP, GAUGE PORT # 6 SAE - ORING-BOSS **545 RED LOCTITE™**	1

H100-01350 - IMPLEMENT PUMP - 145CC

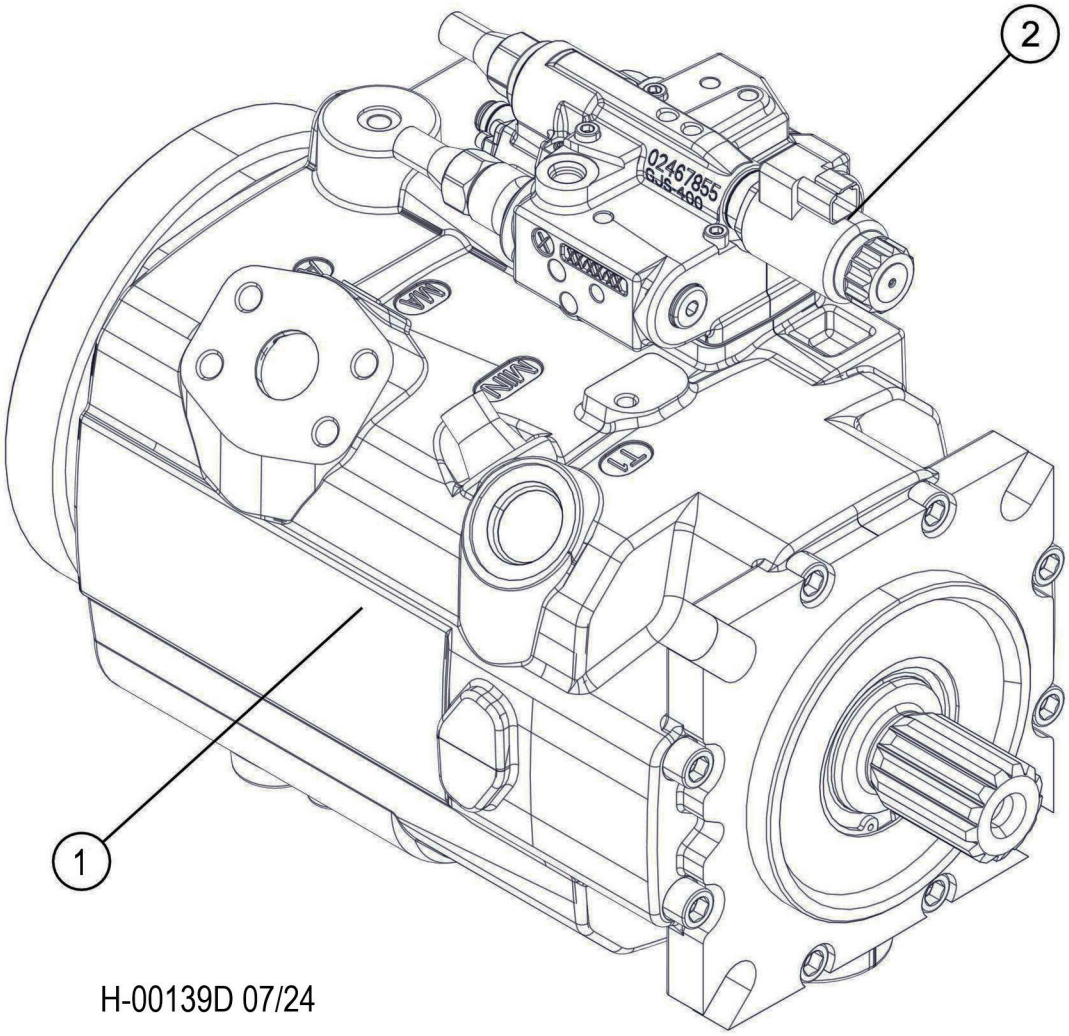

Item	Part #	Description	Qty.
1	57661	PUMP, IMPLEMENT - REX 145CC/40	1
2	53730	SOLENOID COIL	1
*	58256	O-RING TO SEAL AUX. PUMP - GREEN HIGH TEMP	1
*	58292	DRIVE, THRU - 125cc HYRDO BRUSH PUMP - D	1
*	R909152493	GREEN O-RING	1
*	R902569653	SEAL KIT	

***MEANS NOT SHOWN**

H100-01351 - IMPLEMENT PUMP - 145CC

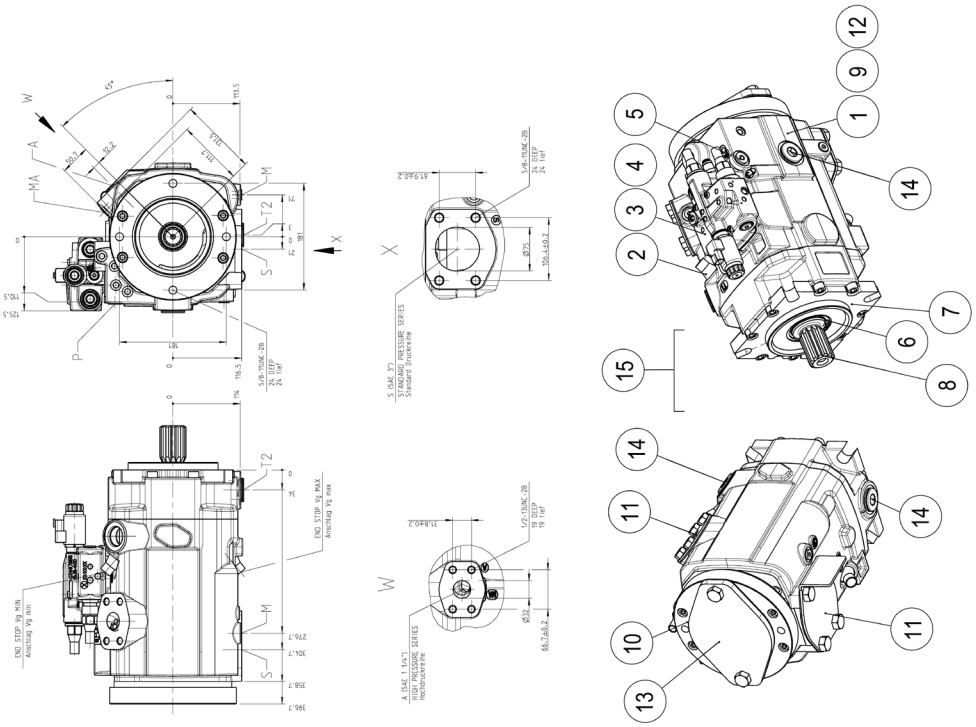

PORTS MARKED Anschlüsse gekennzeichnet	DESCRIPTIONS OF PORTS Bezeichnung der Anschlüsse			
A	PRESSURE PORT Druckanschluss	(SAE 1 1/4 ")	(OPEN, MUST BE CONNECTED) (offen, muss angeschlossen werden)	
S	SUCTION PORT Sauganschluss	(SAE 3 ")	(OPEN, MUST BE CONNECTED) (offen, muss angeschlossen werden)	
T1,T2,T3	AIR BLEED, CASE DRAIN Entlüftung, Gehäuse	ISO 11926	(1 5/16 UN-2B) DEEP 20 THF	(DEPENDING ON THE MOUNTING POSITION ONE OF THE PORTS T1, T2 OR T3 HAVE TO BE CONNECTED TO CASE DRAIN) (Anbringung von der Einbaulage muss einer der Anschlüsse T1, T2 oder T3 angeschlossen werden, siehe Zeichnung)
M	MEASURING PORT CONTROL PRESSURE Messanschluss Steuerdruck	ISO 11926	(9/16-18UNF-2B) PLUGGED 13 DEEP (verschlossen)	
MA	MEASURING PORT OPERATING PRESSURE Messanschluss Betriebsdruck	ISO 11926	(9/16-18UNF-2B) PLUGGED 13 DEEP (verschlossen)	
P	MAINSHAFT FUNCTION Hauptwelle Funktion	ISO 11926	(3/4-16UNF-2B) PLUGGED 12,6 DEEP (verschlossen)	
X	PILOT SIGNAL LOAD-SENSING Steuerdruck Load-Sensing	ISO 11926	(9/16-18UNF-2B) (OPEN, MUST BE CONNECTED 13 DEEP (offen, muss angeschlossen werden)	

H-00216D 07/24

H100-01351 - IMPLEMENT PUMP - 145CC

Item	Part #	Description	Qty.
1	R902579633	HOUSING	1
2	R902578803	CONTROL	1
3	R902543515	CONTROL VALVE	1
4	R902559826	RETURN GUIDE	1
5	R902511576	FILTER ELEMENT	1
6	58286	SEAL, SHAFT - REXTOTH 145CC	1
7	R902579676	BEARING FLANGE	1
8	65144	DRIVE SHAFT	1
9	R902563624	ROTARY GROUP	1
10	R902553159	BELL HOUSING	1
11	R902581237	FLANGE COVER	1
12	R902531102	WHEEL	1
13	R902602980	FLANGE COVER	1
14	R902601857	SCREW PLUG	3
15	R902569652	SEAL KIT	1

H100-01352 - IMPLEMENT PUMP - 145CC

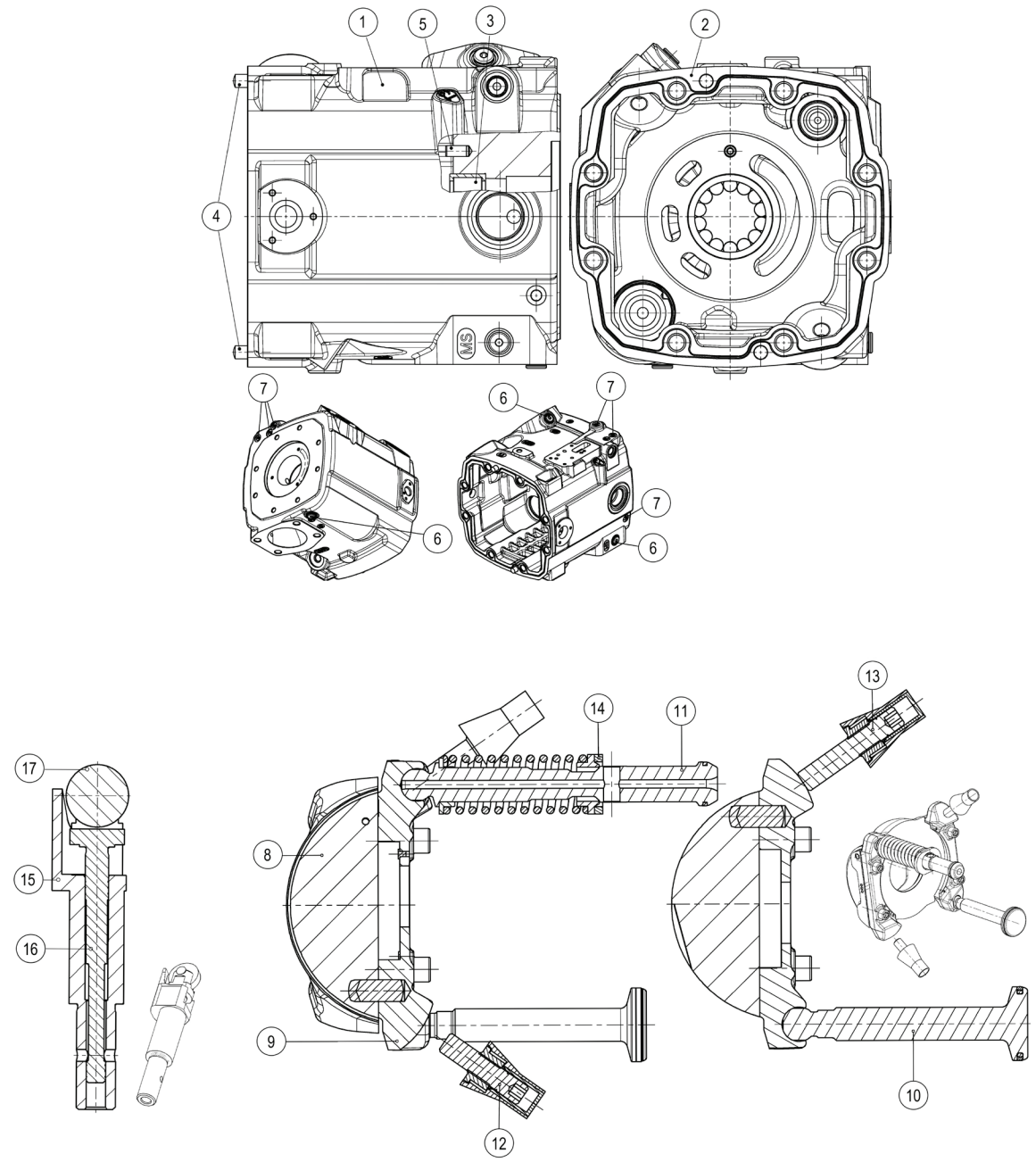

H-00221D 04/24

H100-01352 - IMPLEMENT PUMP - 145CC

Item	Part #	Description	Qty.
1	R902563818	HOUSING	1
2	R902483936	FLAT GASKET	1
3	R902581718	CYL. ROLLER BEARING	1
4	910185906	STRAIGHT PIN	2
5	R913000824	STRAIGHT PIN	1
6	R909157039	SCREW PLUG	3
7	R909831319	DOUBLE BREAK-OFF PLUG	5
8	R902574119	SWASH PLATE	1
9	R902577533	SEGMENT	1
10	R902576786	POSITIONING PISTON	1
11	R902576785	OPPOSED PISTON	1
12	R902579265	SETSCREW	1
13	R902579266	SETSCREW	1
14	R902484554	CENTERING TAB	1
15	R902554925	ADJUSTING BUSH	1
16	R902469966	MEASURING PISTON	1
17	R902464359	IDLE ROLLER	1

H100-01353 - IMPLEMENT PUMP - 145CC

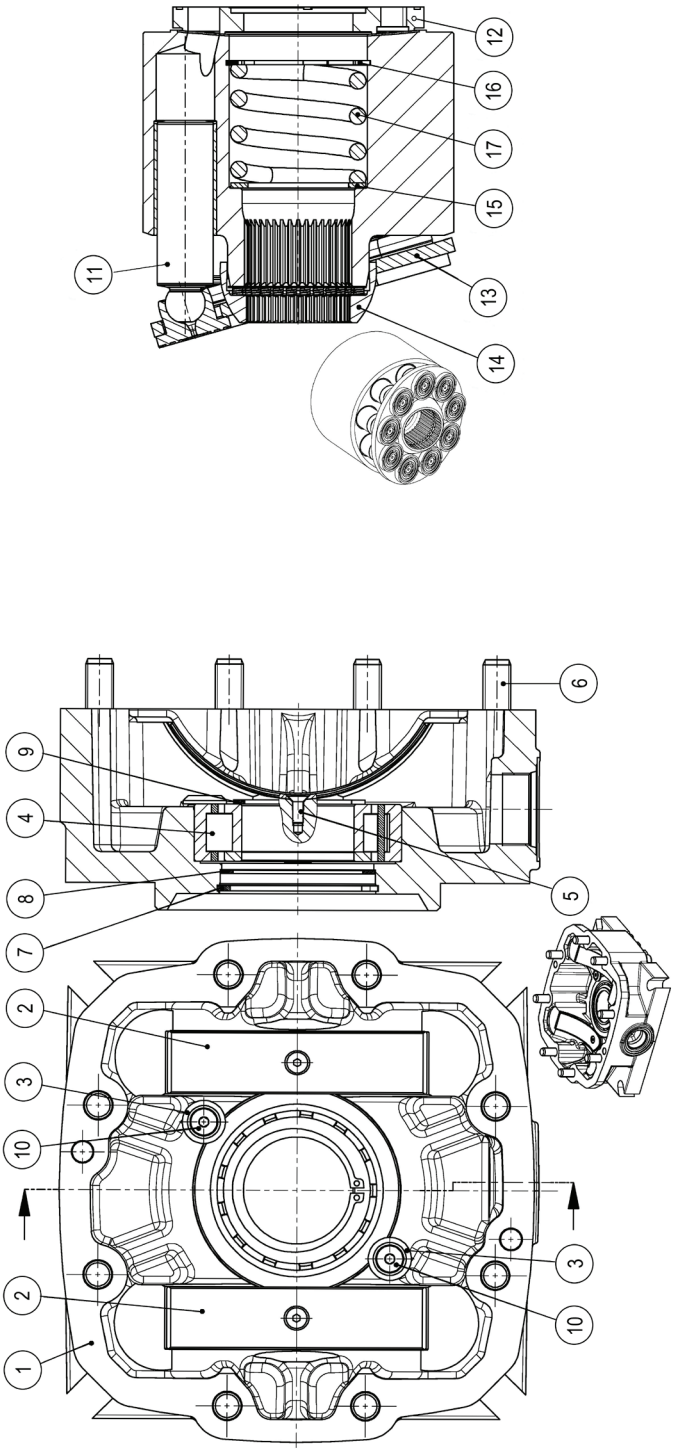

H-00222D 07/24

H100-01353 - IMPLEMENT PUMP - 145CC

Item	Part #	Description	Qty.
1	R902559950	BEARING FLANGE	1
2	R902557158	BEARING SHELL	2
3	R913052738	PLAIN WASHER	2
4	R902572600	CYL. ROLLER BEARING	1
5	R902571999	COUNTERSUNK-HEAD SCREW	2
6	R902578917	SOCKET HEAD CAP SCREW	8
7	R910116025	RETAINING RING	1
8	R902400750	SHIM RING	1
9	R910105848	RETAINING RING	1
10	R902572000	COUNTERSUNK-HEAD SCREW	2
11	R902548828	PISTON PAD	9
12	R902568645	CYLINDER SET	1
13	R902516020	RETAINING PLATE	1
14	R902561892	RETAINING BALL	1
15	R902482942	WASHER	1
16	R913008468	RETAINING RING	1
17	R902482941	COMPRESSION SPRING	1
	BELL HOUSING		
*	R902549512	FLANGE	1
*	R902511031	SPLINED COUPLING	1
*	R902650303	O-RING	1
*	R909086635	O-RING	1
*	R910109622	SOCKET HEAD CAP SCREW	4
	WHEEL		
*	R902492387	WHEEL	1
*	R909083360	RETAINING RING	2

***MEANS NOT SHOWN**

H100-01360 - IMPLEMENT PUMP - 175CC

NOTE: APPLY GREASE TO O-RINGS

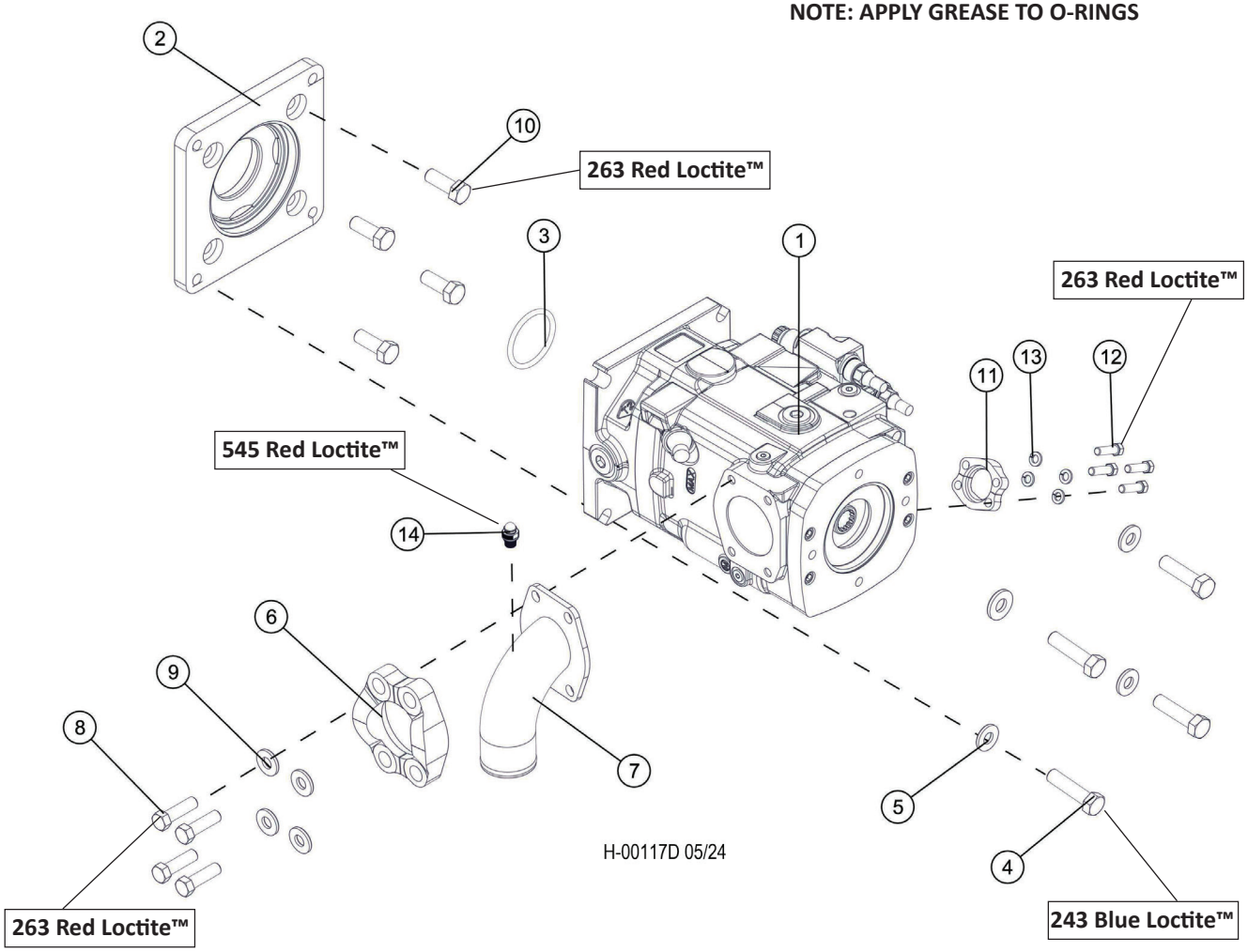

Item	Part #	Description	Qty.
1	57865	PUMP, IMPLEMENT - REX 175CC/40	1
2	57898	PAD, PUMP DRIVE BOX - REXROTH 175CC IMP	1
3	15442-2	O-RING, PUMP DRIVE PILOT - DRIVE	1
4	15549	BOLT - .75” X 2.0 **243 BLUE LOCTITE™**	4
5	15550	WASHER, SAE FLAT - .75”	4
6	58139	FLANGE, 13001H-5656K 175CC PUMP 57865	1
7	57880	TUBE, SUCTION SERIES 40 175cc PUMP	1
8	58378	BOLT - 5/8-11 X 1 3/4” HEX HEAD **263 RED LOCTITE™**	4
9	10771	WASHER, SAE FLAT - .625”	4
10	15502	BOLT - .625” X 1.5” **263 RED LOCTITE™**	4
11	15114	KIT, SPLIT FLANGE - 1.25” (CODE 62)	1
12	10736	BOLT - .5” X 2” **263 RED LOCTITE™**	4
13	10710	WASHER, LOCK - .5”	4
14	57820	TAP, GAUGE PORT # 6 SAE - Oring Boss **545 RED LOCTITE™**	1

H100-01361 - IMPLEMENT PUMP - 175CC

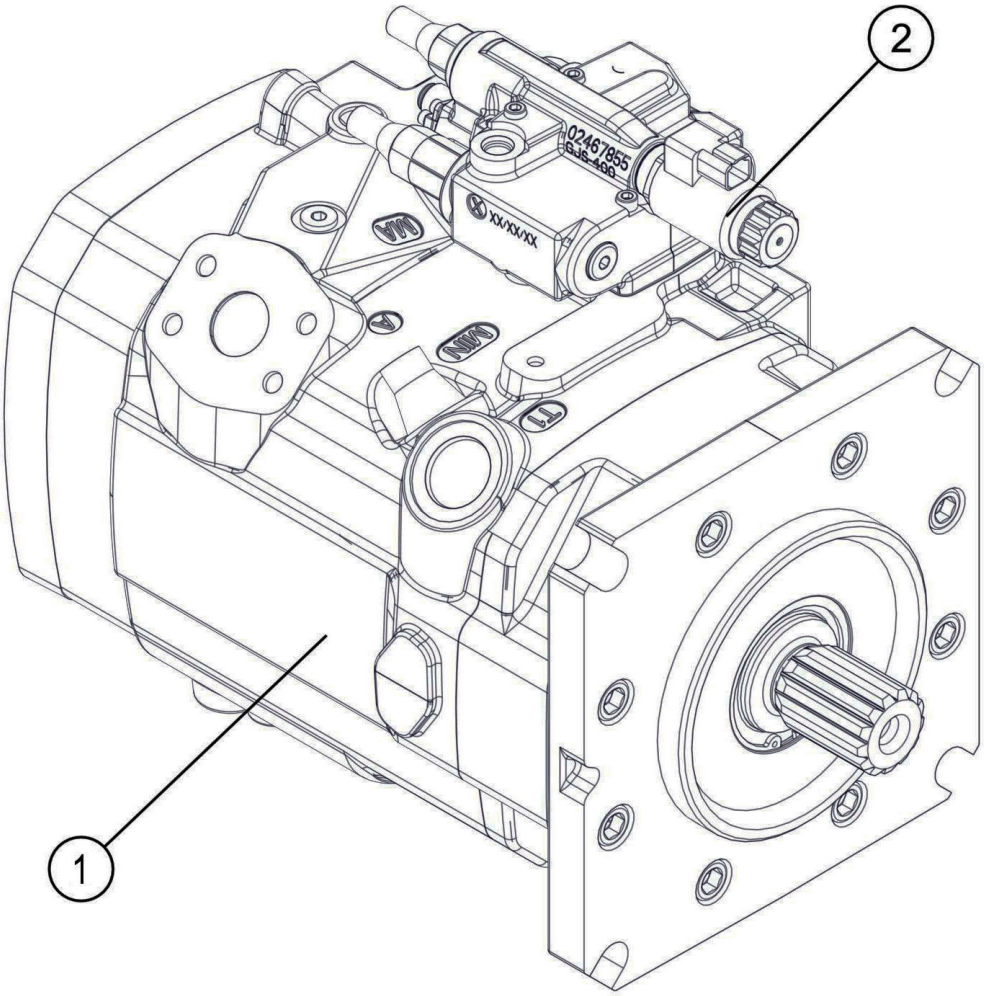

H-00140D 07/24

Item	Part #	Description	Qty.
1	57865	PUMP, IMPLEMENT - REX 175CC/40 W/HP CONT	1
2	53730	SOLENOID COIL	1
*	58256	O-RING TO SEAL AUX. PUMP - GREEN HIGH TEMP	1
*	R902546266	THRU-DRIVE 175cc to 125cc WHEEL PUMP	1
*	R902569652	SEAL KIT	1

*MEANS NOT SHOWN

H100-01363 - IMPLEMENT PUMP - 175CC

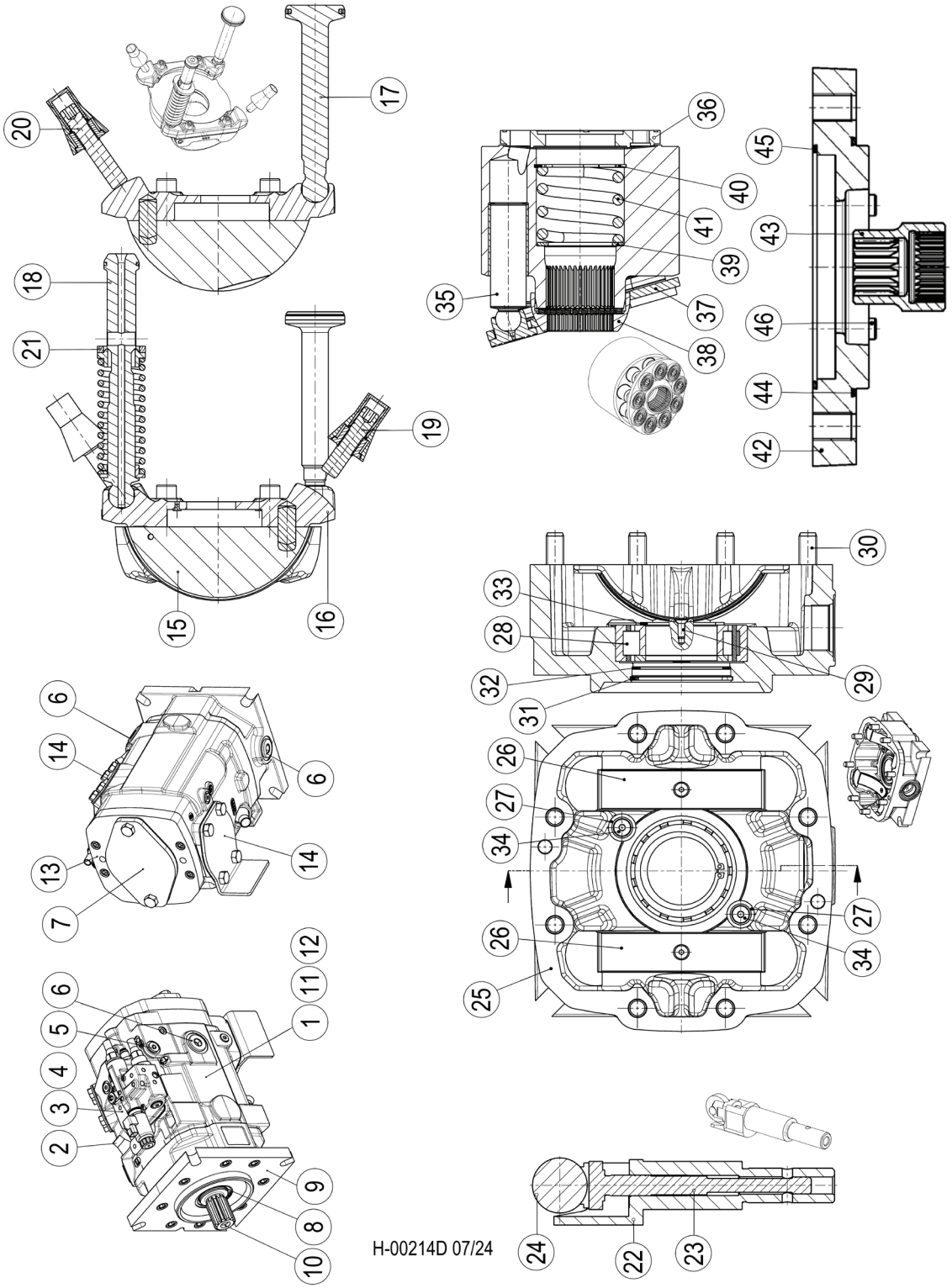

H100-01363 - IMPLEMENT PUMP - 175CC

Item	Part #	Description	Qty.
1	R902579633	HOUSING	1
2	R902578803	CONTROL	1
3	R902543515	CONTROL VALVE	1
4	R902559826	RETURN GUIDE	1
5	R902511576	FILTER ELEMENT	1
6	R902601857	SCREW PLUG	3
7	R902602980	FLANGE COVER	1
8	58286	SHAFT SEALING RING	1
9	R902579676	BEARING FLANGE	1
10	65144	DRIVE SHAFT	1
11	R902563624	ROTARY GROUP	1
12	R902531102	WHEEL	1
13	R902553159	BELL HOUSING	1
14	R902581237	FLANGE COVER	1
15	R902574131	SWASH PLATE	1
16	R902579289	SEGMENT	1
17	R902576790	POSITIONING PISTON	1
18	R902576789	OPPOSED PISTON	1
19	R902579263	SETSCREW	1
20	R902579264	SETSCREW	1
21	R902470682	CENTERING TAB	1
22	R902554925	ADJUSTING BUSH	1
23	R902469966	MEASURING PISTON	1
24	R902464359	IDLE ROLLER	1
25	R902564515	BEARING FLANGE	1
26	R902557733	BEARING SHELL	2
27	R913050406	PLAIN WASHER	2
28	R902572600	CYL. ROLLER BEARING	1
29	R902571999	COUNTERSUNK-HEAD SCREW	2
30	R902578918	SOCKET HEAD CAP SCREW	8
31	R910116025	RETAINING RING	1
32	56362	PRELOAD SHIM	1
33	R910105848	RETAINING RING	1
34	R902572525	COUNTERSUNK-HEAD SCREW	2
35	R902558457	PISTON PAD	9
36	R902568649	CYLINDER SET	1
37	R902515986	RETAINING PLATE	1
38	R902561895	RETAINING BALL	1
39	R902478656	WASHER	1
40	R913060949	RETAINING RING	1
41	R902470362	COMPRESSION SPRING	1
42	R902549515	FLANGE	1
43	56338	A15/11-175-S7 COUPLER	1
44	R909831132	O-RING	1
45	58256	O-RING	1
46	R910109754	SOCKET HEAD CAP SCREW	4
*	R902569652	SEAL KIT	1

H100-01370 - IMPLEMENT PUMP SUCTION

NOTE: APPLY GREASE TO O-RINGS

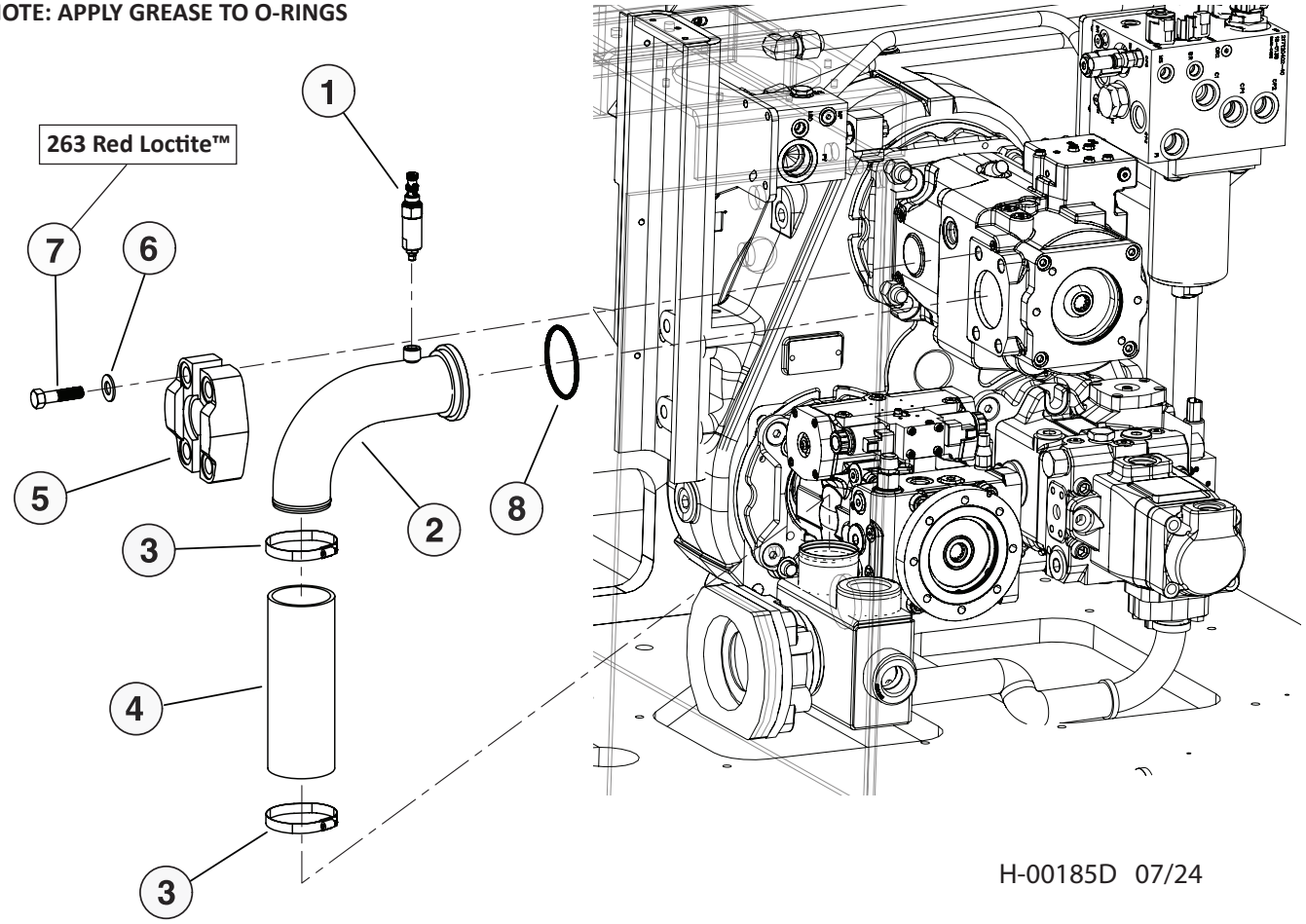

H-00185D 07/24

Item	Part #	Description	Qty.
1	55615	FITTING, ADAPTOR - BLEED - SUCTION TUBE	1
2	46265	TUBE, SUCTION - IMP PUMP	1
3	15613	CLAMP, STRAP BAND - 3.5”	2
4	65834 - (65868 - KIT)	HOSE, SUCTION, 7216-300213.5 00-00-00	1
5	22639	KIT, SPLIT FLANGE - 3” (CODE 61)(METRIC)	1
6	10721	WASHER, LOCK - .625”	4
7	15526	BOLT - .625” X 2” **263 RED LOCTITE™**	4
8	18695	O-RING - 3” SF (CODE 61/62)	1

H200-00100 - IMPLEMENT PUMP - 175CC HD

NOTE: APPLY GREASE TO O-RINGS

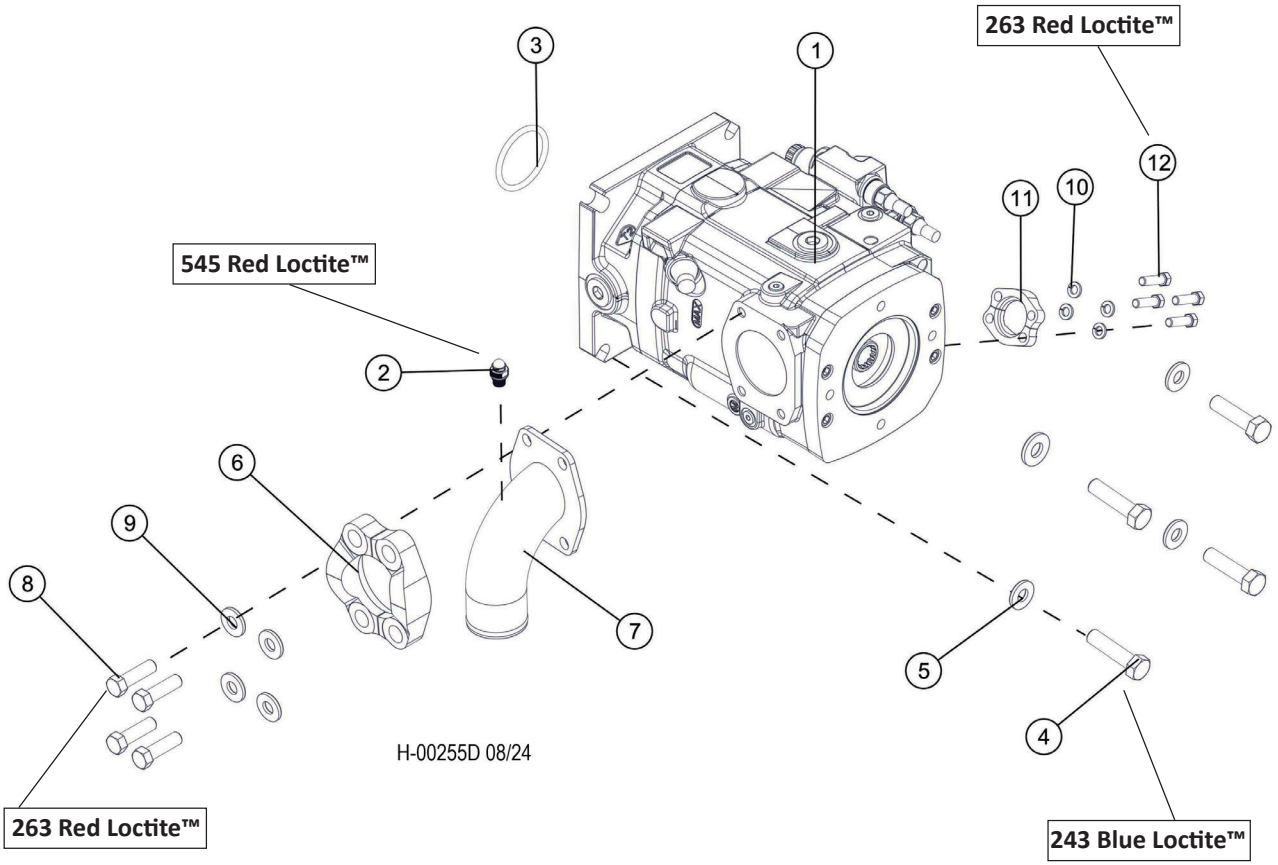

Item	Part #	Description	Qty.
1	57865	PUMP, IMPLEMENT - REX 175CC/40	1
2	57820	TAP, GAUGE PORT # 6 SAE - Oring Boss **545 RED LOCTITE™**	1
3	15442-2	O-RING, PUMP DRIVE PILOT - DRIVE	1
4	15549	BOLT - .75" X 2.0 **243 BLUE LOCTITE™**	4
5	15550	WASHER, SAE FLAT - .75"	4
6	58139	FLANGE, 13001H-5656K 175CC PUMP 57865	1
7	57880	TUBE, SUCTION SERIES 40 175cc PUMP	1
8	58378	BOLT - 5/8-11 X 1 3/4" HEX HEAD **263 RED LOCTITE™**	4
9	10771	WASHER, SAE FLAT - .625"	4
10	10710	WASHER, LOCK - .5"	4
11	15114	KIT, SPLIT FLANGE - 1.25" (CODE 62)	1
12	10736	BOLT - .5" X 2" **263 RED LOCTITE™**	4

H100-01380 - IMPLEMENT PUMP COVER - NO AUX PUMP

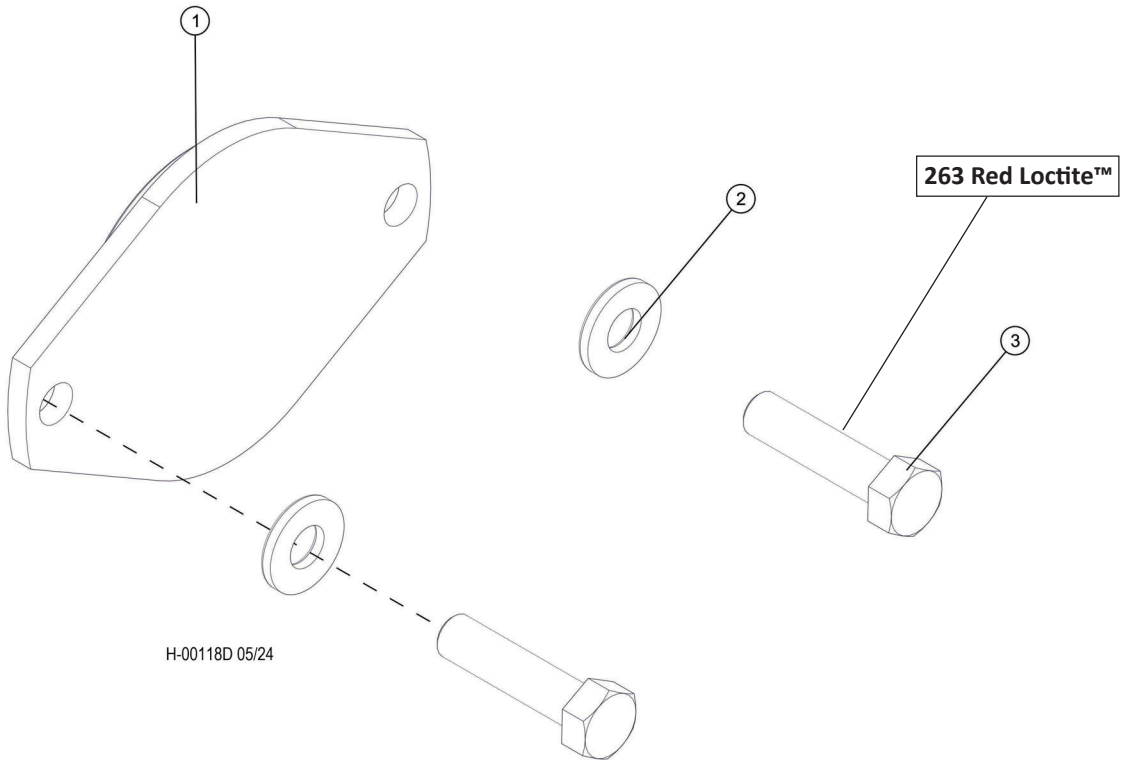

Item	Part #	Description	Qty.
1	55696	COVER, BLANKING - IMP. PUMP	1
2	10771	WASHER, SAE FLAT - .625”	2
3	15502	BOLT - .625” X 1.5” **263 RED LOCTITE™**	2

H100-01390 - AUXILARY PUMP - 60CC

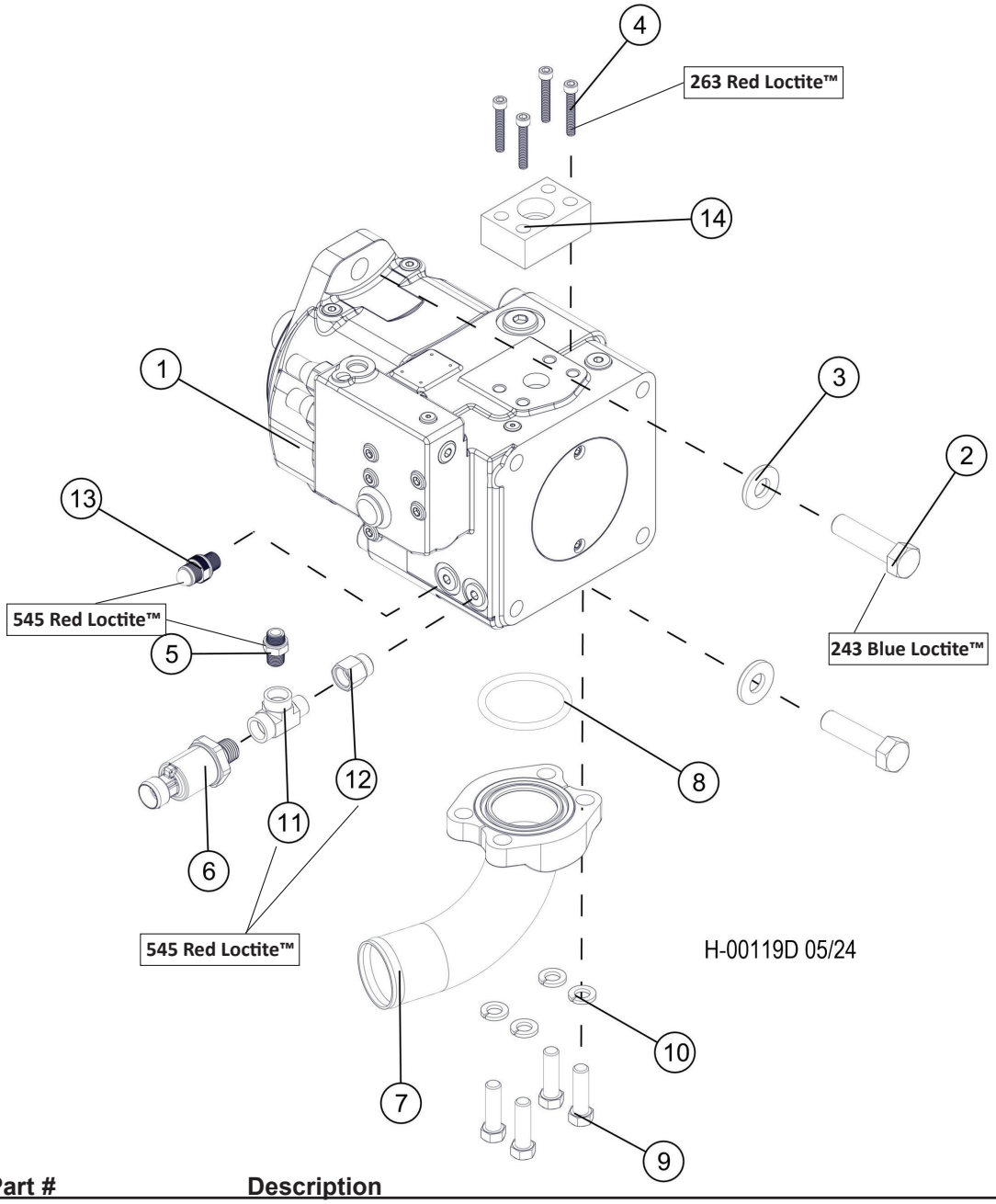

Item	Part #	Description	Qty.
1	54523	PUMP, DISC SAW - HIGH PRESSURE (60CC)	1
2	58378	BOLT - 5/8-11 X 1 3/4" HEX HEAD **243 BLUE LOCTITE™**	2
3	58390	WASHER, FLAT - 5/8 ID x 1.0 OD (10 GA)	2
4	58399	BOLT - 3/8-16x1.5, SHC **263 RED LOCTITE™**	4
5	55214	CONNECTOR, STR - 848-TTO-04X04 (W/.031) **545 RED LOCTITE™**	1
6	24532	TRANSDUCER, DISC SAW Pressure	1
7	55713	FLANGE, ELBOW - 1988-32-32	1
8	58991	O-RING, HP DISC SAW SUCTION	1
9	10739	BOLT - .5" X 1.5"	4
10	10710	WASHER, LOCK - .5"	4
11	52186	TEE, RUN - MALE (4 A0G5J5-S) **545 RED LOCTITE™**	1
12	16294	BUSHING, REDUCER - 6410-6-4 **545 RED LOCTITE™**	1
13	57820	TAP, GAUGE PORT # 6 SAE - Oring Boss **545 RED LOCTITE™**	1
14	19808	CONNECTOR, FLANGE PAD -FP62-12-12ORB-MK	1

H100-01391 - 60CC AUXILARY PUMP COMPONENTS

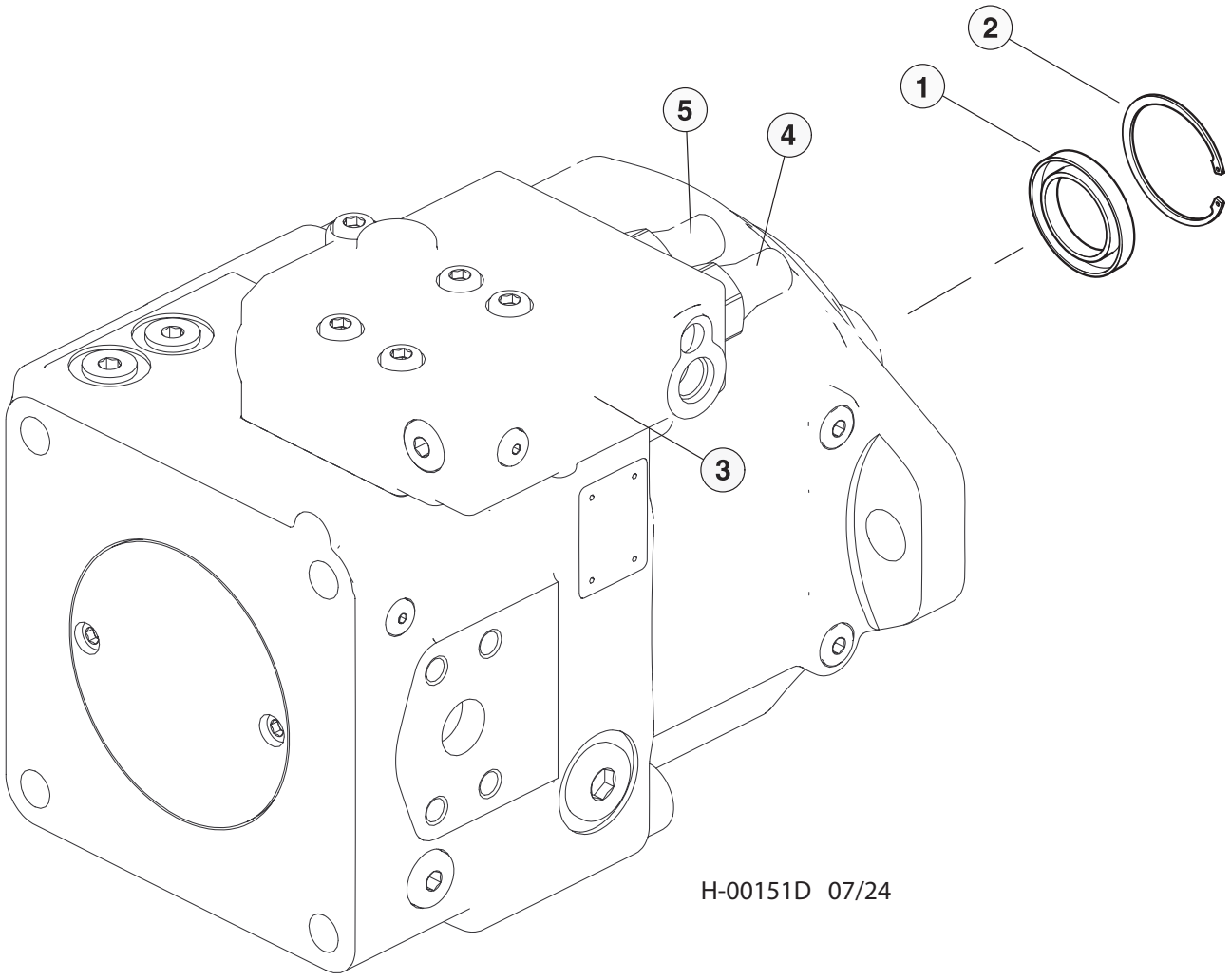

Item	Part #	Description	Qty.
	54523	PUMP, DISC SAW - HIGH PRESSURE (60CC)	1
1	57451	SEAL, SHAFT - DISC SAW (HIGH PRESSURE)	1
2	20685	RING, SNAP - SHAFT SEAL (AA6VM160 MOTOR)	1
3	699680	CONTROL HOUSING	1
4	699550	CARTRIDGE DR	1
5	699550	CARTRIDGE DR	1
*	58256	ORING - THRU-DRIVE (GREEN- HIGH TEMP)	1
*	24532	PRESSURE SWITCH	1

***MEANS NOT SHOWN**

H100-01392 - 60CC AUXILARY PUMP COMPONENTS

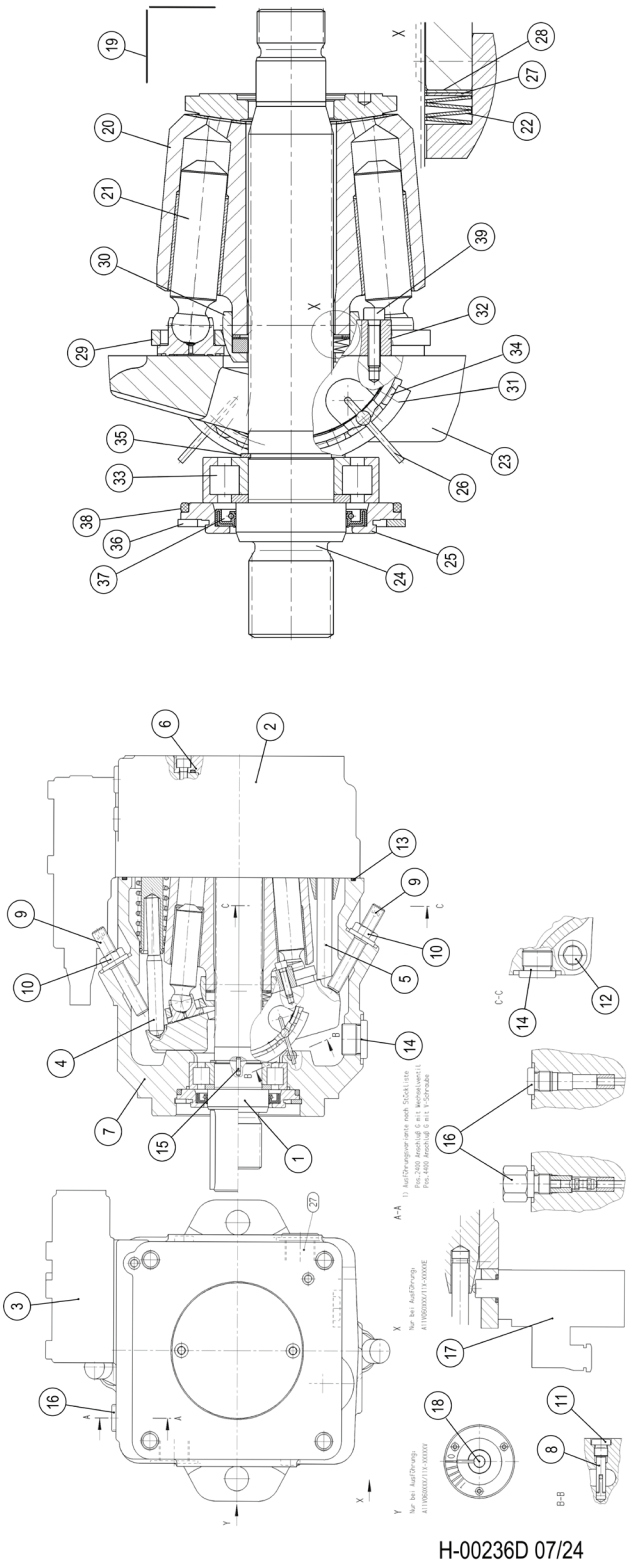

H-00236D 07/24

H100-01392 - 60CC AUXILARY PUMP COMPONENTS

Item	Part #	Description	Qty.
1	R902044500	ROTARY GROUP	1
2	R909613038	CONNECTION PLATE, LL	1
3	R909601060	REGULATOR	1
4	R909446454	CONTROL	1
5	R909441158	CONTROL	1
6	R909441156	COVER	1
7	R902118161	HOUSING	1
8	R902132714	PIVOT PIN	4
9	R909449078	SETSCREW	2
10	20331	NUT, SEAL - HPRV ADJ (AA4VG125)	2
11	699490	PLUG, PORT - FOR A25FW	4
12	R909153680	SOCKET HEAD CAP SCREW	4
13	R909830217	O-RING	1
14	R909153339	SCREW PLUG	2
15	R913016373	SLOTTED SPRING PIN	2
16	R909153371	SCREW PLUG	1
17	-	-	-
18	-	-	-
19	R902002457	SEAL KIT	1
20	R902044493	CYLINDER	1
21	R909440190	PISTON PAD	9
22	R909074126	CUP-SPRING STACK	1
23	R909440397	CRADLE	1
24	R909449724	DRIVE SHAFT	1
25	R909440442	LOCKING RING	1
26	R909076233	WIRE	4
27	R909078316	SHIM RING	1
*	R909078317	SHIM RING	1
*	R909411553	SHIM RING	1
*	R909411554	SHIM RING	1
28	R909078317	SHIM RING	1
29	R902205417	RETAINING PLATE	1
30	R902041870	RETAINING BALL	1
31	R902066586	BEARING SHELL PAIR	1
32	R909432414	RETAINING SEGMENT	2
33	R909153801	CYL. ROLLER BEARING	1
34	R909831918	CAGE PAIR	1
35	R909083360	RETAINING RING	1
36	20685	RING, SNAP - SHAFT SEAL (AA6VM160 MOTOR)	1
37	57451	SEAL, SHAFT - DISC SAW (HIGH PRESSURE)	1
38	R909083822	O-RING	1
39	R909831328	SOCKET HEAD CAP SCREW	4

H100-01393 - 60CC AUXILARY PUMP COMPONENTS

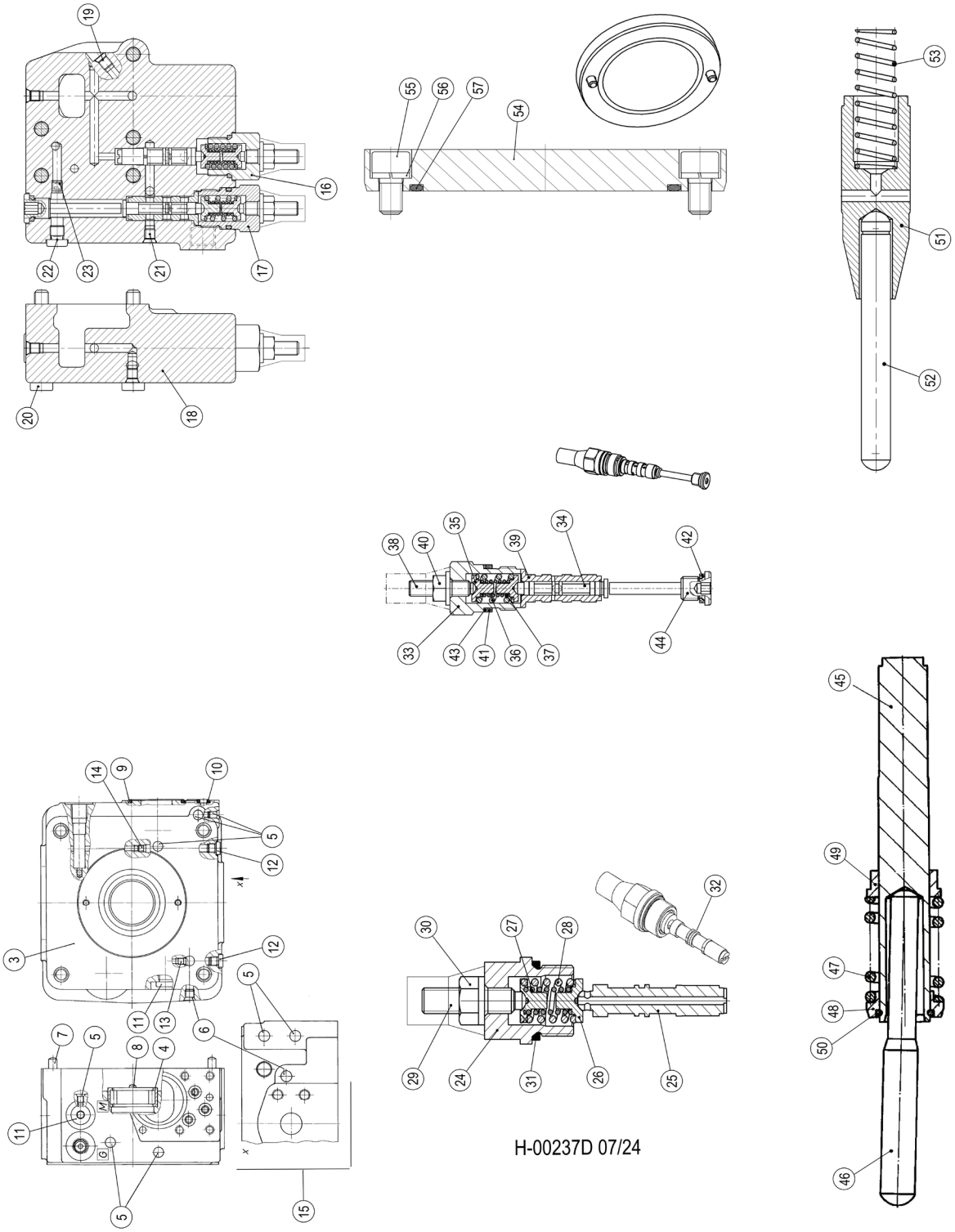

H-00237D 07/24

H100-01393 - 60CC AUXILARY PUMP COMPONENTS

Item	Part #	Description	Qty.
1	R902044491	CYLINDER	1
2	R902010095	CONTROL PLATE, LEFT-HAND ROTATION	1
3	R909651962	CONNECTION PLATE, LL	1
4	R909156249	CYL. ROLLER BEARING	1
5	R909831318	DOUBLE BREAK-OFF PLUG	4
6	R909831319	DOUBLE BREAK-OFF PLUG	1
7	R909084213	STRAIGHT PIN	2
8	R909087755	STRAIGHT PIN	1
9	R909086336	O-RING	1
10	R902602890	R-RING	3
11	R909153371	SCREW PLUG	2
12	R909154024	SCREW PLUG	2
13	R909156494	NOZZLE	1
14	R909156493	NOZZLE	1
15	R902002464	SEAL KIT	1
16	699550	CARTRIDGE DR	1
17	R909608948	CONTROL ELEMENT	1
18	699680	CONTROL HOUSING	1
19	R909445306	DOUBLE BREAK-OFF PLUG	1
20	R909083043	SOCKET HEAD CAP SCREW	5
21	R909831318	DOUBLE BREAK-OFF PLUG	7
22	R909154024	SCREW PLUG	1
23	R909156490	NOZZLE	1
24	R909440779	SCREW PLUG	1
25	R902004621	CONTROL PISTON	1

H100-01394 - 60CC AUXILARY PUMP COMPONENTS

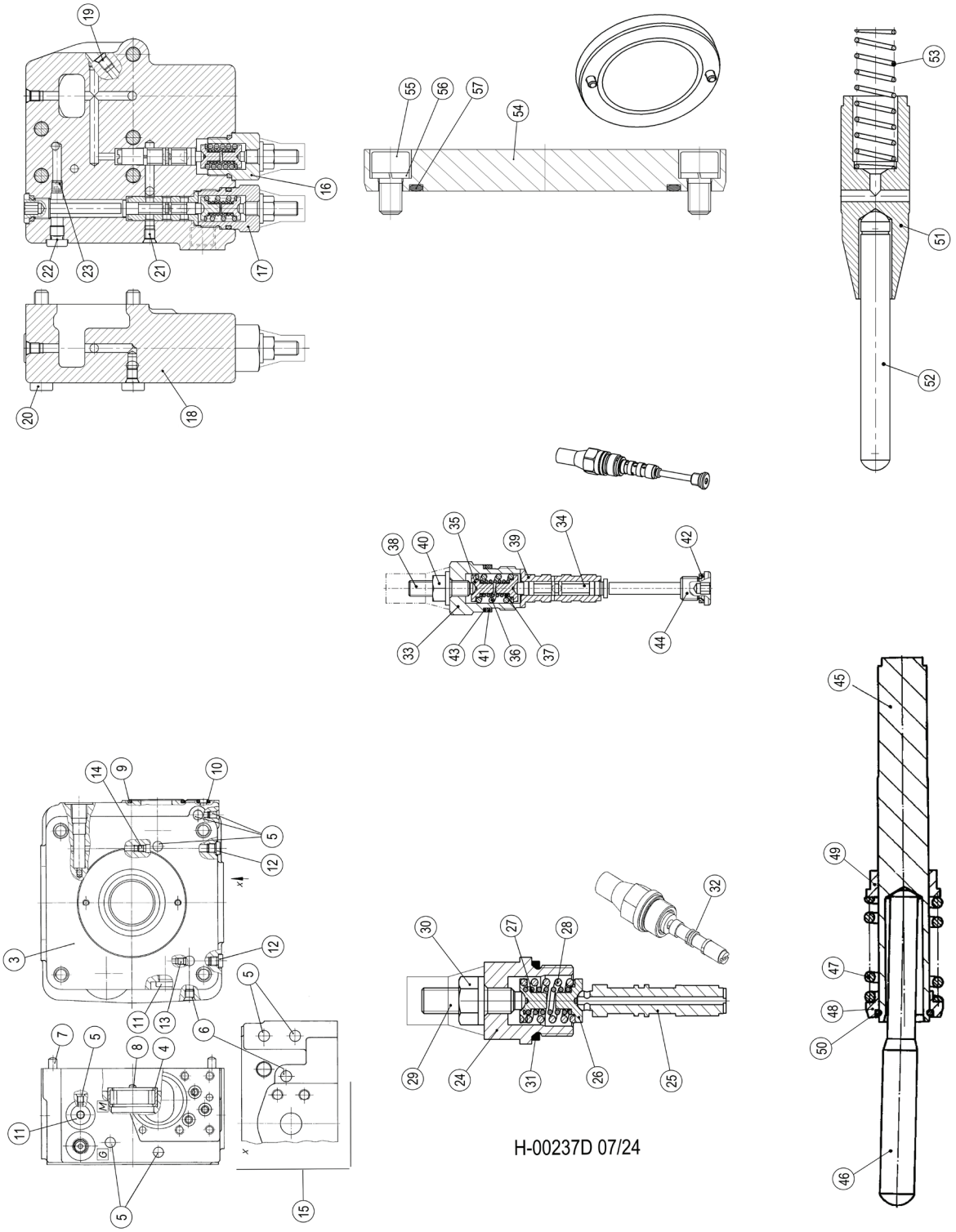

H-00237D 07/24

H100-01394 - 60CC AUXILARY PUMP COMPONENTS

Item	Part #	Description	Qty.
26	R909444160	SPRING BOLT	2
27	R909436395	COMPRESSION SPRING	1
28	R909436795	COMPRESSION SPRING	1
29	R909444953	SETSCREW	1
30	R909152707	SEALING NUT	1
31	R909083758	O-RING	1
32	R902221229	SEAL KIT	1
33	R902262155	SCREW PLUG	1
34	R909449719	CONTROL PISTON	1
35	R909436839	SPRING BOLT	2
36	R909436394	COMPRESSION SPRING	1
37	R909436395	COMPRESSION SPRING	1
38	R909444953	SETSCREW	1
39	R902004934	CONTROL SLEEVE	1
40	R909152707	SEALING NUT	1
41	R909083758	O-RING	1
42	R90908374	O-RING	1
43	R900228795	BACKUP RING	1
44	R902029165	SCREW PLUG	1
45	R909445195	POSITIONING PISTON	1
46	R909445749	ADJUSTING ROD	1
47	R909440770	COMPRESSION SPRING	1
48	R909440739	SPRING DISK	1
49	R902025360	BUSHING	1
50	R909830683	SNAP RING	1
51	R909651665	RESET PISTON	1
52	R902192192	RESET ROD	1
*	R909651662	RESET ROD	1
*	R909651663	RESET ROD	1
*	R909651664	RESET ROD	1
53	R909440771	COMPRESSION SPRING	1

H100-01400 - AUXILARY PUMP - 71CC

NOTE: APPLY GREASE TO O-RINGS

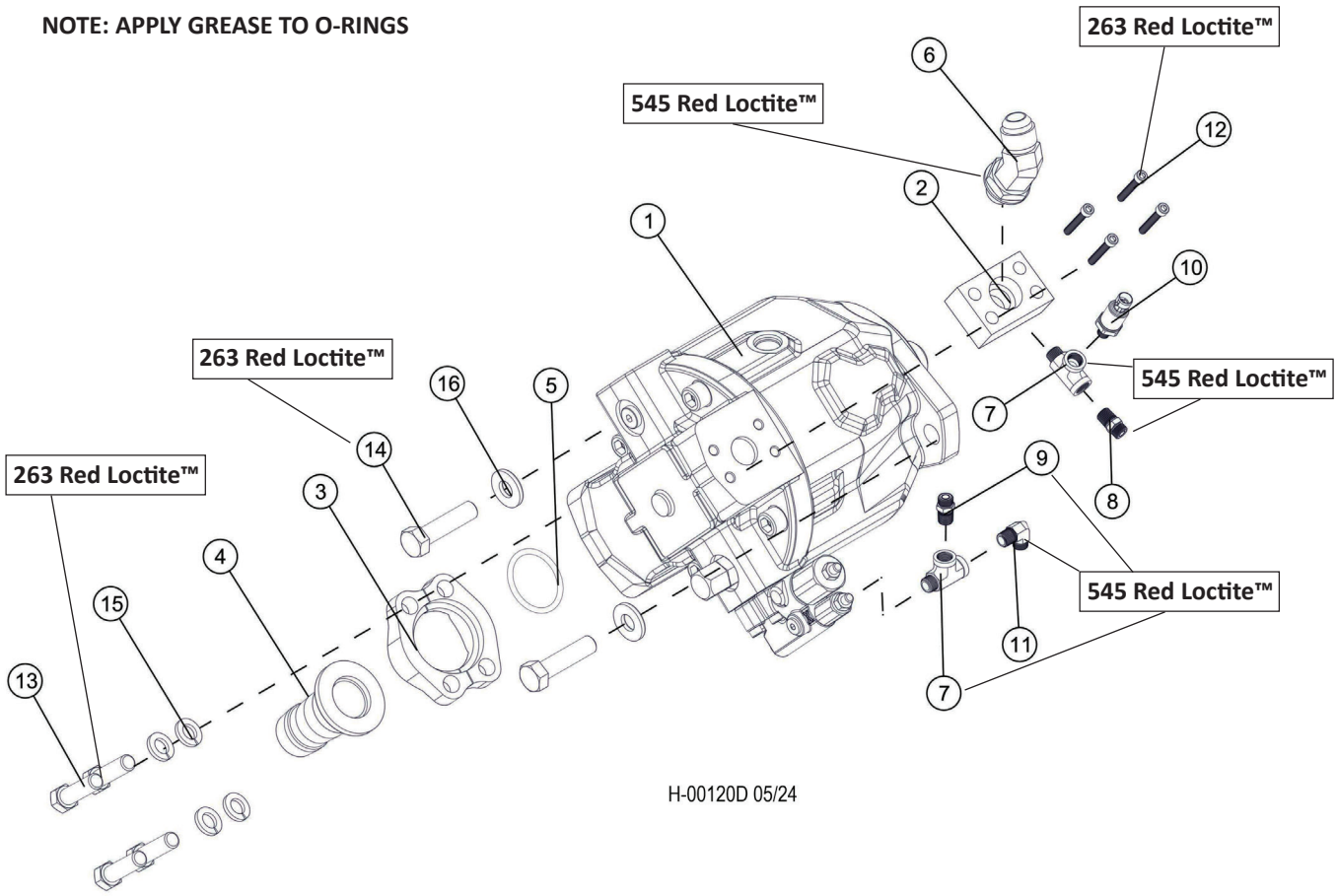

Item	Part #	Description	Qty.
1	19509	PUMP, AUX.-BRUSH CUTTER (W/MAX VOL)	1
2	22758	CONNECTOR, FLANGE PAD - W46K-16-16 (SAE)	1
3	21226	KIT, SPLIT FLANGE - 2.0” (CODE 61)	1
4	52148	MANIFOLD, FLUSHING - WHEEL MOTORS (SEQUE	1
5	58991	O-RING, HP DISC SAW SUCTION	1
6	16460	ELBOW, 45 - FF2068T-1616S **545 RED LOCTITE™**	1
7	52186	TEE, RUN - MALE (4 A0G5J5-S) **545 RED LOCTITE™**	2
8	55214	CONNECTOR, STR - 848-TTO-04X04 (W/.031) **545 RED LOCTITE™**	1
9	16541	CONNECTOR, STR - FF1852T-0404S **545 RED LOCTITE™**	1
10	24532	TRANSDUCER, DISC SAW Pressure **545 RED LOCTITE™**	1
11	16540	ELBOW, 90 - FF1868T-0404S **545 RED LOCTITE™**	1
12	58399	BOLT - 3/8-16x1.5, SHC **263 RED LOCTITE™**	4
13	10739	BOLT - .5” X 1.5” **263 RED LOCTITE™**	4
14	58378	BOLT - 5/8-11 X 1 3/4” HEX HEAD **263 RED LOCTITE™**	2
15	10710	WASHER, LOCK - .5”	4
16	58390	WASHER, FLAT - 5/8 ID x 1.0 OD (10 GA)	2

H100-01401 - 71CC AUXILARY PUMP COMPONENTS

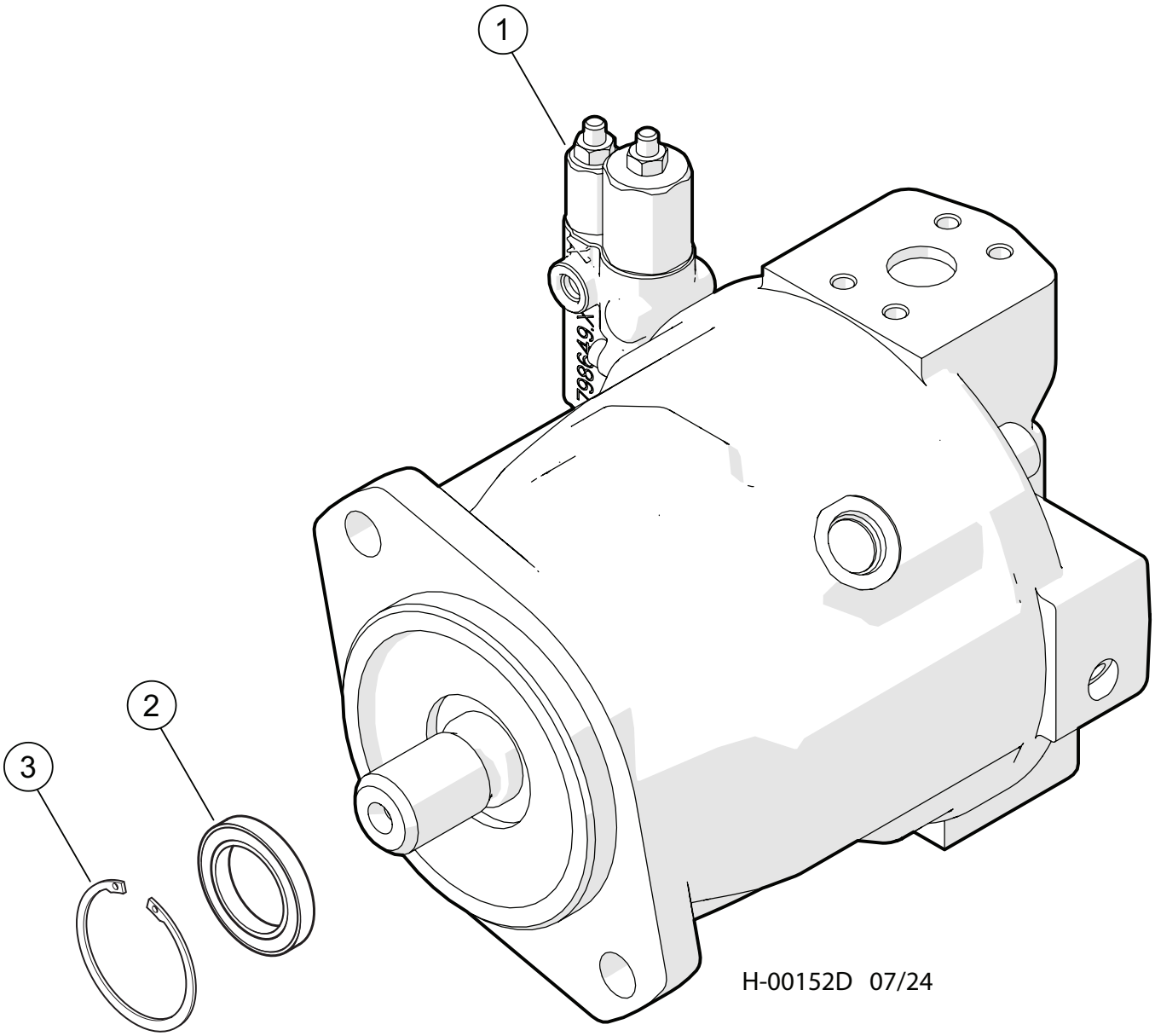

Item	Part #	Description	Qty.
	19509	PUMP, AUX.-BRUSH CUTTER (W/MAX VOL) 71cc	1
1	201032304-50	UNLOADING BLOCK	1
2	20685	RETAINING RING	1
3	R910764701	SHAFT SEAL RING	1
*	R902088365	COUPLING	1
*	54032	THRU DRIVE - W/TRACK DRIVE PUMP	1
	5140-635-007	SEAL KIT	1

***MEANS NOT SHOWN**

H100-01402 - 71CC AUXILARY PUMP COMPONENTS

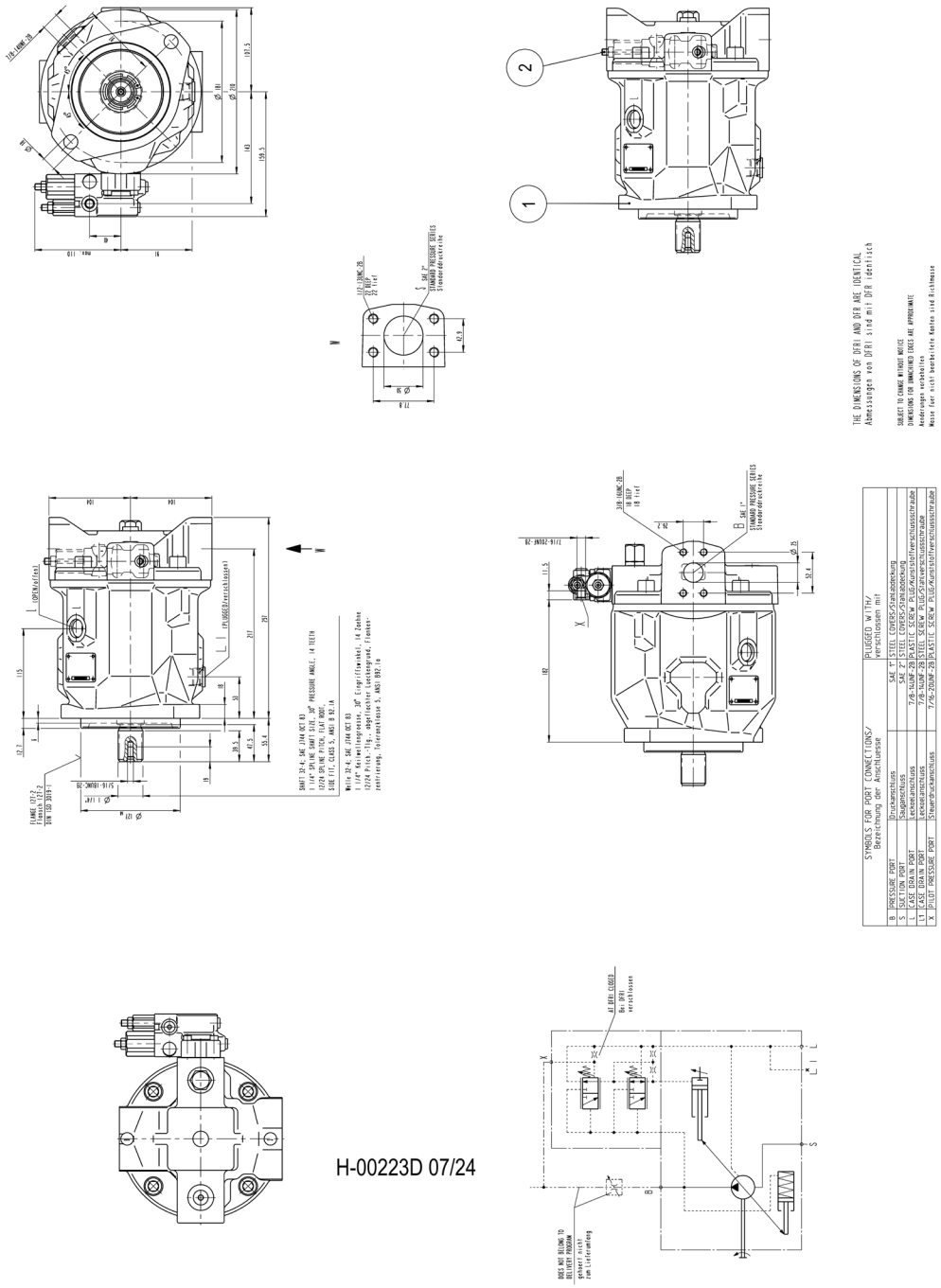

H-00223D 07/24

Item	Part #	Description	Qty.
1	R902429405	BASE UNIT	1
2	R902470580	CONTROL VALVE	1

H100-01403 - 71CC AUXILARY PUMP COMPONENTS

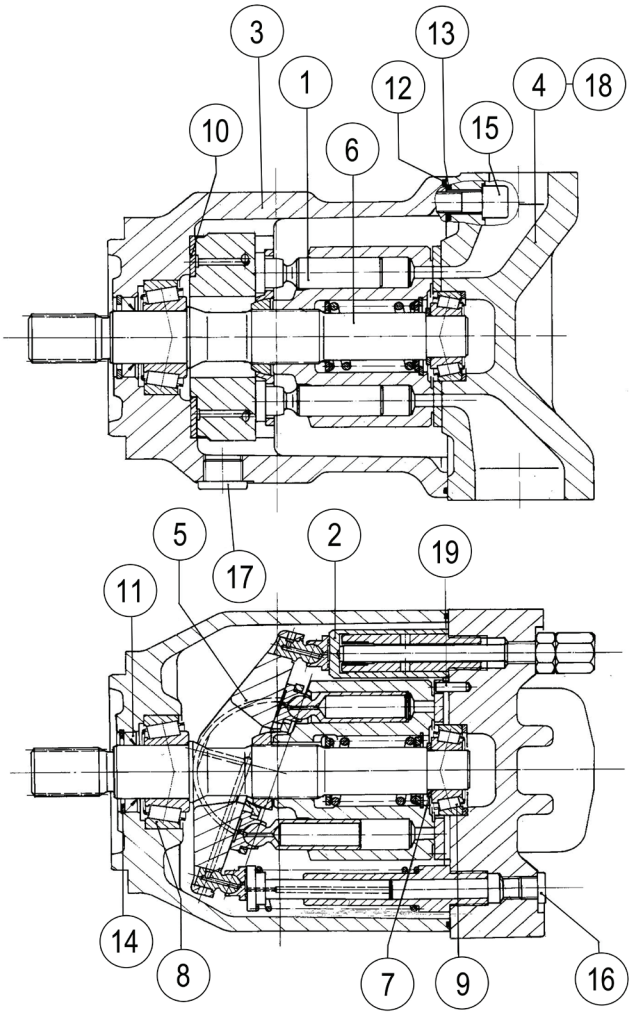

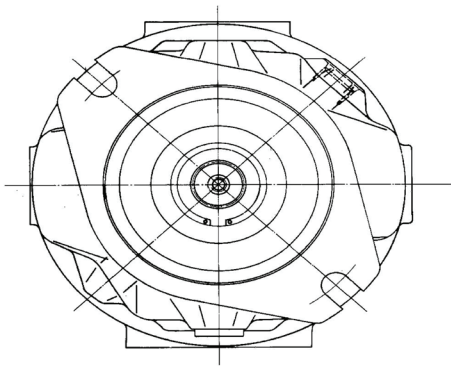

H-00224D 07/24

Item	Part #	Description	Qty.
1	R910960499	ROTARY GROUP	1
2	R902538141	ADJUSTING PIECE	1
3	R910915775	PUMP HOUSING	1
4	R902426033	CONNECTION PLATE	1
5	R910961020	SWASH PLATE	1
6	R910998844	DRIVE SHAFT	1
7	R910939005	ADJUSTMENT SHIM	1
8	R910720224	TAPERED-ROLLER BEARING	1
9	R910720232	TAPERED-ROLLER BEARING	1
10	R910902777	BEARING SHELL	2
11	R910764701	SHAFT SEALING RING	1
12	R910720194	O-RING	1
13	R913052118	R-RING	4
14	R910941918	RETAINING RING	1
15	R910110272	SOCKET HEAD CAP SCREW	4
16	R909151979	SCREW PLUG	1
17	R909153339	SCREW PLUG	1
18	R902584425	DOUBLE BREAK-OFF PLUG	1
19	R902533908	STRAIGHT PIN	1

H100-01404 - 71CC AUXILARY PUMP COMPONENTS

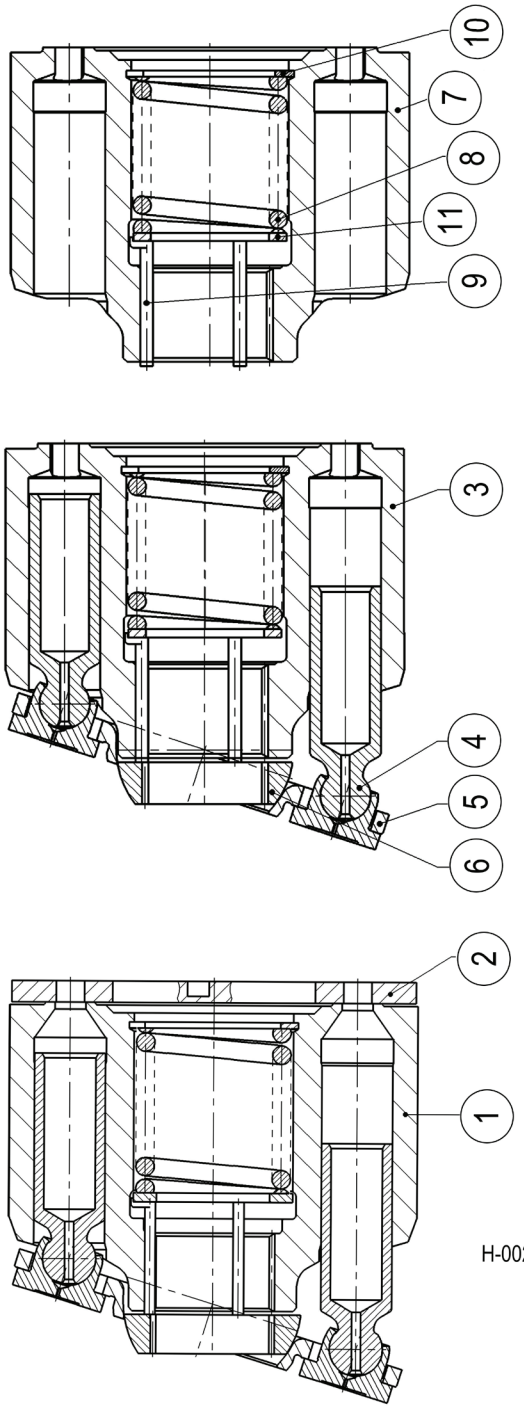

H100-01404 - 71CC AUXILARY PUMP COMPONENTS

Item	Part #	Description	Qty.
1	R910993465	ROTARY GROUP	1
2	R902445480	DISTRIBUTOR PLATE	1
3	R902512987	CYLINDER ASSEMBLY KIT	1
4	R902431406	PISTON PAD	9
5	R902437512	RETAINING PLATE	1
6	R902443449	RETAINING BALL	1
7	R910999302	CYLINDER	1
8	R910720178	COMPRESSION SPRING	1
9	R902400741	PRESSURE PIN	3
10	R910919038	V-RING	1
11	R910720186	SUPPORTING DISC	1

H100-01405 - 71CC AUXILARY PUMP COMPONENTS

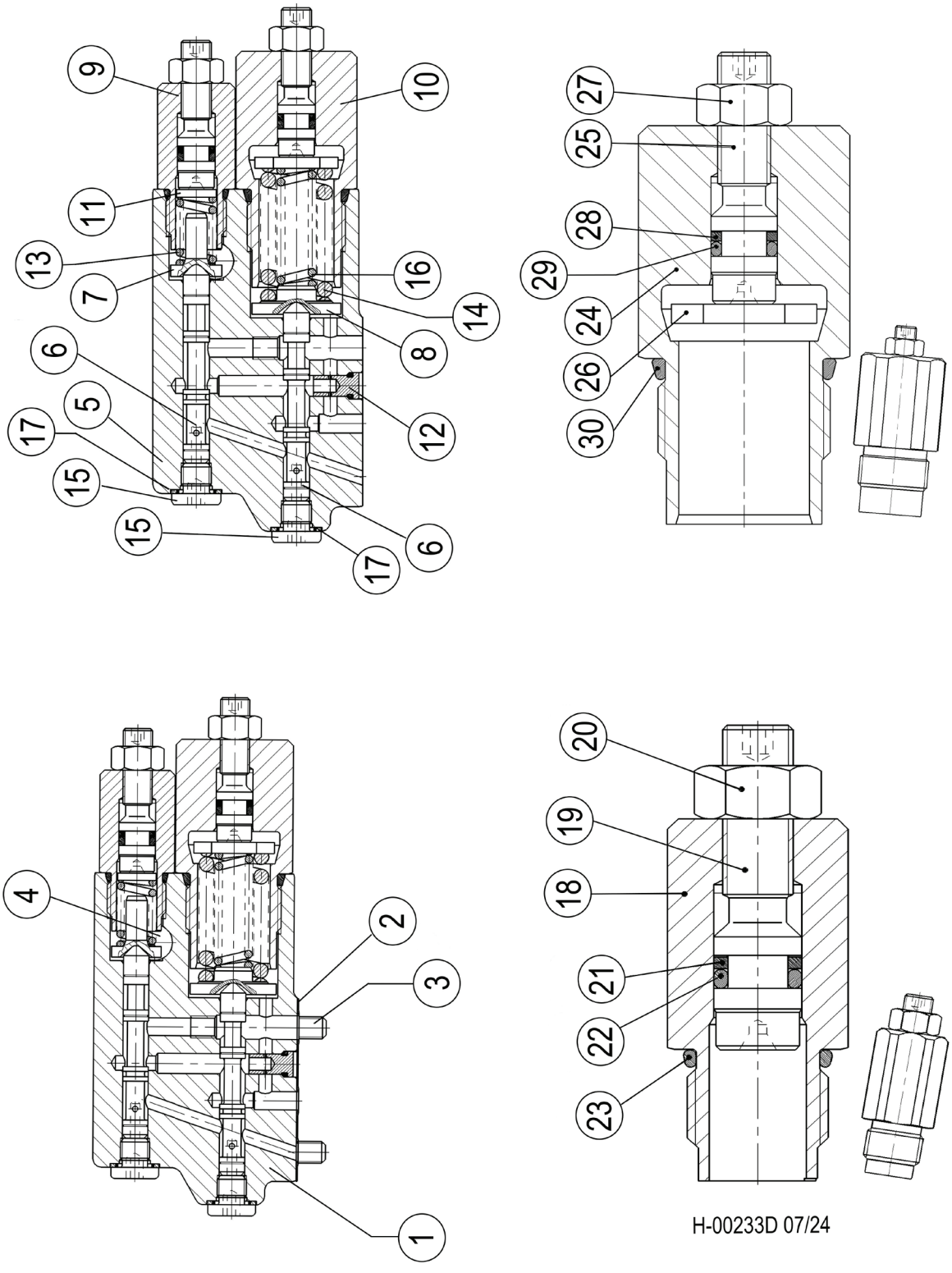

H-00233D 07/24

H100-01405 - 71CC AUXILARY PUMP COMPONENTS

Item	Part #	Description	Qty.
1	R902470582	CONTROL VALVE	1
2	R902573525	SEAL	1
3	R910900443	SOCKET HEAD CAP SCREW	4
4	R910764647	SCREW PLUG	1
5	R902434572	VALVE HOUSING	1
6	R910900311	VALVE SPOOL	2
7	R910920595	SPRING DISK	1
8	R902449500	SPRING DISK	1
9	R902451578	SERVO UNIT	1
10	R902451580	SERVO UNIT	1
11	R910900362	WASHER	1
12	R902451582	ORIFICE	1
13	R910920596	COMPRESSION SPRING	1
14	R910707031	COMPRESSION SPRING	1
15	R910933812	SCREW PLUG	2
16	R910911509	COMPRESSION SPRING	1
17	R910642827	BONDED SEAL RING	2
18	R902448797	SCREW PLUG	1
19	R902445453	STUD BOLT	1
20	R910934194	HEXAGON NUT	1
21	R910946269	BACKUP RING	1
22	R910080519	O-RING	1
23	R910919314	O-RING	1
24	R902474069	SCREW PLUG	1
25	R902445453	STUD BOLT	1
26	R902417465	WASHER	1
27	R910934194	HEXAGON NUT	1
28	R910946269	BACKUP RING	1
29	R910080519	O-RING	1
30	R910919322	O-RING	1

H100-01410 - MANIFOLD SINGLE PUMP FLOW

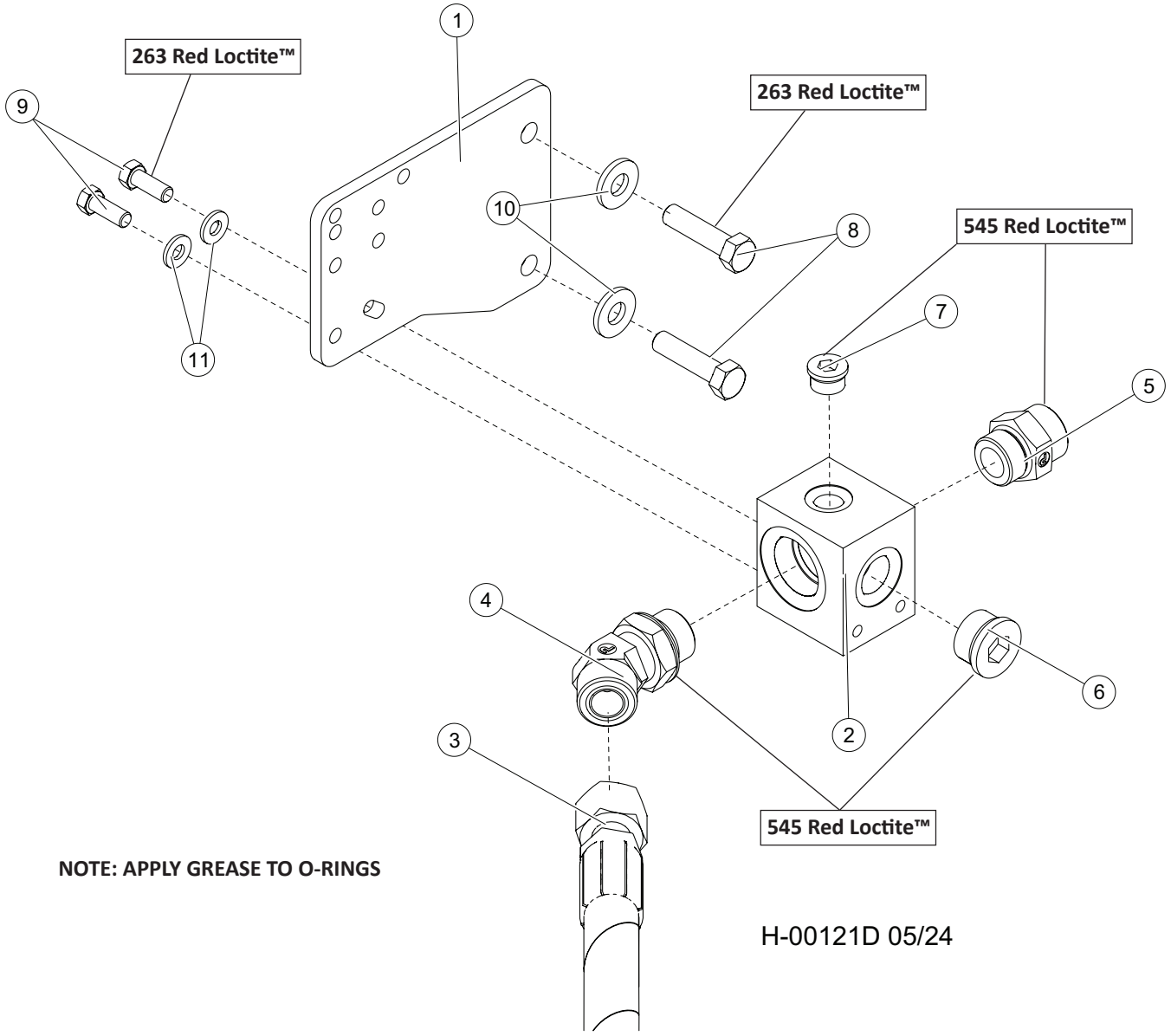

NOTE: APPLY GREASE TO O-RINGS

H-00121D 05/24

Item	Part #	Description	Qty.
1	60444	MOUNT, MANIFOLD	1
2	51450	MANIFOLD, RETURN CHECK	1
3	58027	HOSE, HYD, IMP PRESS 40/D-SERIES	1
4	17056	ELBOW, 45 - FF2068T-2020S **545 RED LOCTITE™**	1
5	17344	CONNECTOR, STR - FF1852T-2020S **545 RED LOCTITE™**	1
6	15584	PLUG - 6408-HHP-12 **545 RED LOCTITE™**	1
7	18949	PLUG - 6408-HHP-8 **545 RED LOCTITE™**	1
8	50100	BOLT - .5” X 1.25” **263 RED LOCTITE™**	2
9	11707	BOLT - .375” X 1” **263 RED LOCTITE™**	2
10	15534	WASHER, SAE FLAT - .5”	2
11	15528	WASHER, SAE FLAT - .375” OR 3/8”	2

H100-01420 - PUMP, TRACK DRIVE - LH (VTG90)

NOTE: APPLY GREASE TO O-RINGS

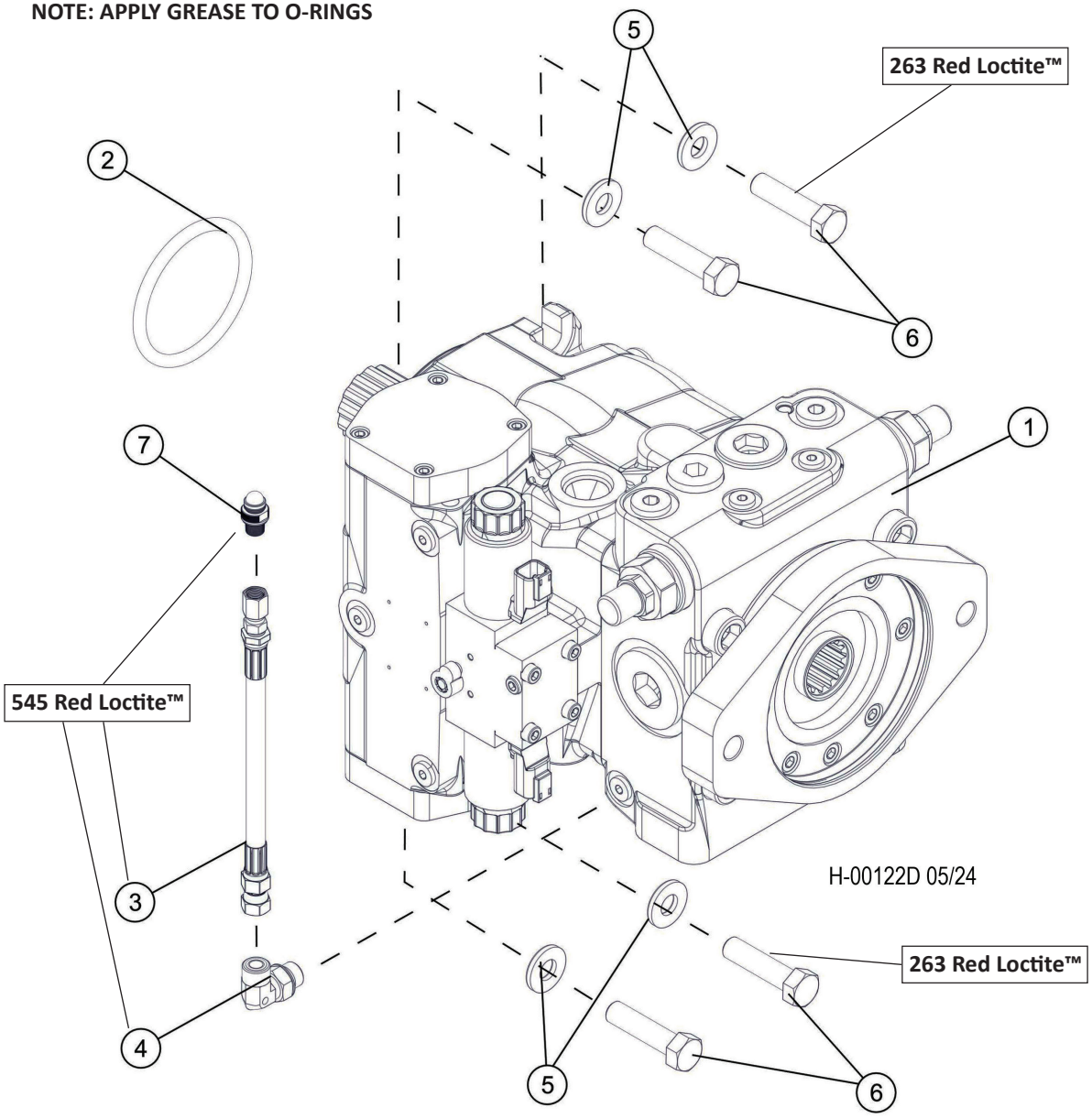

Item	Part #	Description	Qty.
1	55458	PUMP, TRACK DRIVE - LH C SERIES (VTG90)	1
2	53718	ORING, TRACK DRIVE PUMP PILOT	1
3	58063	HOSE, GAUGE PORT EXTENSION **545 RED LOCTITE™**	1
4	16540	ELBOW, 90 - FF1868T-0404S **545 RED LOCTITE™**	1
5	15534	WASHER, SAE FLAT - .5”	4
6	50100	BOLT - .5” X 1.25” **263 RED LOCTITE™**	4
7	57819	TAP, GAUGE PORT - #4 SAE ORING BOSS- ST **545 RED LOCTITE™**	1

H100-01421 - PUMP, TRACK DRIVE - LH (VTG90)

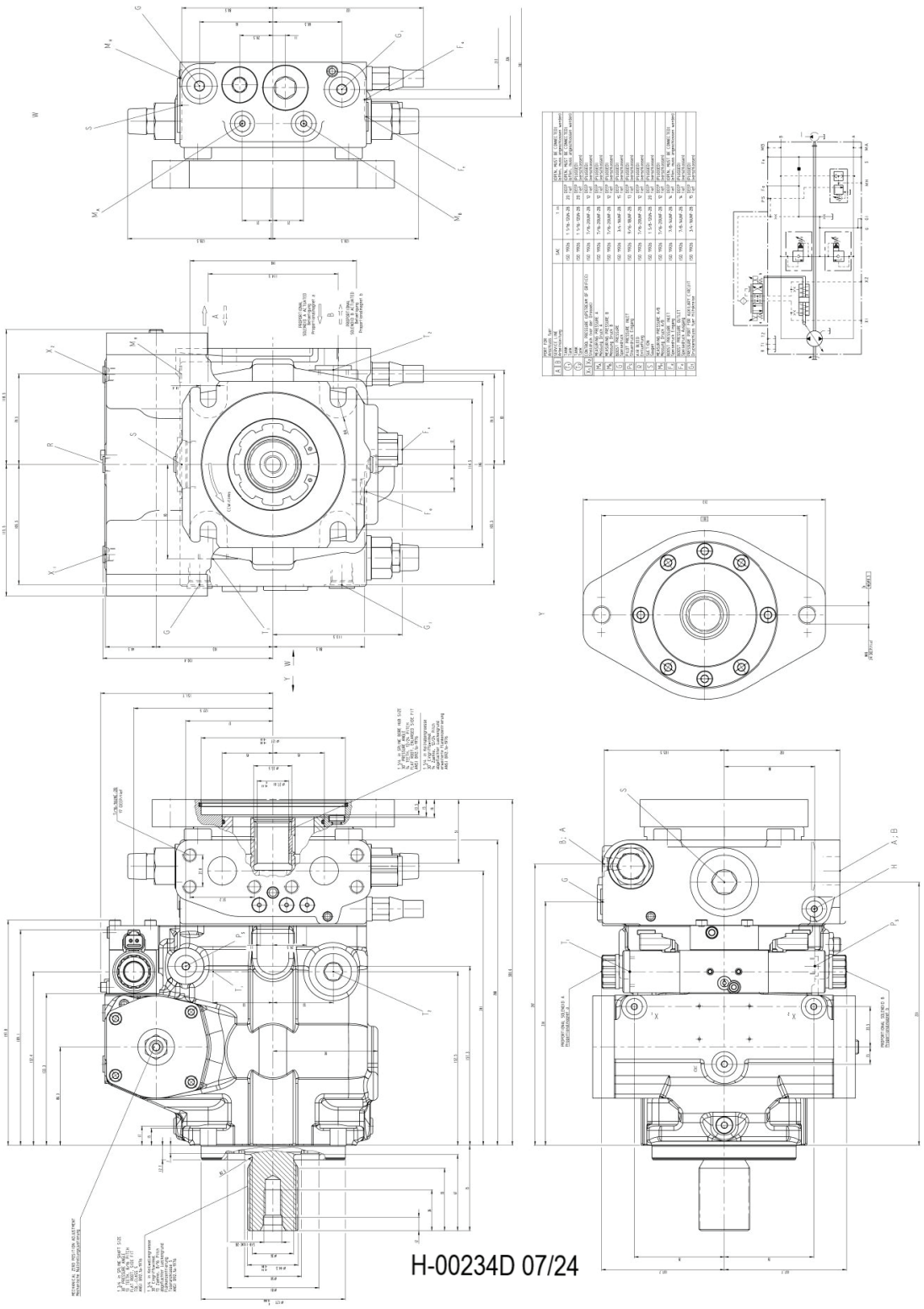

H100-01421 - PUMP, TRACK DRIVE - LH (VTG90)

Item	Part #	Description	Qty.
1	R902199506	ROTARY GROUP	1
2	R902009059	CONTROL	1
3	R902117112	CONNECTION PLATE	1
4	R902244700	BELL HOUSING	1
5	53729	VALVE, STROKE CONTROL - AA4VG90 24V	1
6	R902008951	HOUSING	1
7	R902114380	PIVOT PIN	2
8	R909405732	POITIONING PIN	1
9	R909154480	SCREW PLUG	1
10	R909153371	SCREW PLUG	1
11	699540	NUT, LOCKING	4
12	R909083228	SCREW PLUG	1
13	R909086731	O-RING	1
14	R909083490	SETSCREW	2
15	R909831318	DOUBLE BREAK-OFF PLUG	1
16	R909156495	NOZZLE	2
17	R913016373	SLOTTED SPRING PIN	2
18	699490	PLUG, PORT - FOR A25FW	2
19	R909153339	SCREW PLUG	1
20	R909153418	SCREW PLUG	1
21	R909153330	O-RING	1
22	R909153338	SCREW PLUG	2
23	R909156495	NOZZLE	1
24	R902012117	THREADED PART	1

H100-01423 - PUMP, TRACK DRIVE - LH (VTG90)

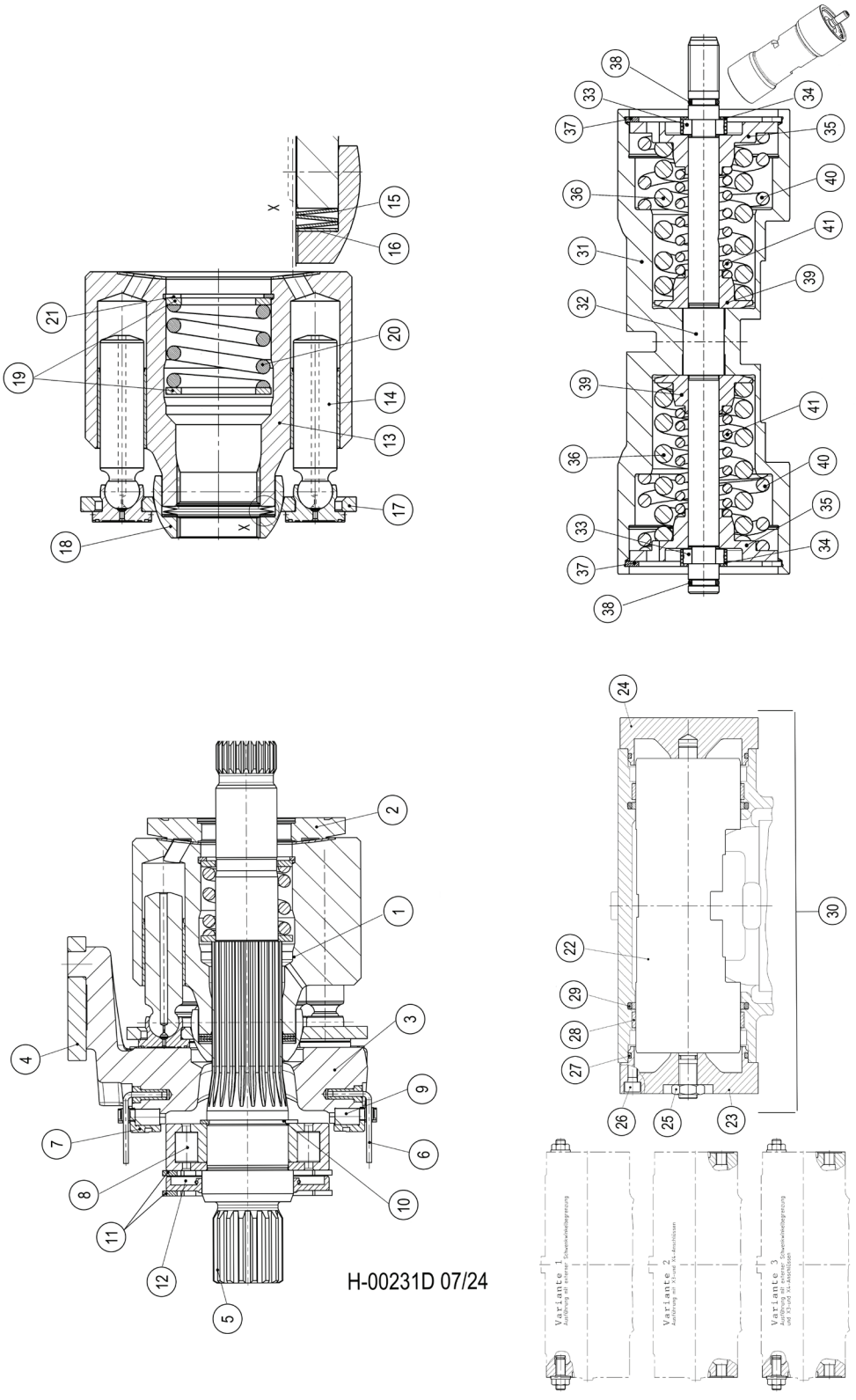

H100-01423 - PUMP, TRACK DRIVE - LH (VTG90)

Item	Part #	Description	Qty.
1	56333	ROTARY GROUP	1
2	R902195224	CONTROL PLATE, LEFT-HAND ROTATION	1
3	R902283514	CRADLE	1
4	R909449810	SLIDER	1
5	R909921550	DRIVE SHAFT	1
6	R902188337	WIRE	2
7	R913054564	BEARING SHELL PAIR	1
8	R909153104	CYL. ROLLER BEARING	1
9	R909830165	CAGE PAIR	1
10	56106	RETAINING RING	1
11	53726	RING, SNAP - SHAFT SEAL (AA4VG90)	2
12	53727	SEAL, SHAFT - TRACK DRIVE PUMP (AA4VG90)	1
13	R902252004	CYLINDER	1
14	R909414515	PISTON PAD	9
15	R902192958	CUP-SPRING STACK	1
16	R909432983	SHIM RING	1
*	R909432984	SHIM RING	1
*	R909432985	SHIM RING	1
*	R909432986	SHIM RING	1
17	R902205455	RETAINING PLATE	1
18	R902136991	RETAINING BALL	1
19	R909449885	WASHER	2
20	R909435649	COMPRESSION SPRING	1
21	R909084556	RETAINING RING	1
22	R902020313	POSITIONING PISTON	1
23	R902004827	COVER	1
24	R902004873	COVER	1
25	R909154918	HEXAGON NUT	1

H100-01424 - PUMP, TRACK DRIVE - LH (VTG90)

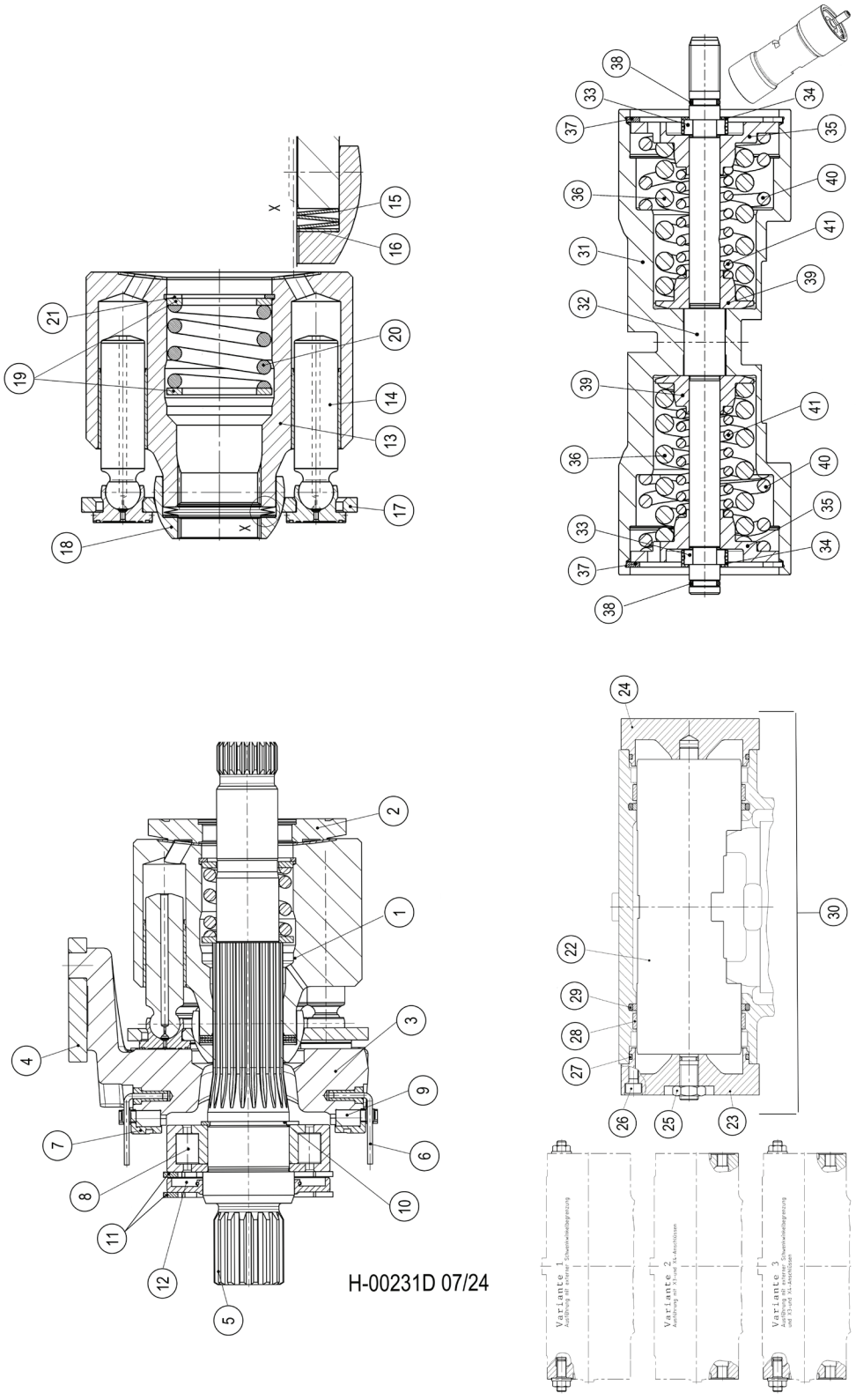

H100-01424 - PUMP, TRACK DRIVE - LH (VTG90)

Item	Part #	Description	Qty.
26	R909084744	SOCKET HEAD CAP SCREW	8
27	R909084482	O-RING	2
28	R902600837	ROD GUIDANCE RING	2
29	R902600196	ROD SEAL	2
30	R902002372	SEAL KIT	1
31	R902192998	POSITIONING PISTON	1
32	R902278029	ROD	1
33	R902013493	RING	2
*	R902015508	RING	2
*	R902015509	RING	2
*	R902015510	RING	2
*	R902015511	RING	2
*	R902015512	RING	2
*	R902015513	RING	2
*	R902015514	RING	2
34	R902600489	LOCATING RING	2
35	R902020101	SPRING DISK	2
36	R909432979	COMPRESSION SPRING	2
37	R902280445	RETAINING RING	2
38	R909085709	O-RING	1
39	R909449248	SPRING DISK	2
40	**SEE DESCRIPTION**	CALL	1
41	**SEE DESCRIPTION**	CALL	1

H100-01425 - PUMP, TRACK DRIVE - LH (VTG90)

NOTE: APPLY GREASE TO O-RINGS

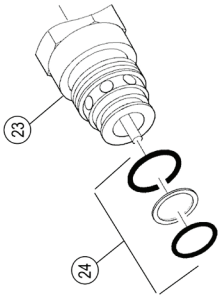

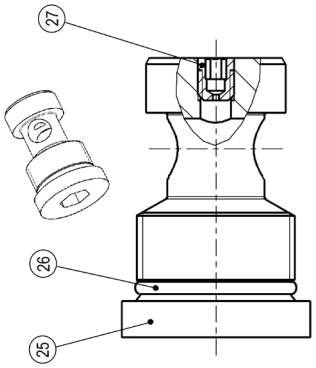

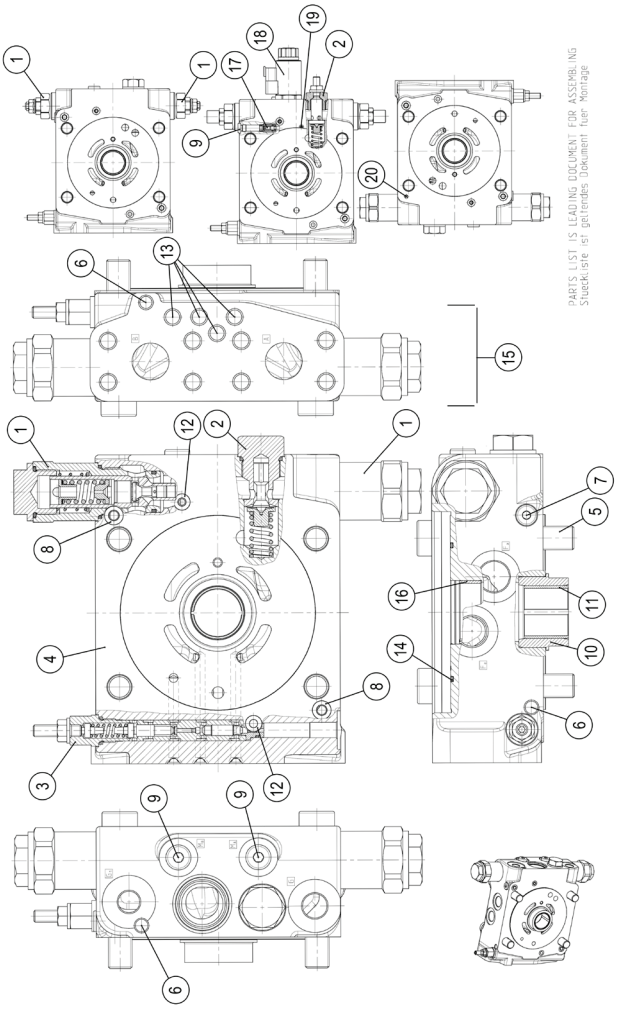

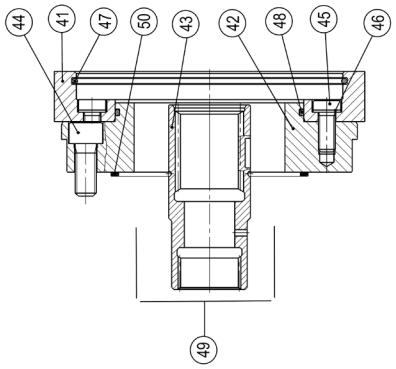

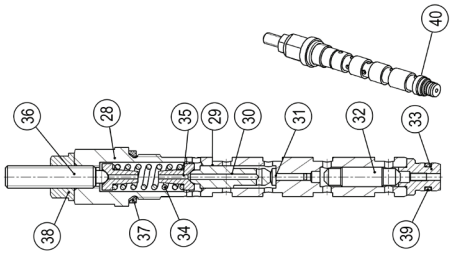

H-00232D 07/24

H100-01425 - PUMP, TRACK DRIVE - LH (VTG90)

Item	Part #	Description	Qty.
1	R902603814	DELIVERY-VALVE ASSEMBLY	2
2	R902117188	LOCKING SET	1
3	53725	CARTRIDGE, POR - AA4VTG90	1
4	R902213222	CONNECTION PLATE	1
5	R909083141	SOCKET HEAD CAP SCREW	4
6	R909831318	DOUBLE BREAK-OFF PLUG	2
7	699490	SCREW PLUG	1
8	R909085709	O-RING	2
9	699540	SCREW PLUG	2
10	R909440537	BUSHING	1
11	R902283572	BUSHING	1
12	R909086498	O-RING	2
13	R909831319	DOUBLE BREAK-OFF PLUG	2
14	56169	O-RING	1
15	R902002400	SEAL KIT	1
16	**SEE DESCRIPTION**	CALL	-
17	**SEE DESCRIPTION**	CALL	-
18	**SEE DESCRIPTION**	CALL	-
19	**SEE DESCRIPTION**	CALL	-
20	**SEE DESCRIPTION**	CALL	-
21	53724	CARTRIDGE, RELIEF - MAIN AA4VTG90	1
22	R961003396	SEAL KIT	1
23	**SEE DESCRIPTION**	CALL	-
24	R902002411	SEAL KIT	1
25	R909650430	SCREW PLUG	1
26	R909083761	O-RING	1
27	R909156494	NOZZLE	1
28	R909432161	SCREW PLUG	1
29	R909425951	VALVE BUSHING	1
30	R909432162	CONTROL PISTON	1
31	R909432163	PISTON	1
32	R909432164	VALVE SPOOL	1
33	R909436284	VALVE SEAT	1
34	R902168277	COMPRESSION SPRING	1
35	R902049851	SPRING DISK	2
36	R909432167	ADJUSTING SCREW	1
37	R909083752	O-RING	1
38	R909152707	SEALING NUT	1
39	R909086380	O-RING	1
40	R902221226	SEAL KIT	1
41	R902108263	INTERMEDIATE FLANGE	1
42	R902077596	PUMP COVER	1
43	58356	COUPLER, THRU DRIVE PUMP	1
44	R909083060	SOCKET HEAD CAP SCREW	4
45	R909083190	SOCKET HEAD CAP SCREW	8
46	R909152493	SEAL RING	8
47	19491	O-RING	1
48	55951	O-RING	1

H100-01426 - PUMP, TRACK DRIVE - LH (VTG90)

NOTE: APPLY GREASE TO O-RINGS

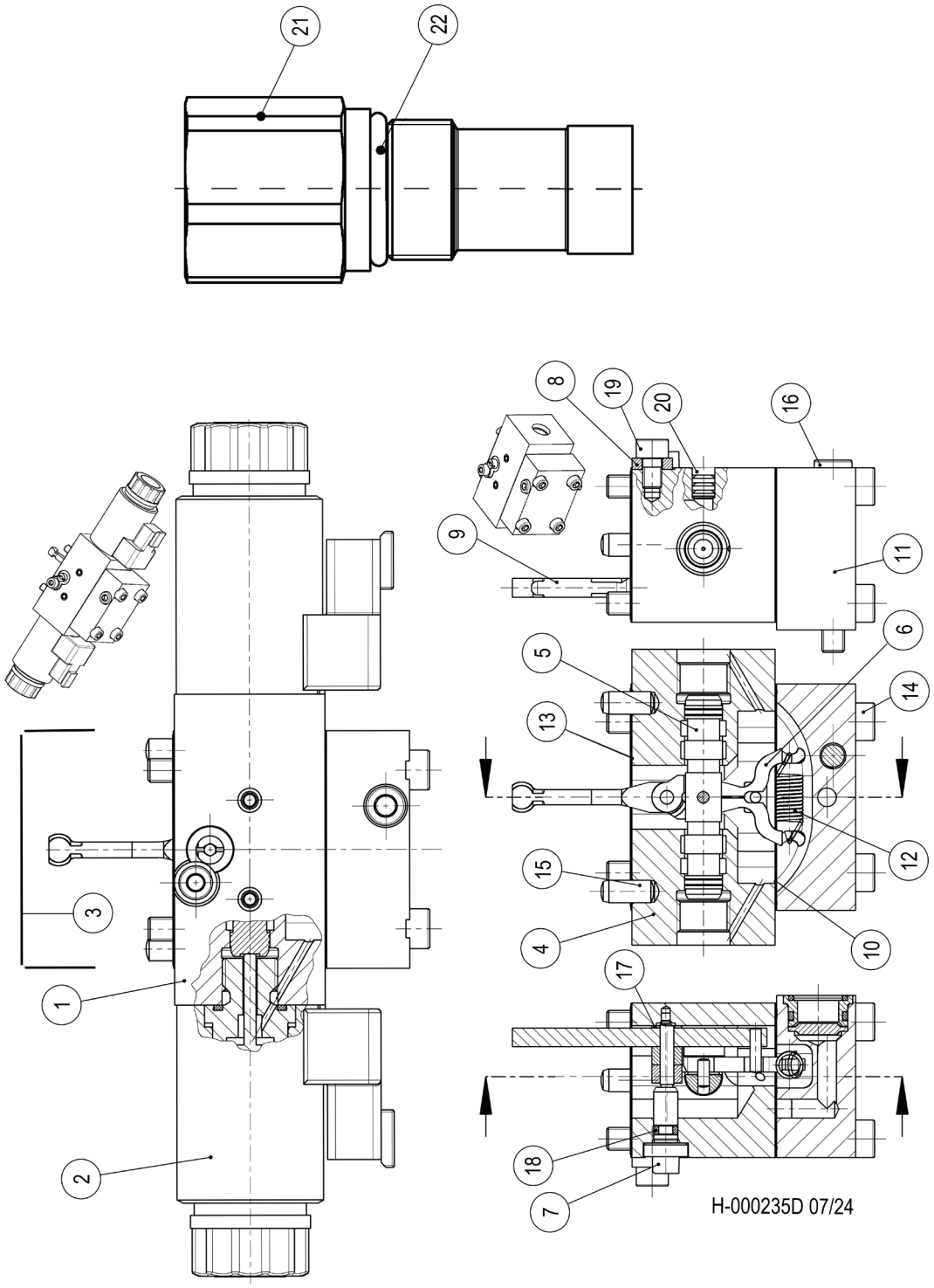

H100-01426 - PUMP, TRACK DRIVE - LH (VTG90)

Item	Part #	Description	Qty.
1	R902106746	BASIC UNIT	1
2	53730	COIL, SOLENOID W/STEM - TRACK/WHEEL PUMP	2
3	R902002395	SEAL KIT	1
4	R902254823	HOUSING ASSEMBLY GROUP	1
5	R902107090	CONTROL PISTON	1
6	R902162699	LEVER PAIR	1
7	R902236102	ECCENTRIC PIN	1
8	R902044854	WASHER	1
9	R902113672	FEEDBACK LEVER	1
10	R902603830	SEAL	1
11	R902107492	COVER	1
12	R902068150	EXTENSION SPRING	1
13	700230	GASKET	1
14	R909085831	SOCKET HEAD CAP SCREW	4
15	R913009677	STRAIGHT PIN	2
16	R909083027	SOCKET HEAD CAP SCREW	1
17	R902051252	WASHER	1
*	R902051253	WASHER	1
*	R902051254	WASHER	1
*	R902051255	WASHER	1
*	R902051256	WASHER	1
*	R902064222	WASHER	1
18	R909086301	O-RING	1
19	R902601243	SOCKET HEAD CAP SCREW	
20	**SEE DESCRIPTION**	CALL	-

H100-01430 - PUMP, TRACK DRIVE - RH (VTG90)

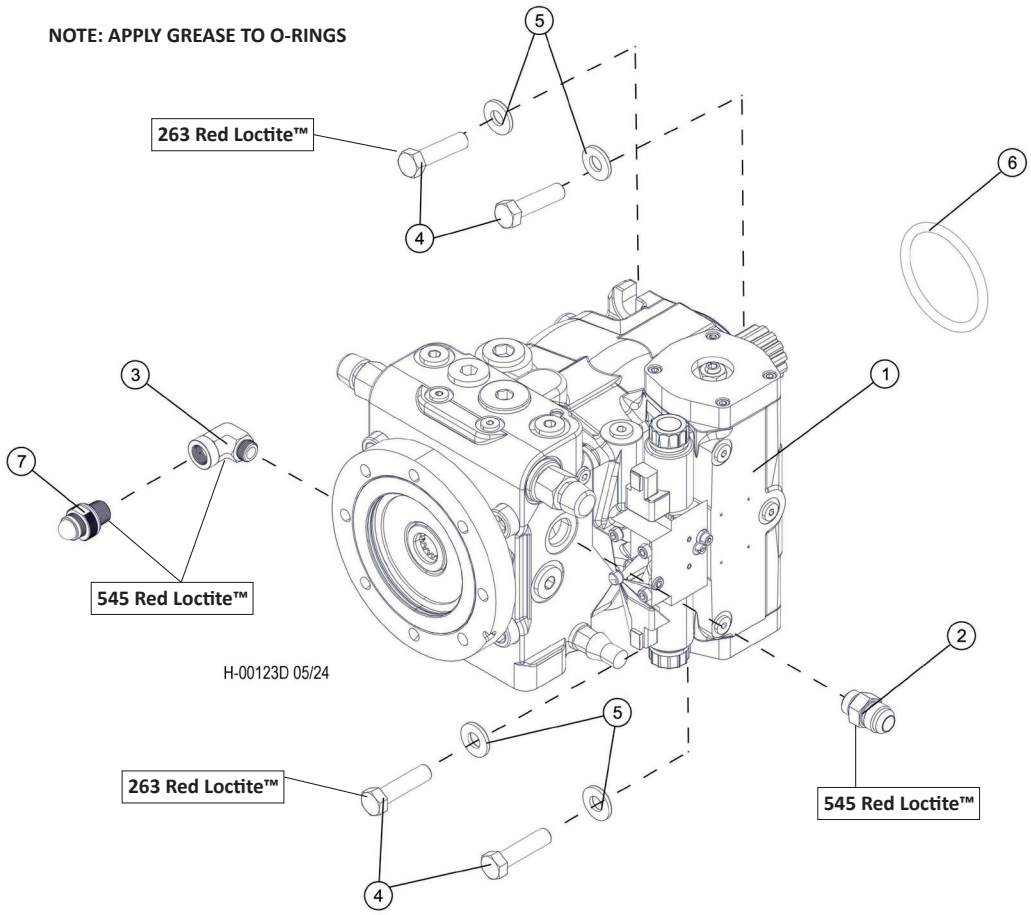

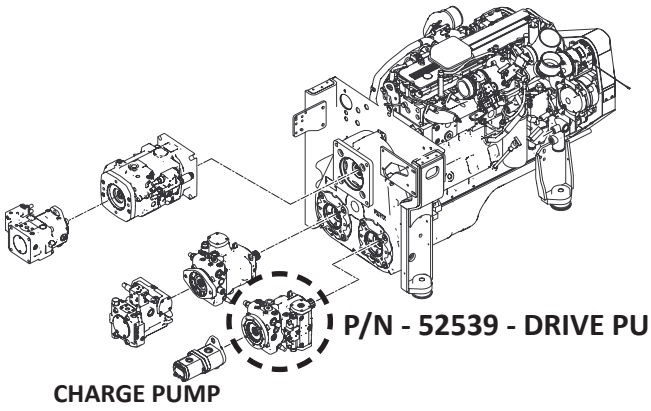

Item	Part #	Description	Qty.
1	52539	PUMP, TRACK DRIVE (RH) VTG90	1
2	15494	CONNECTOR, STR - 6400-12-10 **545 RED LOCTITE™**	1
3	57641	FITTING, EBLOW - FEMALE 4-AOEG5-S **545 RED LOCTITE™**	1
4	50100	BOLT - .5" X 1.25" **263 RED LOCTITE™**	4
5	15534	WASHER, SAE FLAT - .5"	4
6	53718	ORING, TRACK DRIVE PUMP PILOT	1
7	57819	TAP, GAUGE PORT - #4 SAE ORING BOSS- ST **545 RED LOCTITE™**	1

H100-01431 - PUMP, TRACK DRIVE - RH (VTG90)

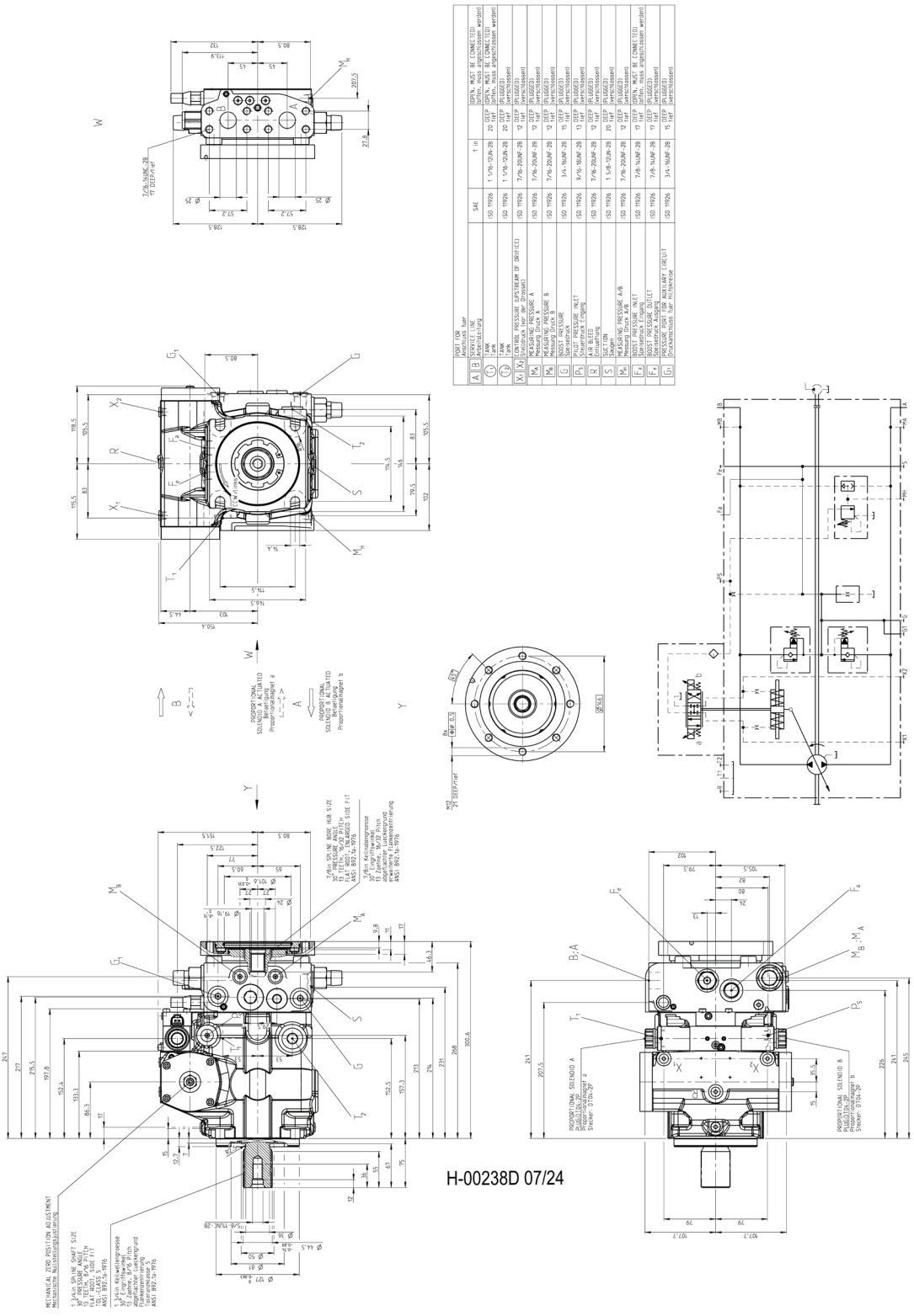

H-00238D 07/24

H100-01431 - PUMP, TRACK DRIVE - RH (VTG90)

Item	Part #	Description	Qty.
1	R902199506	ROTARY GROUP	1
2	R902009059	CONTROL	1
3	R902131396	CONNECTION PLATE	1
4	56336	THRU DRIVE SAE-B A4VTG90	1
5	53729	VALVE, STROKE CONTROL - AA4VG90 24V	1
6	R902131389	HOUSING	1
7	R902114380	PIVOT PIN	2
8	R909405732	POITIONING PIN	1
9	R909154480	SCREW PLUG	1
10	R909153371	SCREW PLUG	1
11	699540	NUT, LOCKING	4
12	R909083228	SCREW PLUG	1
13	R909086731	O-RING	1
14	R909083490	SETSCREW	2
15	R909831318	DOUBLE BREAK-OFF PLUG	1
16	R909156495	NOZZLE	2
17	R913016373	SLOTTED SPRING PIN	2
18	699490	PLUG, PORT - FOR A25FW	2
19	R909153339	SCREW PLUG	1
20	R909153418	SCREW PLUG	1
21	R909153330	O-RING	1
22	R909153338	SCREW PLUG	2
23	R909156495	NOZZLE	1
24	R902012117	THREADED PART	1

H100-01432 - PUMP, TRACK DRIVE - RH (VTG90)

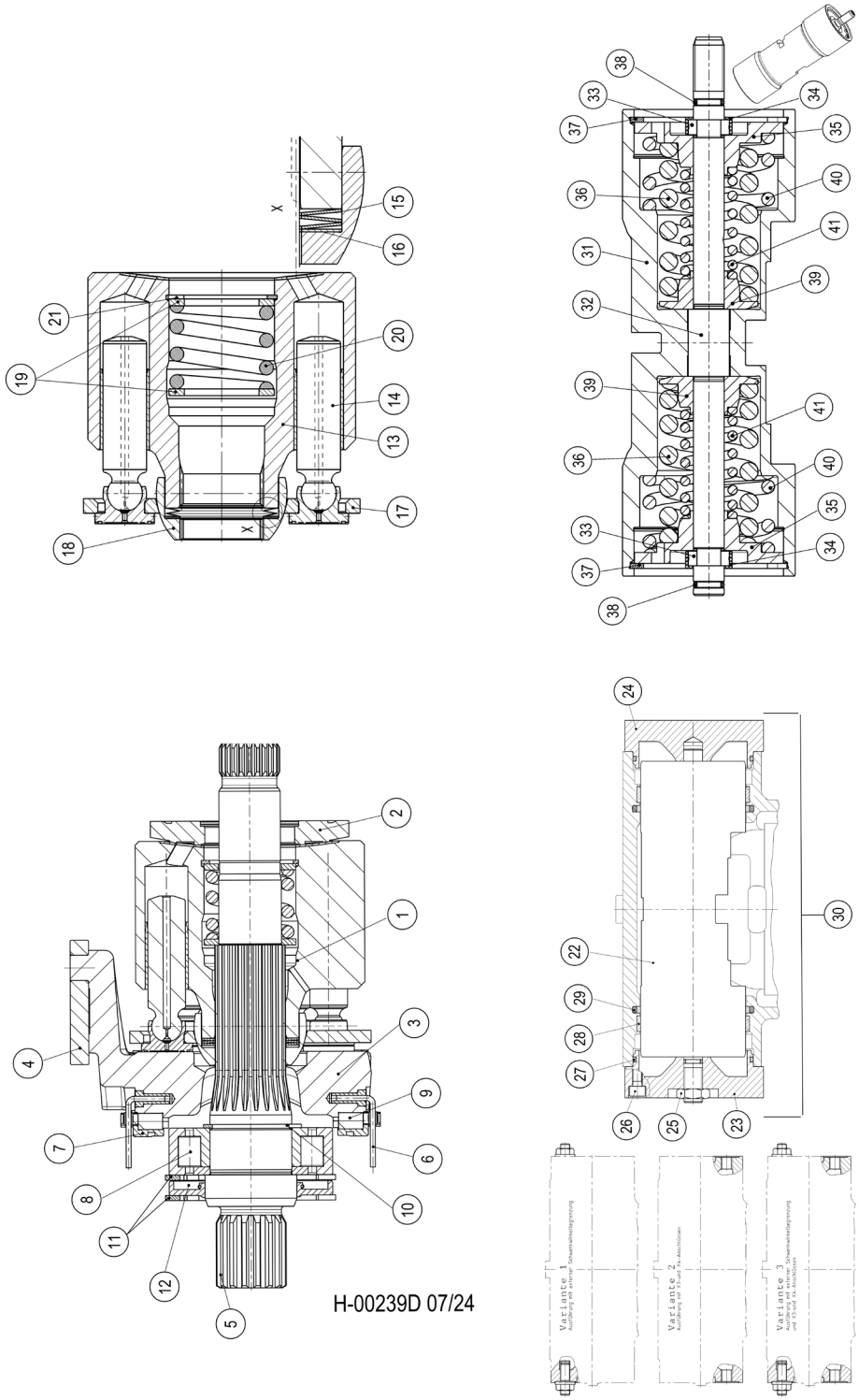

H100-01432 - PUMP, TRACK DRIVE - RH (VTG90)

Item	Part #	Description	Qty.
1	56333	ROTARY GROUP	1
2	R902195224	CONTROL PLATE, LEFT-HAND ROTATION	1
3	R902283514	CRADLE	1
4	R909449810	SLIDER	1
5	R909921550	DRIVE SHAFT	1
6	R902188337	WIRE	2
7	R913054564	BEARING SHELL PAIR	1
8	R909153104	CYL. ROLLER BEARING	1
9	R909830165	CAGE PAIR	1
10	56106	RETAINING RING	1
11	53726	RING, SNAP - SHAFT SEAL (AA4VG90)	2
12	53727	SEAL, SHAFT - TRACK DRIVE PUMP (AA4VG90)	1
13	R902252004	CYLINDER	1
14	R909414515	PISTON PAD	9
15	R902192958	CUP-SPRING STACK	1
16	R909432983	SHIM RING	1
*	R909432984	SHIM RING	1
*	R909432985	SHIM RING	1
*	R909432986	SHIM RING	1
17	R902205455	RETAINING PLATE	1
18	R902136991	RETAINING BALL	1
19	R909449885	WASHER	2
20	R909435649	COMPRESSION SPRING	1

H100-01433 - PUMP, TRACK DRIVE - RH (VTG90)

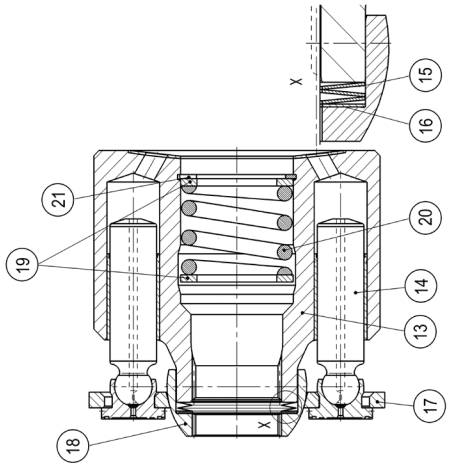

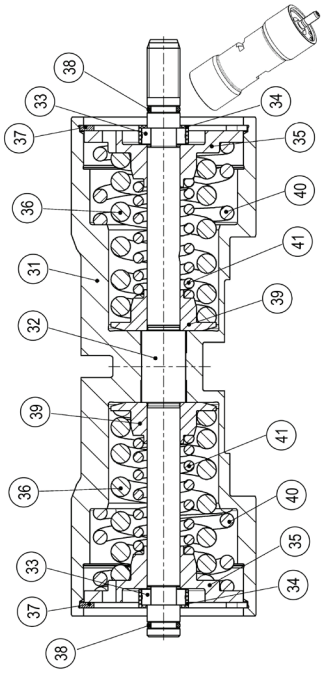

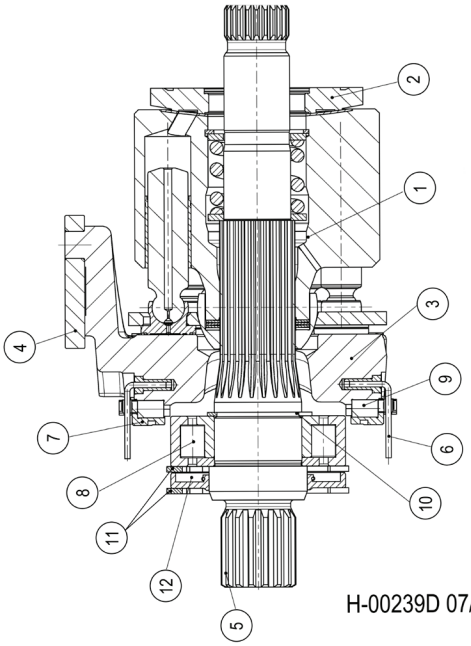

H-00239D 07/24

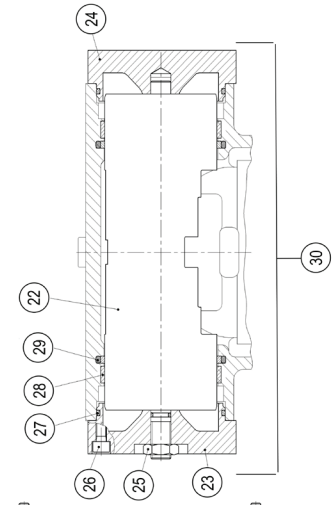

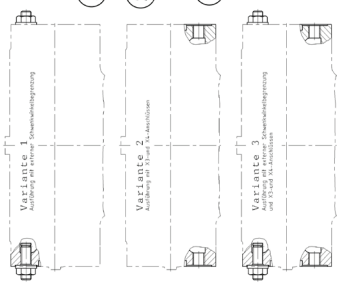

H100-01433 - PUMP, TRACK DRIVE - RH (VTG90)

Item	Part #	Description	Qty.
21	R909084556	RETAINING RING	1
22	R902020313	POSITIONING PISTON	1
23	R902004827	COVER	1
24	R902004873	COVER	1
25	R909154918	HEXAGON NUT	1
26	R909084744	SOCKET HEAD CAP SCREW	8
27	R909084482	O-RING	2
28	R902600837	ROD GUIDANCE RING	2
29	R902600196	ROD SEAL	2
30	R902002372	SEAL KIT	1
31	R902192998	POSITIONING PISTON	1
32	R902278029	ROD	1
33	R902013493	RING	2
*	R902015508	RING	2
*	R902015509	RING	2
*	R902015510	RING	2
*	R902015511	RING	2
*	R902015512	RING	2
*	R902015513	RING	2
*	R902015514	RING	2
34	R902600489	LOCATING RING	2
35	R902020101	SPRING DISK	2
36	R909432979	COMPRESSION SPRING	2
37	R902280445	RETAINING RING	2
38	R909085709	O-RING	1
39	R909449248	SPRING DISK	2
40	**SEE DESCRIPTION**	CALL	1
41	**SEE DESCRIPTION**	CALL	1

H100-01434 - PUMP, TRACK DRIVE - RH (VTG90)

NOTE: APPLY GREASE TO O-RINGS

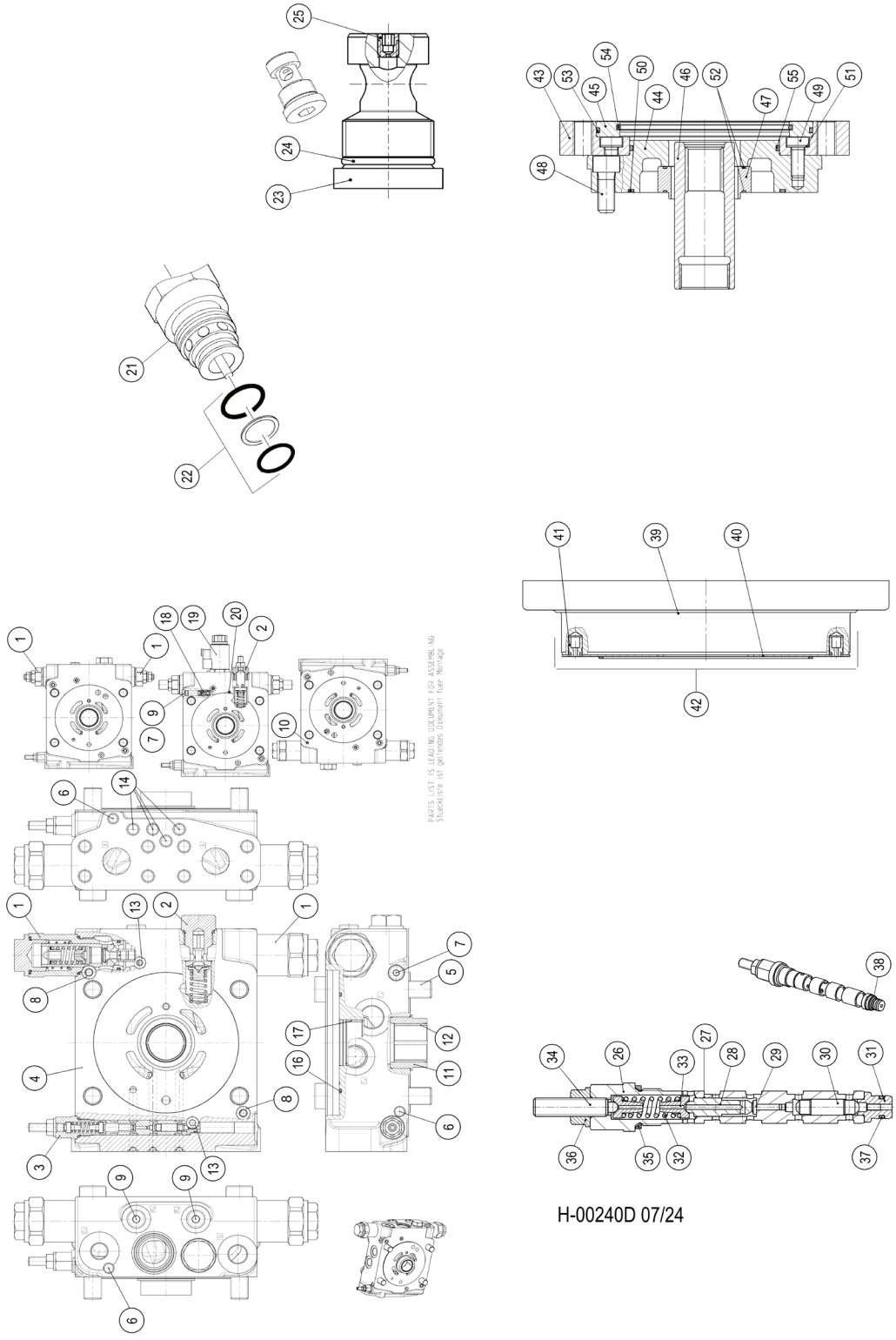

H-00240D 07/24

H100-01434 - PUMP, TRACK DRIVE - RH (VTG90)

Item	Part #	Description	Qty.
1	R902603814	DELIVERY-VALVE ASSEMBLY	2
2	R902117188	LOCKING SET	1
3	53725	CARTRIDGE, POR - AA4VTG90	1
4	R902131398	CONNECTION PLATE	1
5	R909083141	SOCKET HEAD CAP SCREW	4
6	R909831318	DOUBLE BREAK-OFF PLUG	2
7	699490	PLUG, PORT - FOR A25FW	1
8	R909085709	O-RING	2
9	699540	NUT, LOCKING	2
10	R902603506	SLOTTED SPRING PIN	1
11	R909440537	BUSHING	1
12	R902283572	BUSHING	1
13	R909086498	O-RING	2
14	R909831319	DOUBLE BREAK-OFF PLUG	2
15	56169	ORING, THRU-DRIVE - 55458 TRACK PUMP	1
16	R902002400	SEAL KIT	1
17	**SEE DESCRIPTION**	CALL	-
18	**SEE DESCRIPTION**	CALL	-
19	**SEE DESCRIPTION**	CALL	-
20	**SEE DESCRIPTION**	CALL	-
21	53724	CARTRIDGE, RELIEF - MAIN AA4VTG90	1
22	R961003396	SEAL KIT	1
23	R909650430	SCREW PLUG	1
24	R909083761	O-RING	1
25	R909156494	NOZZLE	1

H100-01435 - PUMP, TRACK DRIVE - RH (VTG90)

NOTE: APPLY GREASE TO O-RINGS

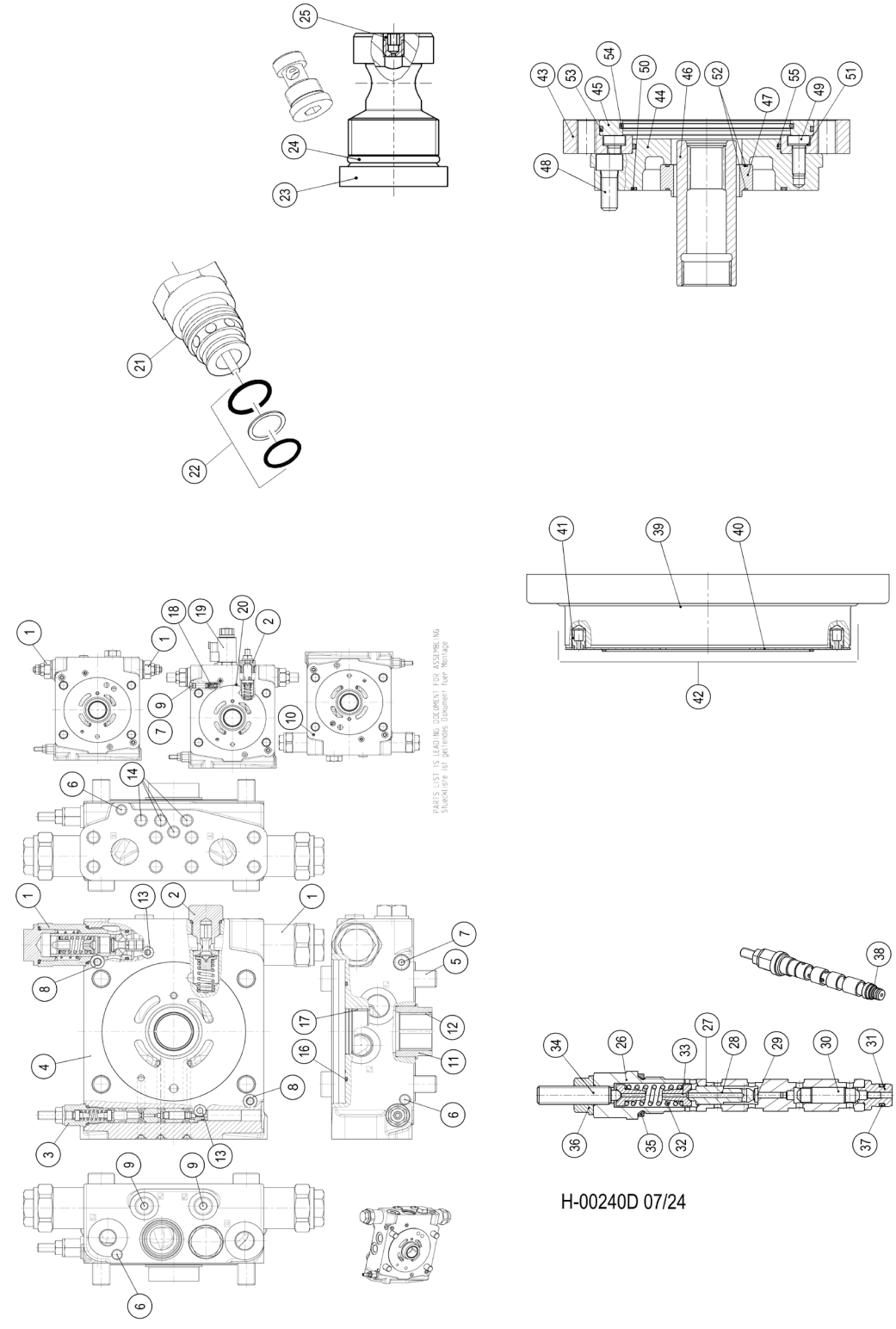

H-00240D 07/24

H100-01435 - PUMP, TRACK DRIVE - RH (VTG90)

Item	Part #	Description	Qty.
26	R909432161	SCREW PLUG	1
27	R909425951	VALVE BUSHING	1
28	R909432162	CONTROL PISTON	1
29	R909432163	PISTON	1
30	R909432164	VALVE SPOOL	1
31	R909436284	VALVE SEAT	1
32	R902168277	COMPRESSION SPRING	1
33	R902049851	SPRING DISK	2
34	R909432167	ADJUSTING SCREW	1
35	R909083752	O-RING	1
36	R909152707	SEALING NUT	1
37	R909086380	O-RING	1
38	R902221226	SEAL KIT	1
39	R902079044	BELL HOUSING	1
40	R902278082	WEAR PLATE	1
41	R913007069	HOLDING PLUG	2
42	R902002412	SEAL KIT	1
43	R909444589	FLANGE	1
44	R902077958	HOUSING	1
45	R909431554	LOCATING RING	1
46	R902084926	THROUGH DRIVE COUPLING	1
47	R909430651	SEAL RING	1
48	R909083060	SOCKET HEAD CAP SCREW	4
49	R909083189	SOCKET HEAD CAP SCREW	6
50	56169	ORING, THRU-DRIVE - 55458 TRACK PUMP	1
51	R909152493	SEAL RING	6
52	55950	O-RING	2
53	R909085363	O-RING	1
54	20373	O-RING, CHARGE PUMP PILOT (AA4VG125)	1
55	R909085360	O-RING	1

H100-01436 - PUMP, TRACK DRIVE - RH (VTG90)

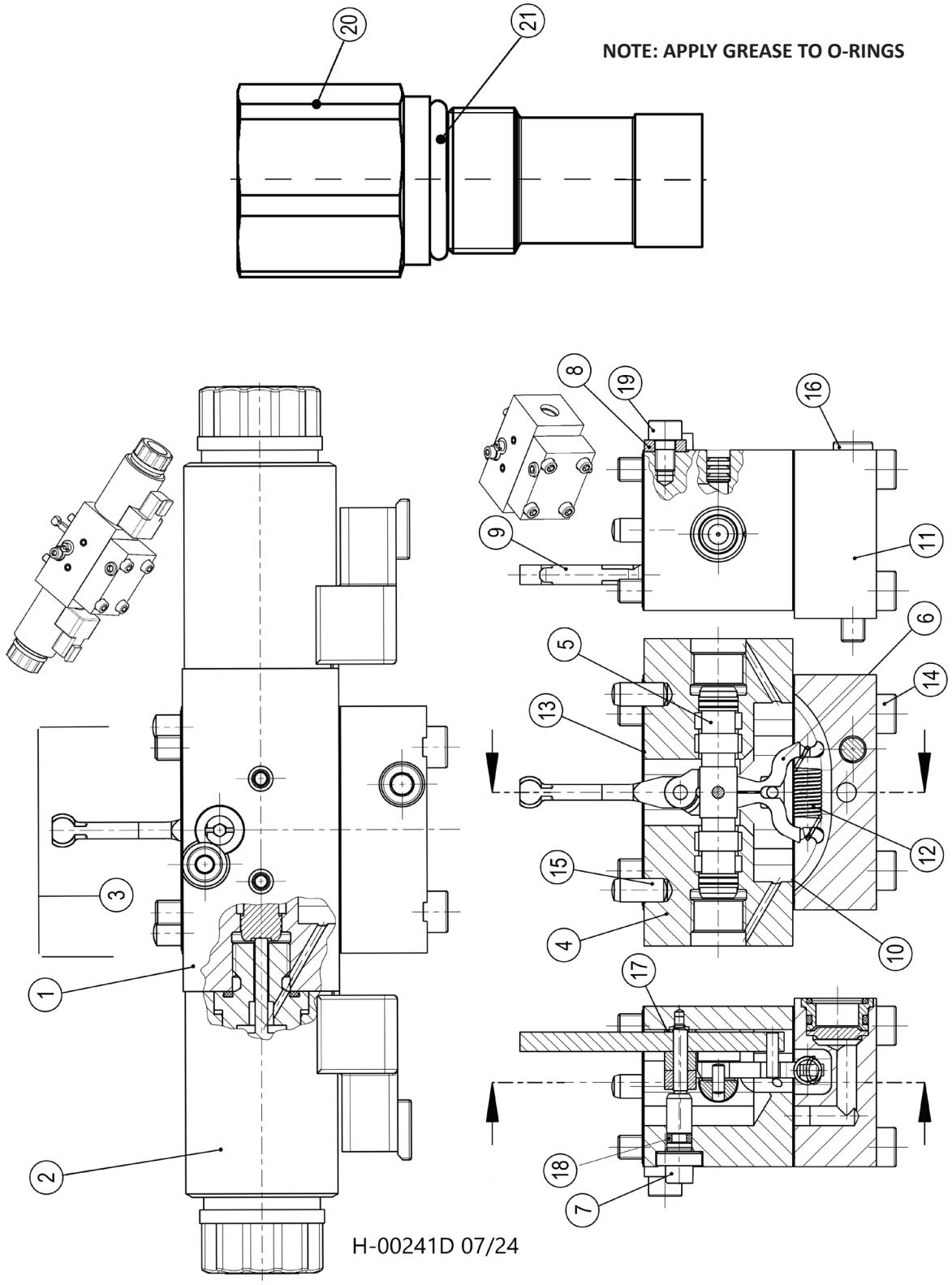

H100-01436 - PUMP, TRACK DRIVE - RH (VTG90)

Item	Part #	Description	Qty.
1	R902106746	BASIC UNIT	1
2	53730	COIL, SOLENOID W/STEM - TRACK/WHEEL PUMP	1
3	R902002395	SEAL KIT	1
4	R902254823	HOUSING ASSEMBLY GROUP	1
5	R902107090	CONTROL PISTON	1
6	R902162699	LEVER PAIR	1
7	R902236102	ECCENTRIC PIN	1
8	R902044854	WASHER	1
9	R902113672	FEEDBACK LEVER	1
10	R902603830	SEAL	1
11	R902107492	COVER	1
12	R902068150	EXTENSION SPRING	1
13	700230	GASKET	1
14	R909085831	SOCKET HEAD CAP SCREW	4
15	R913009677	STRAIGHT PIN	2
16	R909083027	SOCKET HEAD CAP SCREW	1
17	R902051252	WASHER	1
*	R902051253	WASHER	1
*	R902051254	WASHER	1
*	R902051255	WASHER	1
*	R902051256	WASHER	1
*	R902064222	WASHER	1
18	R909086301	O-RING	1
19	R902601243	O-RING	1
20	R902012092	LOCKING PIECE	1
21	R909083758	O-RING	1

H100-01440 - PUMP, TRACK DRIVE COMPONENTS (VTG90)

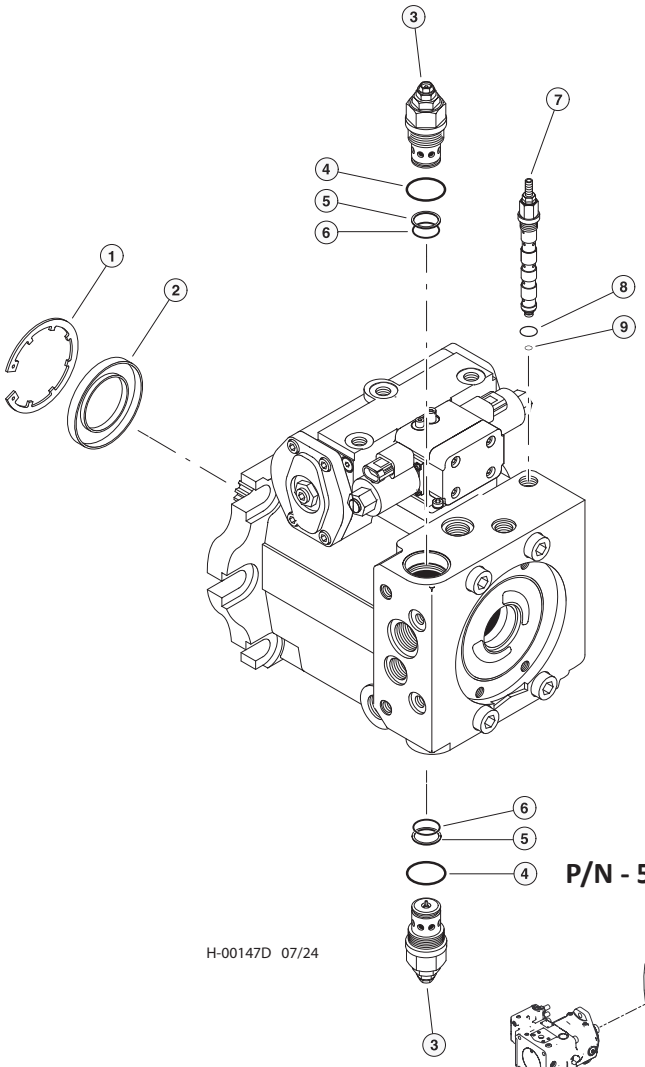

NOTE: APPLY GREASE TO O-RINGS

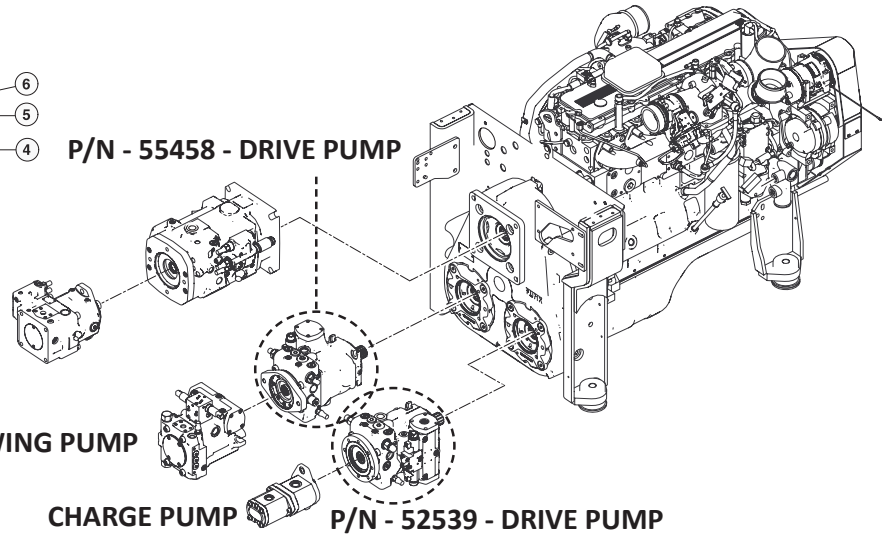

Item	Part #	Description	Qty.
	55458	PUMP, TRACK DRIVE - (LH) VTG90	1
	52539	PUMP, TRACK DRIVE - (RH) VTG90	1
1	53726	RING, SEAL RETAINING	1
2	53727	SEAL, SHAFT	1
3	53724	CARTRIDGE, HIGH PRESSURE RELIEF VALVE	2
4	**SEE DESCRIPTION**	O-RING, HPRV CARTRIDGE (BODY) **(CALL)**	2
5	**SEE DESCRIPTION**	RING, BACK-UP - HPRV CARTRIDGE (CHAMBER) **(CALL)**	5
6	**SEE DESCRIPTION**	O-RING, HPRV CARTRIDGE (CHAMBER) **(CALL)**	2
7	53725	CARTRIDGE, POR RELIEF VALVE	1
8	**SEE DESCRIPTION**	O-RING, POR RELIEF VALVE CARTRIDGE (BODY) **(CALL)**	1
9	**SEE DESCRIPTION**	O-RING, POR RELIEF VALVE CARTRIDGE (CHAMBER) **(CALL)**	1
	53640	KIT, SEAL REPAIR -TRACK DRIVE PUMP-VTG90	1

H100-01441 - PUMP, TRACK DRIVE COMPONENTS (VTG90)

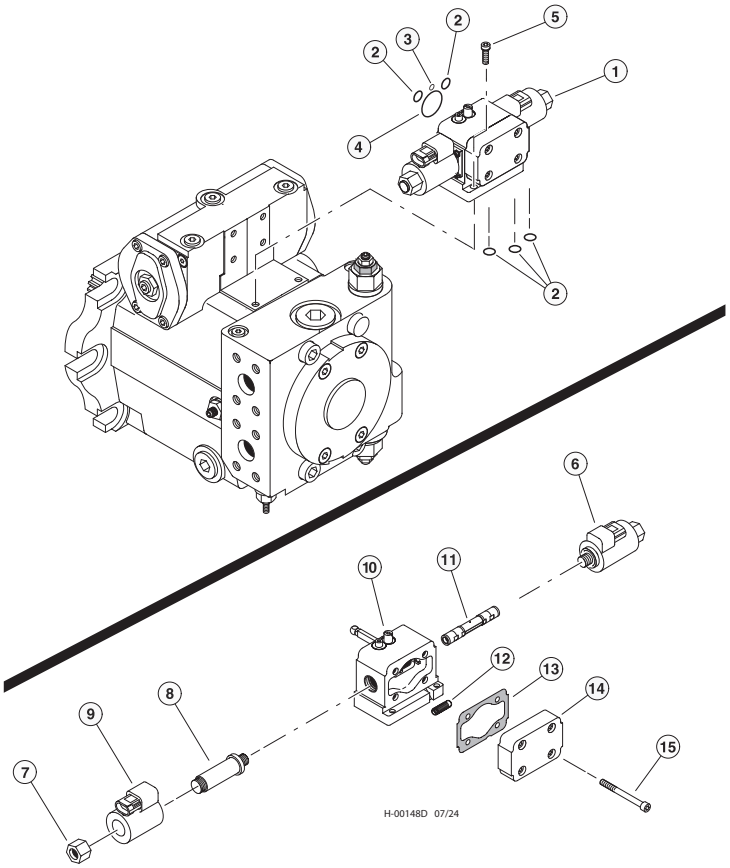

NOTE: APPLY GREASE TO O-RINGS

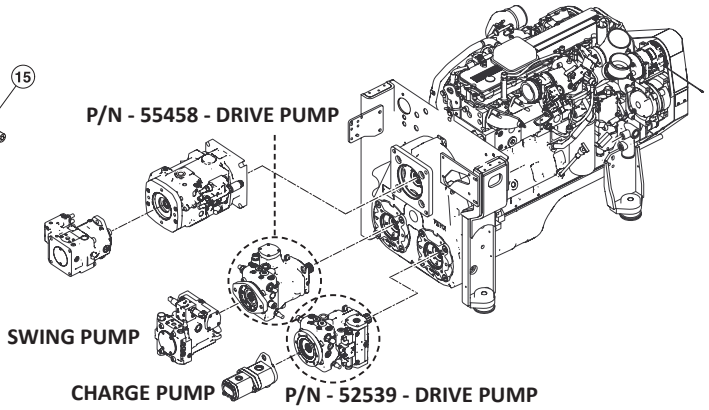

Item	Part #	Description	Qty.
	55458	PUMP, TRACK DRIVE - (LH) VTG90	1
1	**SEE DESCRIPTION**	O-RING **(CALL)**	1
2	**SEE DESCRIPTION**	SEAL RING **(CALL)**	1
3	**SEE DESCRIPTION**	O-RING **(CALL)**	1
4	21624	O-RING, CHARGE PUMP PILOT (AA4VG90)	1
5	**SEE DESCRIPTION**	COVER, PUMP AA4VG90 **(CALL)**	1
6	57807	ORING, THRU-DRIVE 52539 POS 1	1
7	**SEE DESCRIPTION**	BOLT **263 RED LOCTITE™ (CALL)**	4
8	**SEE DESCRIPTION**	FLANGE, INTERMEDIATE	1
9	**SEE DESCRIPTION**	BOLT **263 RED LOCTITE™ (CALL)**	6
10	57808	ORING, THRU-DRIVE 52539 POS 2	1
11	**SEE DESCRIPTION**	RING, CENTERING **(CALL)**	1
12	57809	ORING, THRU-DRIVE 52539 POS 3	1
13	18414	COVER, THRU DRIVE - REXROTH	1
14	18040	WASHER, FLAT - .5”	2
15	10733	BOLT - .5” X 1” **263 RED LOCTITE™**	2
*	53640	KIT, SEAL REPAIR -TRACK DRIVE PUMP - VTG90R909830978	1

H100-01442 - PUMP, TRACK DRIVE COMPONENTS (VTG90)

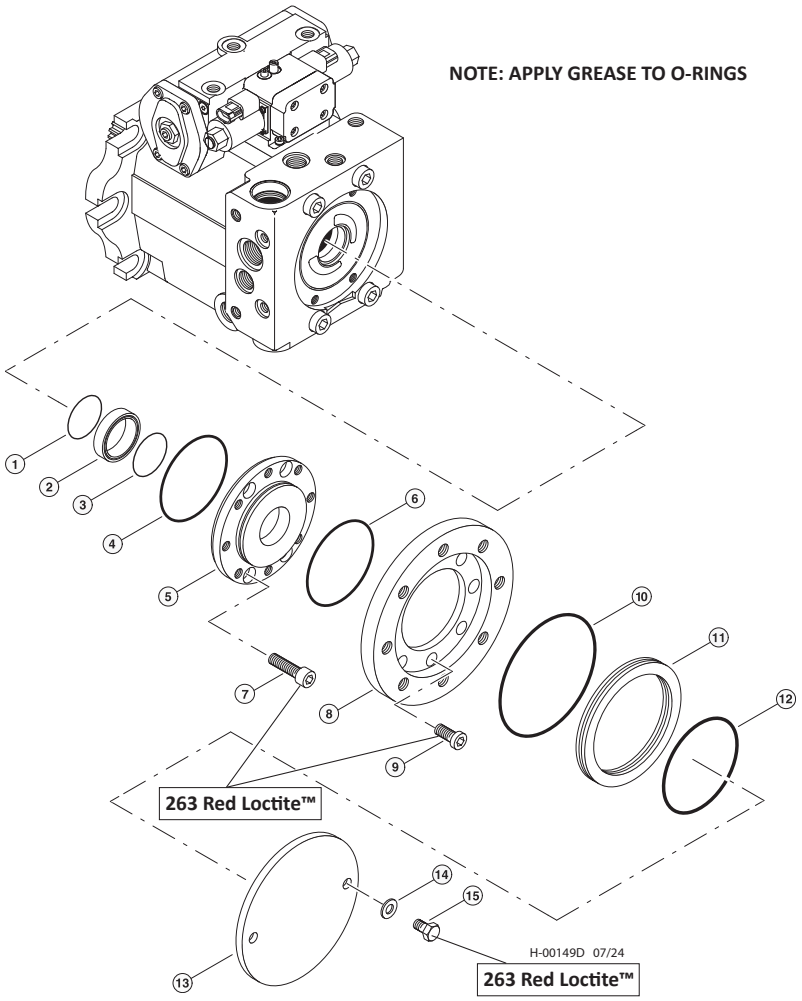

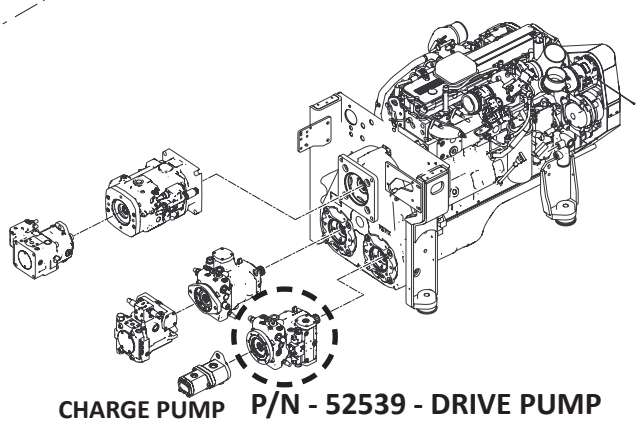

CHARGE PUMP **P/N - 52539 - DRIVE PUMP**

Item	Part #	Description	Qty.
	52539	PUMP, TRACK DRIVE - (RH) VTG90	1
1	**SEE DESCRIPTION**	O-RING **(CALL)**	1
2	**SEE DESCRIPTION**	SEAL RING **(CALL)**	1
3	**SEE DESCRIPTION**	O-RING **(CALL)**	1
4	21624	O-RING, CHARGE PUMP PILOT (AA4VG90)	1
5	**CALL**	COVER, PUMP AA4VG90 **(CALL)**	1
6	57807	ORING, THRU-DRIVE 52539 POS 1	1
7	**SEE DESCRIPTION**	BOLT **263 RED LOCTITE™ (CALL)**	4
8	**SEE DESCRIPTION**	FLANGE, INTERMEDIATE **(CALL)**	1
9	**SEE DESCRIPTION**	BOLT **263 RED LOCTITE™ (CALL)**	6
10	57808	ORING, THRU-DRIVE 52539 POS 2	1
11	**SEE DESCRIPTION**	RING, CENTERING **(CALL)**	1
12	57809	ORING, THRU-DRIVE 52539 POS 3	1
13	18414	COVER, THRU DRIVE - REXROTH	1
14	18040	WASHER, FLAT - .5”	2
15	10733	BOLT - .5” X 1” **263 RED LOCTITE™**	2
*	53640	KIT, SEAL REPAIR -TRACK DRIVE PUMP - VTG90R909830978	1

H100-01443 - PUMP, TRACK DRIVE COMPONENTS (VTG90)

NOTE: APPLY GREASE TO O-RINGS

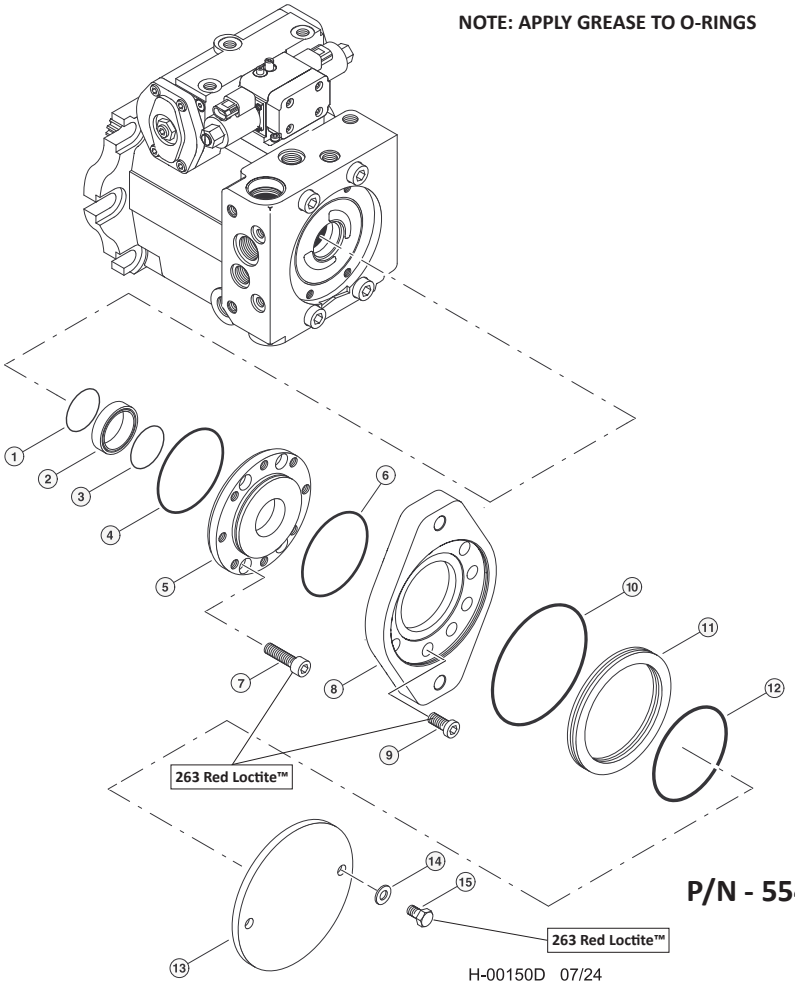

H-00150D 07/24

P/N - 55458 - DRIVE PUMP

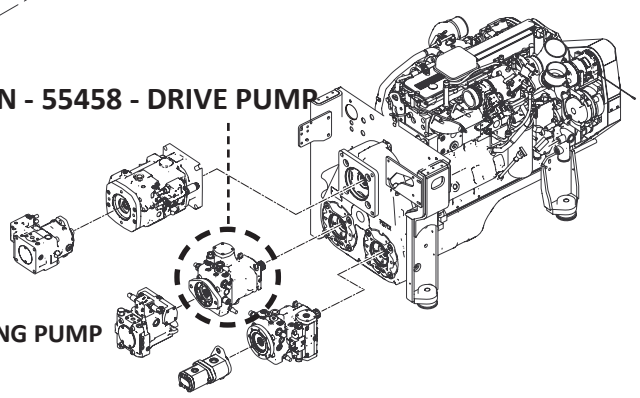

SWING PUMP

Item	Part #	Description	Qty.
	55458	PUMP, TRACK DRIVE - (LH) VTG90	1
1	**SEE DESCRIPTION**	O-RING **(CALL)**	1
2	**SEE DESCRIPTION**	SEAL RING **(CALL)**	1
3	**SEE DESCRIPTION**	O-RING **(CALL)**	1
4	21624	O-RING, CHARGE PUMP PILOT (AA4VG90)	1
5	**SEE DESCRIPTION**	COVER, PUMP AA4VG90 **(CALL)**	1
6	57807	ORING, THRU-DRIVE 52539 POS 1	1
7	**SEE DESCRIPTION**	BOLT **263 RED LOCTITE™ (CALL)**	4
8	**SEE DESCRIPTION**	FLANGE, INTERMEDIATE	1
9	**SEE DESCRIPTION**	BOLT **263 RED LOCTITE™ (CALL)**	6
10	57808	ORING, THRU-DRIVE 52539 POS 2	1
11	**SEE DESCRIPTION**	RING, CENTERING **(CALL)**	1
12	57809	ORING, THRU-DRIVE 52539 POS 3	1
13	18414	COVER, THRU DRIVE - REXROTH	1
14	18040	WASHER, FLAT - .5”	2
15	10733	BOLT - .5” X 1” **263 RED LOCTITE™**	2
*	53640	KIT, SEAL REPAIR -TRACK DRIVE PUMP - VTG90R909830978	1

H100-01450 - SWING PUMP

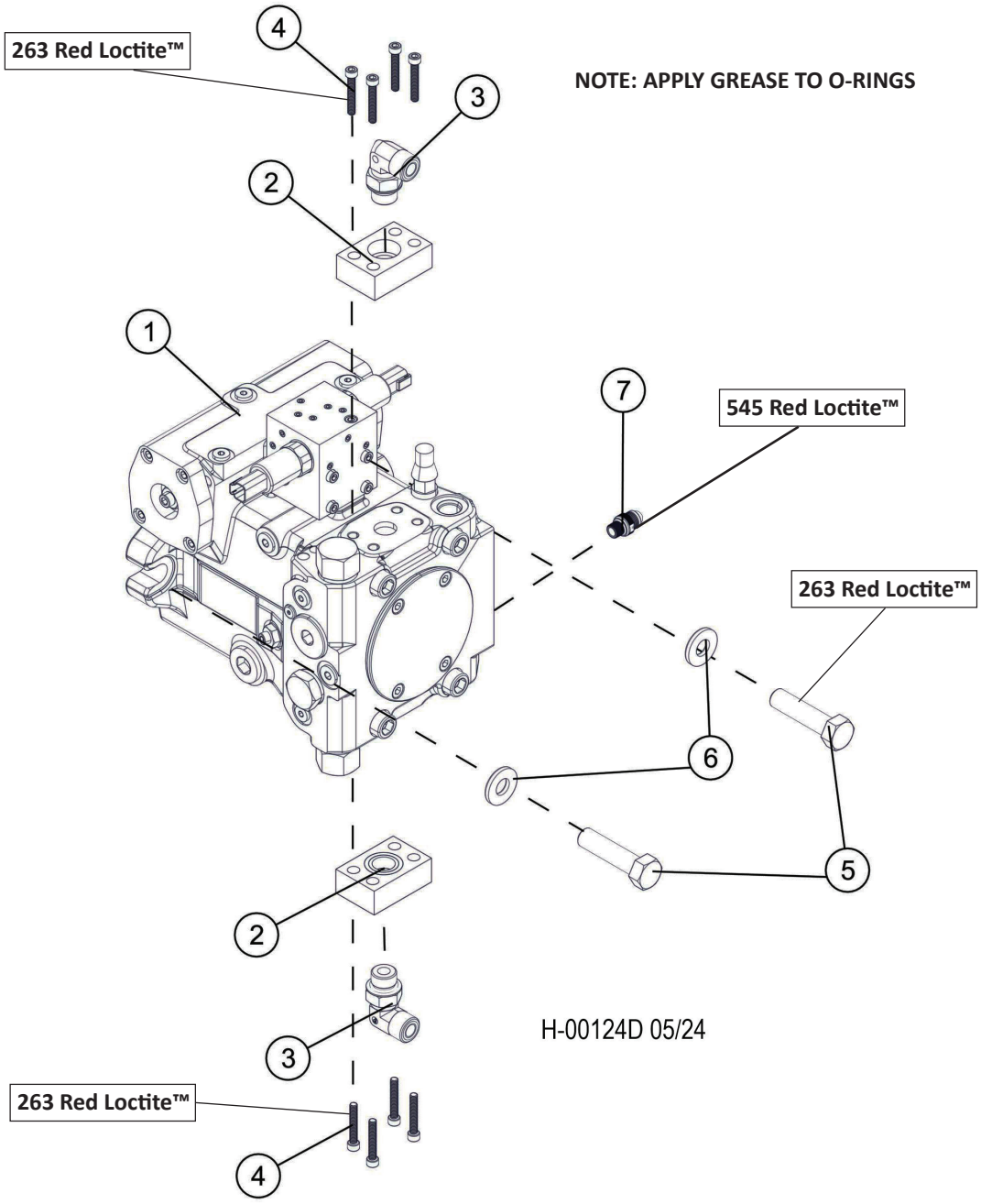

Item	Part #	Description	Qty.
1	54560	PUMP, SWING (735/755/830)	1
2	19808	CONNECTOR, FLANGE PAD -FP62-12-12ORB-MK	2
3	17688	ELBOW, 90 - FF1868T-1212S	2
4	58399	BOLT - 3/8-16x1.5, SHC **263 RED LOCTITE™**	8
5	18928	BOLT - 16MM-2.0P X 45MM **263 RED LOCTITE™**	2
6	65468	WASHER, FLAT - 16MM	2
7	57819	TAP, GAUGE PORT - #4 SAE ORING BOSS- ST **545 RED LOCTITE™**	1

H100-01451 - SWING PUMP COMPONENTS

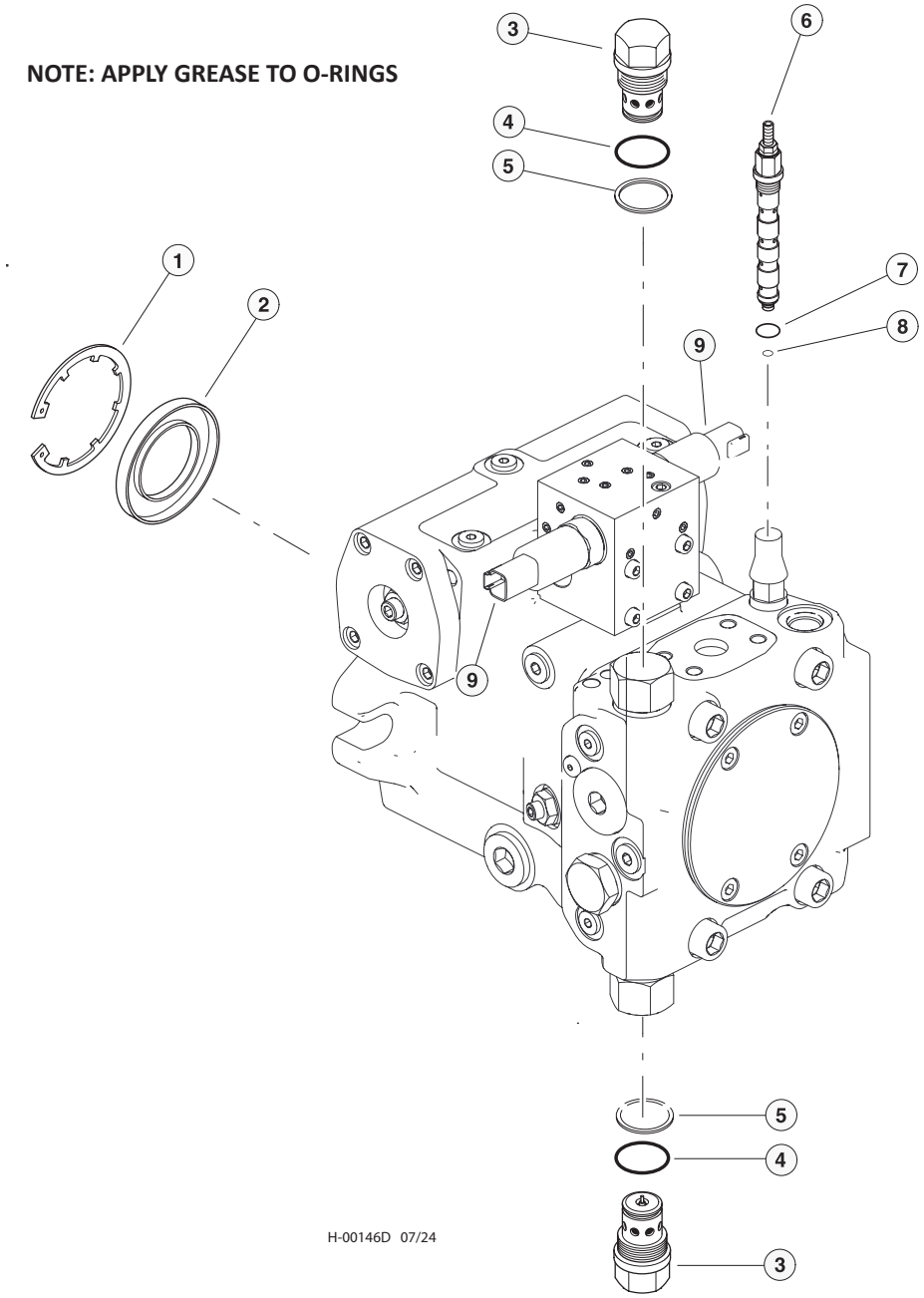

Item	Part #	Description	Qty.
	54560	PUMP, SWING (735/755/830)	1
1	**SEE DESCRIPTION**	RETAINING RING **(CALL)**	1
2	57704	SHAFT SEAL RING	1
3	**SEE DESCRIPTION**	PRESSURE RELIEF VALVE **(CALL)**	2
4	**SEE DESCRIPTION**	BACK-UP RING **(CALL)**	2
5	**SEE DESCRIPTION**	BACK-UP RING **(CALL)**	2
6	**SEE DESCRIPTION**	PRESSURE OVERRIDE VALVE	1
7	**SEE DESCRIPTION**	O-RING **(CALL)**	1

H100-01452 - SWING PUMP COMPONENTS

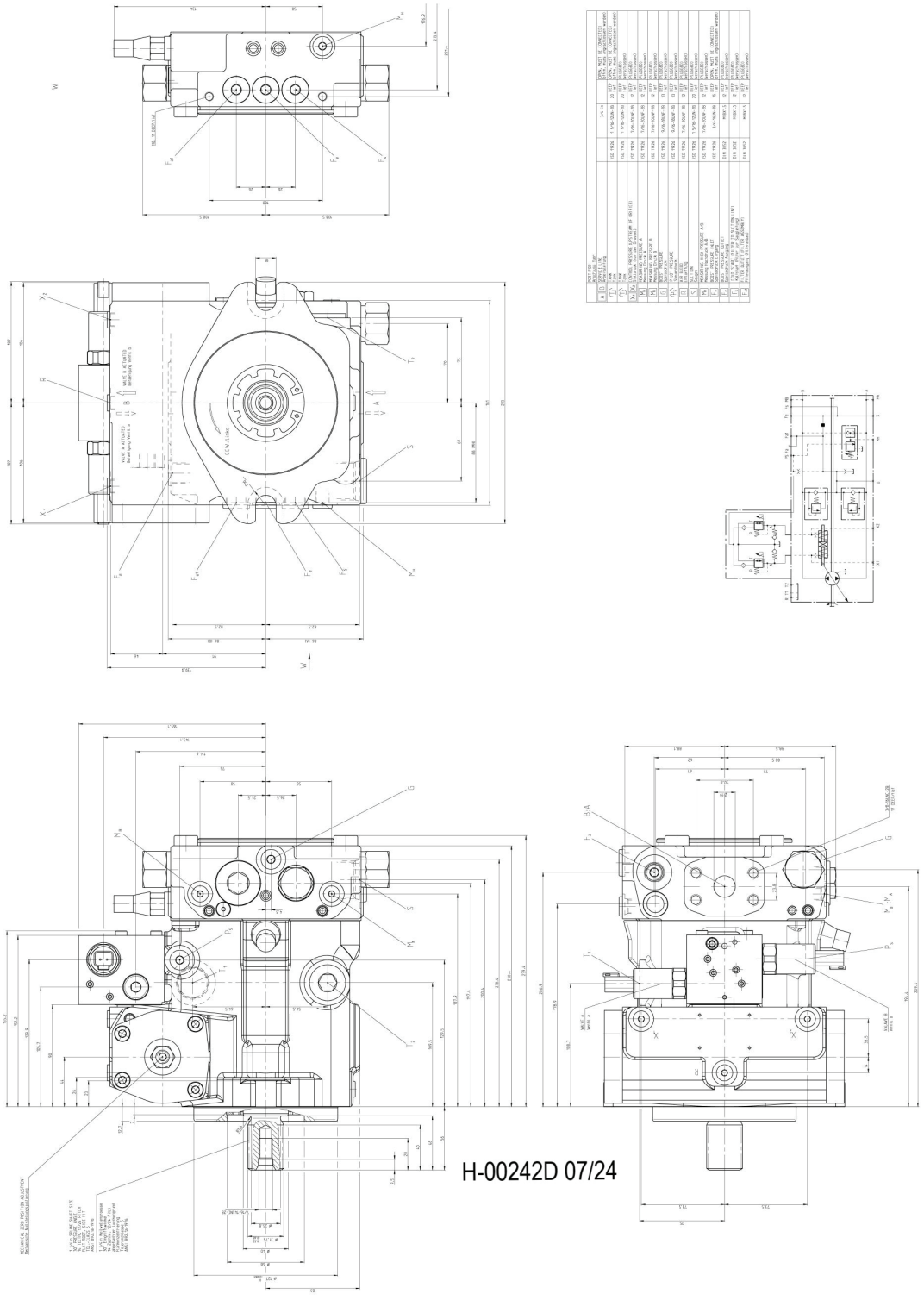

H-00242D 07/24

H100-01452 - SWING PUMP COMPONENTS

Item	Part #	Description	Qty.
1	R909607708	ROTARY GROUP	1
2	R902008624	CONTROL	1
3	R902219636	CONNECTION PLATE	1
4	R902064015	PUMP COVER	1
5	R902115257	CONTROL MODULE	1
6	R902029575	HOUSING	1
7	R902132713	PIVOT PIN	1
8	R909154480	SCREW PLUG	1
9	R909153371	SCREW PLUG	2
10	699540	NUT, LOCKING	4
11	R909153815	SCREW PLUG	3
12	R909083228	SCREW PLUG	1
13	R909086731	O-RING	1
14	R909153572	SCREW PLUG	1
15	R909831318	DOUBLE BREAK-OFF PLUG	2
16	R909156495	NOZZLE	2
17	R913016373	SLOTTED SPRING PIN	2
18	699490	PLUG, PORT - FOR A25FW	1
19	R909087912	SCREW PLUG	1
20	R909153378	SCREW PLUG	1
21	R909435856	ECCENTRIC SCREW	1
22	R909153271	SEALING NUT	1
23	R909156497	NOZZLE	1

H100-01453 - SWING PUMP COMPONENTS

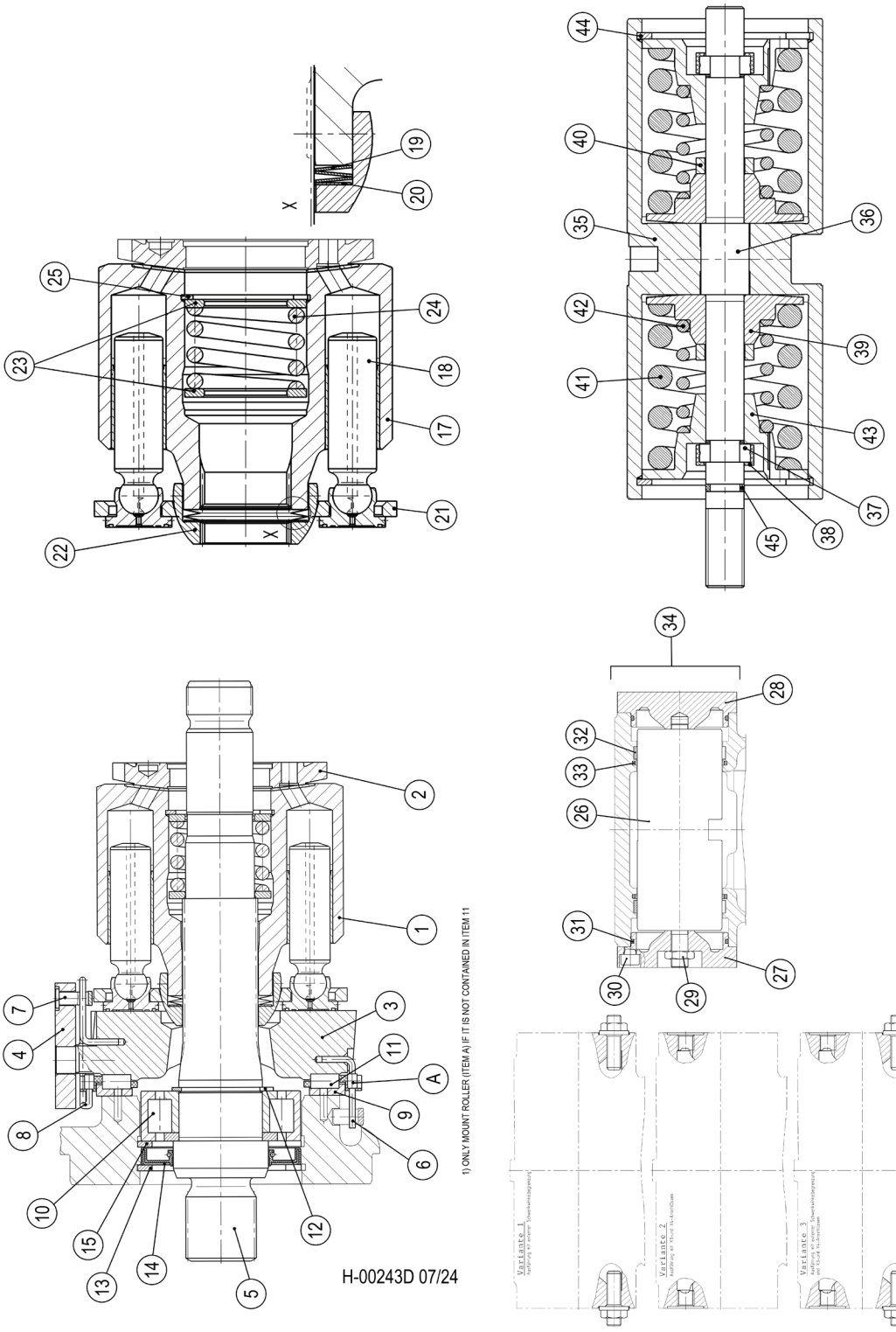

H100-01453 - SWING PUMP COMPONENTS

Item	Part #	Description	Qty.
1	R902079268	ROTARY GROUP	1
2	R902273785	CONTROL PLATE, LEFT-HAND ROTATION	1
3	R909449544	CRADLE	1
4	R909449607	SLIDER	1
5	R909449686	DRIVE SHAFT	1
6	R909408786	WIRE	1
7	R909443447	PIVOT PIN	1
8	R909449590	WIRE	1
9	R913051689	BEARING SHELL PAIR	1
10	R909156259	CYL. ROLLER BEARING	1
11	R902603727	CAGE PAIR	1
12	R909083360	RETAINING RING	1
13	R902600000	RETAINING RING	1
14	57704	SEAL, SHAFT - SWING PUMP - 54560	1
15	R909831280	RETAINING RING	1
16	R902002388	SEAL KIT	1
17	R902262308	CYLINDER	1
18	R902279922	PISTON PAD	9
19	R902192956	CUP-SPRING STACK	1
20	R909432991	SHIM RING	1
*	R909432992	SHIM RING	1
*	R909432993	SHIM RING	1
*	R909432994	SHIM RING	1
21	R902205451	RETAINING PLATE	1
22	R909445275	RETAINING BALL	1
23	R909449683	WASHER	2
24	R909436102	COMPRESSION SPRING	1
25	R909831182	RETAINING RING	1

H100-01454 - SWING PUMP COMPONENTS

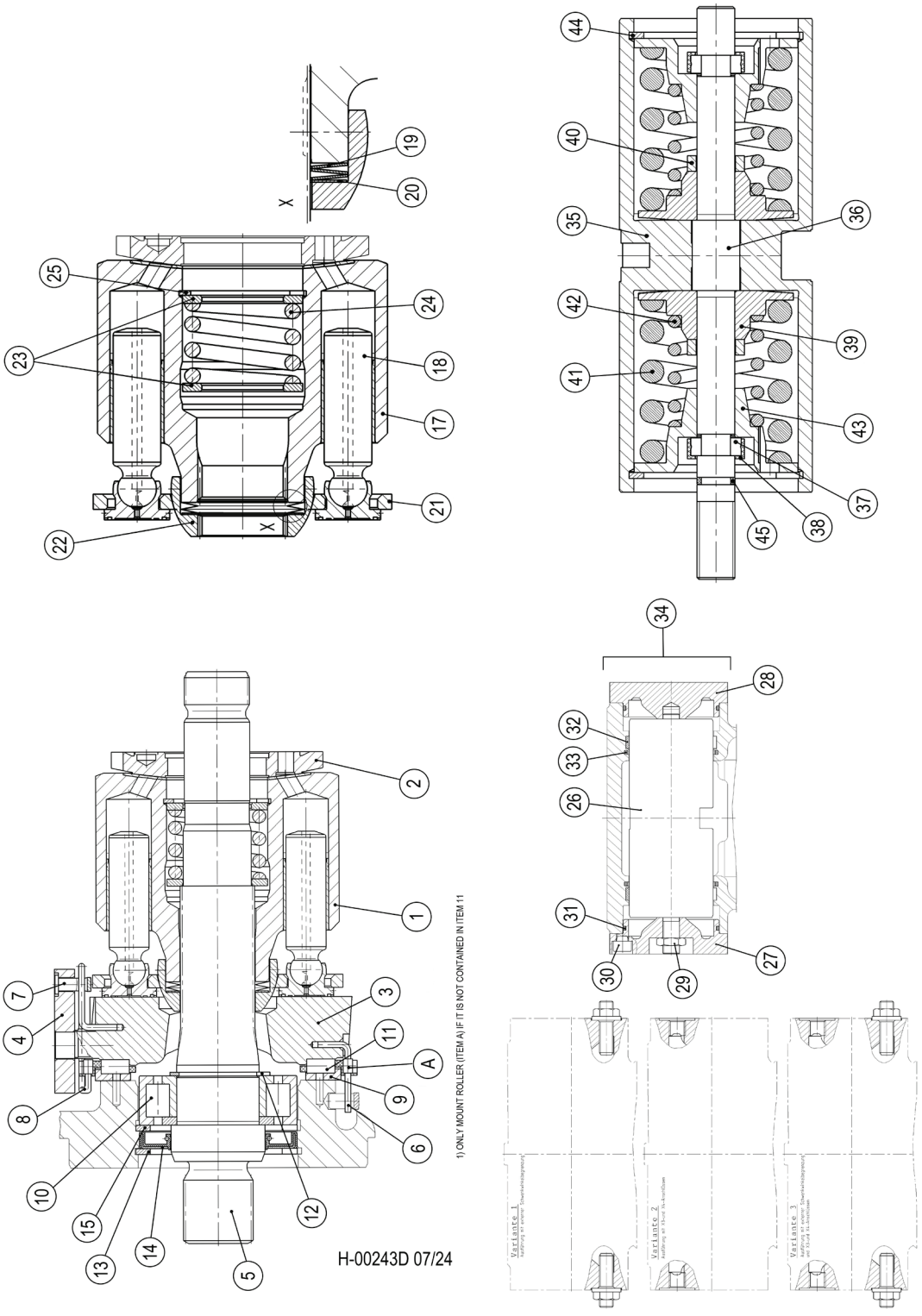

H100-01454 - SWING PUMP COMPONENTS

Item	Part #	Description	Qty.
26	R902020483	POSITIONING PISTON	1
27	R902007563	COVER	1
28	R902007564	COVER	1
29	R909154918	HEXAGON NUT	1
30	R909083034	SOCKET HEAD CAP SCREW	8
31	700220	O-RING	2
32	R902600750	ROD GUIDANCE RING	2
33	R902600194	ROD SEAL	2
34	R902002371	SEAL KIT	1
35	R902222640	POSITIONING PISTON	1
36	R909449238	ROD	1
37	R902015511	RING	2
*	R902015514	RING	2
*	R902015513	RING	2
*	R902015512	RING	2
*	R902015510	RING	2
*	R902015509	RING	2
*	R902015508	RING	2
*	R902013493	RING	2
38	R902600489	LOCATING RING	2
39	R909449245	SPRING DISK	2
40	R909445783	SPACER RING	2

H100-01455 - SWING PUMP COMPONENTS

NOTE: APPLY GREASE TO O-RINGS

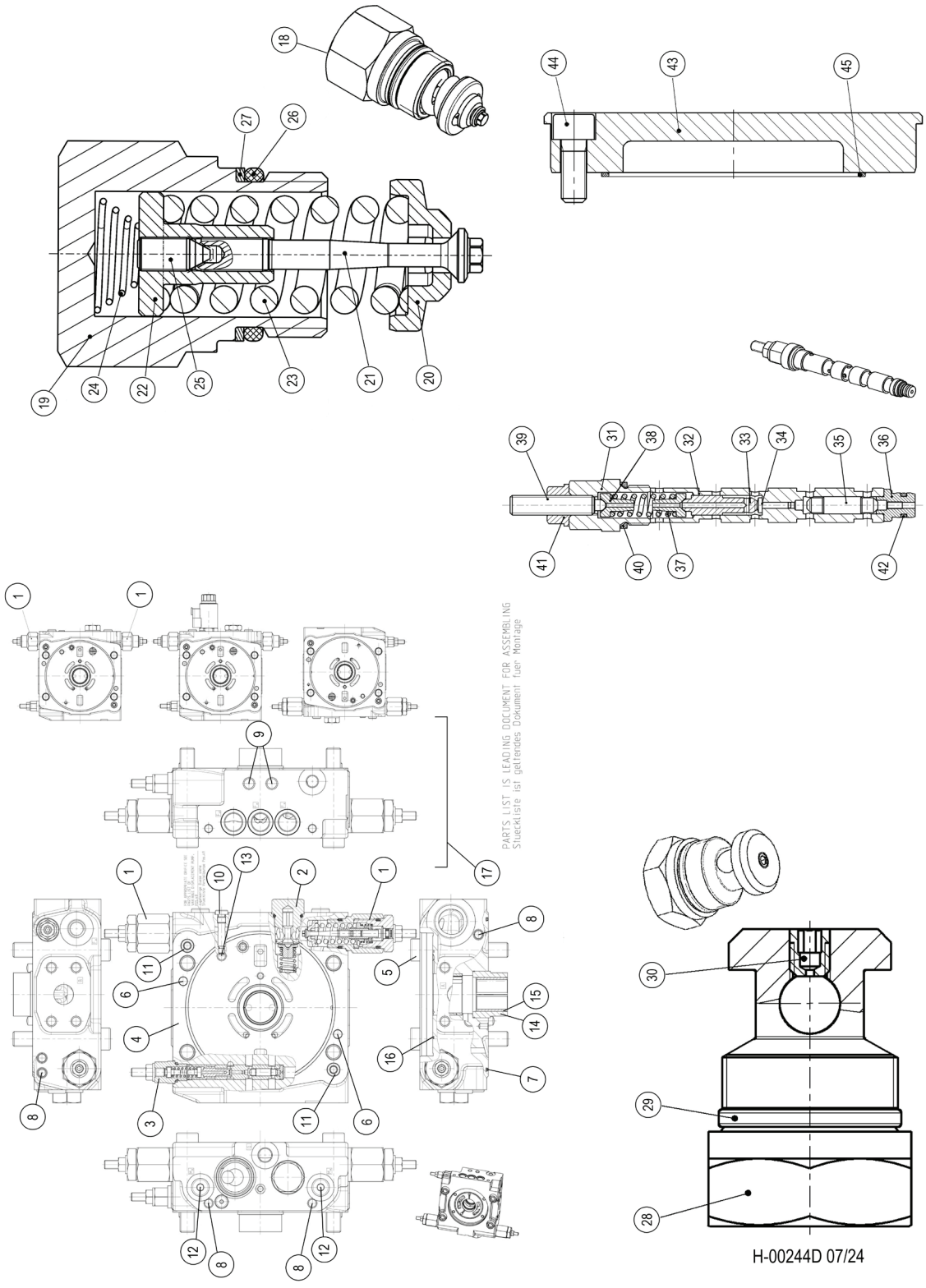

H100-01455 - SWING PUMP COMPONENTS

Item	Part #	Description	Qty.
1	56069	RELIEF, HIGH PRESSURE	2
2	R902152084	LOCKING SET	1
3	R909446763	PRESSURE CUT-OFF VALVE	1
4	R902153458	CONNECTION PLATE	1
5	R909153817	SOCKET HEAD CAP SCREW	4
6	R909084173	STRAIGHT PIN	2
7	R909830424	O-RING	1
8	R909831318	DOUBLE BREAK-OFF PLUG	3
9	R909831319	DOUBLE BREAK-OFF PLUG	1
10	R909154024	SCREW PLUG	1
11	R909085709	O-RING	2
12	699540	NUT, LOCKING	2
13	R909415314	DOUBLE BREAK-OFF PLUG	1
14	R909439249	BUSHING	1
15	R902283569	BUSHING	1
16	R913037188	KANTSEAL	1
17	R902002398	SEAL KIT	1
18	R902281039	PRESSURE RELIEF VALVE	1
19	R902281222	SCREW PLUG	1
20	R902010478	VALVE PLATE	1
21	R902010477	VALVE STEM	1
22	R902016288	EXPANSION PIECE	1
23	R909921948	COMPRESSION SPRING	1
24	R902215544	COMPRESSION SPRING	1
25	R902016289	SETSCREW	1
26	R909083761	O-RING	1
27	R909831768	BACKUP RING	1
28	R902011417	SCREW PLUG	1
29	R909083761	O-RING	1
30	R909156494	NOZZLE	1
31	R909449886	SCREW PLUG	1
32	R909431452	VALVE BUSHING	1
33	R909432162	CONTROL PISTON	1
34	R909432163	PISTON	1
35	R909432164	VALVE SPOOL	1
36	R909436284	VALVE SEAT	1
37	R902168277	COMPRESSION SPRING	1
38	R902049851	SPRING DISK	2
39	R909432167	ADJUSTING SCREW	1
40	R909083752	O-RING	1
41	R909152707	SEALING NUT	1
42	R909086380	O-RING	1
43	R902063317	PUMP COVER	1
44	R909083036	SOCKET HEAD CAP SCREW	4
45	R902002410	SEAL KIT	1

H100-01456 - SWING PUMP COMPONENTS

NOTE: APPLY GREASE TO O-RINGS

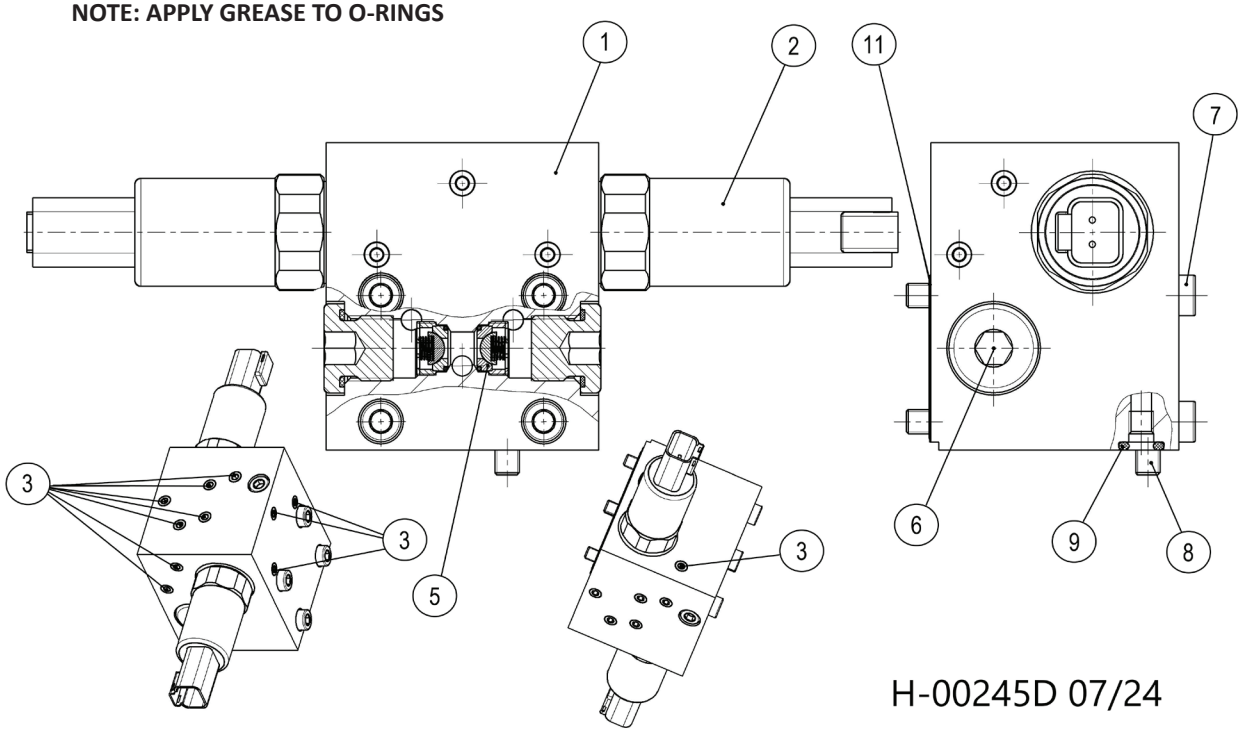

Item	Part #	Description	Qty.
1	R902115246	HOUSING	1
2	57591	VALVE, SWING PUMP (R901121566)	2
3	R902600705	PLUG	11
4	700230	GASKET	1
5	R909831957	CHECK VALVE	2
6	R909153816	SCREW PLUG	2
7	R909085831	SOCKET HEAD CAP SCREW	4
8	R909086491	SOCKET HEAD CAP SCREW	1
9	R909157512	O-RING	1

H100-01460 - SWING LOCK-CASE DRAIN MANIFOLD

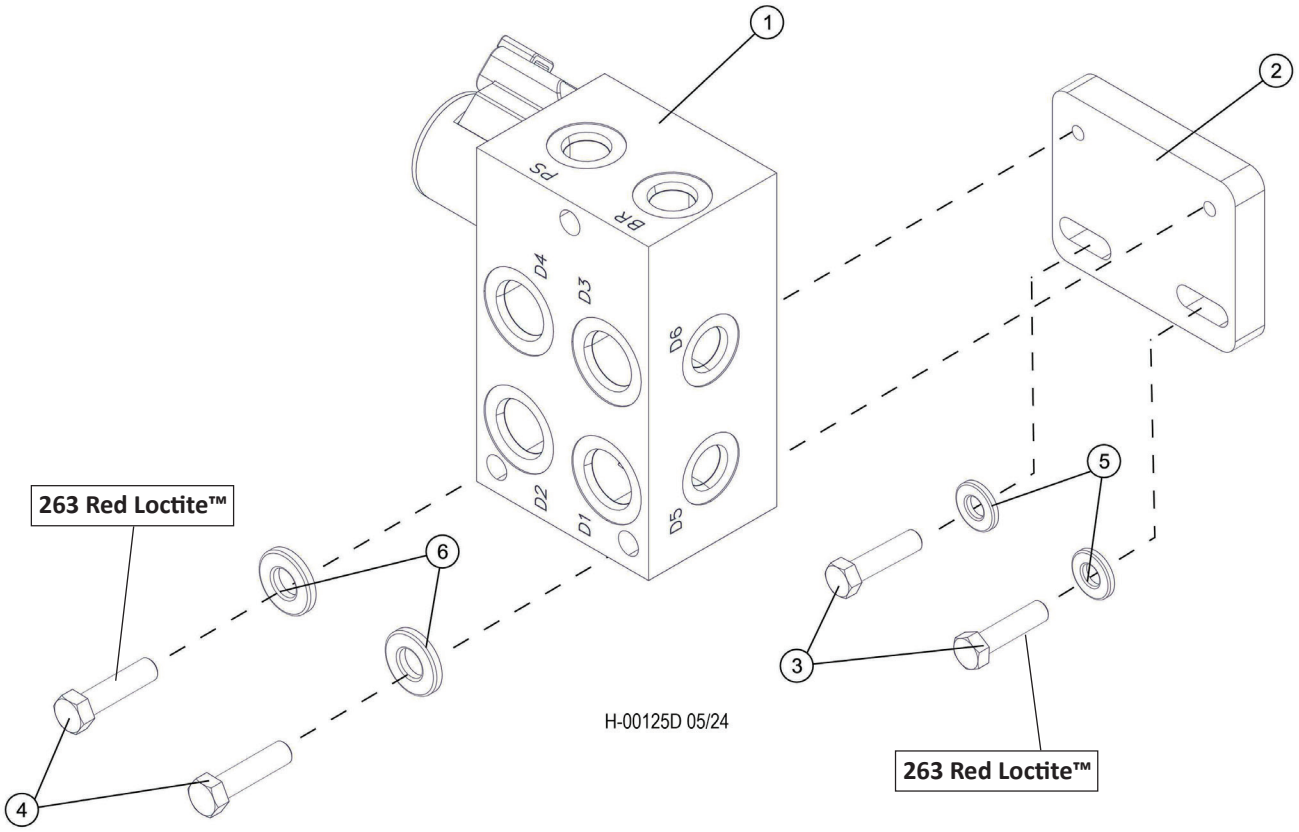

Item	Part #	Description	Qty.
1	55259	MANIFOLD, CASE DRAIN/SWING LOCK	1
2	46417	BAR, MANIFOLD SPACER	1
3	15589	BOLT - .3125” X 1” **263 RED LOCTITE™**	2
4	15508	BOLT - .25” X 2.5” **263 RED LOCTITE™**	2
5	10801	WASHER, FLAT - .3125”	2
6	10800	WASHER, FLAT - .25”	2
		MANIFOLD COMPONENTS	
*	58734	CARTRIDGE AND COIL	1
*	53737	COIL ONLY	1

H100-01461 - SWING LOCK-CASE DRAIN MANIFOLD COMPONENTS

NOTE: APPLY GREASE TO O-RINGS

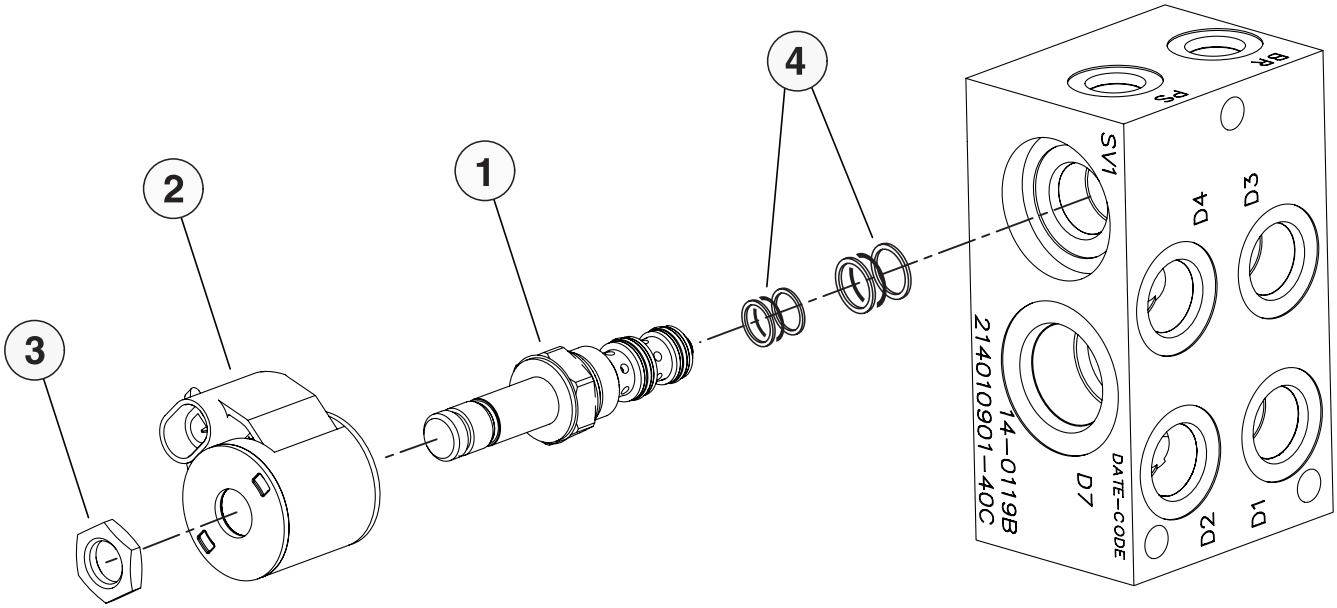

H-00145D 07/24

Item	Part #	Description	Qty.
	55259	MANIFOLD, CASE DRAIN/SWING LOCK	1
1	55986	CARTRIDGE, MOTOR SHIFT	1
2	53737	COIL, PARK BRAKE - TM	1
3	7004400	NUT	1
4	52228	KIT, SEAL	1
			1

H100-01470 - CHARGE PUMP

NOTE: APPLY GREASE TO O-RINGS

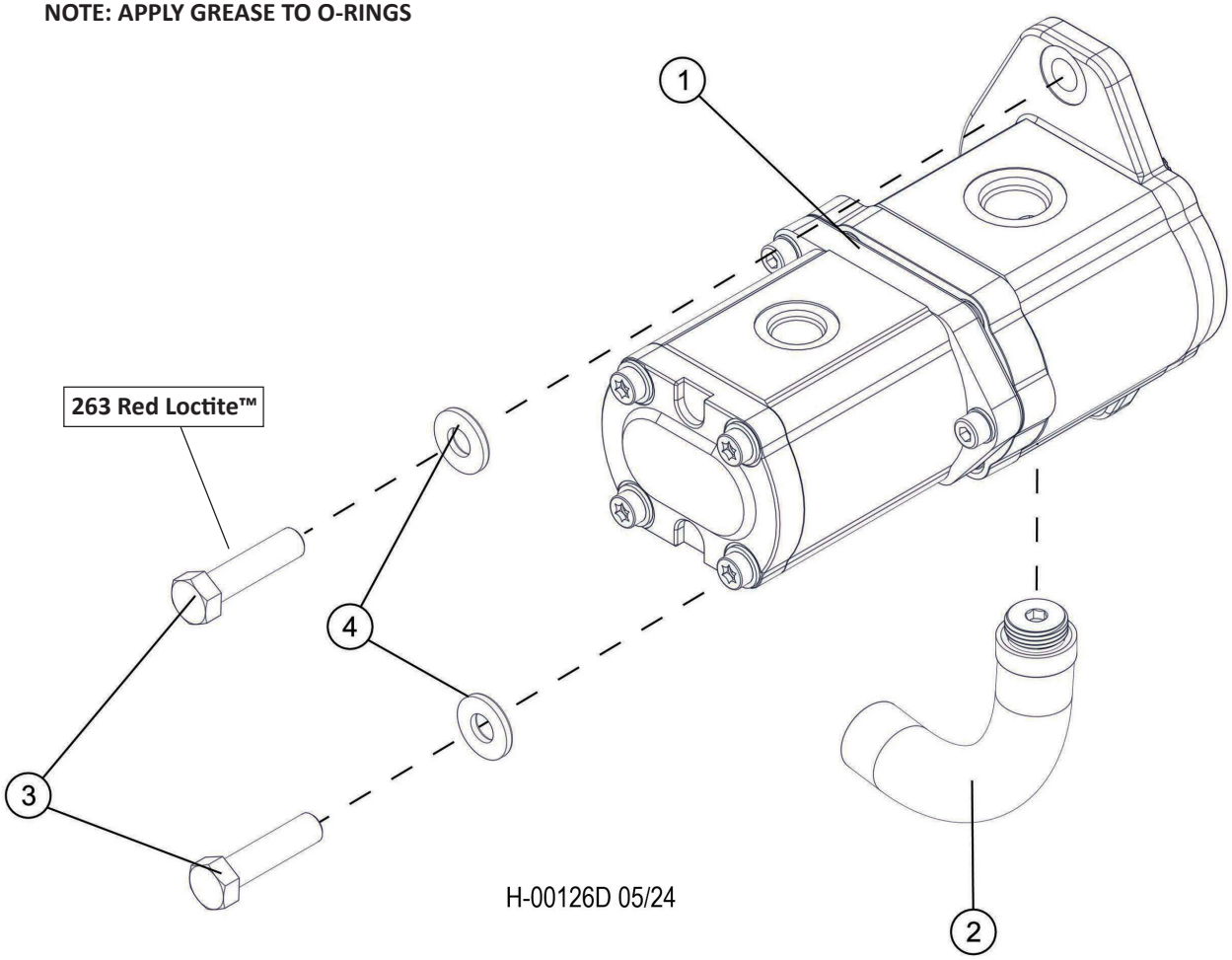

Item	Part #	Description	Qty.
1	57609	PUMP, CHARGE - DUAL FLOW	1
2	57663	FITTING, ELBOW - HOSE END 90°	1
3	18415	BOLT - 12MM-1.75P X 30MM **263 RED LOCTITE™**	2
4	18735	WASHER, FLAT - 12MM	2
		PUMP COMPONENTS	
*	58177	SHAFT SEAL	1
*	56067	SEAL KIT	1
*	1517010152	SEAL KIT	1

H100-01471 - CHARGE PUMP COMPONENTS

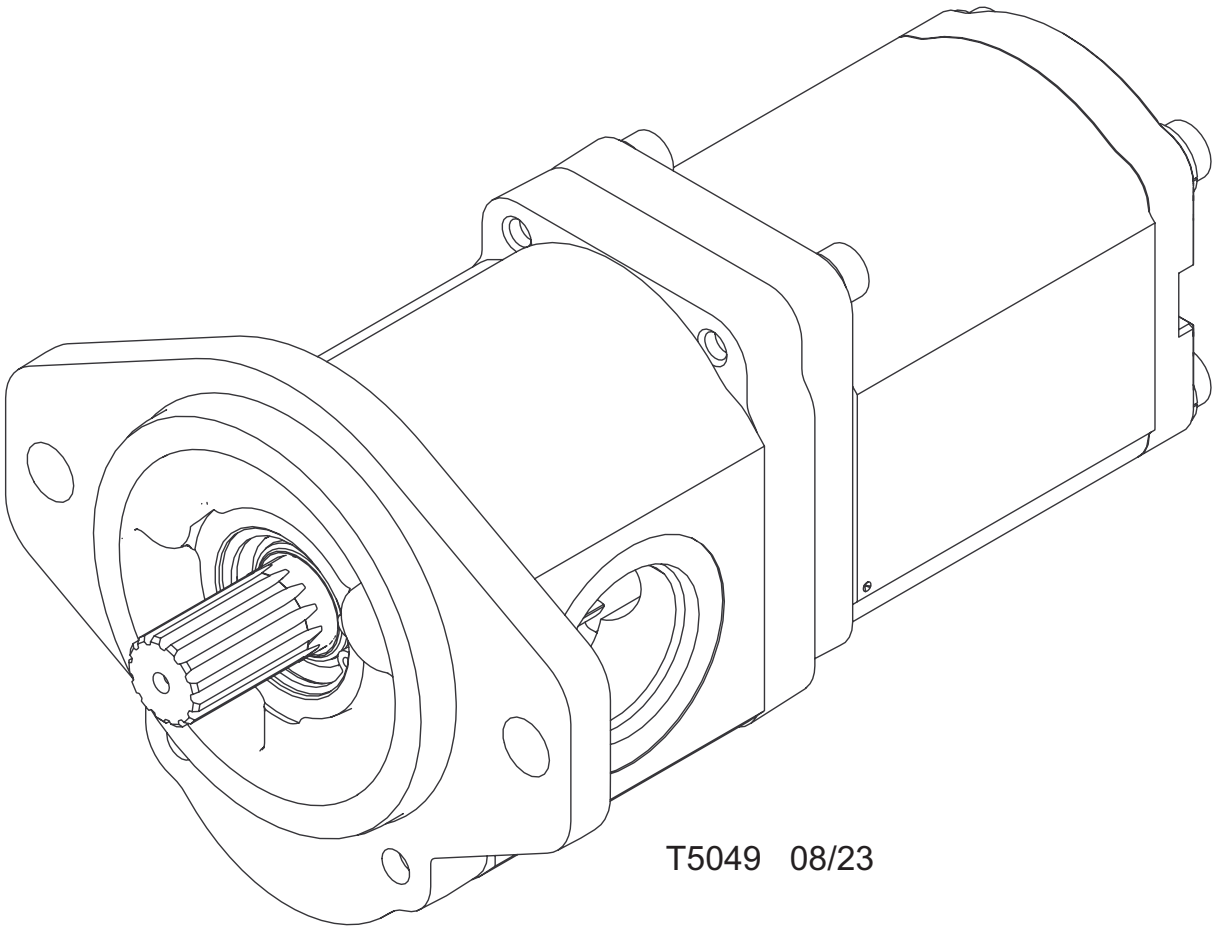

Item	Part #	Description	Qty.
*	57609	PUMP, CHARGE - DUAL FLOW	1
*	58177	SHAFT SEAL - 25.4-38.1-6.35 NBR	1
*	55323	SEAL KIT	1
*	21624	O-RING, CHARGE PUMP PILOT (AA4VG90)	1
*	2063677AD	COUPLING, CHARGE PUMP	1

***MEANS NOT SHOWN**

H100-01473 - CHARGE PUMP SUCTION

NOTE: APPLY GREASE TO O-RINGS

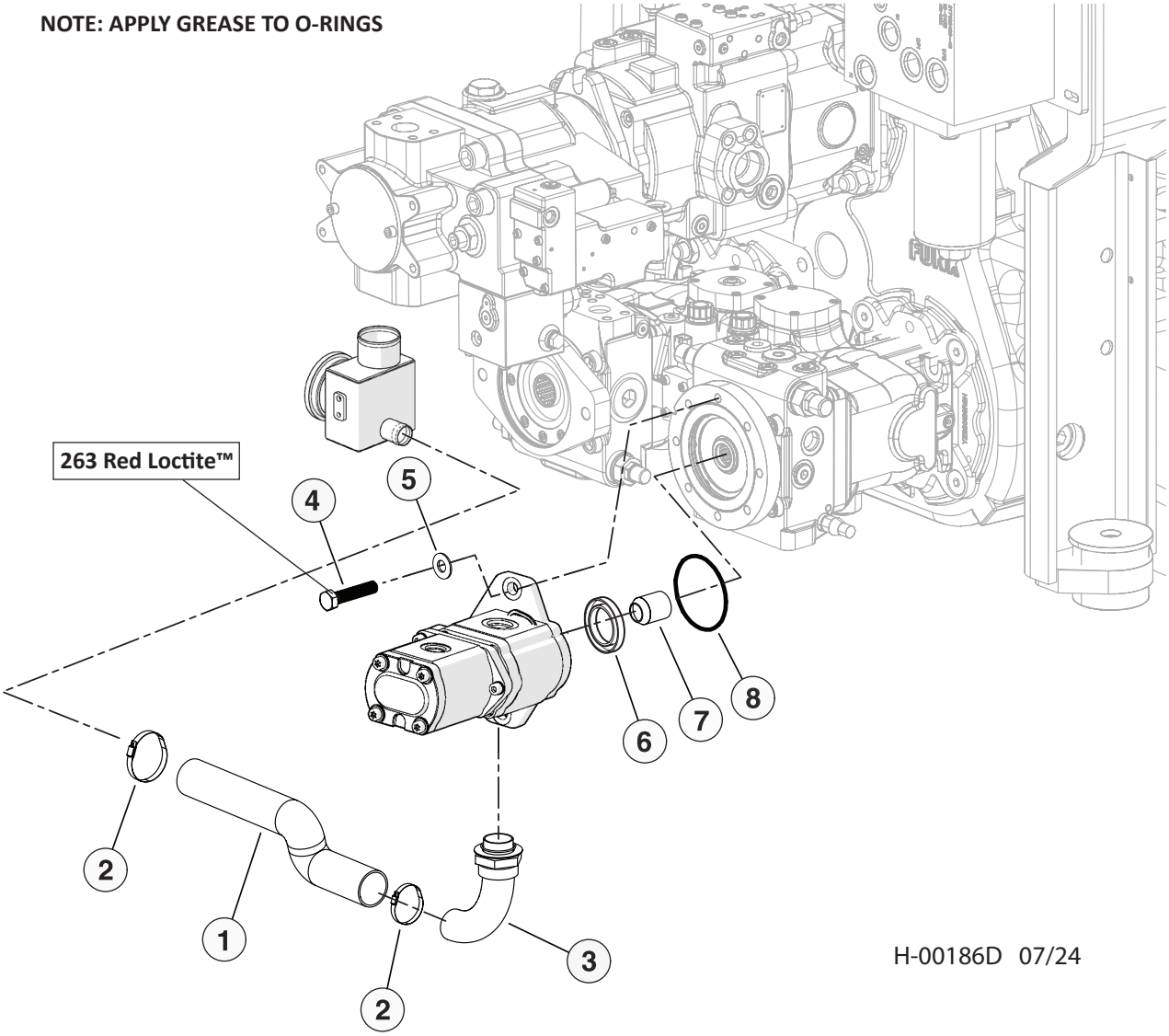

H-00186D 07/24

Item	Part #	Description	Qty.
1	65833 - (65952 - KIT)	HOSE, SUCTION, 7216-15021724-0-0	1
2	55614	CLAMP, CONSTANT TORQUE - 1.75”	1
3	57663	FITTING, ELBOW - HOSE END 90°	1
4	18735	WASHER, FLAT - 12MM **263 RED LOCTITE™**	2
5	18415	BOLT - 12MM-1.75P X 30MM	2
6	58177	SEAL, SHAFT - 57609 CHARGE PUMP	1
7	2063677AD	COUPLING, CHARGE PUMP	1
8	21624	O-RING, CHARGE PUMP PILOT (AA4VG90)	1

H100-01480 - CHARGE OIL MANIFOLD

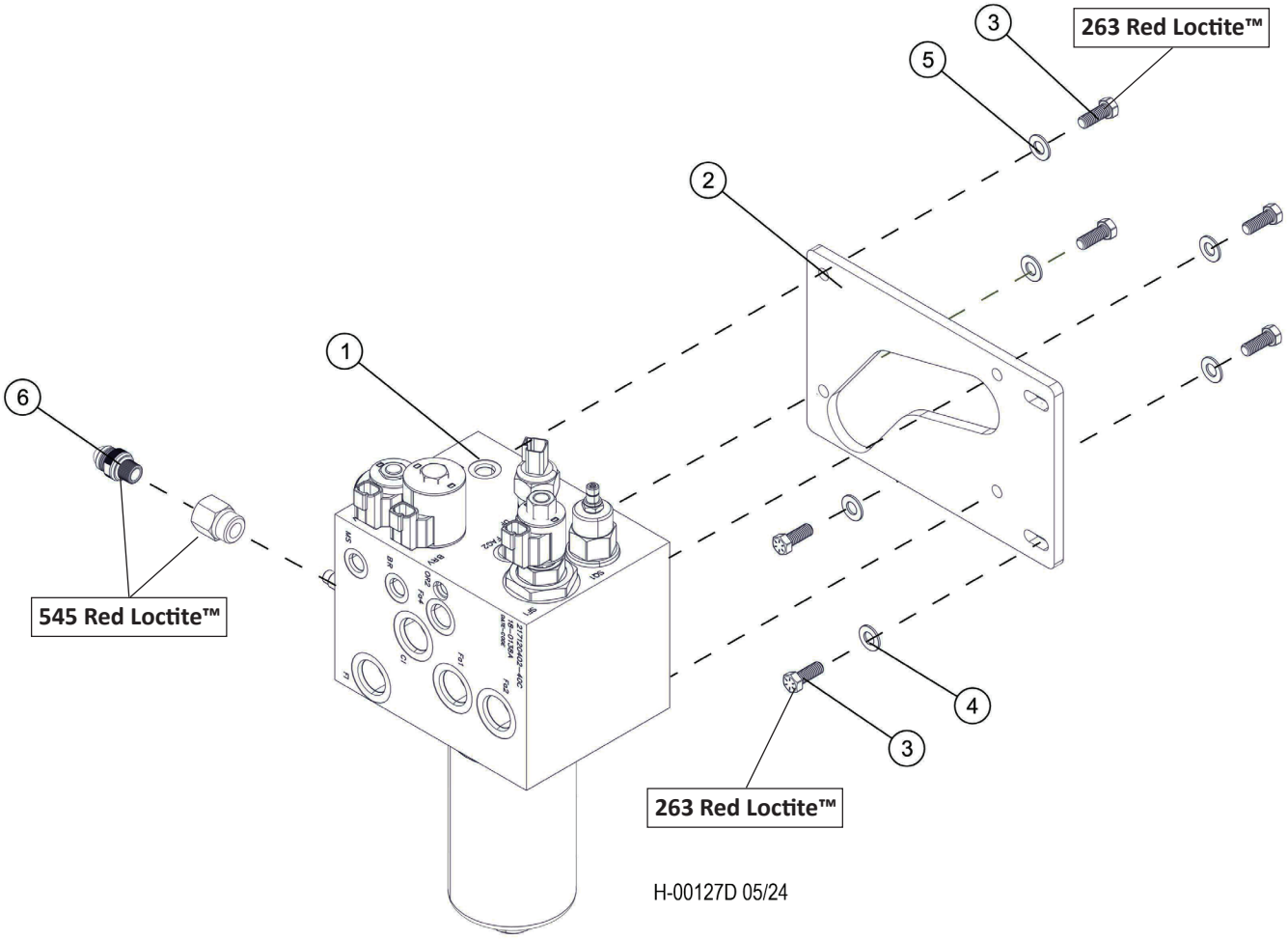

Item	Part #	Description	Qty.
1	57881	MANIFOLD, CHARGE / COOLER - D SERIES	1
2	60391	PLATE, CHARGE BLOCK MOUNT - D	1
3	11707	BOLT - .375” X 1” **263 RED LOCTITE™**	6
4	10801	WASHER, FLAT - .375”	2
5	15528	WASHER, SAE FLAT - .375”	4
6	57820	TAP, GAUGE PORT # 6 SAE - Oring Boss **545 RED LOCTITE™**	1

H100-01482 - CHARGE OIL MANIFOLD COMPONENTS

NOTE: APPLY GREASE TO O-RINGS

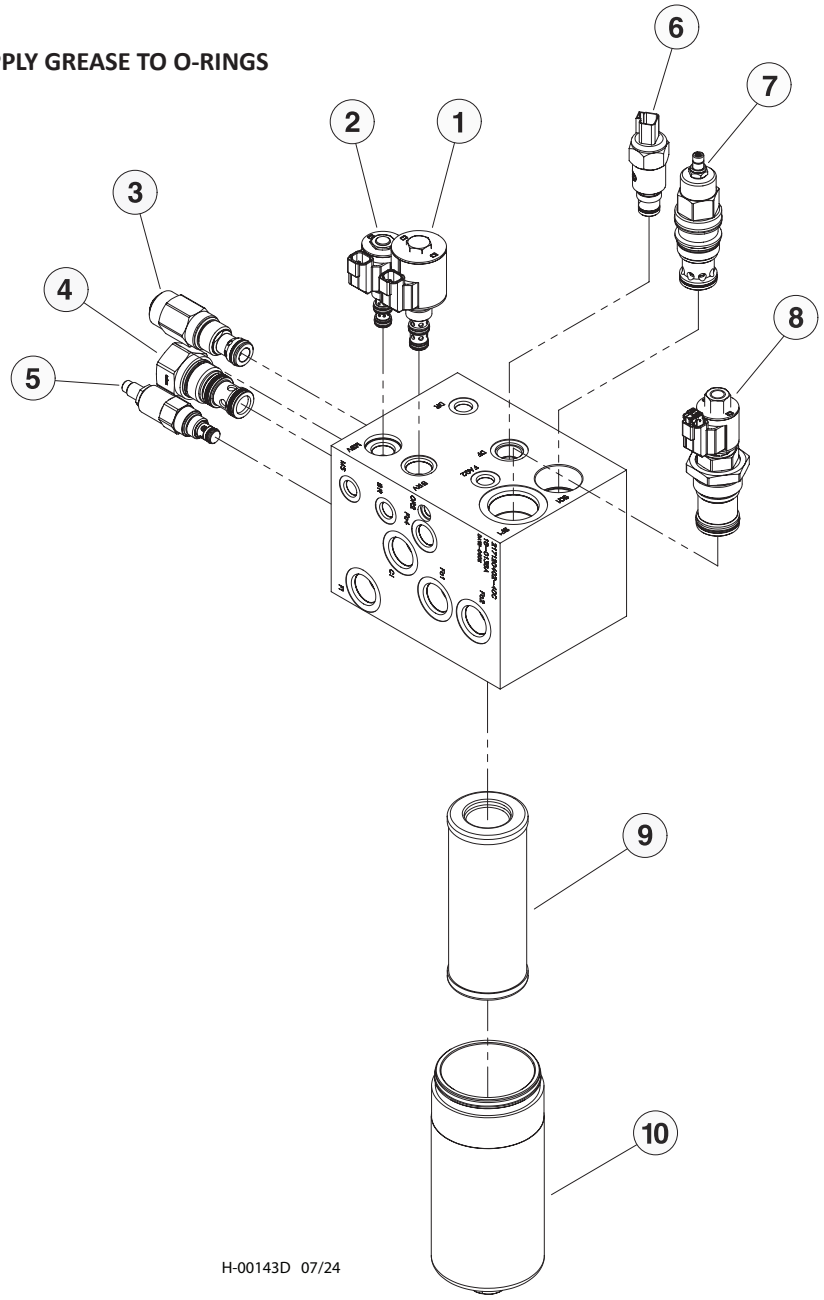

Item	Part #	Description	Qty.
1	58362	CARTRIDGE, COIL COMBO PB	1
2	58363	CARTRIDGE, COIL COMBO MTR SFT	1
3	53882	CARTRIDGE, PRES. RELIEF	1
4	EP16-S35 - (57881)	CARTRIDGE	1
5	RV12-26H - (57881)	CARTRIDGE	1
6	62004	SWITCH, FILTER INDICATOR	1
7	52223	CARTRIDGE, FAN DRIVE	1
8	53737	COIL, PARK BRAKE	1
9	19861	ELEMENT, HYDROSTATIC FILTER	1
10	LF 240 BOWL - (57881)	BOWL	1

H100-01490 - MANIFOLD, OIL COOLER CNTRL/SAW STOP

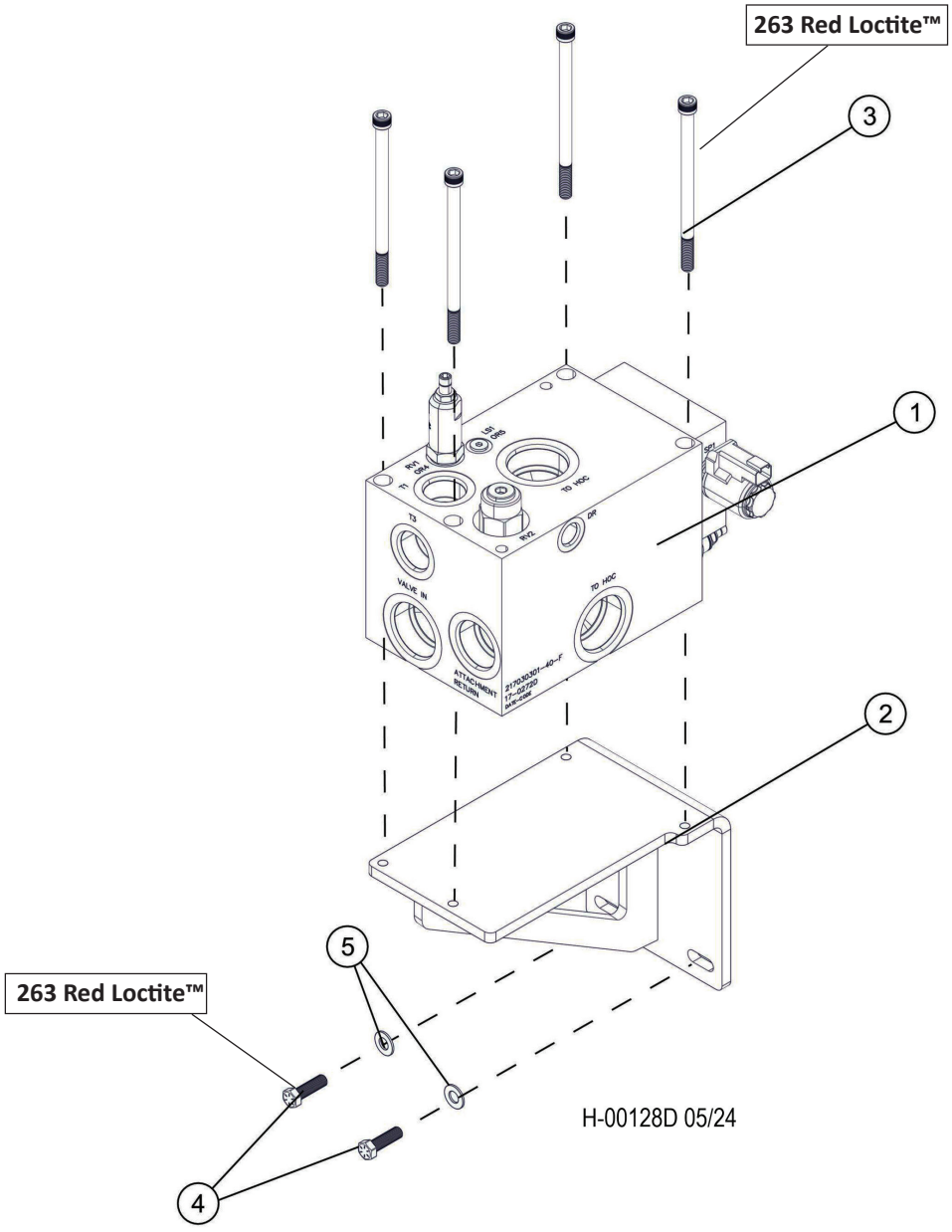

Item	Part #	Description	Qty.
1	57849	MANIFOLD, HOC CONTROL-RETURN - D SERIES	1
2	60403	BRACKET, MANIFOLD - HOC	1
3	58219	BOLT, ALLEN 3/8-16X6 HOC MANIFOLD **263 RED LOCTITE™**	4
4	10402	BOLT, 3/8”x1 1/4” **263 RED LOCTITE™**	2
5	10802	3/8” WASHER	2

H100-01491 - MANIFOLD, OIL COOLER CNTRL/SAW STOP COMPONENTS

NOTE: APPLY GREASE TO O-RINGS

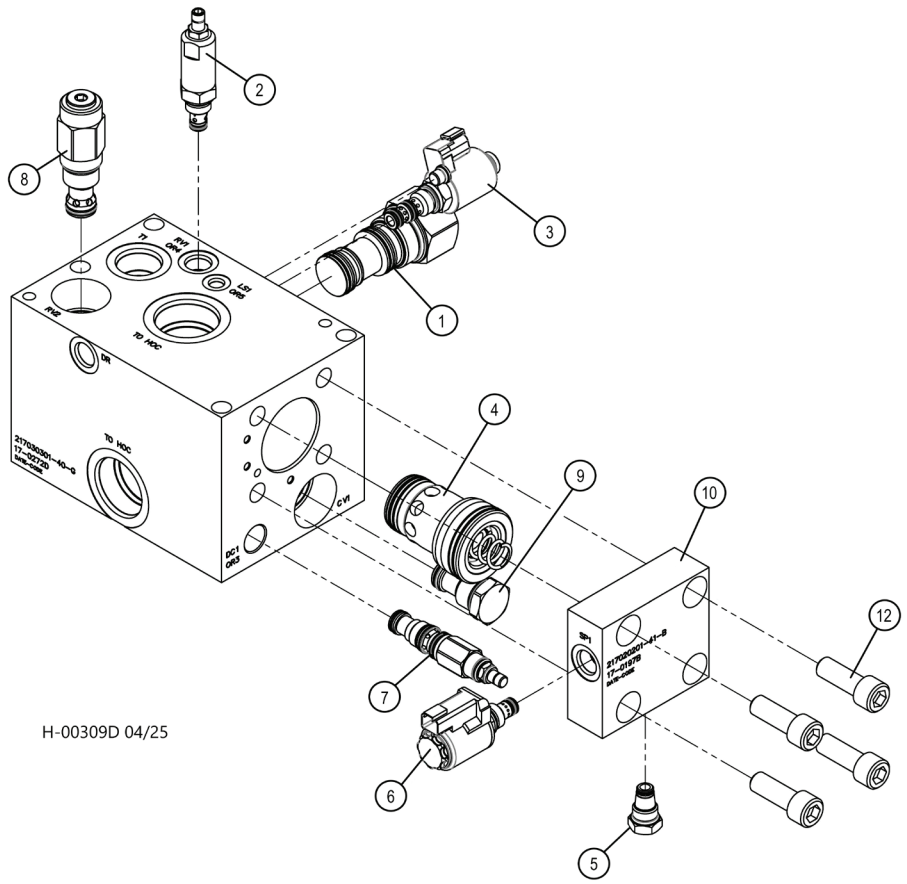

Item	Part #	Description	Qty.
	57849	MANIFOLD, HOC CONTROL-RETURN	1
1	52184	CARTRIDGE, FAN DRIVE - EV20-S34 (51627)	1
*	SK20-S3N-MN	SEAL KIT	1
2	55971	PRESSURE RELIEF VALVE	1
3	OD133051A00	DIRECTIONAL CONTROL VALVE	1
*	OD.02.36-22-3P-OC-000	COIL	1
*	R901101723	SEAL KIT	1
4	LC32DB20E-7X/	LOGIC VALVE	1
*	R900313106	SEAL KIT	1
5	53386	SCREEN CARTRIDGE	1
6	55745	SOLENOID VALVE CARTRIDGE	1
*	2022920	SEAL KIT	1
7	DRBB-LEN	CARTRIDGE VALVE	1
*	990011007	SEAL KIT	1
8	56091	PRESSURE RELIEF VALVE	1
*	SK12-2N-B	SEAL KIT	1
9	CV12-20-0-N-80	CHECK VALVE	1
*	SK12-2N-T	SEAL KIT	1

***MEANS NOT SHOWN**

H100-01500 - RETURN MANIFOLD

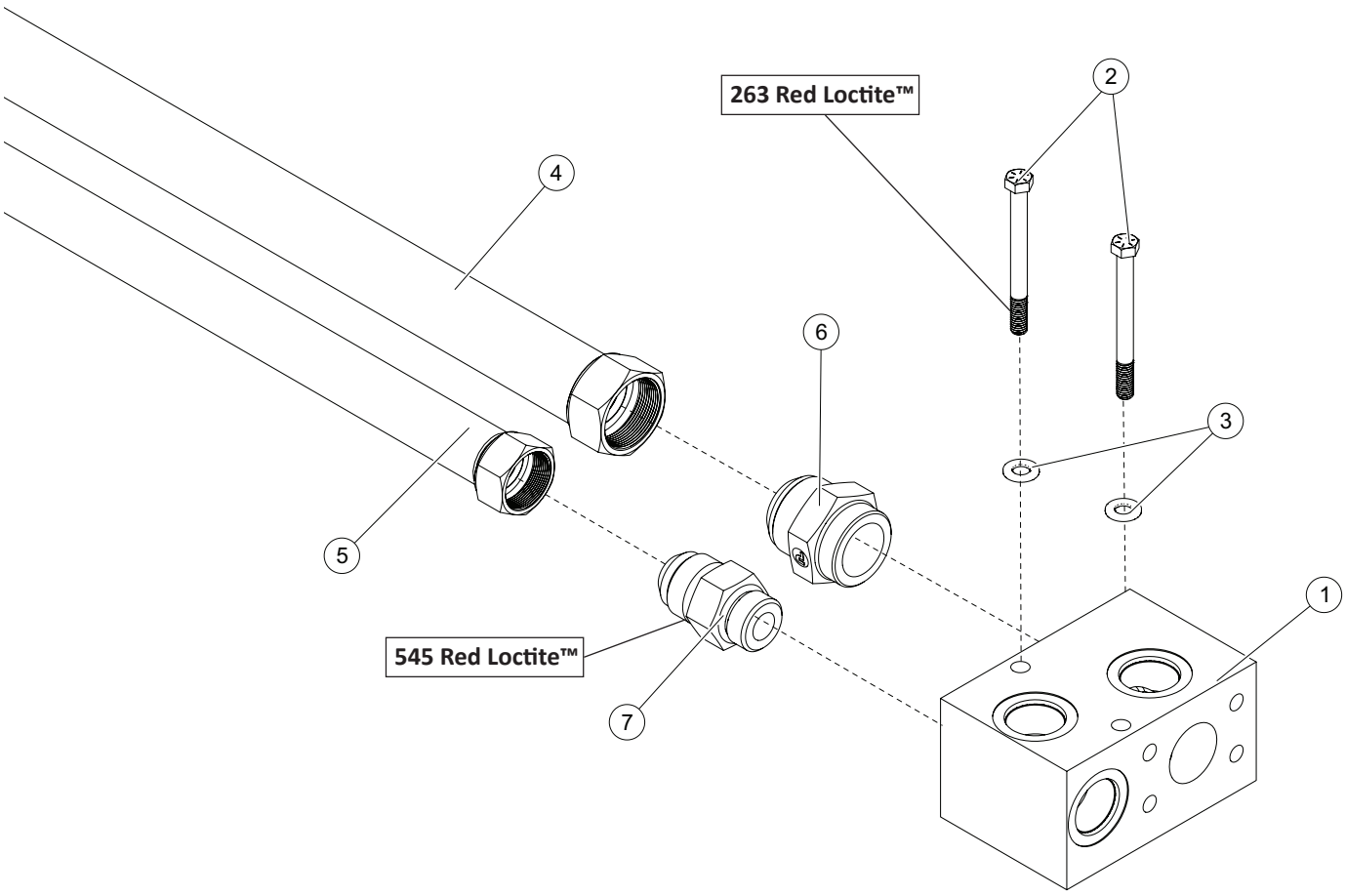

H-00129D 05/24

Item	Part #	Description	Qty.
1	63280	MANIFOLD, RETURN	1
2	15592	BOLT - .375" X 4" **263 RED LOCTITE™**	2
3	15528	WASHER, SAE FLAT - .375" OR 3/8"	2
4	55166	TUBELINE, HYD TANK TO BH 45 DEG (SEE NOT	1
5	55170	TUBELINE, TANK TO CASE MAN. - C MOD(NOTE	1
6	22319	CONNECTOR, STR 24F5OX-S THRML B-PASS GT	1
7	15497	CONNECTOR, STR - 16 F5OX-S **545 RED LOCTITE™**	1

H100-01510 - GULLWING DOOR HYD PUMP

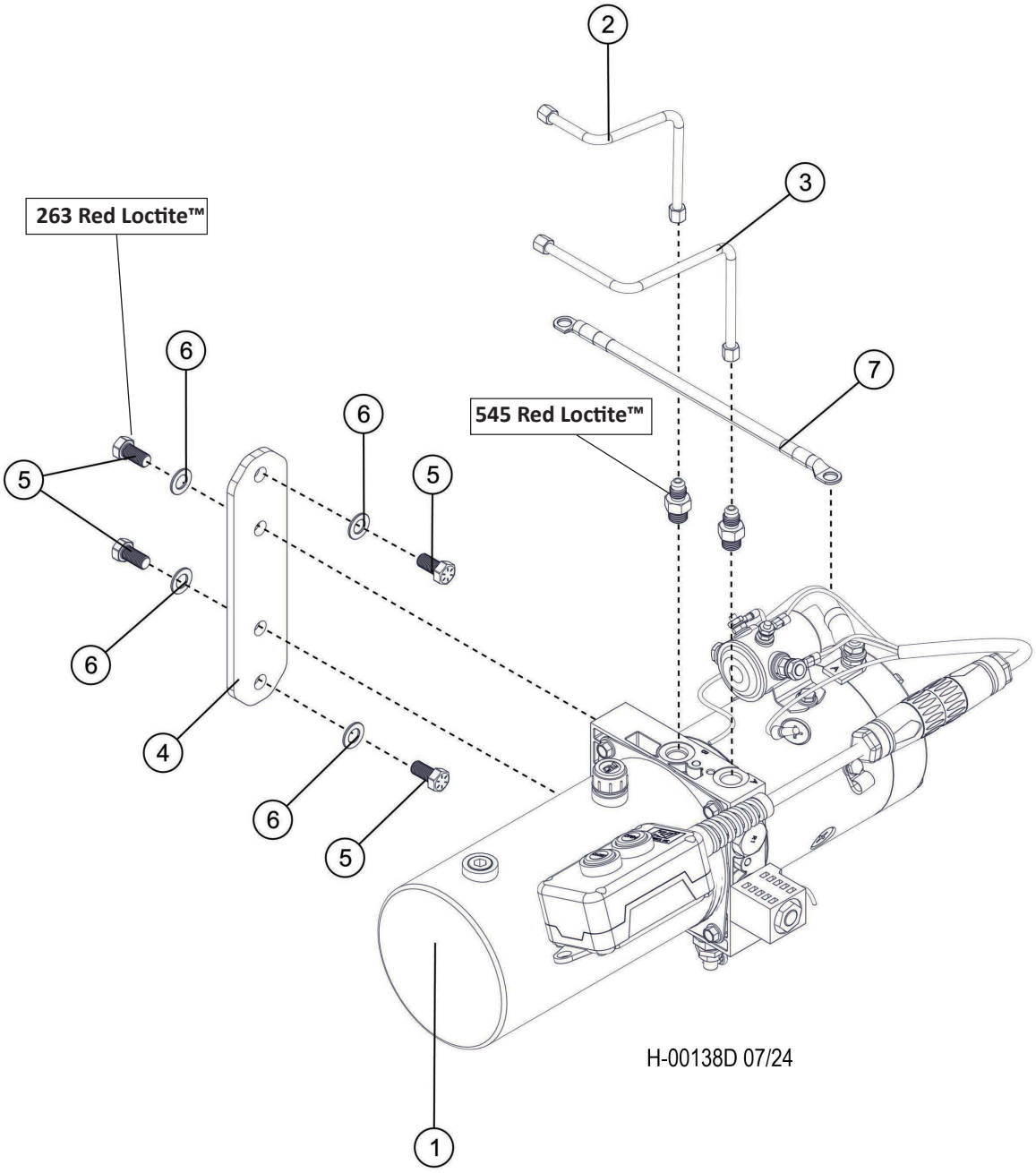

Item	Part #	Description	Qty.
1	51577	PUMP, POWER UNIT - GULL WING W/PENDANT	1
2	55593	TUBELINE, CANOPY LIFT PUMP TO B PORT	1
3	55592	TUBELINE, CANOPY LIFT PUMP A PORT	1
4	47542	PLATE, GULLWING PUMP	1
5	15542	BOLT - .375” X .75” **263 RED LOCTITE™**	4
6	15528	WASHER, SAE FLAT - .375”	4
7	55336	CABLE, BATTERY - NEGATIVE - “C” - 24”	1

H100-01511 - GULLWING DOOR HYD PUMP COMPONENTS

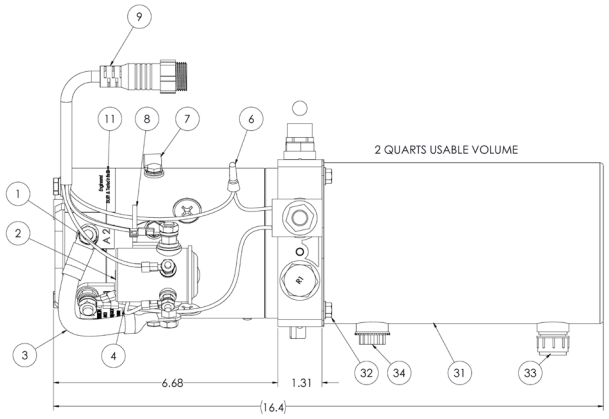

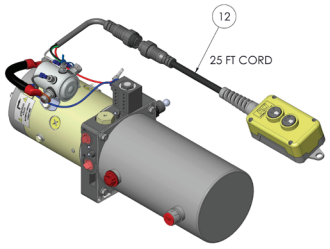

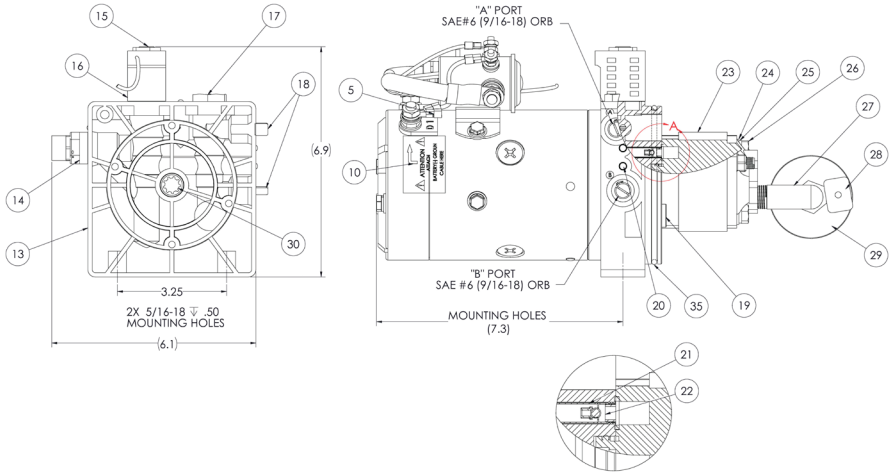

Item	Part#	Description	Qty.
	51577	PUMP, POWER UNIT - GULL WING W/PENDANT	1
1	2445-1	24V DC MOTOR 4.5”O.D. 2.0 KW GOLD, TWO TERMINAL	1
2	57185	24V DC STEEL CASE CONTINOUS DUTY, COPPER TO COPPER START SOLENOID	1
3	27-1	TERMINAL WIRE (SOLENOID POWER TERMINAL TO MOTOR POWER TERMINAL)	1
4	27-16	GROUND WIRE (MOTOR GROUND TERMINAL TO SOLENOID GROUND TERMNIAL)	1
5	Q30-8	ELECTRICAL RING TERMINAL 5/16 POST. 22-18 ga	1
6	Q31-2	NYLON CRIMP CAP - FIT 16-14	1
7	Q34-9	NYLON CABLE CLAMP, CLOSE DIA 5/16’’	1
8	Q37-2	NYLON BLACK CABLE TIE 8’’	1
9	74-23	TOWER HALF SOLID MOLD CONNECTOR ASSY WITH 8’’ CORD & 4 WIRES	1
10	31-10	LABEL, BATTERY GROUND TO MOTOR GROUND TERMINAL	1
11	31-12	LABEL, AMERICAN FLAG, ENGINEERED, BUILT & TESTED IN USA	1
12	395-53	2 BUTTON 4 WIRE REMOTE PENDANT W/ MALE SOLID MOLD CYLINDRICAL QUICK DISCONNECT 25’ CORD.	1
13	58340	UNIVERSAL MANIFOLD CIRCUIT 108	1
14	LRV-080-B	CARTRIDGE RELIEF VALVE, ADJUSTABLE SET @ 3700 PSI	1
15	LSV2-08-4CO	4W2P SPOOL TYPE CARTIDGE SOLENOID VALVE	1
16	58172	24V DC #8 SQUARE COIL W/DUAL WIRE LEADS	1
17	54318	SAE #8, 4W2P CAVITY PLUG	1
18	Q5-12	TAPERED CAP PLUG, 0.47”-0.54” DIA (RED). LDPE	2
19	VPS-6	SAE #6 (9/16-18) O-RING PLUG	1
20	SX-6A	EXPANDER SEALING PLUG, 6mm ZINC PLATED	4
21	Q56-0313-0093	5/16 x .014 x 0.93’’ BRASS TUBING	1
22	CVI-4	LEE 855 SERIES CHECK VALVE, FORWARD FLOW	1
23	PL-0.63-11T	PRESSURE LOADED GEAR PUMP (0.038 IN^3/R)	1
24	Q13-031	5/16’’ STEEL FLAT WASHER	2
25	Q14-031	5/16’’ STEEL SPLIT LOCK WASHER	2
26	Q16-031-0300	5/16-24 x 3.00” HEX HEAD CAP SCREW, GRADE 5	2
27	21-1	3/8’’ NPT 90 DEGREE ALUMINUM DIE-CAST INLET ELBOW	1
28	23-1	RECTANGLE CARBON MAGNET	1
29	57-6	3/8” NPT INLET STRAINER, 120 MESH, PLEATED	1
30	52-39	MOTOR / PUMP COUPLING, SAE 9 TOOTH TO 11 TOOTH, 1.67 INCH	1
31	8080-2	2 QUART STEEL DEEP DRAWN RESERVOIR	1
32	Q19-025-0038	1/4-20 x 0.375’’ HEX FLANGE HEAD CAP SCREW	4
33	25-1	3/8 NPT 40 MICRON AIR BREATHER	1
34	58625	3/8 NPT PLASTIC THREADED PLUG W/NEOPRENE GASKET	1
35	Q2-4113	O-RING, I.D. 113mm, C/S 4mm. METRIC BUNA, RESERVOIR	1

H100-01520 - GULLWING DOOR CYLINDER

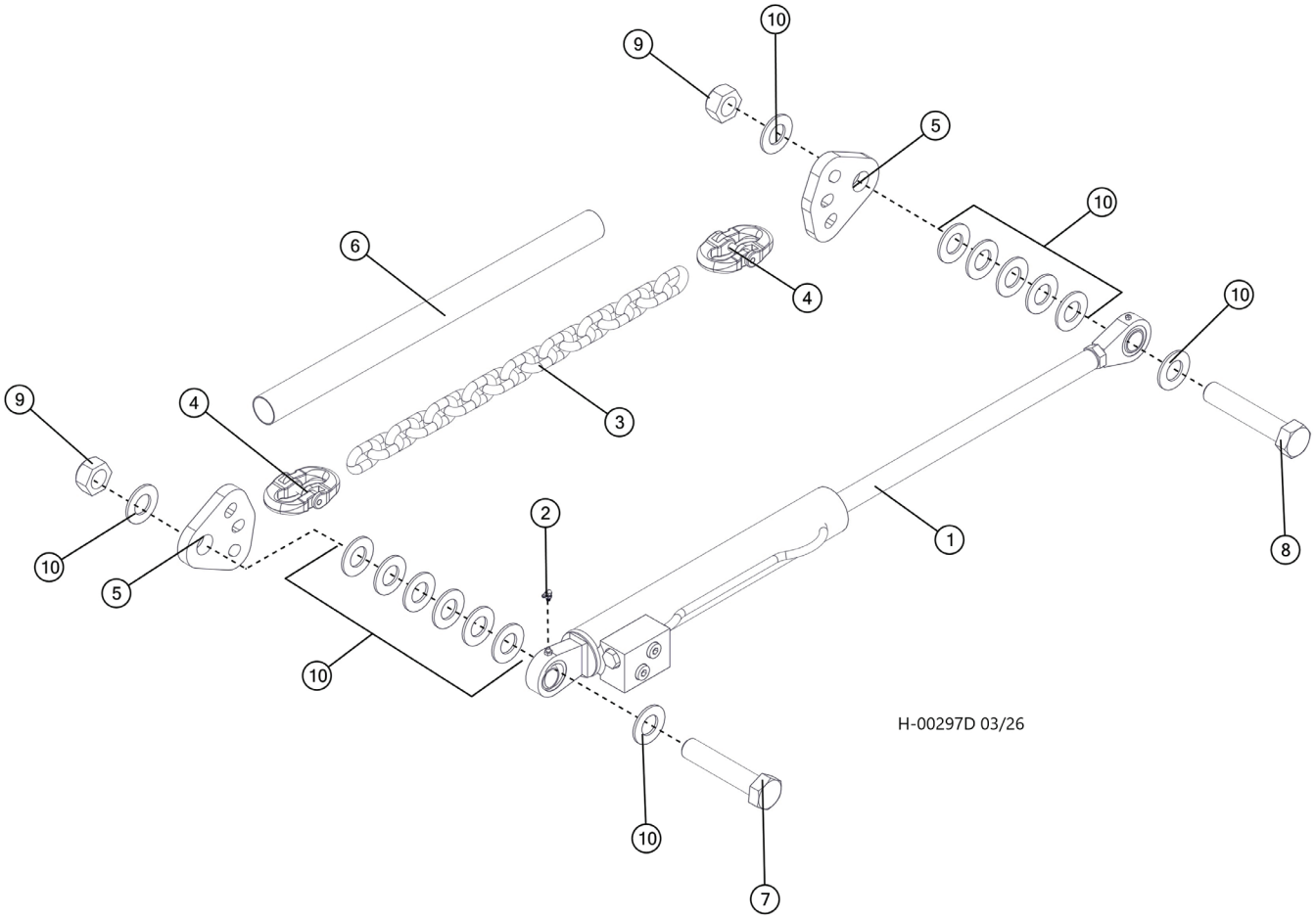

Item	Part #	Description	Qty.
1	57848.1	CYLINDER, GULLWING LIFT	1
2	15662	FITTING, GREASE - .25-28" - 90	1
3	557150	CHAIN, .50, G100, 17 LINK	1
4	699270	SHACKLE, PIVOT, .50", G100	2
5	699280	LINK, HOOD CHN, ADJUST, 1.31"	2
6	684201	SLEEVE, PROTECTIVE HOSE - 2.00 X 27.00	1
7	700050	BOLT, HHCS, 1.25-7 X 6.00, GR8, YZ	1
8	65194	BOLT, HHCS, 1.25-7 X 6.50, GR8, YZ	1
9	23989	NUT, LOCK - 1.25"	2
10	22531	WASHER, SAE FLAT - 1.25"	15

H100-01521 - GULLWING DOOR CYLINDER COMPONENTS

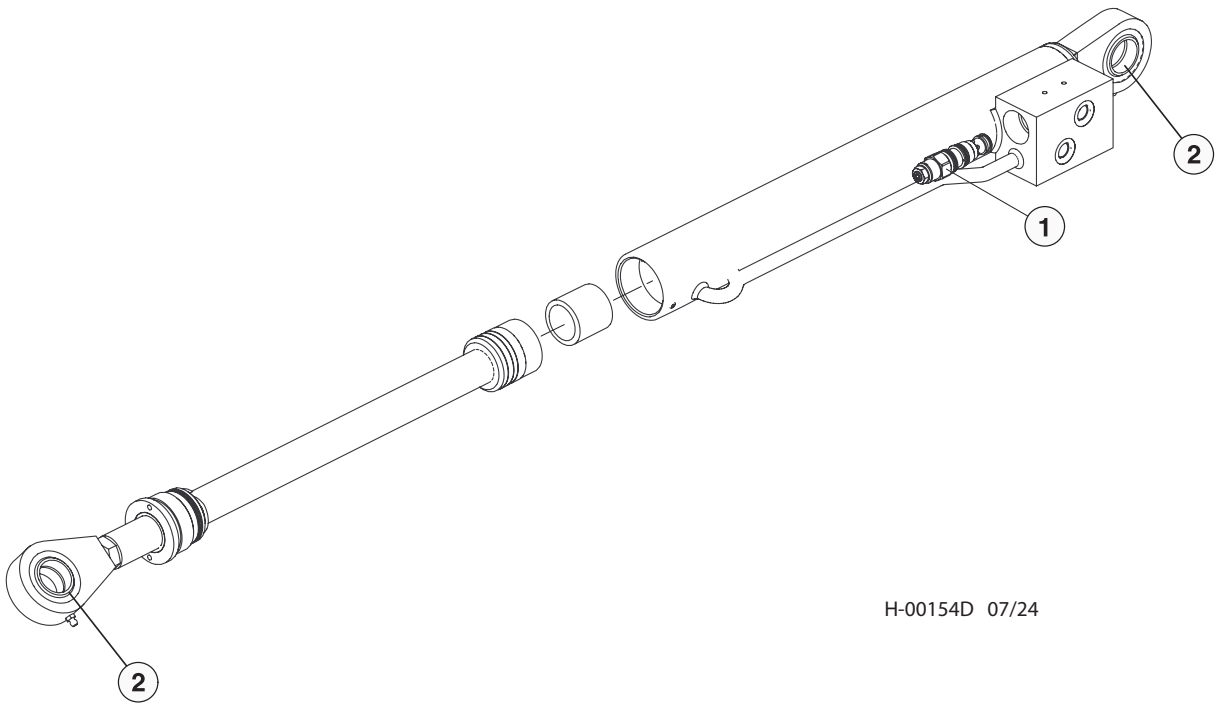

Item	Part #	Description	Qty.
	57848	CYLINDER, GULLWING LIFT	1
1	58009	CARTRIDGE, COUNTER BALANCE	1
2	GEZ020ES	SPHERICAL BUSHING	2
	59046	SEAL KIT	1

MAIN/REVOLVING FRAME AND RELATED PARTS - (J)

J100-00000 - BULKHEAD FITTING BRACKET

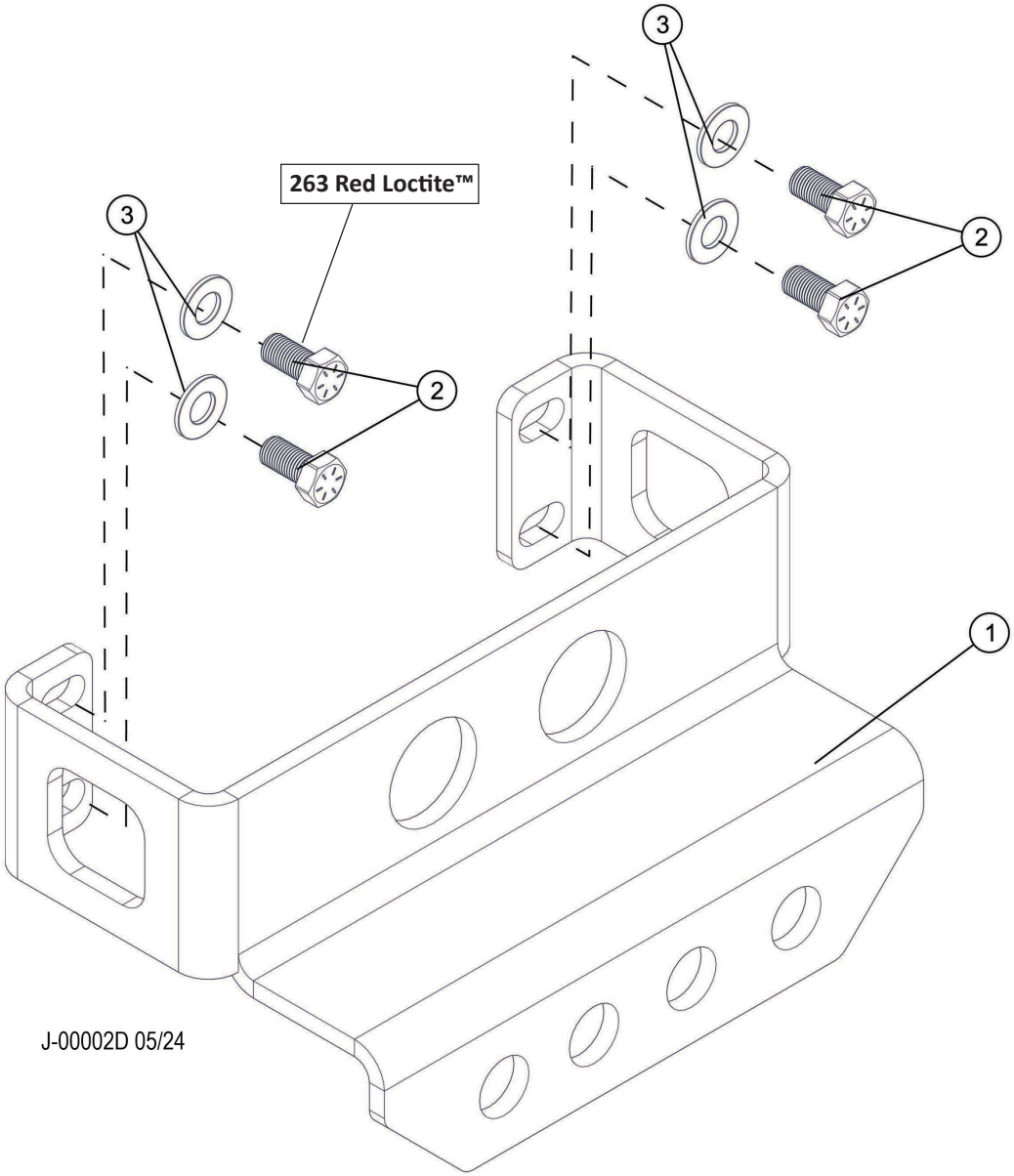

Item	Part #	Description	Qty.
1	60559	BULHEAD, FRONT - TM	1
2	15542	BOLT - .375” X .75” **263 RED LOCTITE™**	4
3	15528	WASHER, SAE FLAT - .375” OR 3/8”	4

J100-00005 - REVOLVING FRAME

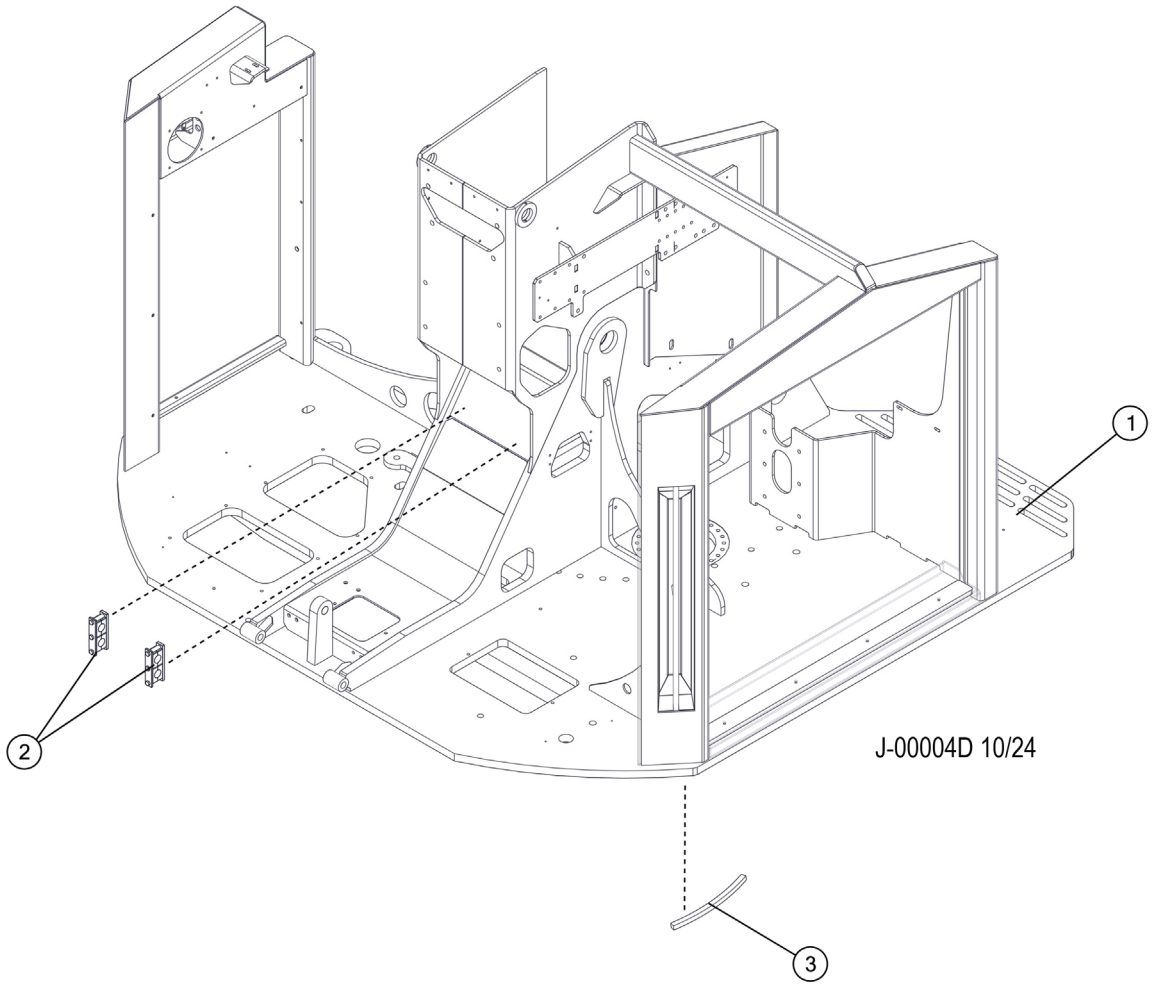

Item	Part #	Description	Qty.
1	47995	WELDMENT, D-UPPER W/SURROUNDS (755)	1
2	58050	BRACKET, HOSE CLAMP	2
3	48671	SHROUD, BEARING	1

J100-00006 - SIDE DECK, HD

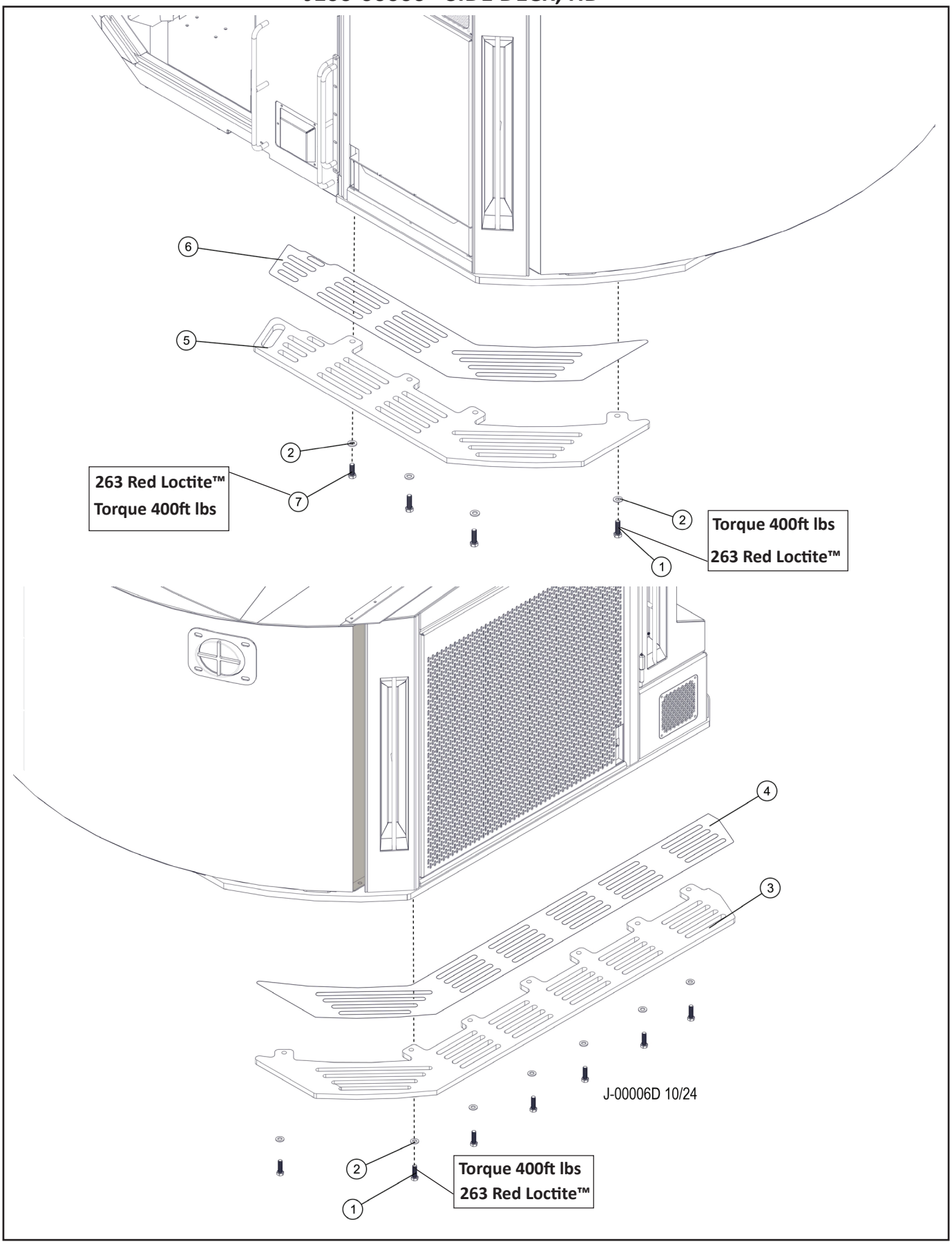

J100-00006 - SIDE DECK, HD

Item	Part #	Description	Qty.
1	10775	BOLT - .75” X 2.5” **263 RED LOCTITE™ (TORQUE 400FT LBS)**	10
2	15550	WASHER, SAE FLAT - .75”	11
3	60764	CATWALK, CAB SIDE - RH 755	1
4	60989	TAPE, 755 COOLER SIDE CAT-WALK GRIP	1
5	60763	CATWALK, CAB SIDE - LH 755	1
6	60988	TAPE, 755 CAB SIDE CAT-WALK GRIP	1
7	15549	BOLT - .75” X 2.0” **263 RED LOCTITE™ (TORQUE 400FT LBS)**	1

J100-00006 - KIT, FRONT STEP EXT - EU

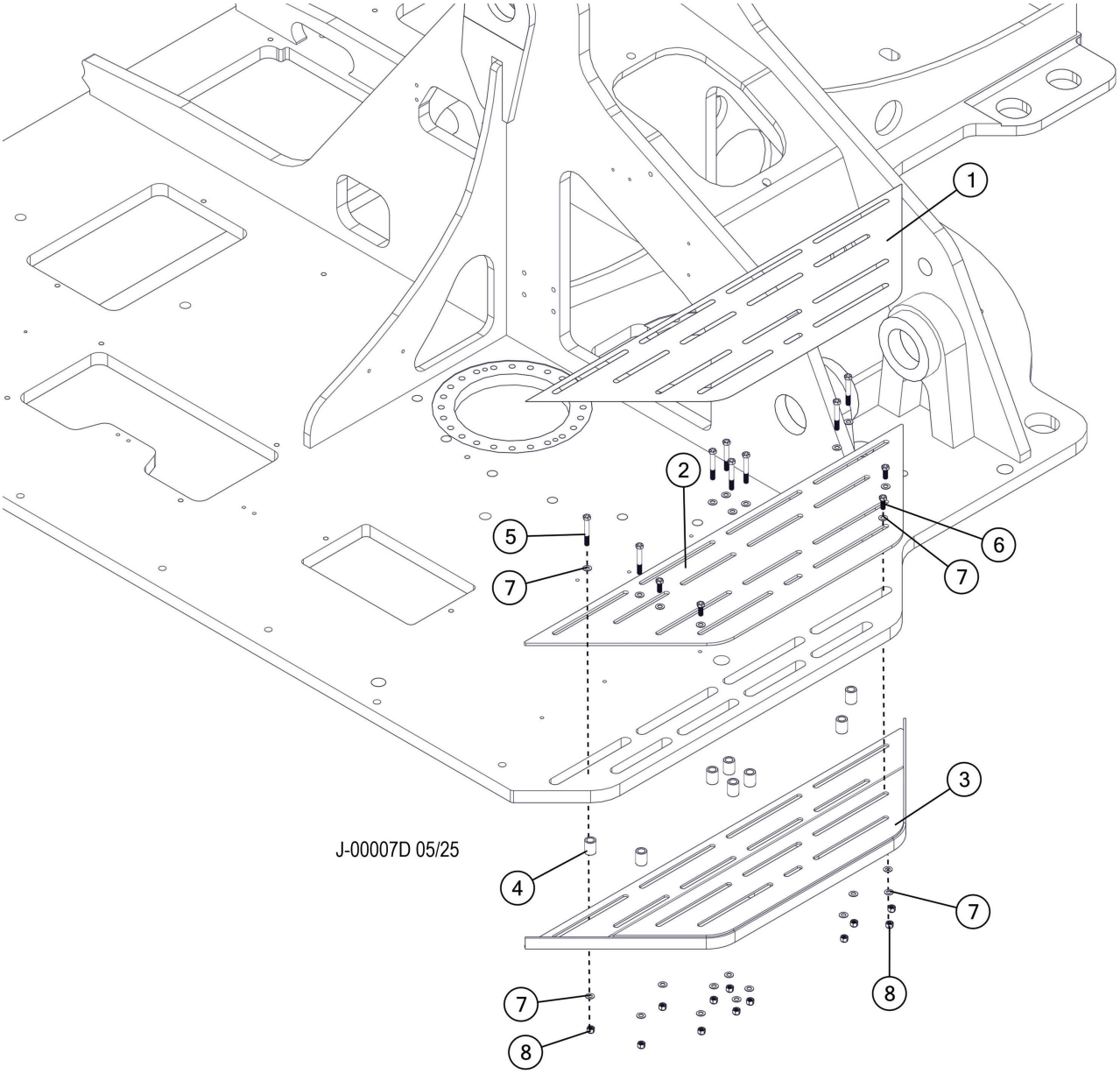

Item	Part #	Description	Qty.
1	659940	NON-SKID TAPE, FRONT STEP EXT~EU	1
2	60792	PLATE, AUX FRONT STEP TOP	1
3	60791	WELDMENT, AUX FRONT STEP	1
4	607990	SPACER, 0.625 X 0.965 X 1.25 LG	8
5	16365	BOLT - .375" X 2.75"	8
6	11707	BOLT - .375" X 1"	4
7	10802	WASHER, FLAT - .375"	24
8	10813	NUT, LOCK - .375"	12

J200-00100 - AUTO GREASE HOSES

NOTE: HYDRAULIC FITTINGS GET 545 LOCTITE™

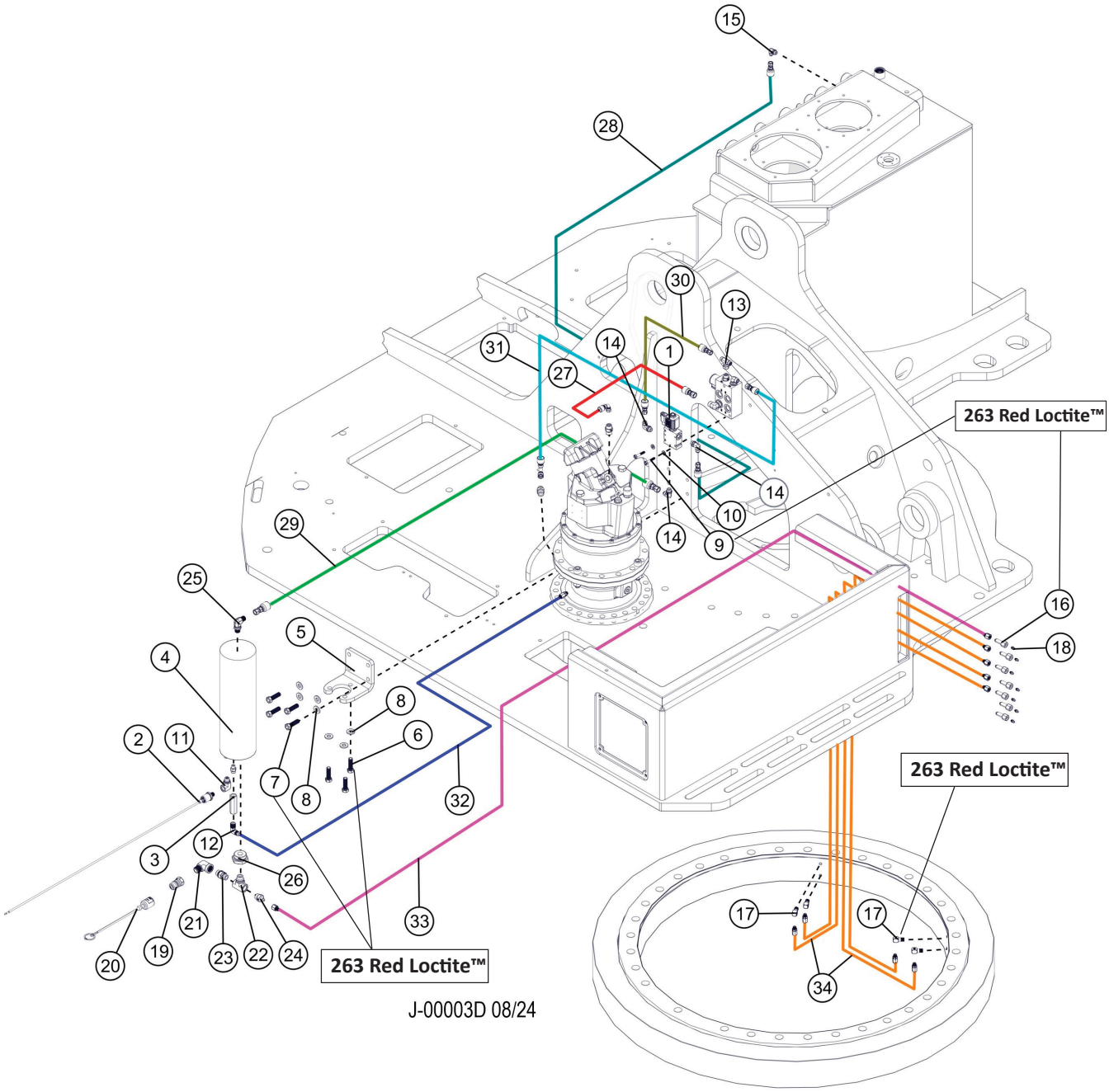

J200-00100 - AUTO GREASE HOSES

Item	Part #	Description	Qty.
1	57509	VALVE, AUTO GREASE SYSTEM	1
2	57596	TRANSDUCER, PRESSURE - GREASE SYSTEM	1
3	57498	VALVE, CHECK - ORIFICE GREASE SYSTEM	1
4	57303	ACCUMULATOR, GREASE SYSTEM	1
5	48344	PLATE, GREASE TUBE MOUNT	1
6	59121	BOLT - 1/2-20 X 1.75" **263 RED LOCTITE™**	3
7	18933	BOLT - .5" X 1.75" **263 RED LOCTITE™**	4
8	15534	WASHER, SAE FLAT - .5"	7
9	15575	BOLT - .25" X 1.5" **263 RED LOCTITE™**	2
10	10757	WASHER, SAE FLAT - .25"	2
11	58348	FITTING, ELBOW 6-AOEG5-5	1
12	58350	FITTING, ELBOW 4-4-CTX-S	1
13	23541	TEE - 4 S6LO-S	1
14	15133	ELBOW, 90 - FF1868T-0406S	3
15	52454	ELBOW, 90 4 -8 **263 RED LOCTITE™**	1
16	15658	CONNECTOR, STR BULKHEAD - 2239-2-4S	3
17	22281	ELBOW, 1/8-27 NPTF(M), 1/8-17 NPTF(F),90 **263 RED LOCTITE™**	4
18	59122	ZERK, GREASE - 1/8" ST	7
19	17307M	QUICK DISCONNECT - .5" (MALE)	1
20	17323F	COVER, DUST - QUICK DISCONNECT (FEMALE)	1
21	17460	ELBOW, 90 STREET - 5502-8-8	1
22	22229	TEE - 8-G5G5JAO-S	1
23	51932	CONNECTOR, STR - 6403-08	1
24	55700	FITTING, STRAIGHT - 4-8 F5OX-S	1
25	57586	ELBOW, 90 4-5 GREASE ACCUMULATOR	1
26	57815	BUSHING, REDUCER 20-8 F5OG5-S	1
27	65953	HOSE, HYD, 187TC36 08-08OS-08O9	1
28	65860	HOSE, HYD, 387TC110 04-04OS-04OS	1
29	65865	HOSE, HYD, 387TC14 04-04OS-04OS	1
30	65866	HOSE, HYD, 387TC16 04-04OS-04OS	1
31	65954	HOSE, HYD, 387TC29 04-04OS-04O4	1
32	65869	HOSE, HYD, HLBD21 02-02PS-04JS-SW	1
33	65870	HOSE, HYD, HLBD43 02-02PS-04JS-SW	1
34	65871	HOSE, HYD, HLBD65 02-02PS-04JS-SW	4
*	59078	KIT, FITTING 755 AUTO GREASER (ITEM 19 - 26)	1
*	58180	KIT, HOSE 755 GREASE SYSTEM (ITEM 28 - 36)	1

OPERATORS COMPARTMENT AND CONTROL SYSTEM - (K)

K100-00000 - CABIN SEAT, SEATS INC

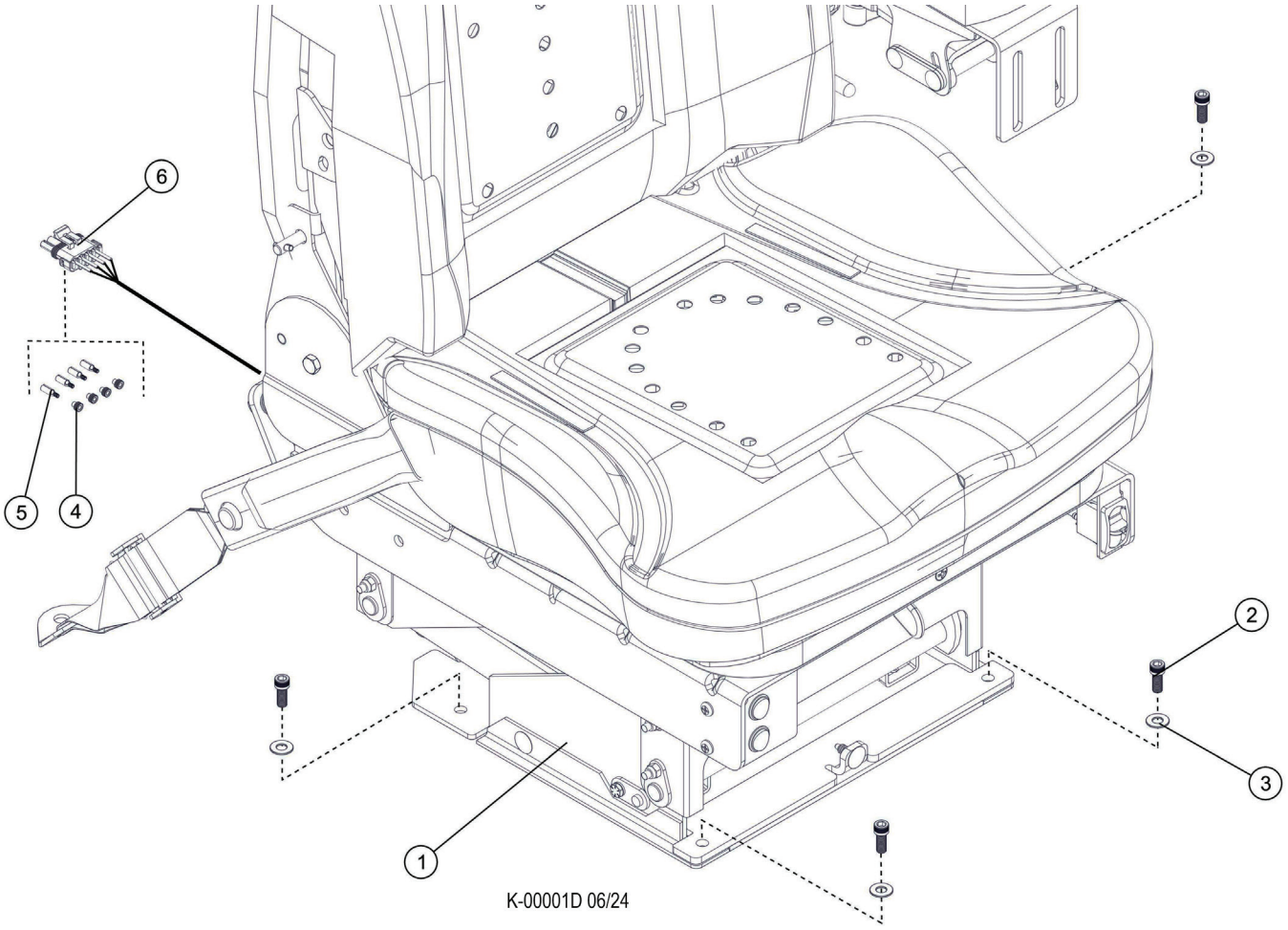

Item	Part #	Description	Qty.
1	57723	SEAT ASSY - SEAT INC. (HEAT/VENT)	1
2	58383	BOLT - .5/16-18 X 3/4’ SOCKET HEAD	4
3	15559	WASHER, SAE FLAT - .3125”	4
4	22225	SEAL, WIRE END (WEATHER PACK)	4
5	23135	TERMINAL, FEMALE (WEATHER PACK)	1
6	23131	PLUG, FEMALE - 4 CONTACT (WEATHER PACK)	

K100-00001 - CABIN SEAT, SEATS INC

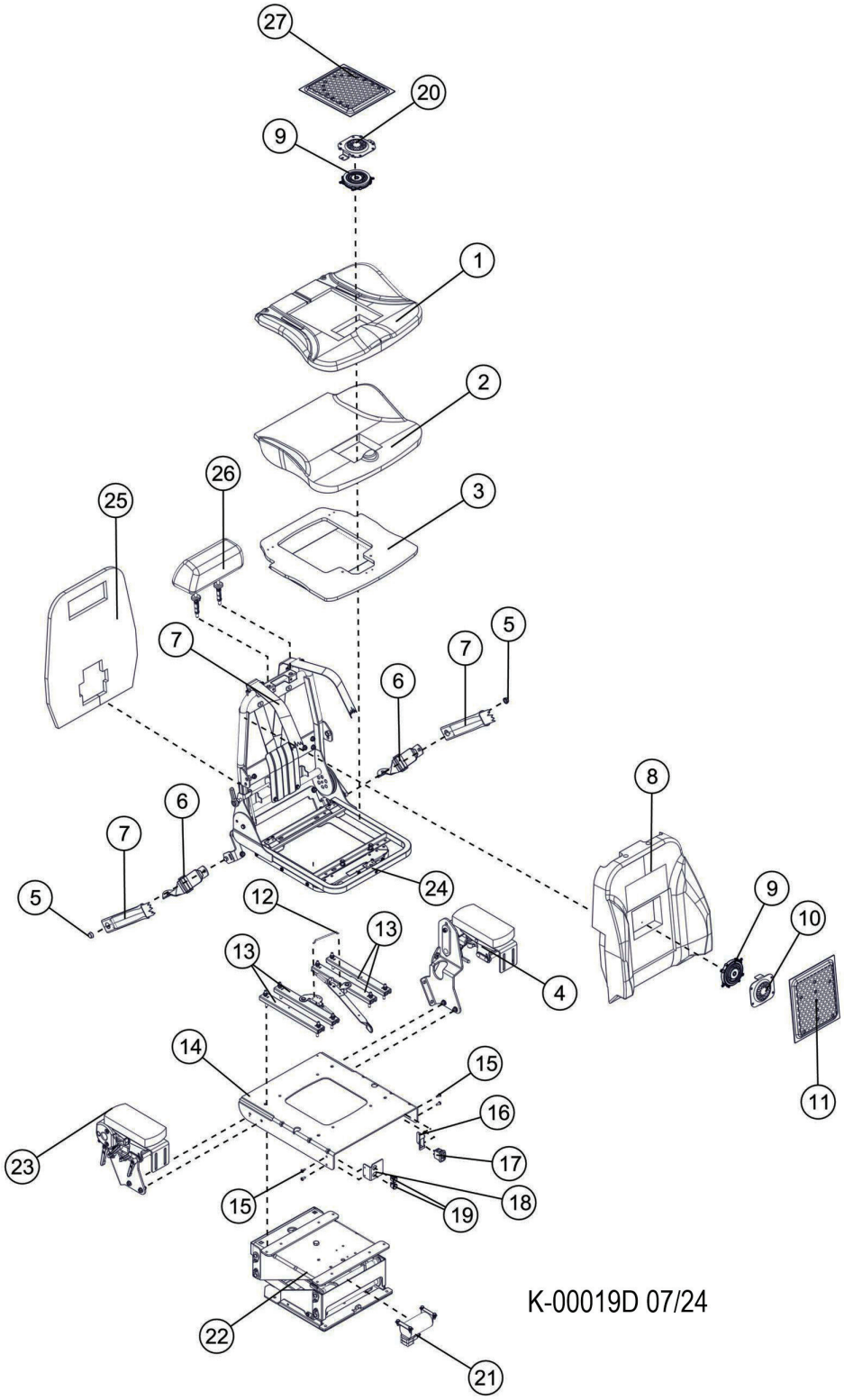

K100-00001 - CABIN SEAT, SEATS INC

Item	Part #	Description	Qty.
	57723	SEAT ASSY - SEAT INC. (HEAT/VENT)	1
1	517866-00	CUSHION, SEAT	1
2	517865-00	BASE, SEAT	1
3	517867-00	SEAT BOTTOM	1
4	188381JN348	ARMEST, LH	1
5	708696-00	SEATBELT PLUG	2
6	704876-00	SEATBELT TETHER ASSEMBLY	2
7	782938-00	SEATBELT	1
8	518065	BACKREST	1
9	703836-02	HEATER	2
10	516431-02	SEAT BASE COVER, FAN	1
11	312771283283-00	BACKREST HEATER FILTER	1
12	506856-02	ADJUSTMENT PIN	1
13	53296	ADJUSTMENT BRACKET ASSEMBLY	1
14	314422-00	LOWER FRAME ASSEMBLY	1
15	22068	SCREW, MACHINE - .25” X .625’	4
16	512784	BRACKET	4
17	55999	SWITCH, AIR RIDE	1
18	518050-00	BRACKET	1
19	782434	SWITCH	2
20	517637-00	BACKREST COVER, FAN	1
21	109879PS	COMPRESSOR PUMP	1
22	314434	SEAT FRAME BASE ADJUSTMENT ASSEMBLY ARMEST, RH	1
23	188382JN348	ARMEST, RH	1
24	314433-00	SEAT FRAME	1
25	703661-01	BACKREST PANEL	1
26	55994	HEADREST	1
27	55998	SEAT BASE HEATER FILTER	1
*	55995	AIR SPRING ASSEMBLY KIT	1
*	55997	SHOCK ASORBER HEAVY DUTY	1

***MEANS NOT SHOWN**

K100-00002 - CABIN SEAT, SEATS INC

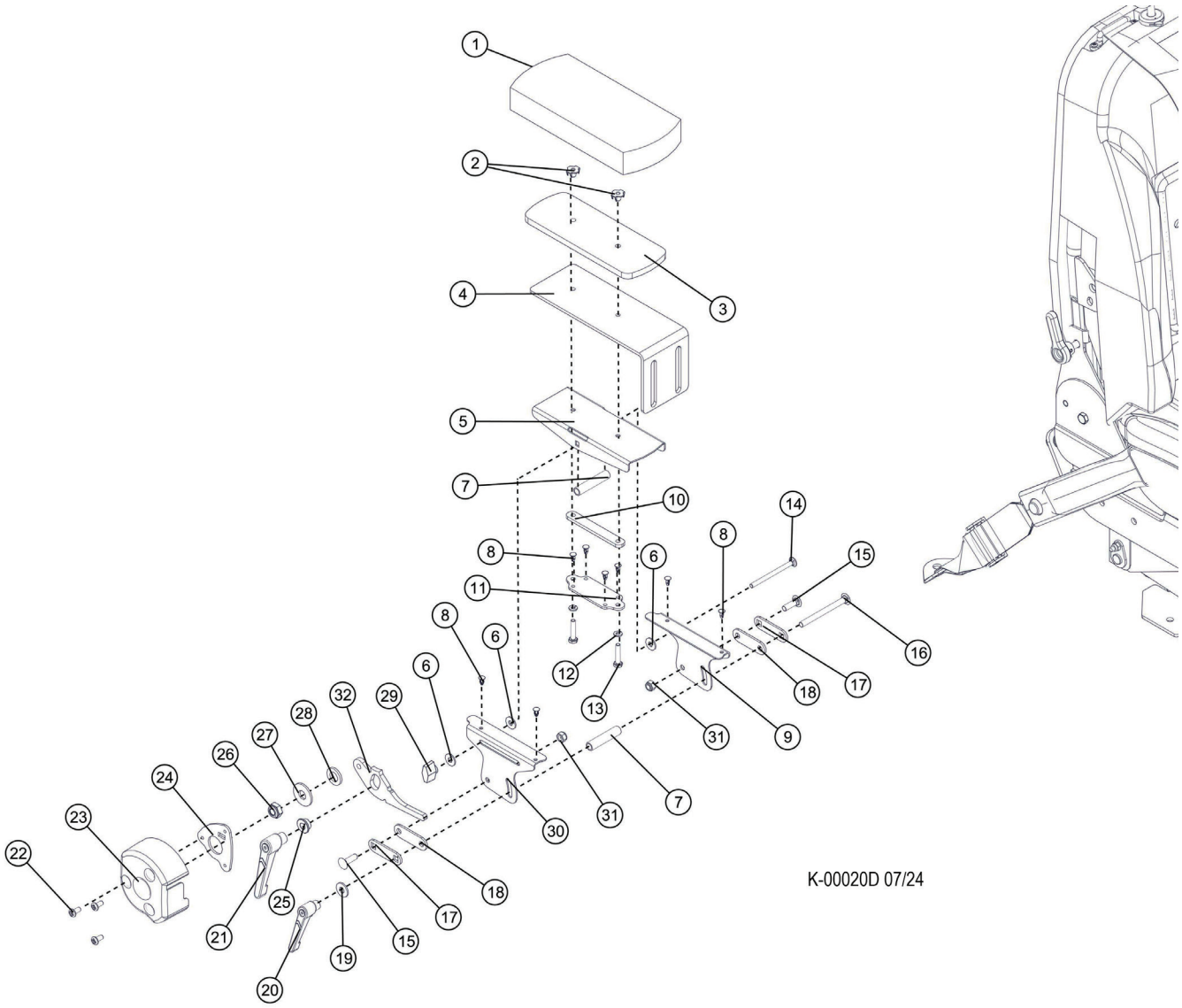

K100-00002 - CABIN SEAT, SEATS INC

Item	Part #	Description	Qty.
	188382JN348	ARM REST, SITTAB ARMFLEX - RH	1
	188381JN348	ARM REST, SITTAB ARMFLEX - LH	1
1	703848-01	PAD	1
2	707029	NUT	2
3	516610-01	PLATE	1
4	518072-00	COVER	1
5	518071-00	PLATE	1
6	782549	WASHER	2
7	516609	SPACER	2
8	782506-00	PLASTIC INSERT	8
9	516607	BRACKET	1
10	516611-00	PLATE	2
11	516612-00	STOP	1
12	707085	BUSHING	1
13	719644	BOLT	1
14	55891	FASTENER	1
15	719744	MOUNT FASTENER	2
16	782501-00	FASTENER	1
17	516605-01	PLATE	2
18	782531	SPACER	2
19	782013	BUSHING	1
20	782504-00	HANDLE	1
21	708801	HANDLE	1
22	782552	BOLT	1
23	782509-04	COVER	1
24	314429-00	SPACER	1
25	511880PL-02	BUSHING	1
26	707116	NUT	1
27	782042	WASHER	1
28	707871	WASHER	1
29	782505	KNOB	1
30	516606	BRACKET	1
31	707314	NUT	2
32	517183-02	ADJUSTMENT LEVER	1

K100-00003 - CABIN SEAT, SEATS INC

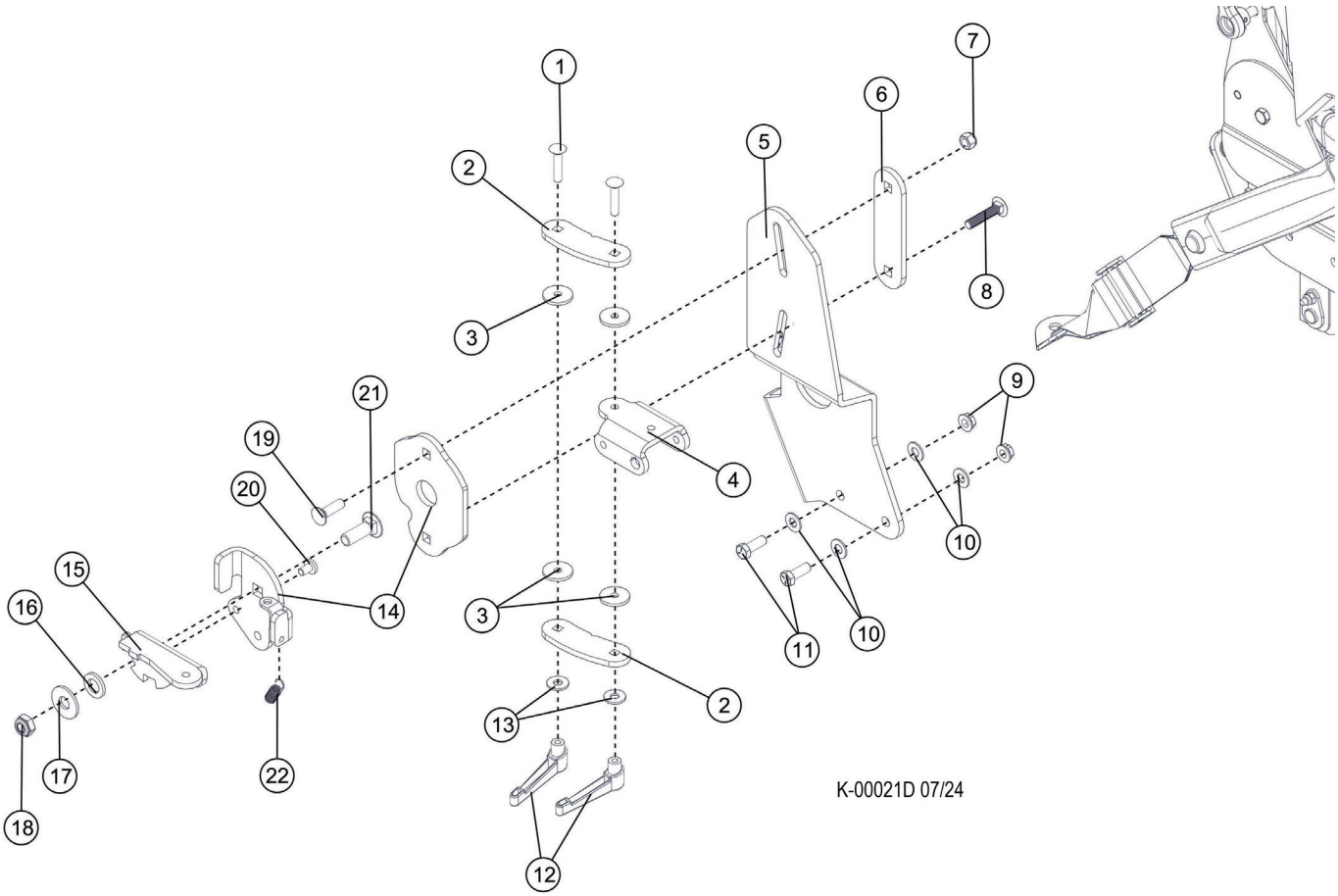

Item	Part #	Description	Qty.
	188382JN348	ARM REST, SITTAB ARMFLEX - RH	1
	188381JN348	ARM REST, SITTAB ARMFLEX - LH	1
1	719750	FASTENER	2
2	518075	BRACKET	2
3	782530-00	BUSHING	4
4	516603-03	BRACKET	1
5	518081-00	BRACKET	1
6	516599-00	BRACKET	2
7	707251-2	NUT	1
8	708856-00	BOLT	1
9	707565	NUT	2
10	782550	WASHER	4
11	707195	BOLT	2
12	782504	HANDLE	2
13	782013	WASHER	2
14	314428-00	BRACKET	1
15	314429-00	BRACKET	1
16	707871	WASHER	1
17	782042	WASHER	1
18	707116	NUT	1
19	782551	BOLT	1
20	517182	BOLT	1
21	782502-00	BOLT	1
22	708830AA	SPRING	1

K-2241300 - CABIN SEAT - BE-GE

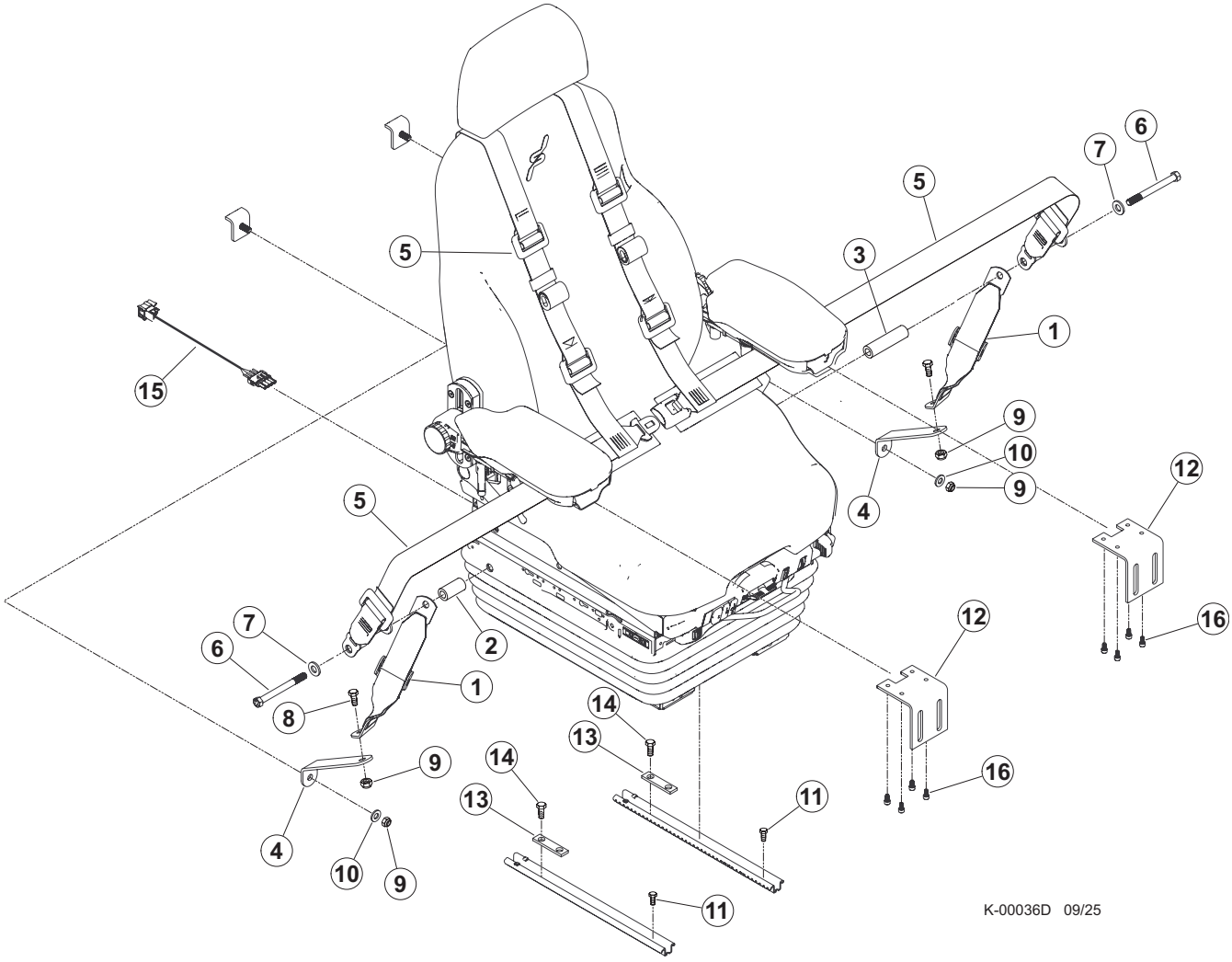

Item	Part #	Description	Qty.
	57840	SEAT ASSEMBLY (BE-GE W/ HEAT/VENT/3 PT)	1
1	53948	TETHER, SEAT HOLD DOWN (PAIR)	1
2	-	SPACER - SHORT	1
3	-	SPACER - LONG	1
4	60566	EXTENSION, SEAT TETHER	2
5	610623	SEAT BELT ASSEMBLY	1
6	58385	BOLT - 7/16-20 X 4.5” HEX HEAD	2
7	10803	WASHER, FLAT - .4375”	2
8	10783	BOLT - .5” X 1”	2
9	10815	NUT, LOCK - .5”	4
10	15534	WASHER, SAE FLAT - .5”	2
11	53906	BOLT, ALLEN HEAD - .3125” X .5”	2
12	46845	BRACKET, JOYSTICK POD MOUNT - KAB	2
13	690700	WASHER. SEAT	2
14	58383	BOLT - .5/16-18 X 3/4’ SOCKET HEAD	2
15	57935	HARNESS, BE-GE SEAT ADAPTER	1
16	16134	BOLT, ALLEN HEAD - 6MM X 12MM	8

K100-00011 - CABIN SEAT - BE-GE

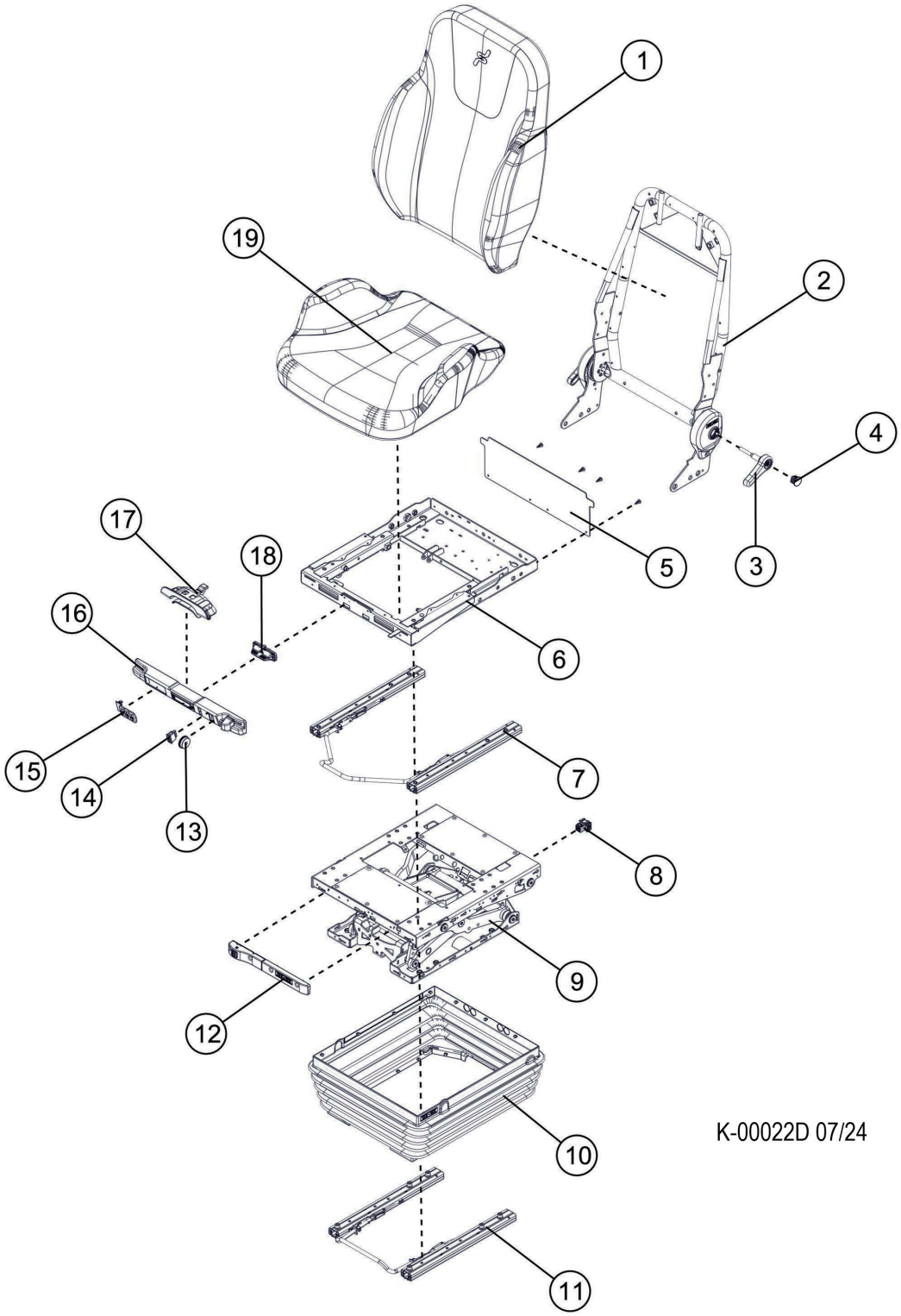

K100-00011 - CABIN SEAT - BE-GE

Item	Part #	Description	Qty.
	57840	SEAT ASSEMBLY, SEATS INC. HEAT / AIR RIDE	1
1	632104P	SEAT BACK CUSION	1
2	632007P	UPPER FRAME ASSEMBLY	1
3	628833	SEAT BACK ADJUSTMENT LEVER	2
4	628834	LEVER CAP	2
5	632080P	FRAME BASE BACKER (WITH 4 SCREWS)	1
-	632079	FRAME BASE BACKER (ONLY)	1
6	632004P	LOWER FRAME ASSEMBLY	1
7	632082P	SEAT LATERAL ADJUSMENT LEVER ASSM.	1
8	632198P	SEAT CONTROLS CIRCUIT BREAKER	1
9	632220P	FRAME BASE VERTICAL ADJUSMENT LEVER ASSM.	1
10	632179P	COVER, AIR RIDE	1
11	632248P	LEVER, OVERALL SEAT/LOWER ASSEMBLY LATERAL ADJUSTMENT	1
12	632292P	COVER, SHOCK OBSORBER	1
13	631931	SWITCH, AIR VENT	1
14	660590	SWITCH, HEAT TEMP. CONTROL	1
15	632017P	SWITCH, LUMBAR/AIR SIDE-SHOULDER CONTROLS	1
16	632005P	COVER, SEAT CONTROLS UPPER	1
17	631305P	SEAT BASE LATERAL ADJUSTMENT	1
18	631999	SEAT HEIGHT ADJUSTMENT	1
19	632100P	SEAT BASE CUSHION	1
*	55996	AIR SPRING	1
*	56019	GAS SPRING	1
*	56020	COMPRESSOR, SEAT	1
		***MEANS NOT SHOWN**	

K100-00020 - CABIN DOORS

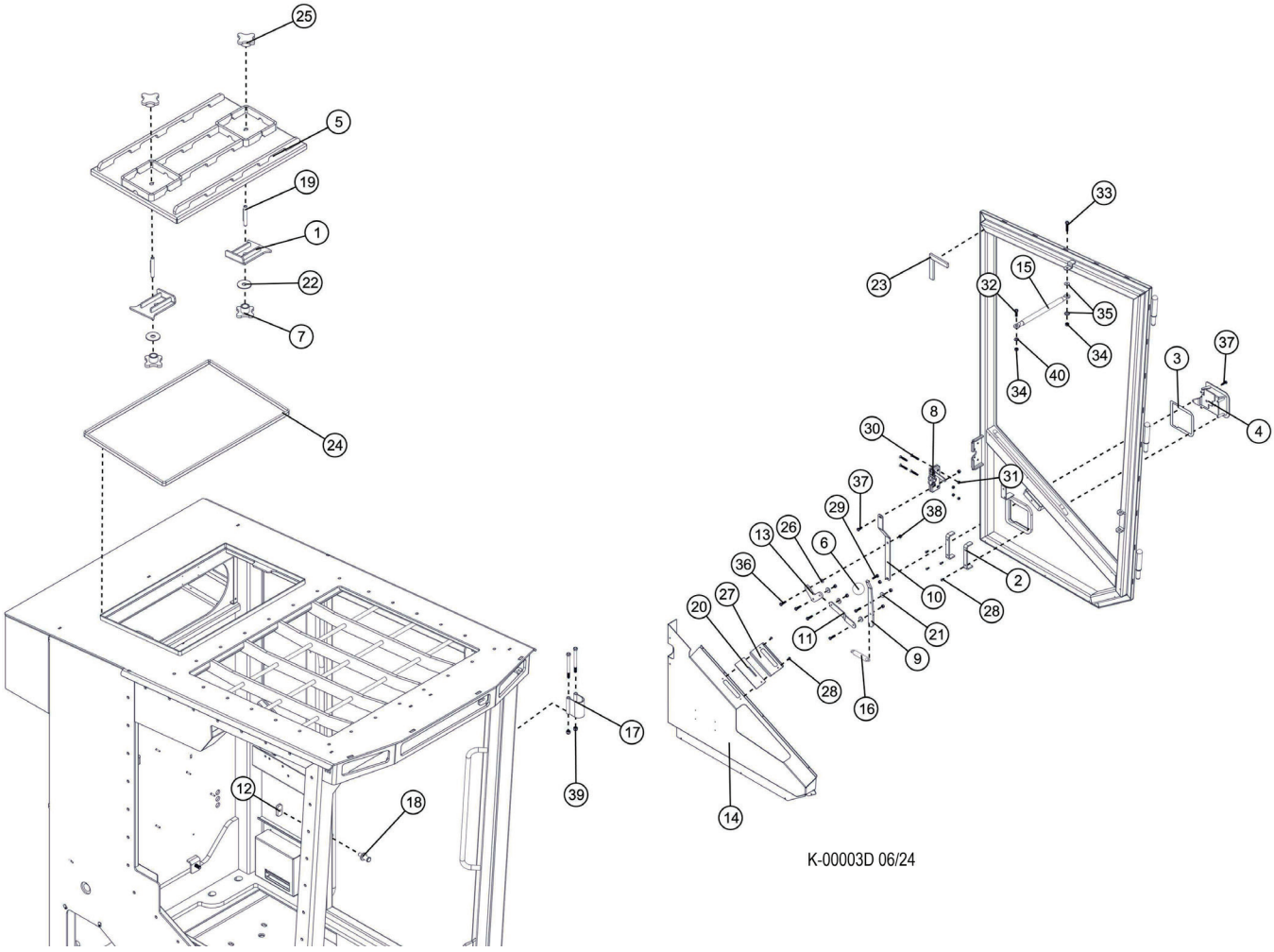

K-00003D 06/24

K100-00020 - CABIN DOORS

Item	Part #	Description	Qty.
1	49509	BRACKET, ESCAPE HATCH - D CAB	2
2	47454	BRACKET, PADDLE HANDLE	2
3	57863	GASKET, HANDLE - OUTSIDE CAB DOOR	1
4	55015	HANDLE, DOOR - OUTSIDE - RH CAB B/D SER	1
5	49190	HATCH, ESCAPE TOP CAB - D SERIES	1
6	57826	KNOB, DOOR HANDLE - ROUND BALL **S/N: UP TO 1270**	1
6	703210	KNOB, DOOR HANDLE, .375-24 THREAD, 1.375, DIA **S/N: 1270 & FORWARD**	1
7	49511	KNOB. STAR	2
8	55118	LATCH, DOOR - B/D SERIES (INNER) (RH CA	1
9	49210	LEVER, DOOR RELEASE **S/N: UP TO 1270**	1
9	693380	LEVER, DOOR RELEASE **S/N: 1270 & FORWARD**	1
10	49200	LINK, DOOR ACTUATOR - VERTICAL	1
11	49209	LINK, DOOR LATCH	1
12	62127	MOUNT, STRIKER (1050594)	1
13	47456	PIVOT LINK, DOOR LATCH	1
14	49201	SCHROUD, DOOR - FORMED	1
15	55121	SHOCK, GAS - CAB DOOR “C/D” SERIES	1
16	57900	SPRING, INNER DOOR TENSION - D-SERIES	1
17	57855	STRAP, DOOR - D-SERIES CAB	1
18	49175	STRIKER, STUD - C-SERIES CAB	1
19	49516	STUD, 2 WAY - D CAB	2
20	49213	TRIM, RUBBER INNER DOOR HANDLE - D-SERIE	1
21	57827	WASHER, PLASTIC 1/4” (CAB)	4
22	57828	WASHER, RUBBER - 3/4” (CAB)	2
23	18126	WEATHERSTRIPPING, RUBBER-DOOR SEAL	A/R
24	24925	CHANNEL, EDGE PROTECTOR - 3/16”BULB(STR)	10
25	49514	KNOB, STAR D CAB	2
26	57832	PLASTIC WASHER	1
27	49212	PLATE, SLOTTED - D CAB	1
28	59139	SCREW, MACHINE - #10-24 X .5” (BUTTON)	6
29	23264	BOLT - .25” X .5” **S/N: UP TO 1270**	1
29	69074	BOLT, HHCS, .38-24 X 0.75 GR5 **S/N: 1270 & FORWARD**	1
30	59120	BOLT, FLAT HEAD .25-20NC X 1.50LG GR.5	4
31	16131	NUT, NYLOCK - #10-24	4
32	15589	BOLT - .3125” X 1”	1
33	15591	BOLT - .3125” X 1.5”	1
34	10812	NUT, LOCK - .3125”	2
35	59099	BALL JOINT ROD END INSERT, 5/16 ID	2
36	15576	BOLT - .25” X 1”	5
37	15604	BOLT - .25” X .75”	2
38	10811	NUT, LOCK - .25”	7
39	10813	NUT, LOCK - .375”	2
40	10801	WASHER, FLAT - .3125”	1

K100-00030 - CABIN WINDOWS

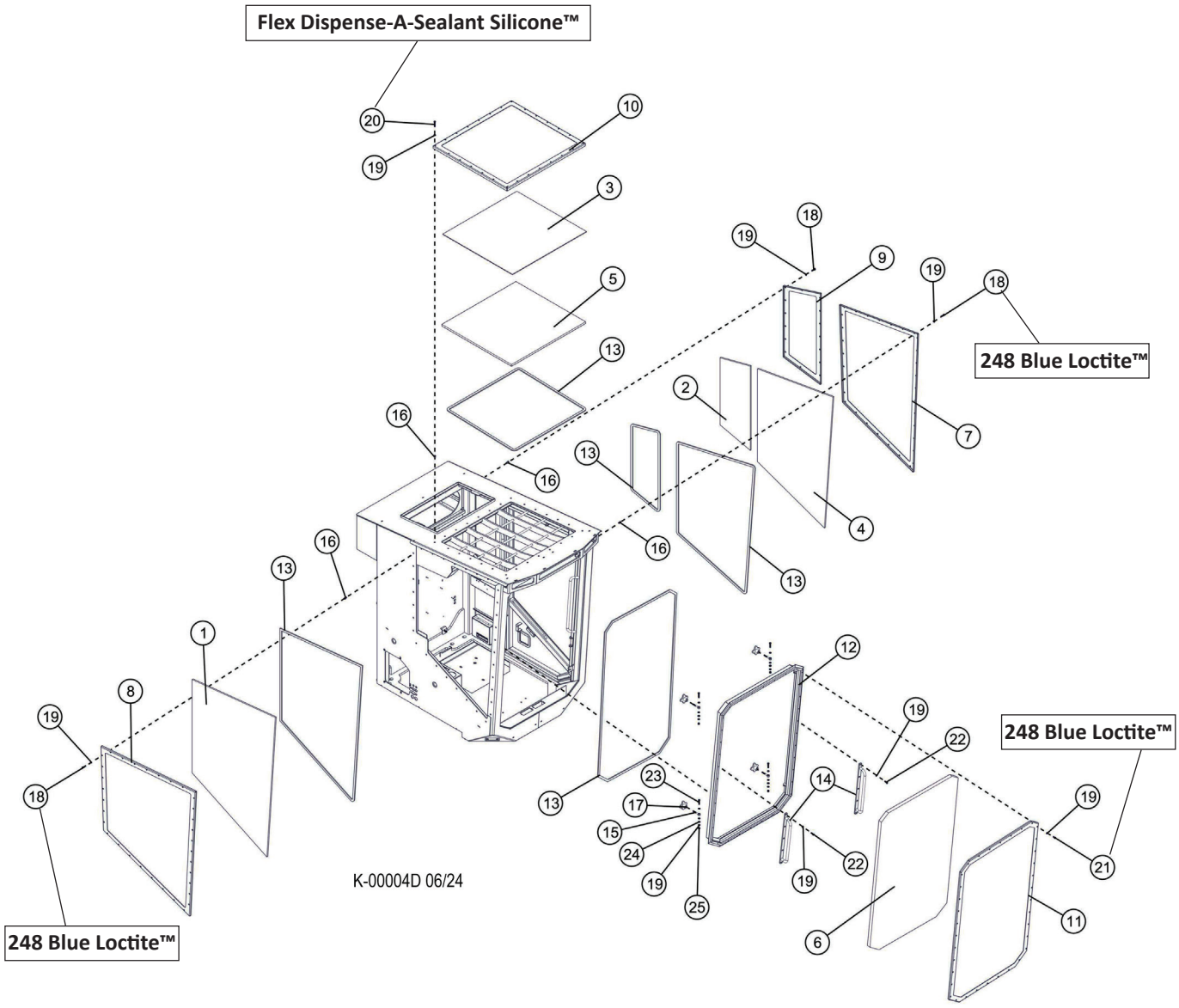

K100-00030 - CABIN WINDOWS

Item	Part #	Description	Qty.
1	49339	LEXON, BOOM SIDE D-SERIES	1
2	49370	LEXON, REAR CAB WINDOW .5 THK OPERA	1
3	49532	LEXAN, SKYLIGHT - 3/16” - D	1
4	49215	LEXON, DOOR - D SERIES	1
5	49216	LEXON, SKYLIGHT - 3/4” D-SERIES	1
6	49347	LEXON, FRONT WINDOW - 1.25” D-SERIES	1
7	49214	RETAINER, DOOR WINDOW FRAME	1
8	49338	RETAINER, BOOMSIDE WINDOW FRAME	1
9	49371	RETAINER, REAR WINDOW FRAME	1
10	49217	FRAME, SKYLIGHT WINDOW -D	1
11	49359	FRAME - FRONT WINDOW D-SERIES	1
12	49366	WELDMENT, HATCH FRONT WINDOW RETAINER D	1
13	42378FT	WEATHERSTRIPPING, WINDOW 5/16x3/4	83
14	60701	HANDLE, FRONT WINDOW - D-SERIES	2
15	57489	ROD, TIE - FRONT WINDOW FRAME	4
16	49151	INSERT, NUT 3/8”-16 2B MAXTITE - THICK	106
17	49529	KNOB, STAR - D CAB	4
18	10731	BOLT - .375” X 1.5” **248 BLUE LOCTITE™**	80
19	15528	WASHER, SAE FLAT - .375”	154
20	15529	BOLT - .375” X 2” **FLEXSEAL DISPENSE-A-SEALENT SILICONE™**	26
21	15542	BOLT - .375” X .75” **248 BLUE LOCTITE™**	26
22	11707	BOLT - .375” X 1”	10
23	20084	BOLT - .375” X 1.75”	4
24	10813	NUT, LOCK - .375	4
25	98627	WASHER, THICK - .375	4

K100-00040 - CABIN INSULATION

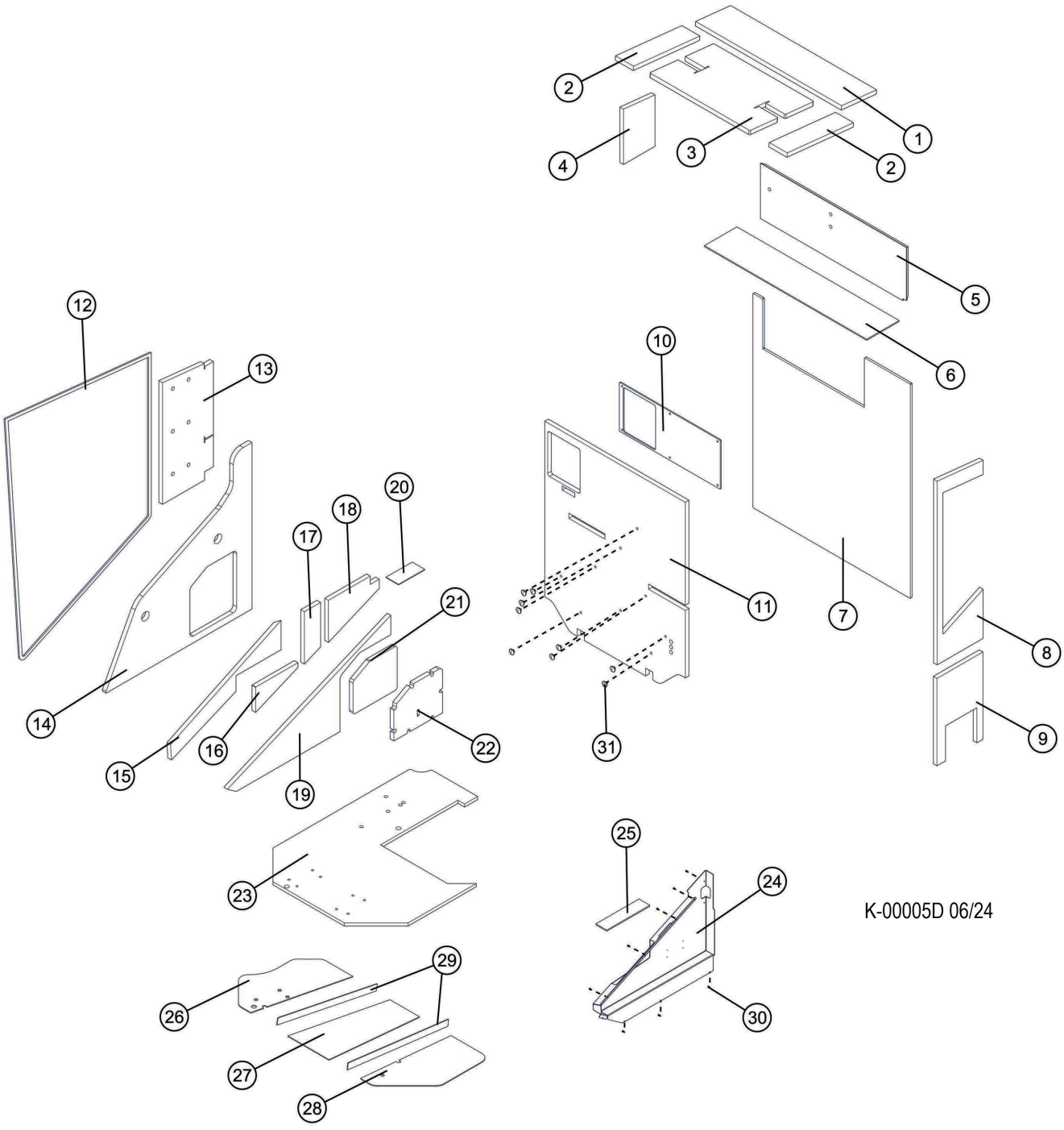

K-00005D 06/24

K100-00040 - CABIN INSULATION

Item	Part #	Description	Qty.
1	49547	FOAM, ACOUSTIC REAR COMPT CEILING - D	1
2	49507	FOAM, ACOUSTIC CEILING - D CAB	2
3	49520	FOAM, ACOUSTIC ESCAPE HATCH - D CAB	1
4	49548	FOAM, ACOUSTIC COMPT SIDE - D CAB	1
5	49546	FOAM, ACOUSTIC REAR COMPT REAR WALL - D	1
6	47147	MAT, RUBBER - C-CAB STORAGE TRAY	1
7	46653	INSULATION, CAB TO UPPER- C SERIES	1
8	49506	FOAM, ACOUSTIC OPERA WINDOW BOTTOM - D	1
9	49545	FOAM, ACOUSTIC REAR COMPT FLOOR - D CAB	1
10	46684	RUBBER, CAB TO ELECRICAL BOX - C MODEL	1
11	49504	FOAM, ACOUSTIC REAR WALL - D CAB	1
12	42378	WEATHERSTRIPPING, WINDOW 5/16x3/4x500’	1
13	49502	FOAM, ACOUSTIC UPPER REAR RH - D CAB	1
14	46651	INSULATION, CAB TO BOOM	1
15	49525	FOAM, ACOUSTIC BOOM SIDE - D CAB	1
16	49526	FOAM, ACOUSTIC BOOM SIDE - D CAB	1
17	49527	FOAM, ACOUSTIC BOOM SIDE - D CAB	1
18	49528	FOAM, ACOUSTIC BOOM SIDE CONSOLE LOWER	1
19	49522	FOAM, ACOUSTIC BOOM SIDE LOWER - D CAB	1
20	58013	RUBBER, MAT - COIN TRAY D-SERIES CAB	1
21	49522	FOAM, ACOUSTIC BOOM SIDE LOWER - D CAB	1
22	49524	FOAM, ACOUSTIC BOOM SIDE HATCH - D CAB	1
23	49550	FLOORMAT, TRACK MACHINE “D” CAB	1
24	49201	SHROUD, DOOR - FORMED	1
25	58012	RUBBER, MAT - CAB DOOR POCKET	1
26	58044	DEADENING, SOUND CAB CAVITY	1
27	58043	DEADENING, SOUND CAB CAVITY	1
28	58041	DEADENING, SOUND CAB CAVITY	1
29	58040	DEADENING, SOUND CAB CAVITY	2
30	22862	SCREW, MACHINE - #10-24 X .5” (BUTTON)	8
31	49503	BUTTON, PUSH ON RETAINER - GRAY #10 STUD	9

K100-00050 - FLOORMAT - FB/TH

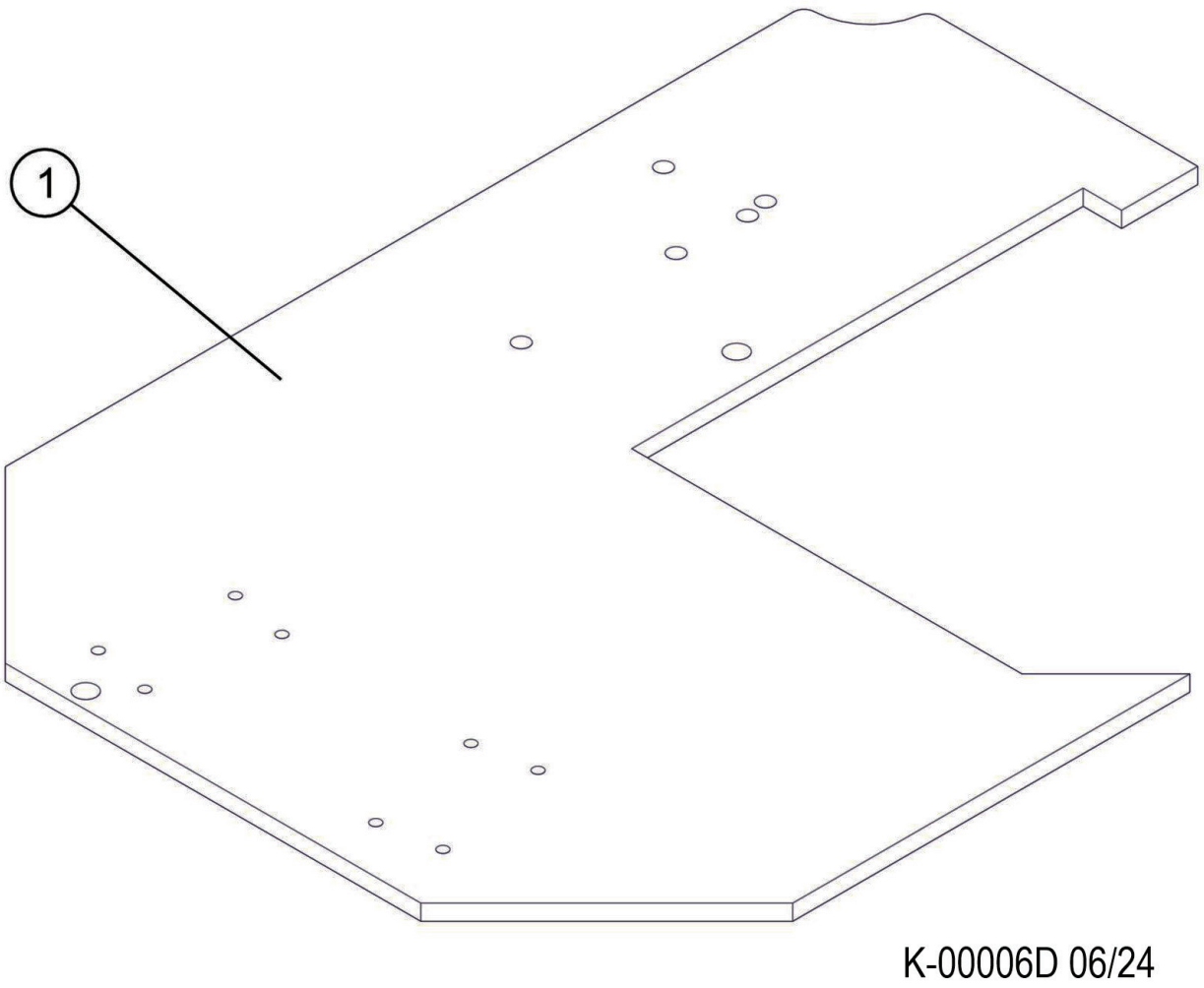

Item	Part #	Description	Qty.
1	49550	CABFLOOR MAT, TRACK MACHINE	1

K100-00060 - CABIN TRIM

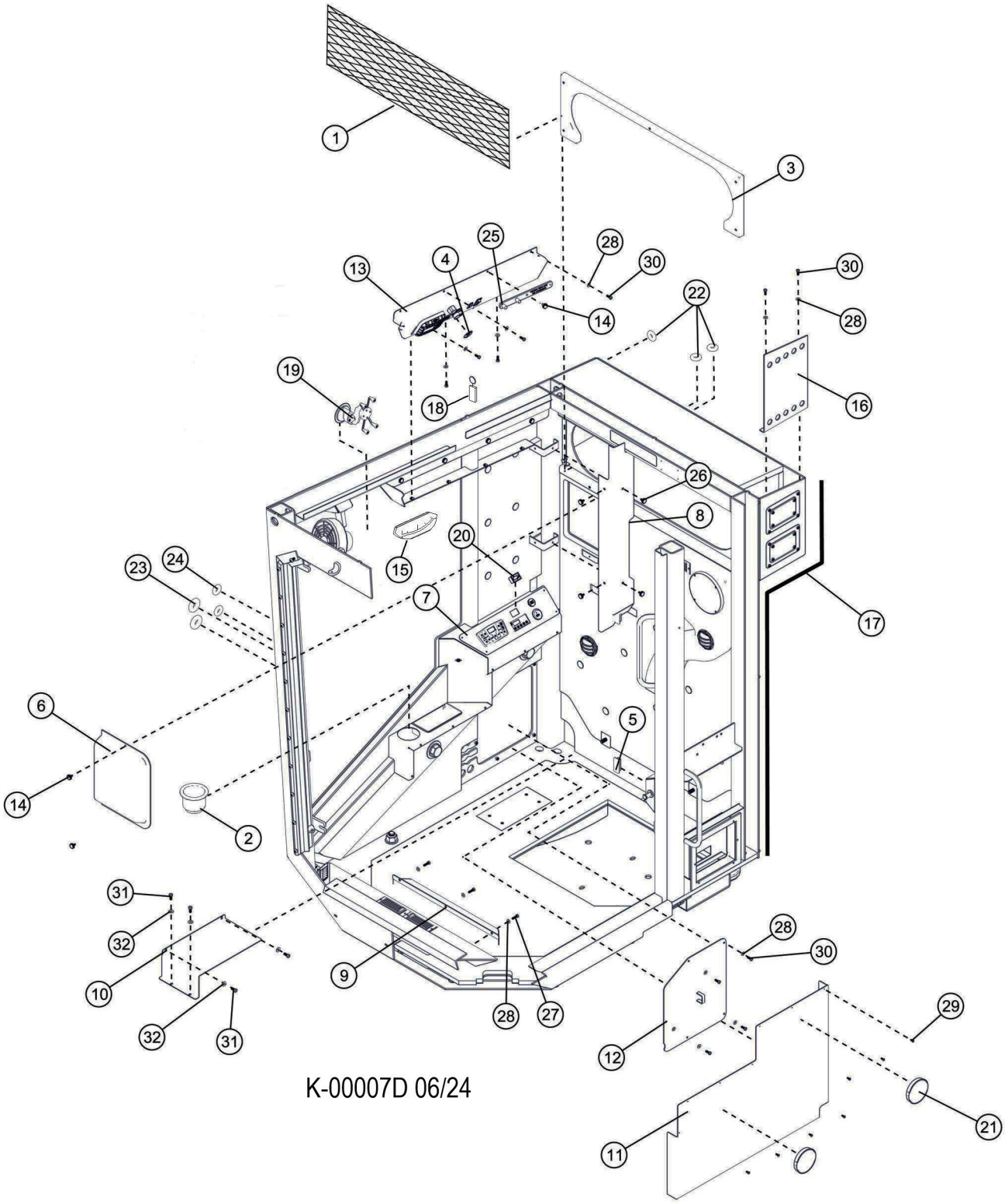

K-00007D 06/24

K100-00060 - CABIN TRIM

Item	Part #	Description	Qty.
1	57388	NET, CARGO STRETCH - C SERIES CAB	1
2	54997	HOLDER, CUP - 735/830-C	1
3	49544	TRIM, REAR COMPARTMENT D-SERIES CAB	1
4	53243	RING, EMERGENCY STOP	1
5	49500	PLUG RECTANGLER TUBE - PLASTIC CAB	1
6	1048246	COVER, PLASTIC FUSE PANEL - D SERIES	1
7	47914	PLATE, DASH - D SERIES	1
8	49538	CONSLE, BOOMSIDE - MIDDLE/VERT - D CAB	1
9	61002	PLATE, PEDAL WIRE - D CAB	1
10	60476	PLATE, COVER	1
11	49111	COVER, SIDE CONSOLE	1
12	49497	COVER, LOWER RB - D CAB	1
13	49540	PANEL, UPPER WELDMENT	1
14	55032	KNOB, THUMB SCREW-1/4-20	3
15	24198	INDICATOR, SLOPE	1
16	49385	GUARD, LIGHTS - REAR TOP	1
17	54050	WEATHERSTRIPPING, RUBBER DOOR SEAL	6
18	57563	KEYCHAIN	1
19	57551	CELL PHONE MOUNT	1
20	52401	HOUR METER	1
21	57816	CAB MOUNTING PLASTIC COVER	2
22	58386	GROMMET	3
23	42514	GROMMET, .875 I.D.	2
24	58387	GROMMET	2
25	52777	WRENCH, STAR KNOB	1
26	59097	BUTTON RETAINER, TRIM PANEL	4
27	23264	BOLT - .25” X .5”	3
28	10757	WASHER, SAE FLAT - .25”	15
29	22862	SCREW, MACHINE - #10-24 X .5” (BUTTON)	7
30	15604	BOLT - .25” X .75”	12
31	15605	BOLT - .3125” X .75”	4
32	15559	WASHER, SAE FLAT - .3125”	4

K100-00065 - CABIN WELDMENT

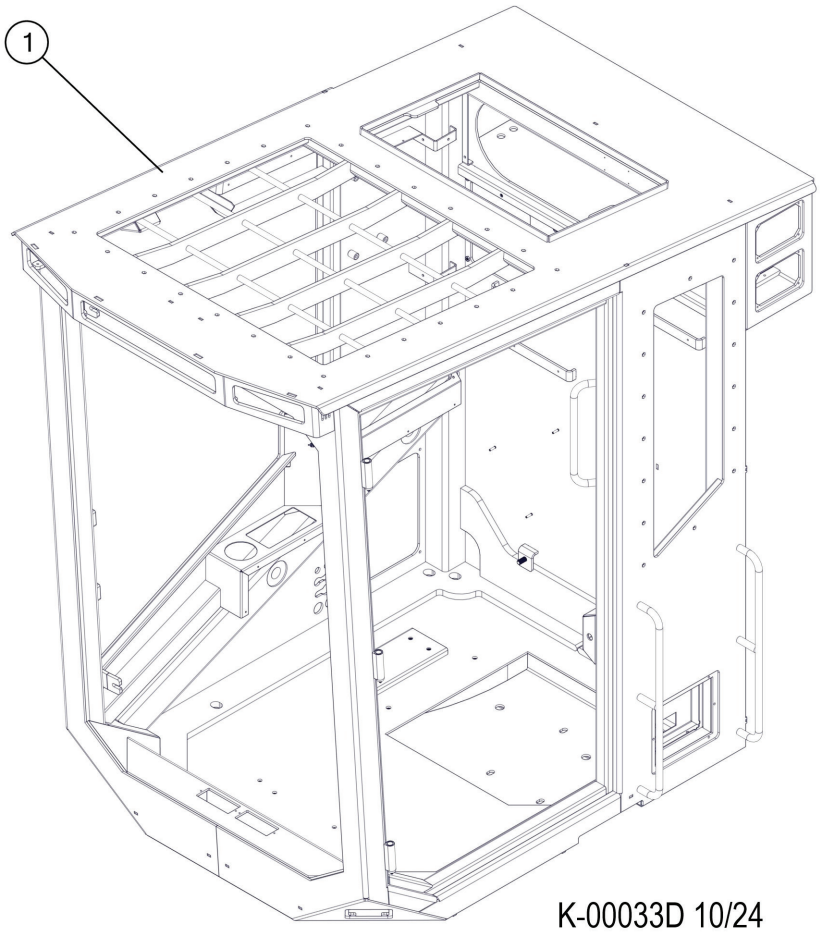

Item	Part #	Description	Qty.
1	49146	CAB ASSEMBLY D-SERIES	1

K100-00070 - CABIN MOUNTING

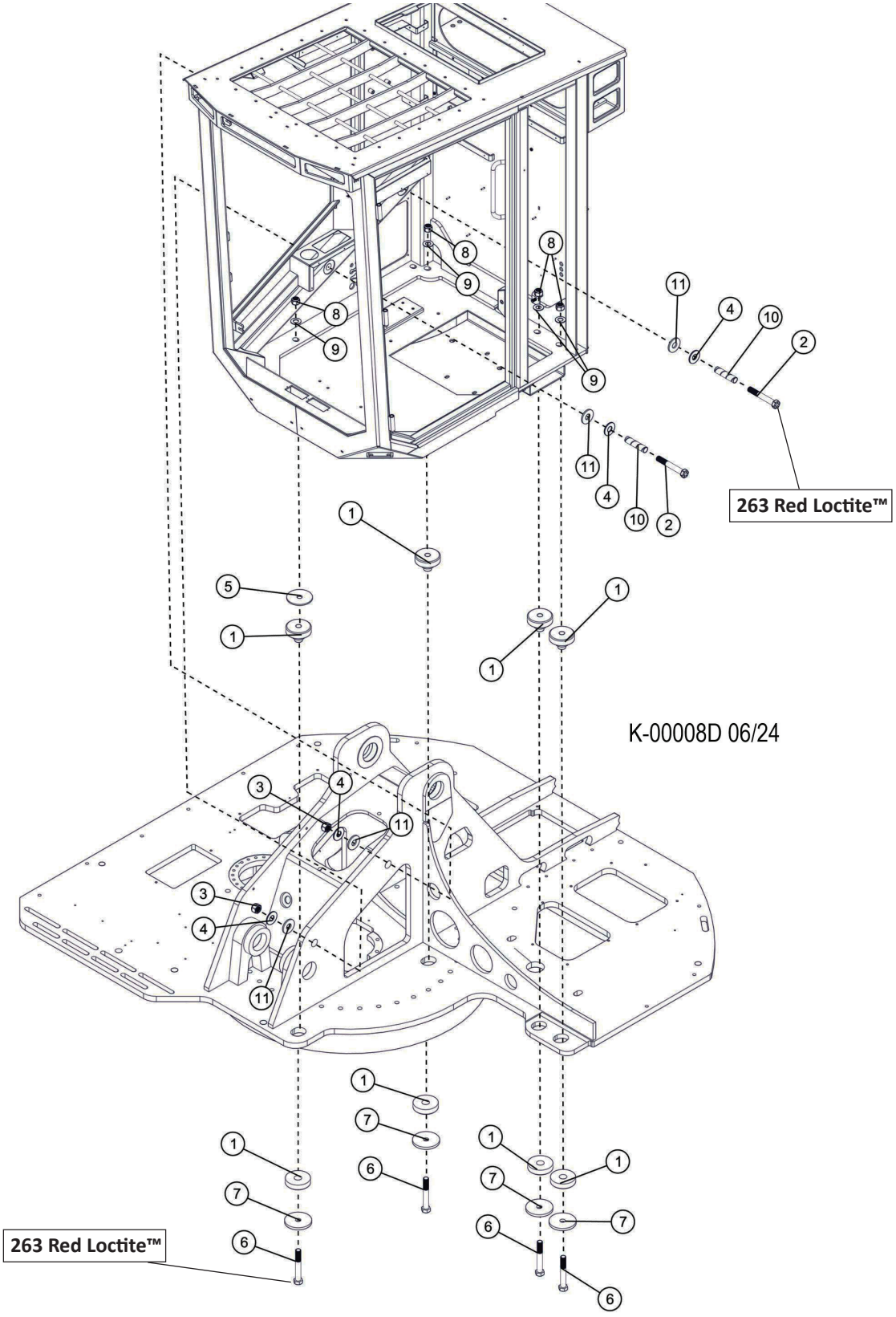

K100-00070 - CABIN MOUNTING

Item	Part #	Description	Qty.
1	18141	ISOLATOR, RUBBER - CAB	4
2	53856	BOLT - 1.125-12 X 7.5” (FINE THREAD) **263 RED LOCTITE™**	2
3	53857	NUT, LOCK - 1.125” (FINE THREAD)	2
4	51320	WASHER, SAE FLAT - 1.125”	4
5	54773	SHIM, CAB MOUNT - 1/4 INCH THICKNESS	1
6	52240	BOLT - 1” X 7” **263 RED LOCTITE™**	4
7	19369	WASHER, CAB MOUNTING ISOLATOR (1/2”)	4
8	18253	NUT, LOCK - 1”	4
9	15579	WASHER, SAE FLAT - 1”	4
10	20843	PROTECTOR, HOSE - SPRIAL (.78”)(BULK)	2
11	17065	WASHER, URETHANE - CAB BOLT	4

K100-00080 - CABIN ENTRY STEP

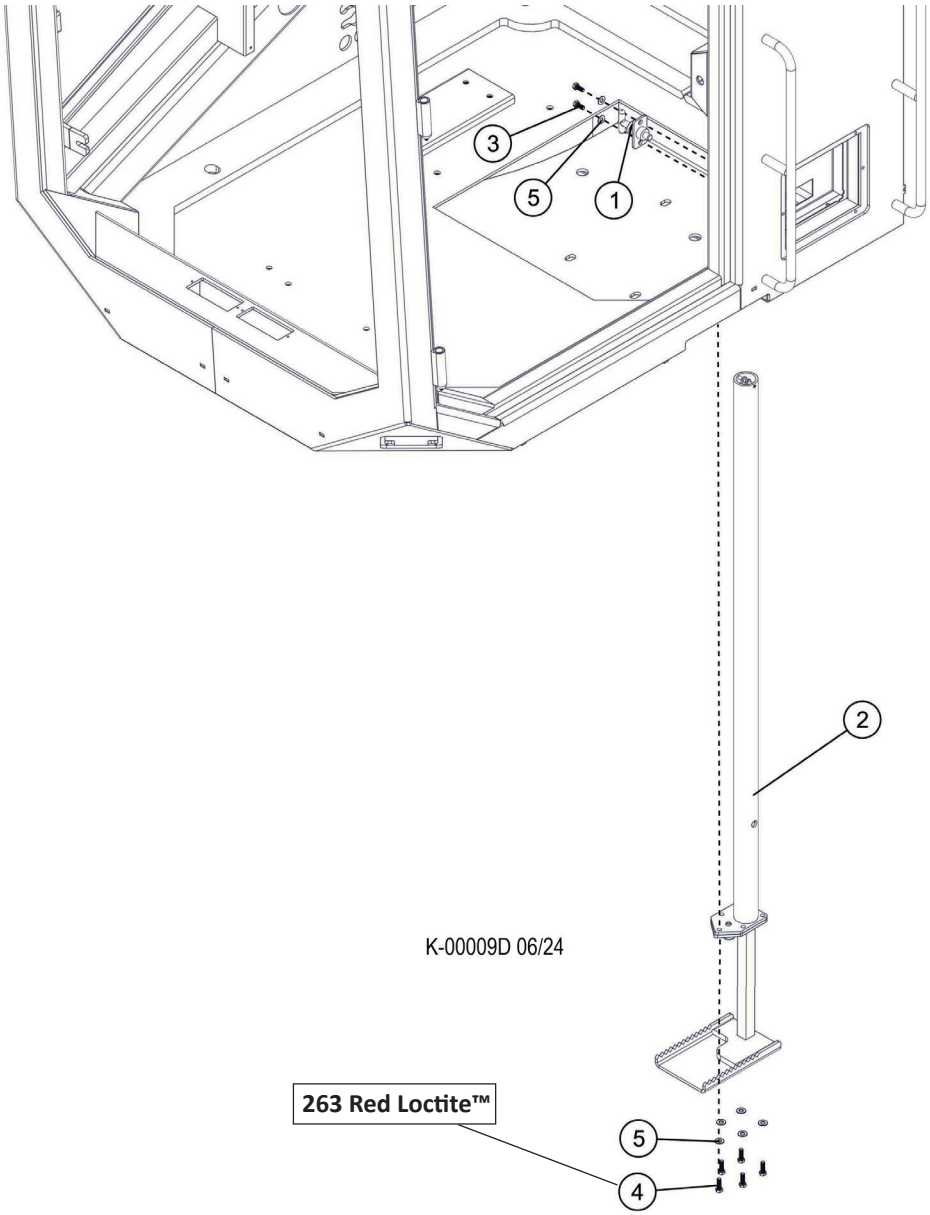

Item	Part #	Description	Qty.
1	54117	LATCH, STEP	1
2	47486-B	STEP, CAB	1
3	15605	BOLT - .3125” X .75”	2
4	15589	BOLT - .3125” X 1” **263 RED LOCTITE™**	5
5	15559	WASHER, SAE FLAT - .3125”	7

K100-00085 - CABIN NO STEP

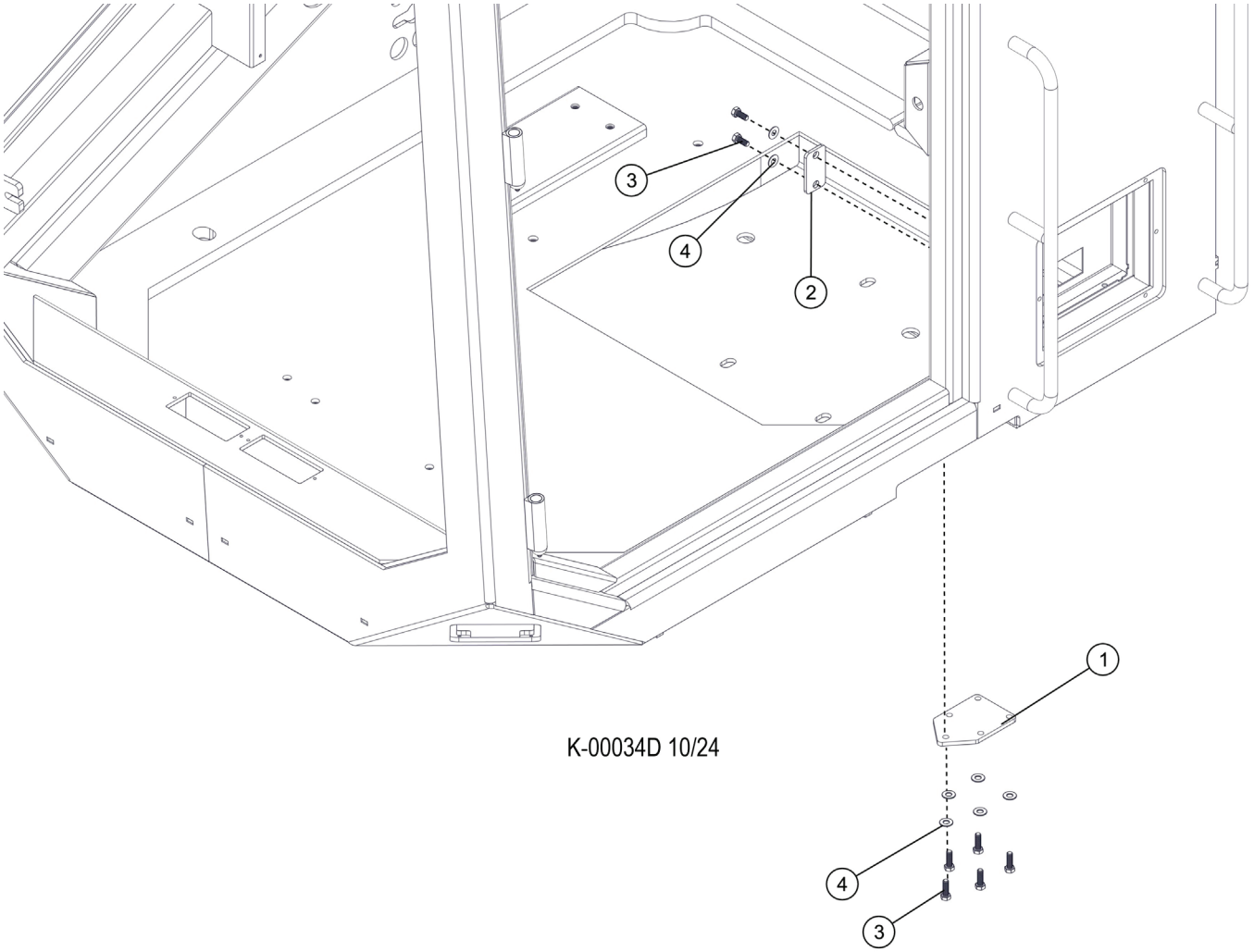

Item	Part #	Description	Qty.
1	60526	PLATE, STEP - BLOCK OFF	1
2	54117-BLANK	PLATE, LATCH BLOCK OFF	1
3	15605	BOLT - .3125” X .75”	7
4	15559	WASHER, SAE FLAT - .3125”	7

K100-00090 - JOYSTICKS - TRACK STD

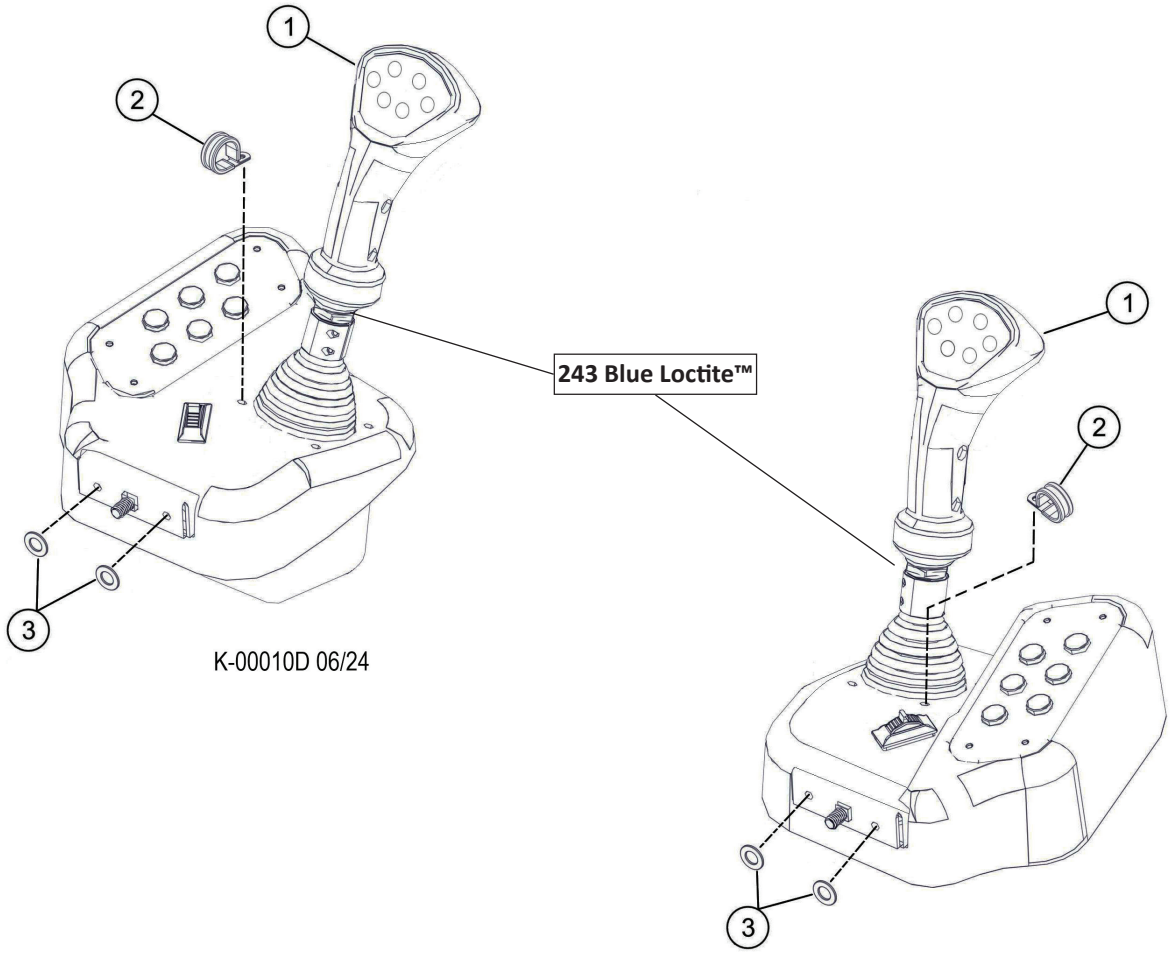

Item	Part #	Description	Qty.
1	55655	HAND CONTROL, UPPER - SURE GRIP	2
2	58227	CLAMP, CUSHION LOOP 1/4 INCH	2
3	10718	WASHER, SAE FLAT - .875”	4

K100-00100 - JOYSTICKS - PROCESSOR

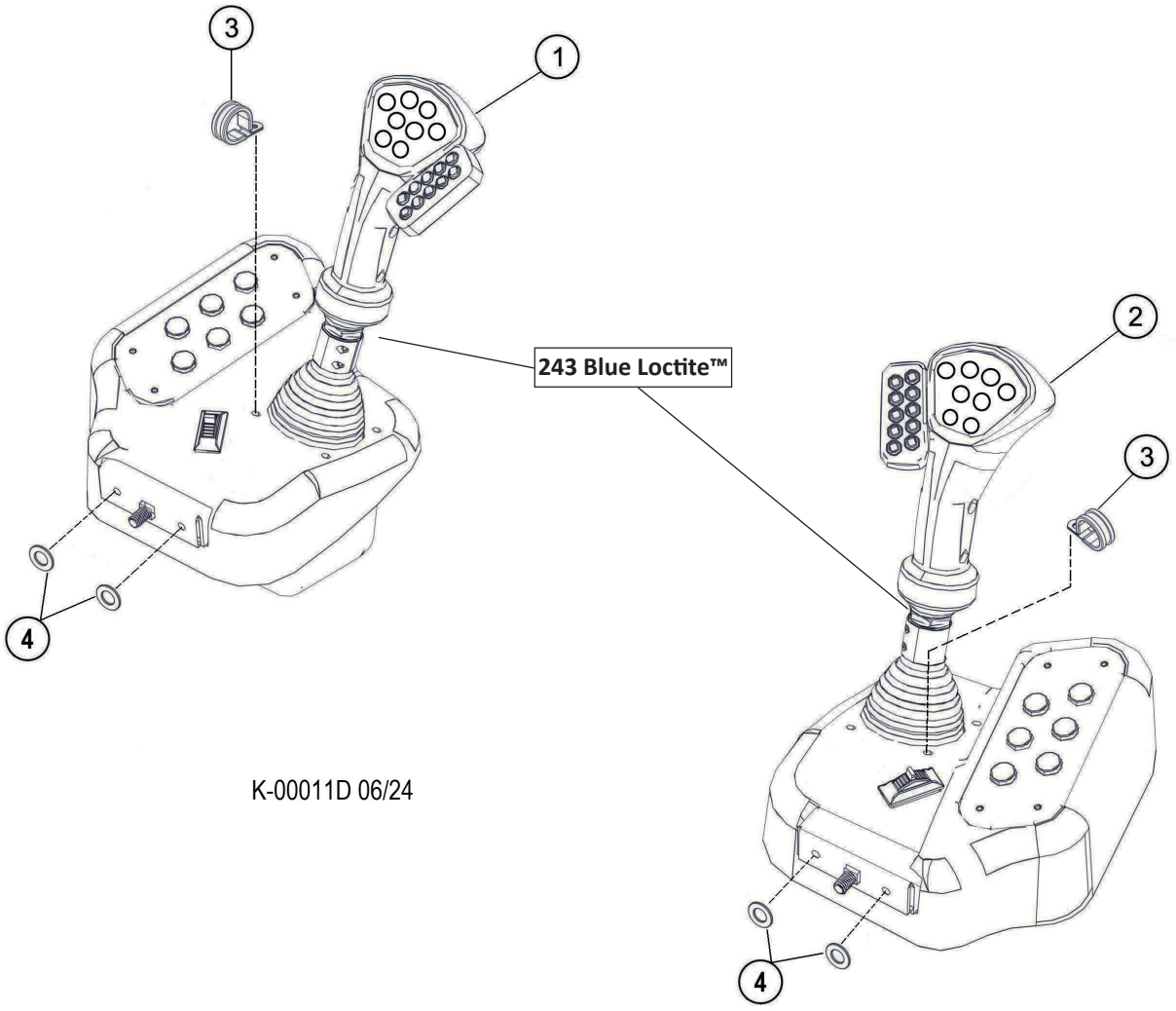

K-00011D 06/24

Item	Part #	Description	Qty.
1	51929	HAND CONTROL, SURE GRIP - W/LH KEYPAD	1
2	51566	HAND CONTROL, SG PROCESSOR - RH w/keypa	1
3	58227	CLAMP, CUSHION LOOP 1/4 INCH	2
4	10718	WASHER, SAE FLAT - .875”	4

K100-00110 - CABIN ELECTRICAL COMPONENTS

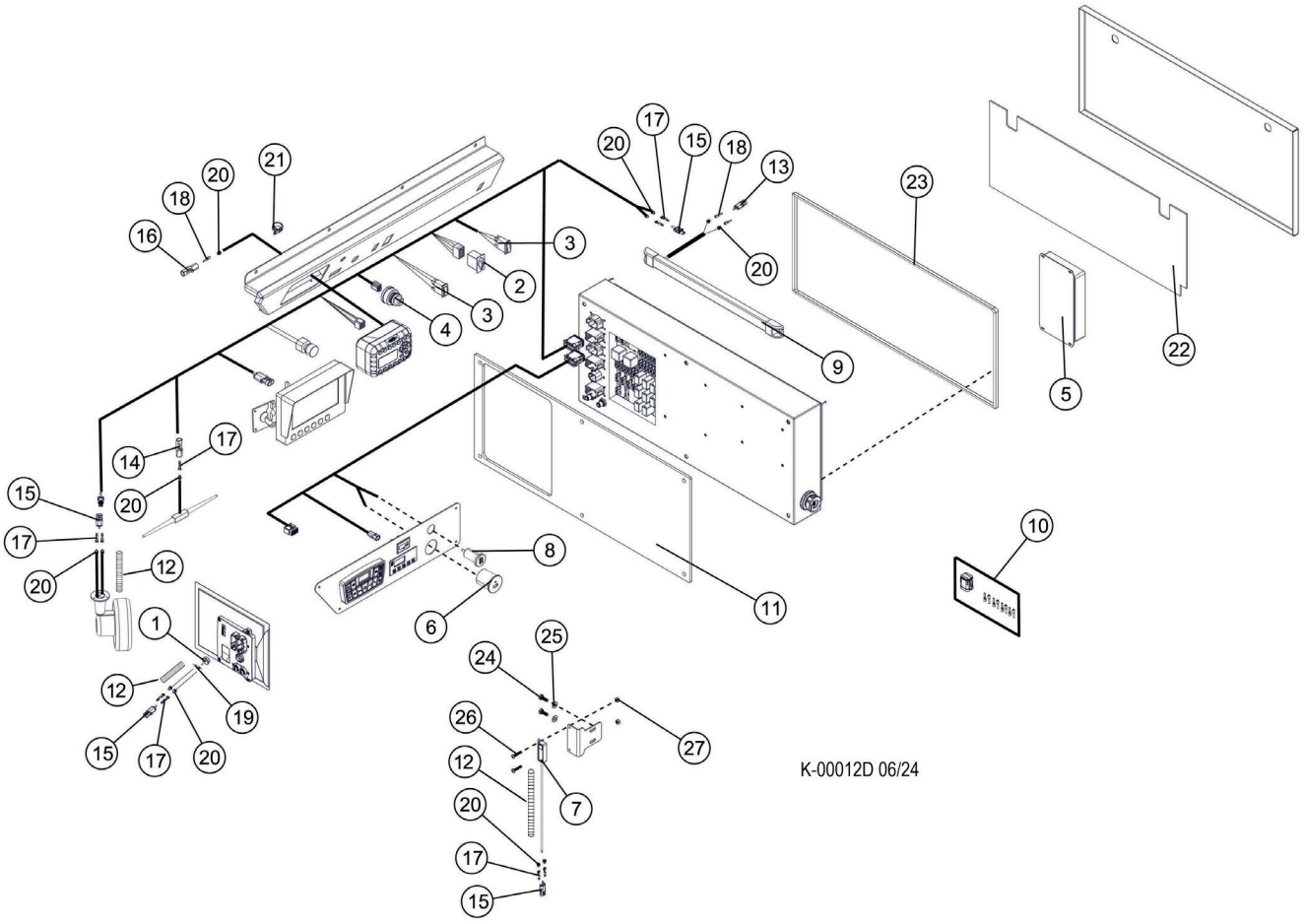

K100-00110 - CABIN ELECTRICAL COMPONENTS

Item	Part #	Description	Qty.
1	53115	SIREN, WARNING - B,C,D SERIES DASH	1
2	51673	SWITCH, VENT/ VACUUM - OTTO (1 PER)	1
3	51664	SWITCH, LIGHT - OTTO (1 PER)	2
4	52414	SWITCH, IGNITION (INDAK)	1
5	55483	CONVERTER, 24V TO 12V - “C AND D” SERIES	1
6	55401	ADAPTER, PANEL MOUNT USB - C SERIES	1
7	55264	SWITCH, LIMIT - GULLWING (MAGNETIC)	1
8	55662	POWER, POINT - AUX - C SERIES	1
9	58983	LIGHT, DOME - 12V REPLACES PN 23614	1
10	53260	DEUTSCH 8 CONTACT SOCKET KIT	1
11	46684	RUBBER, CAB TO ELECRICAL BOX - C MODEL	1
12	16705	LOOM, SPLIT - .25” GREEN (BULK)	3
13	23134	2 POSITION FEMALE SEALED CONNECTOR (WP)	1
14	22224	1 POSITION MALE SEALED CONNECTOR (WP)	1
15	22223	2 POSITION MALE SEALED CONNECTOR (WP)	4
16	23133	1 POSITION FEMALE SEALED CONNECTOR (WP)	1
17	22226	TERMINAL, MALE (WEATHER PACK)	9
18	23135	TERMINAL, FEMALE (WEATHER PACK)	3
19	15017	DIODE	1
20	22225	SEAL, WIRE END (WEATHER PACK)	12
21	58393	P-CLIP, 5/8 ID, CUSHIONED	1
22	58042	DEADENING SHEET, SOUND	1
23	55012	WEATHERSTRIPPING, RUBBER-DOOR SEAL THIN	6
24	15604	BOLT - .25” X .75”	2
25	10757	WASHER, SAE FLAT - .25”	2
26	59096	SCREW, 10-24X1.0 PAN HD	2
27	16131	NUT, NYLOCK - #10-24	2
-	688060	SIREN ASSY, DASH WARNING - (ITEMS - 1, 12, 15, 17, 19, 20)	1

K100-00120 - CABIN WIRE HARNESS

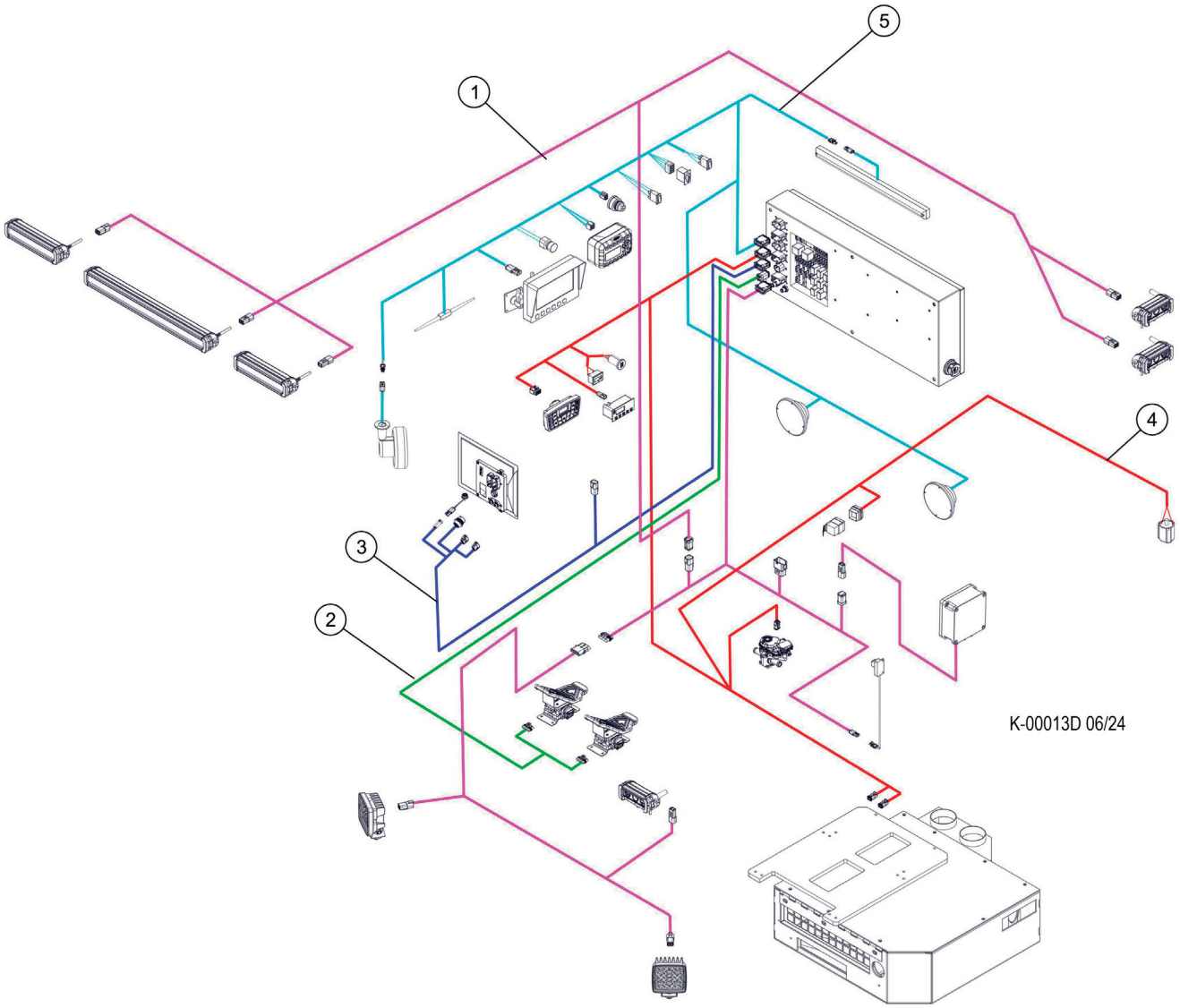

Item	Part #	Description	Qty.
1	57736	HARNESS, CAB - Lower-Lights (D-Series)	1
2	57758	HARNESS, MD4 - Track Foot Pedals 700D	1
3	55392	HARNESS, MD4 Harness - C Series	1
4	59039	HARNESS, CAB - Heat A/C NEW Contr (D-Ser	1
5	57737	HARNESS, CAB - Upper DASH (D-Series)	1

K100-00130 - CABIN CONTROLS - TRACK

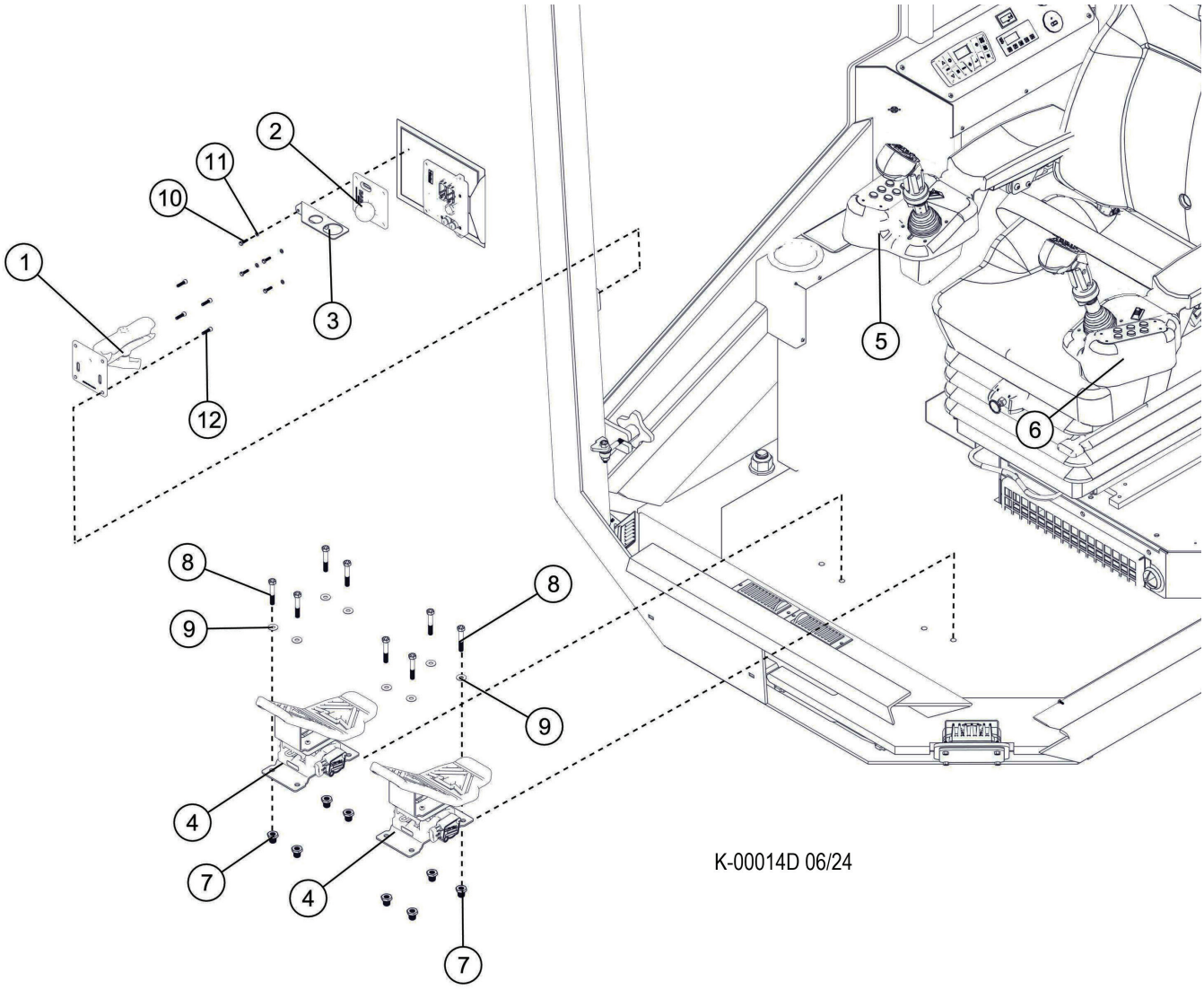

Item	Part #	Description	Qty.
	57866	KIT, IQAN TRACK/WHL - D SERIES (MD4 - 10	1
1	57240	MOUNT, RAM BALL - MD4	1
2	57531	MOUNT, SCREEN - MD4-10	1
3	47502	PLATE, BEEPER MOUNT: MD4-1O SCREEN	1
4	57801	PEDAL, FOOT CONTROL -D SERIES	2
5	55422	POD, JOYSTICK - RH (C&D RH TRACK)	1
6	55417	POD, JOYSTICK - LH (C&D SERIES WHEEL/TRA	1
7	15574	BUSHING, REDUCER - 5406-4-2	8
8	10823	BOLT - .3125” X 2”	8
9	15559	WASHER, SAE FLAT - .3125”	8
10	59094	SCREW, M4-.07 X 16mm HEX HD Grade 8.8	4
11	16208	WASHER, FLAT - #10	4
12	59095	SCREW, 10-24X3/4 SOCKET HD	4

K100-00140 - CABIN HVAC

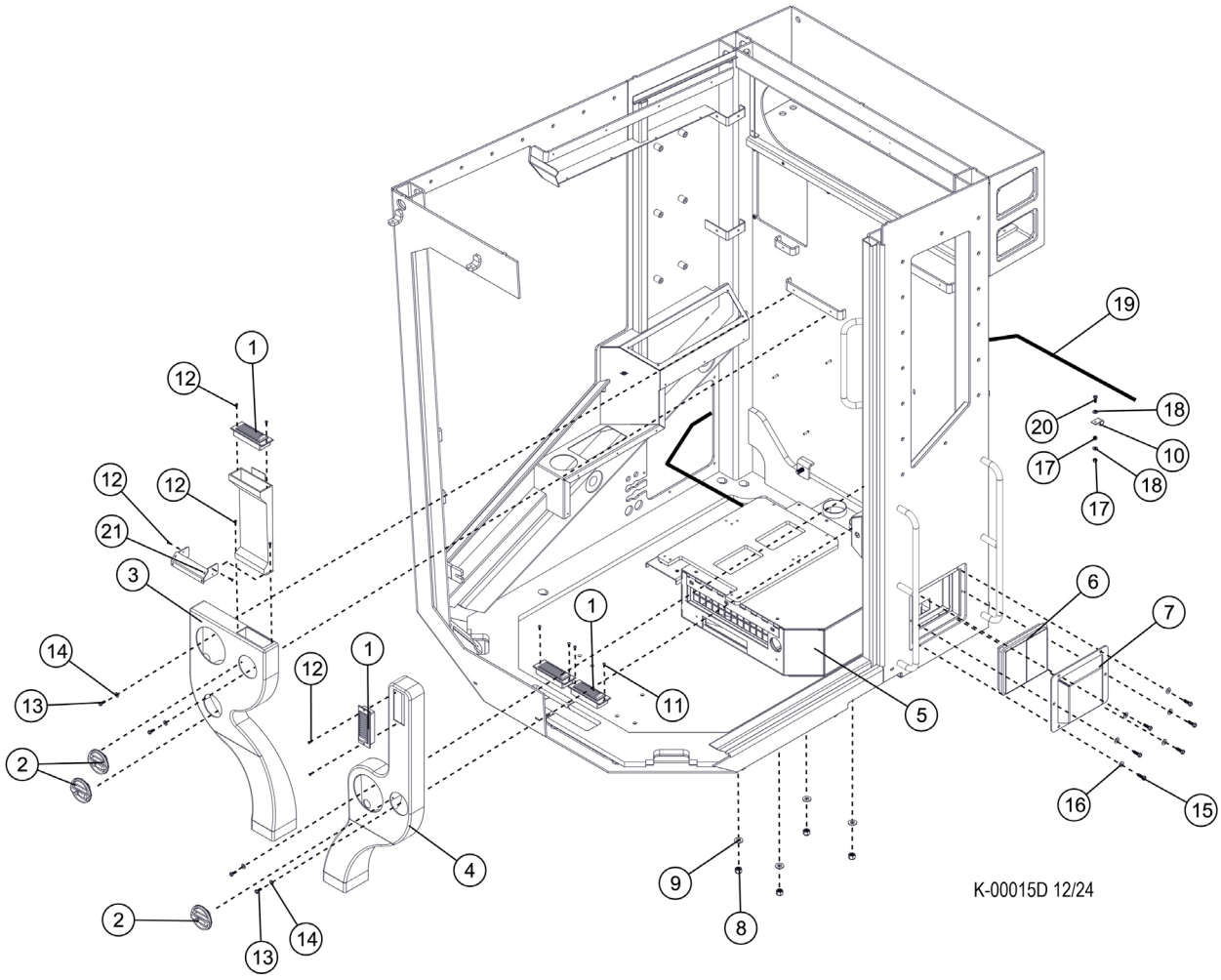

Item	Part #	Description	Qty.
1	51640	VENT, LOUVER - CAB HEAT (TF830)	4
2	57817	VENT, LOUVER - C-SERIES CAB	3
3	1048263	DUCT, PLASTIC HEATER VENT - D SERIES (RH	1
4	49494	DUCT, PLASTIC HEATER VENT - D SERIESLH	1
5	59033	KIT, HEATER/AC - D - SERIES CAB (UPDATE	1
6	54144	FILTER, CAB - PRESSURIZED (CURRENT)	1
7	61015	COVER, AIR FILTER - D CAB	1
8	15533	1/2” NUT, LOCK	4
9	15534	1/2” WASHER	4
10	59091	P-CLIP, CUSHIONED, 1.0”	1
11	22862	SCREW, MACHINE - #10-24 X .5” (BUTTON)	4
12	59085	SCREW, 8X3/4 PAN HD (SELF TAP)	10
13	15604	BOLT - .25” X .75”	4
14	10800	WASHER, FLAT - .25”	4
15	15589	BOLT - .3125” X 1”	6
16	15559	WASHER, SAE FLAT - .3125”	6
17	10811	NUT, LOCK - .25”	2
18	10757	WASHER, SAE FLAT - .25”	2
19	59114	KIT, HEATER/AC HOSE	1
20	15575	BOLT - .25” X 1.5”	1
21	673350	WELDMENT, DUCT PROTECTOR	1

K100-00141 - CABIN HEATER / AIR CONDITIONING BOX COMPONENTS

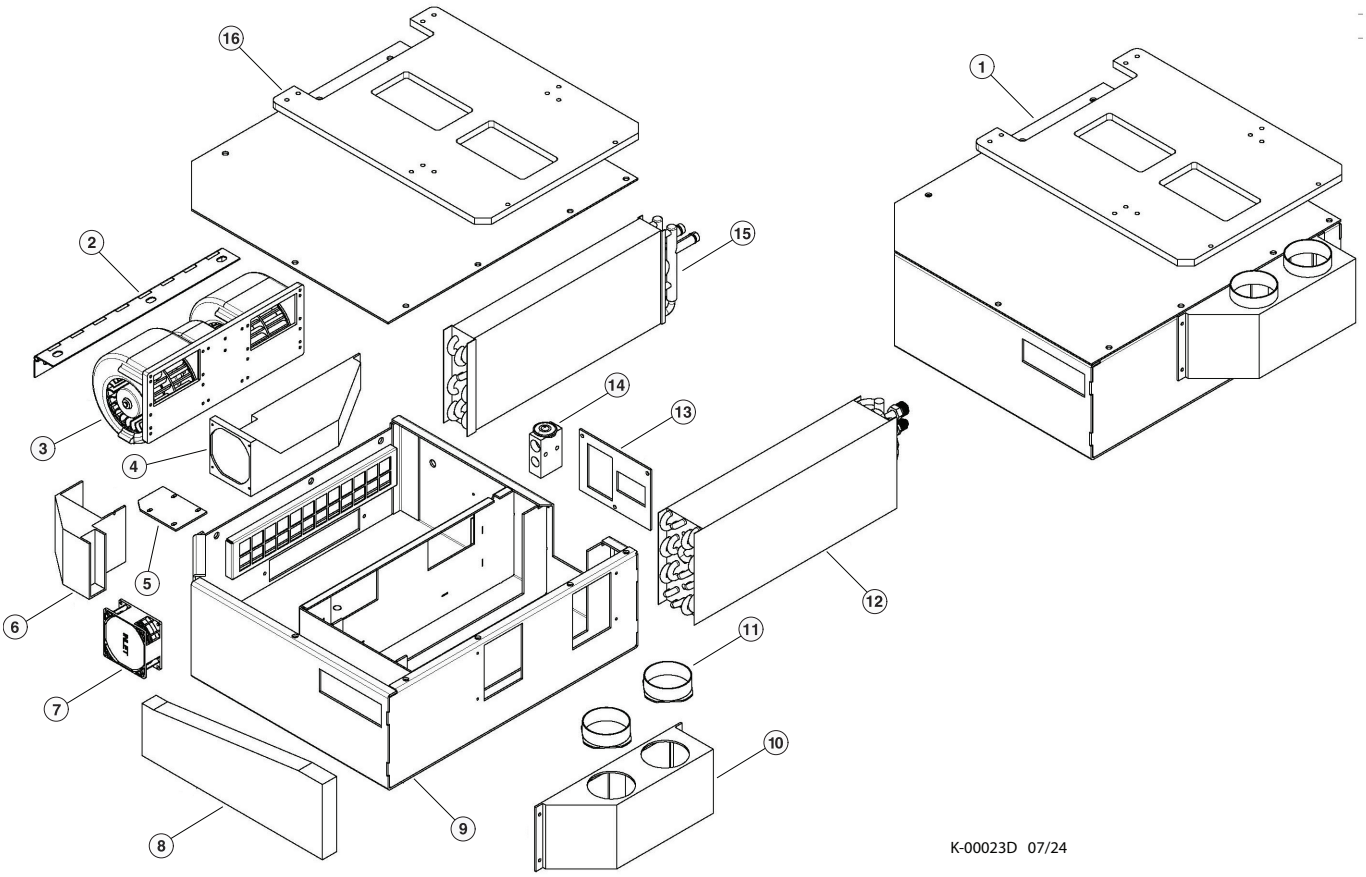

Item	Part #	Description	Qty.
1	59033	HEARTER / AC UNIT	1
2	BA-916-053-28	COVER HINGE	1
3	55731	BLOWER - 24V	1
4	BA6-1067	INSIDE AIR DUCT	1
5	BA8-1067-3	FAN HOUSING PLATE	1
6	BA8-1067-1	DUCT, DEFROST FAN	1
7	BA3-5048	FAN ASSEMBLY - 24V	1
8	BA8-1067-2	TRANSFER DUCT - INSIDE	1
9	BA-916-053-36	UNIT HOUSING	1
10	56079	A/C DUCT COMBINER	1
11	BT2-1024	3” HOSE ADAPTOR	2
12	55858	COIL EVAP BA6-1071-1	1
13	BA-916-053-32	PLATE	1
14	R-71-8321	EXP VALVE	1
15	BA6-1072-1	HEATER COIL	1
16	BA-916-053-44	UNIT COVER	1

K100-00142 - HEATER / AIR CONDITIONING CONTROLLER

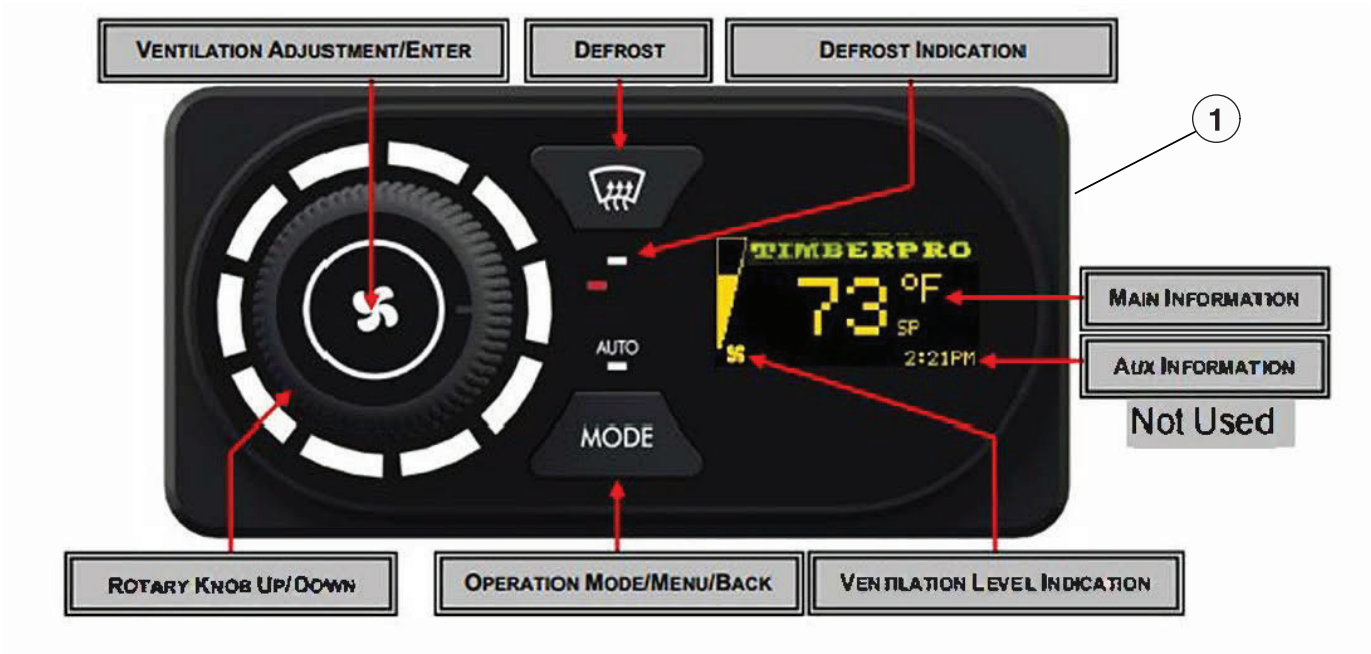

K-00024D 07/24

Item	Part #	Description	Qty.
1	55730	CONTROLLER, NEO 2+ GLOBUS PROG	1
		NOTE: CONTROLLER P/N 55730 REPLACES CONTROLLER P/N 58162. FOR OLDER MACHINES STILL USING THE 58162 CONTROLLER, ORDER P/N 55730 AND ALSO 59056 TO RETOFIT THESE MACHINES.	

58162 - PANEL, TOUCH - HEATER/AC **(SHOWN FOR REFERENCE ONLY)**



K-00040D 12/25

K100-00143 - HEATER / AIR CONDITIONING BINARY SWITCH

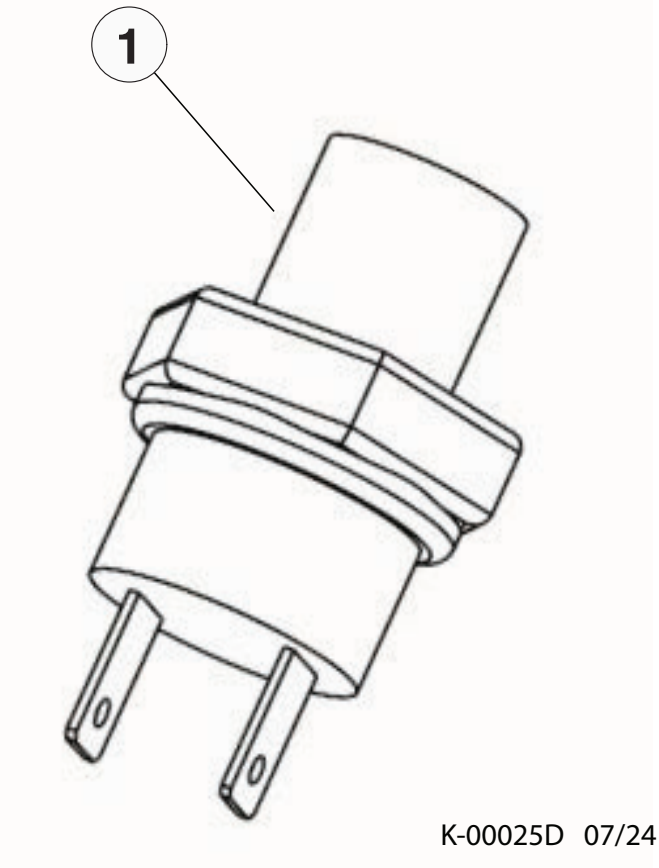

Item	Part #	Description	Qty.
1	681820	BINARY SWITCH	1

K100-00144 - HEATER / AIR CONDITIONING BINARY AIR TEMP SENSOR

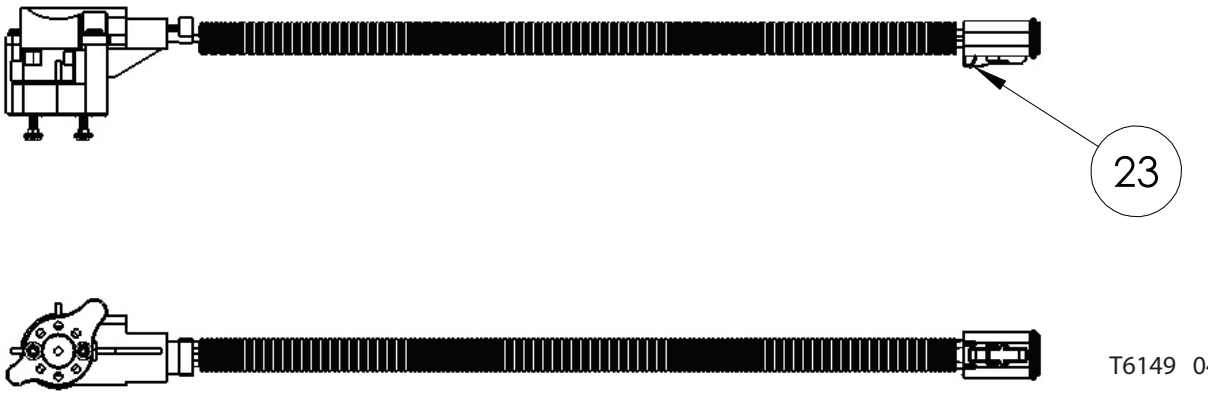

T6149 04/25

Item	Part #	Description	Qty.
1	55972	SENSOR, TEMP W/ RESISTER/ADAPTOR	1

K100-00145 - CABIN HEATER WATER VALVE

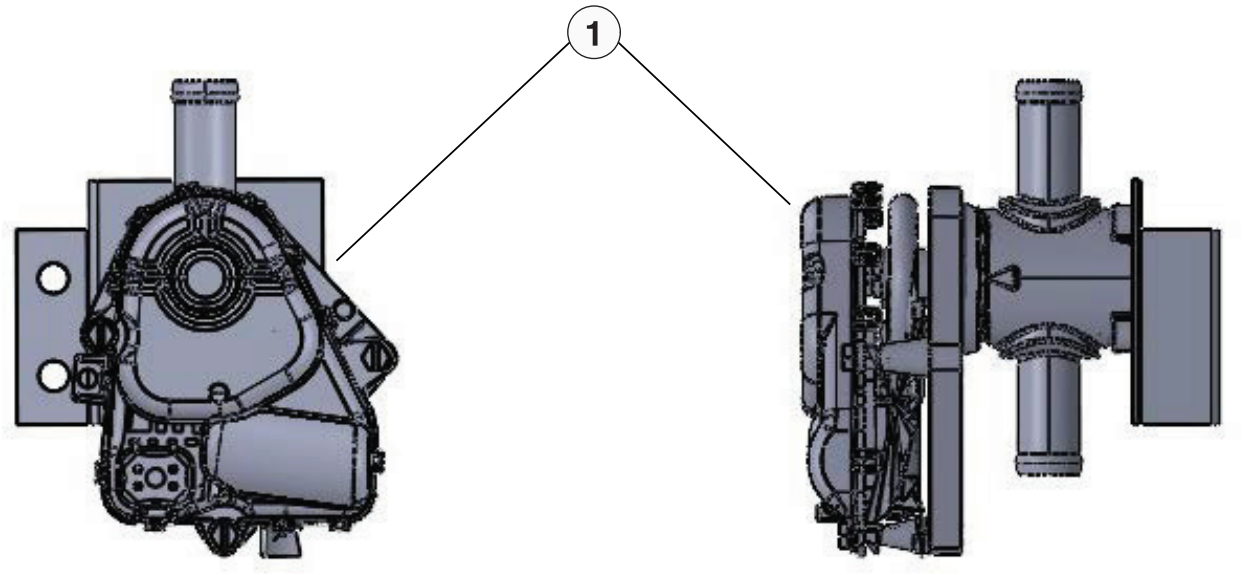

K-00027D 07/24

Item	Part #	Description	Qty.
1	58328	VALVE, WATER - “D” SERIES CAB - BI-DIRECIONAL	1

K100-00146 - AIR CONDITIONING DRIER

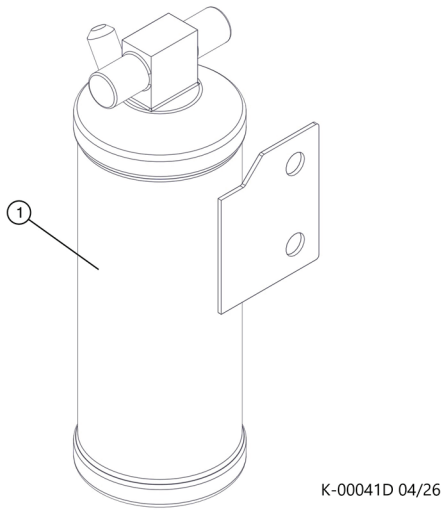

Item	Part #	Description	Qty.
1	50937	DRIER, A/C - (EAGLE 24V SYSTEM)	1

K100-00147 - AIR CONDITIONING REFRIGERANT DECAL

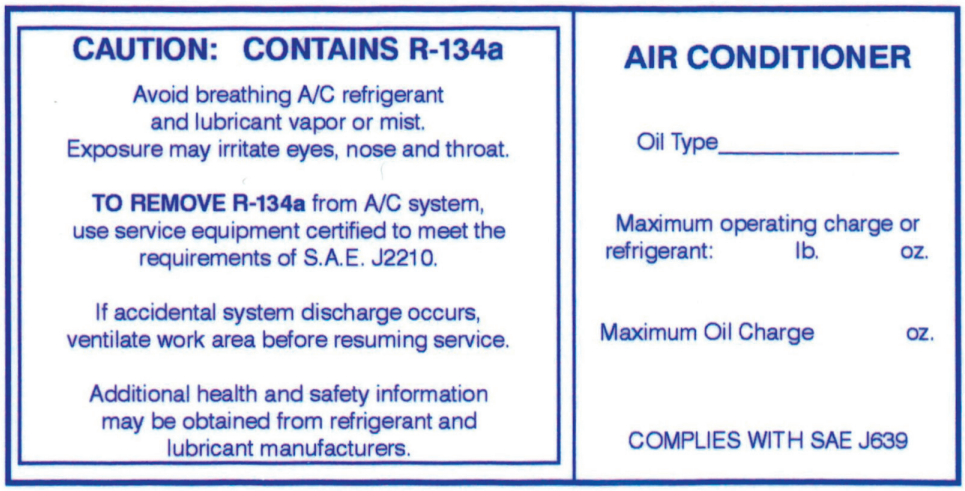

K-00030D 04/26

Item	Part #	Description	Qty.
1	681520	REFRIGERANT DECAL	

1

K100-00148 - AIR CONDITIONING / HEATER HOSES

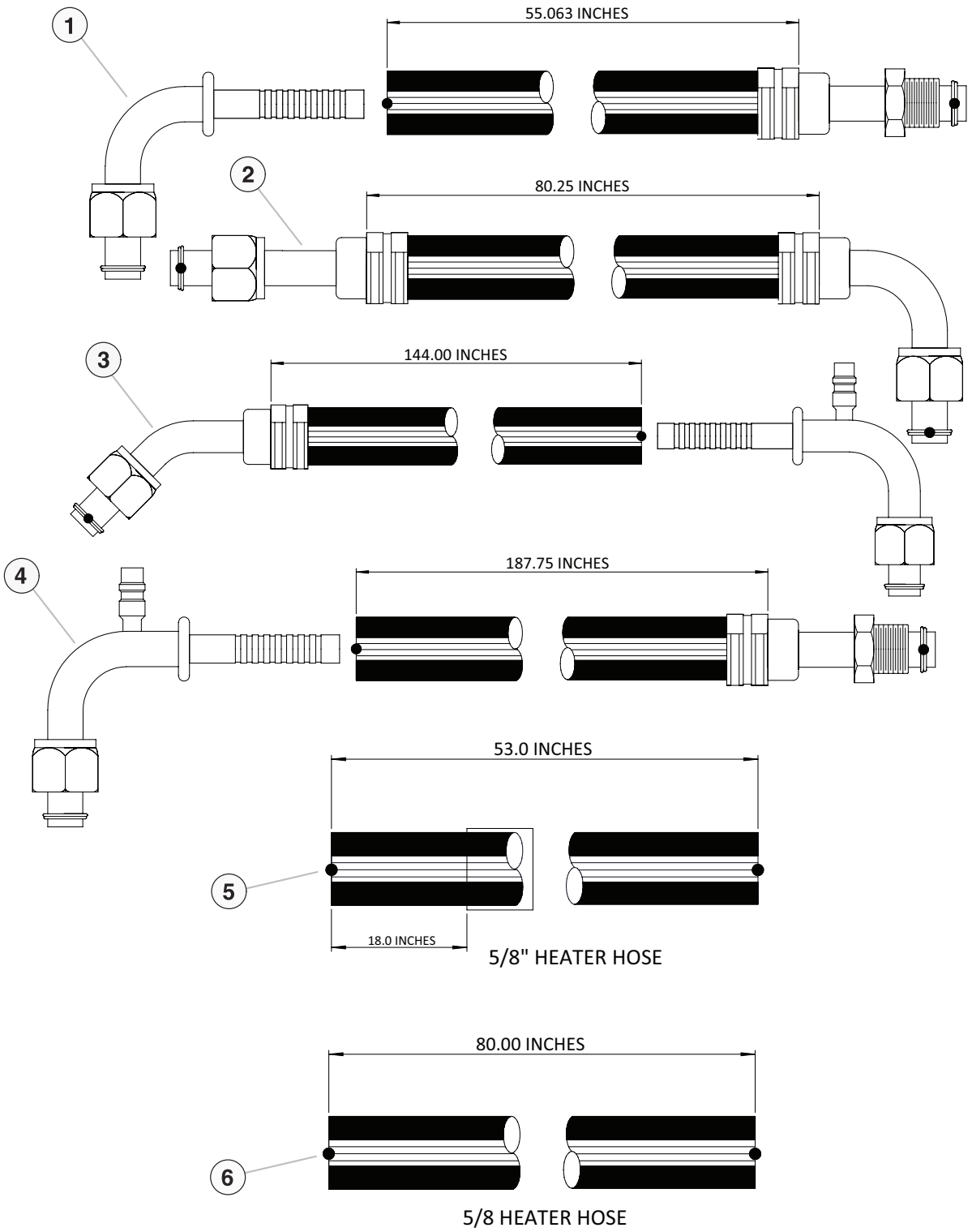

K-00031D 07/24

K100-00148 - AIR CONDITIONING / HEATER HOSES

Item	Part #	Description	Qty.
1	681740	HOSE - #6 DRIER TO EX VALVE	1
2	681750	HOSE - #6 COND. TO DRIER	1
3	681760	HOSE - #8 DISCHARGE	1
4	681770	HOSE - #16 SUCTION	1
5	681780	HOSE - HEATER 5/8” CUT TO 4’-5”	1
6	681790	HOSE - HEATER 5/8” CUT TO 6’-8”	1

K100-00149 - DEROST CABIN FAN

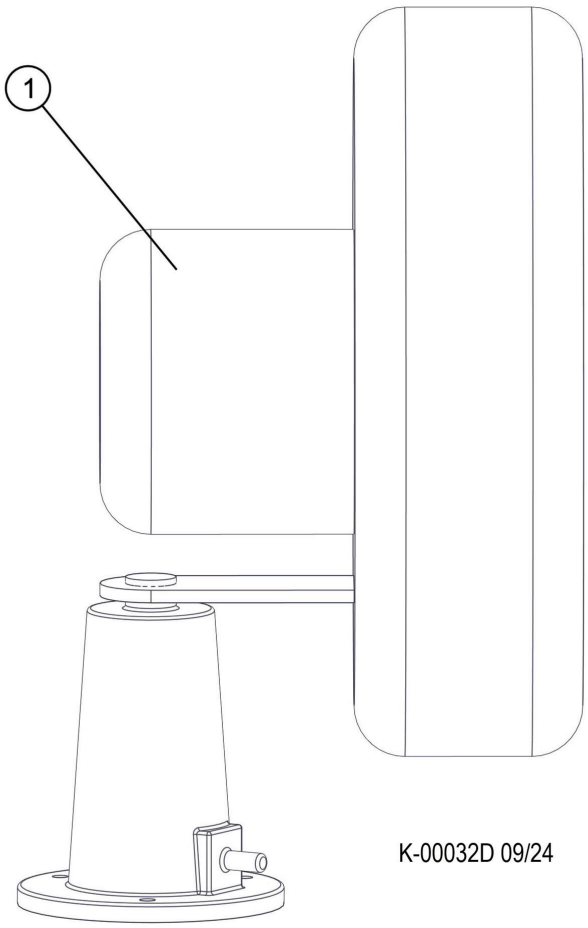

Item	Part #	Description	Qty.
1	23279	FAN, WINDSHIELD DEFROST - 24V	1

K100-00150 - HVAC MOUNTING

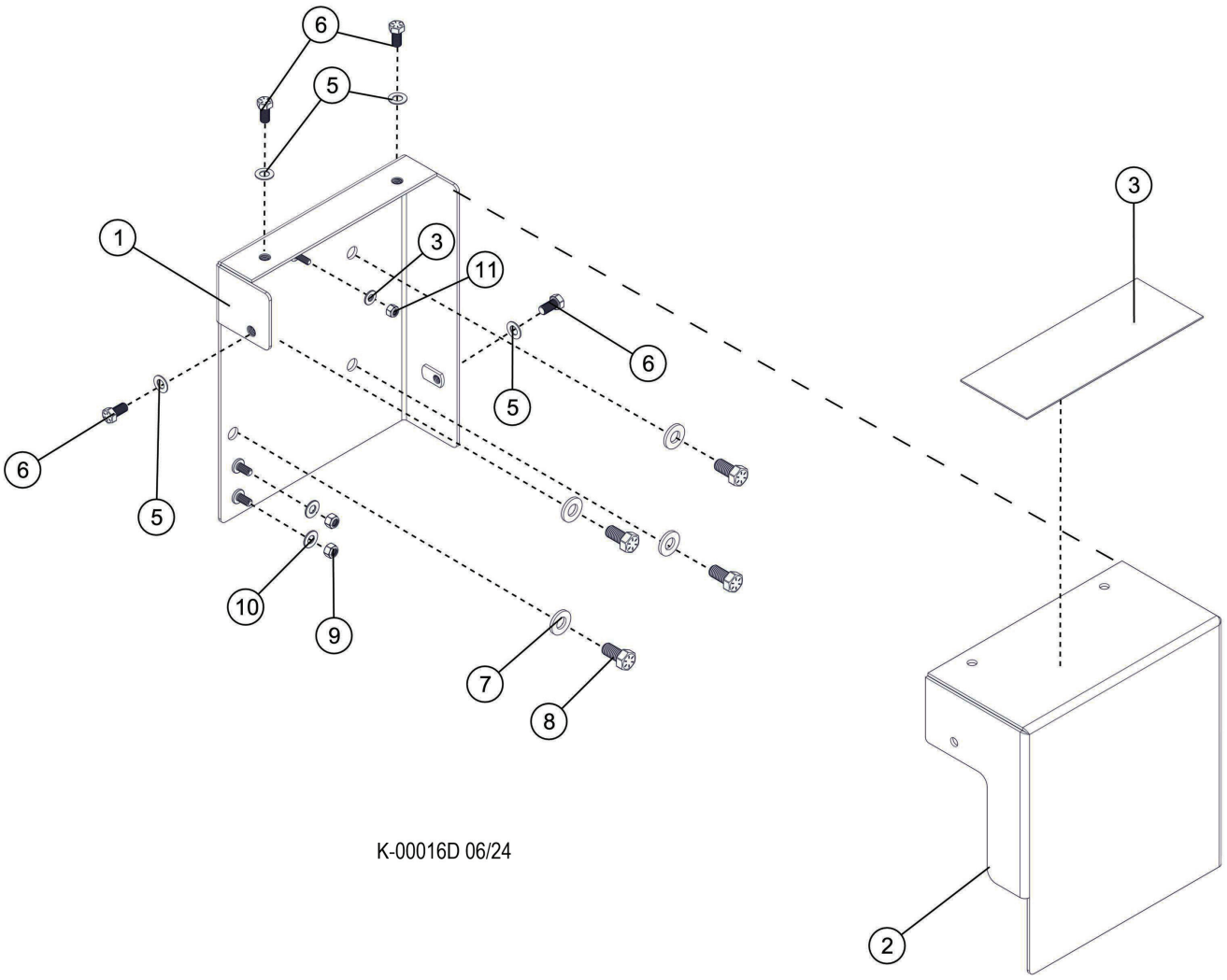

K-00016D 06/24

Item	Part #	Description	Qty.
1	65487	WELDMENT, DRIER AND CAB VALVE MOUNT	1
2	654890	PLATE, DRIER AND CAB VALVE COVER	1
3	65655	NON-SKID, TAPE - 3.75” X 10” LONG	1
4	10757	WASHER, SAE FLAT - .25”	1
5	15528	WASHER, SAE FLAT - .375”	4
6	15542	BOLT - .375” X .75”	4
7	15534	WASHER, SAE FLAT - .5”	4
8	10783	BOLT - .5” X 1”	4
9	10788	NUT, NYLOCK - .3125”	2
10	15559	WASHER, SAE FLAT - .3125”	2
11	15509	NUT, NYLOCK - .25”	1

K100-00160 - CABIN RADIO

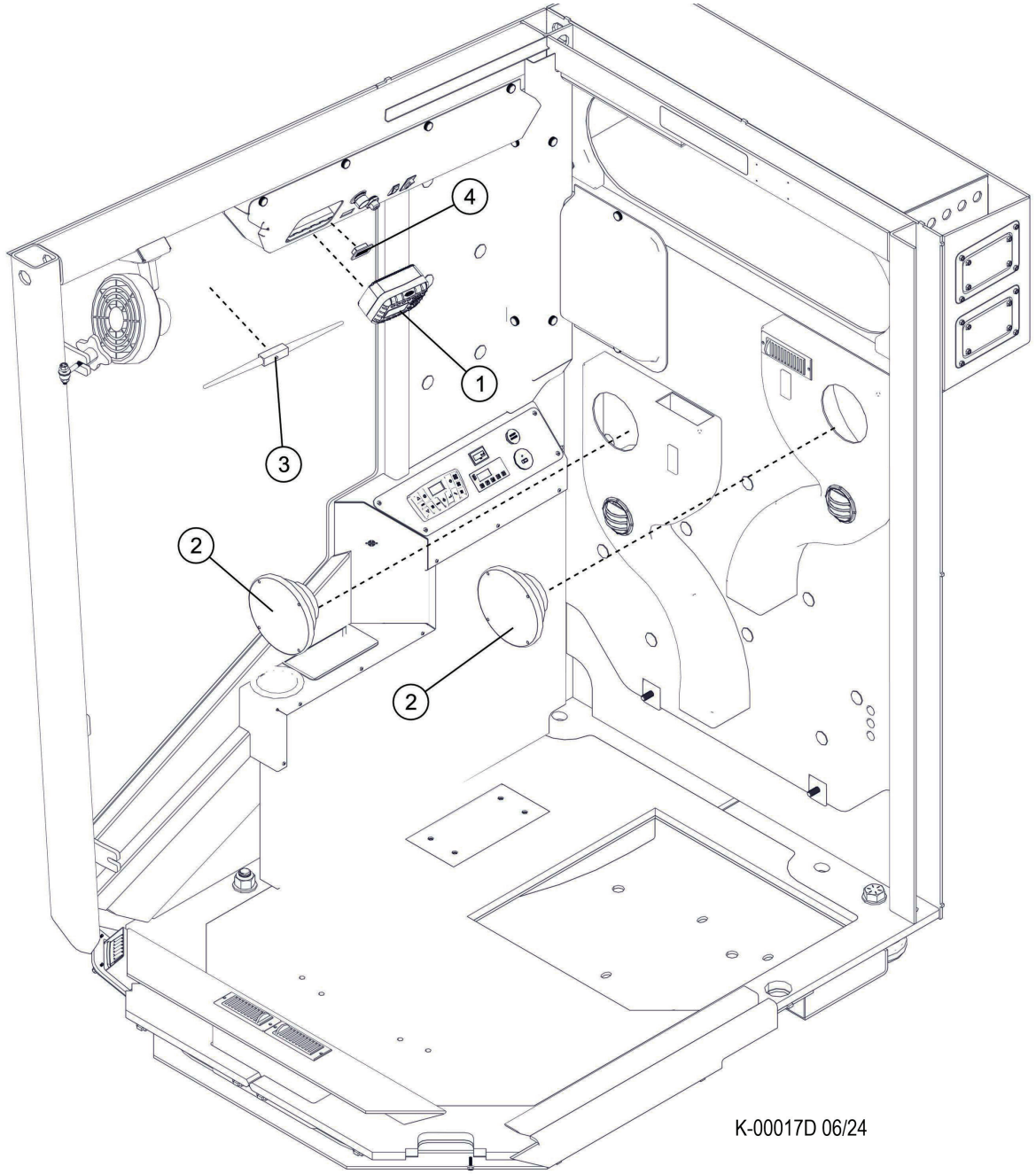

Item	Part #	Description	Qty.
1	57803	RADIO, D SERIES W/ HANDS FREE CALLING	1
2	57857	SPEAKER PAIR, (CAB)	2
3	57858	ANTENNA, CAB - D-SERIES	1
4	57876	MICROPHONE, RADIO - D-SERIES	1

K100-00170 - CABIN FIRE EXTINGUISHER

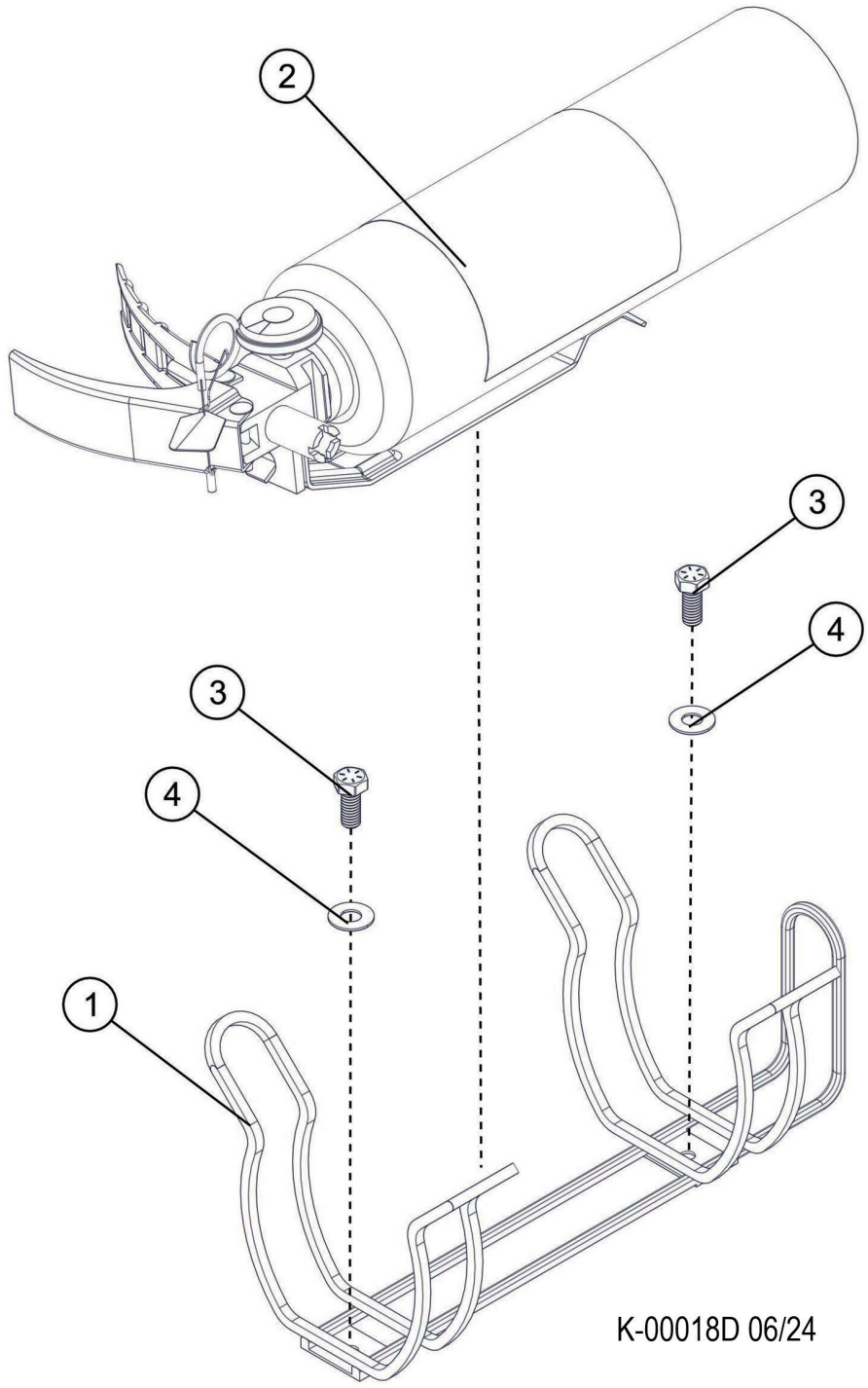

Item	Part #	Description	Qty.
1	57892	BRACKET, FIRE EXTINGUISHER - 5 LBS	1
2	57891	FIRE EXTINGUISHER - 5 LBS - CAB D	1
3	15605	BOLT - .3125” X .75”	2
4	15559	WASHER, SAE FLAT - .3125”	2

K4208-2255700 - KOMTRAX COMPONENTS & INSTALLATION

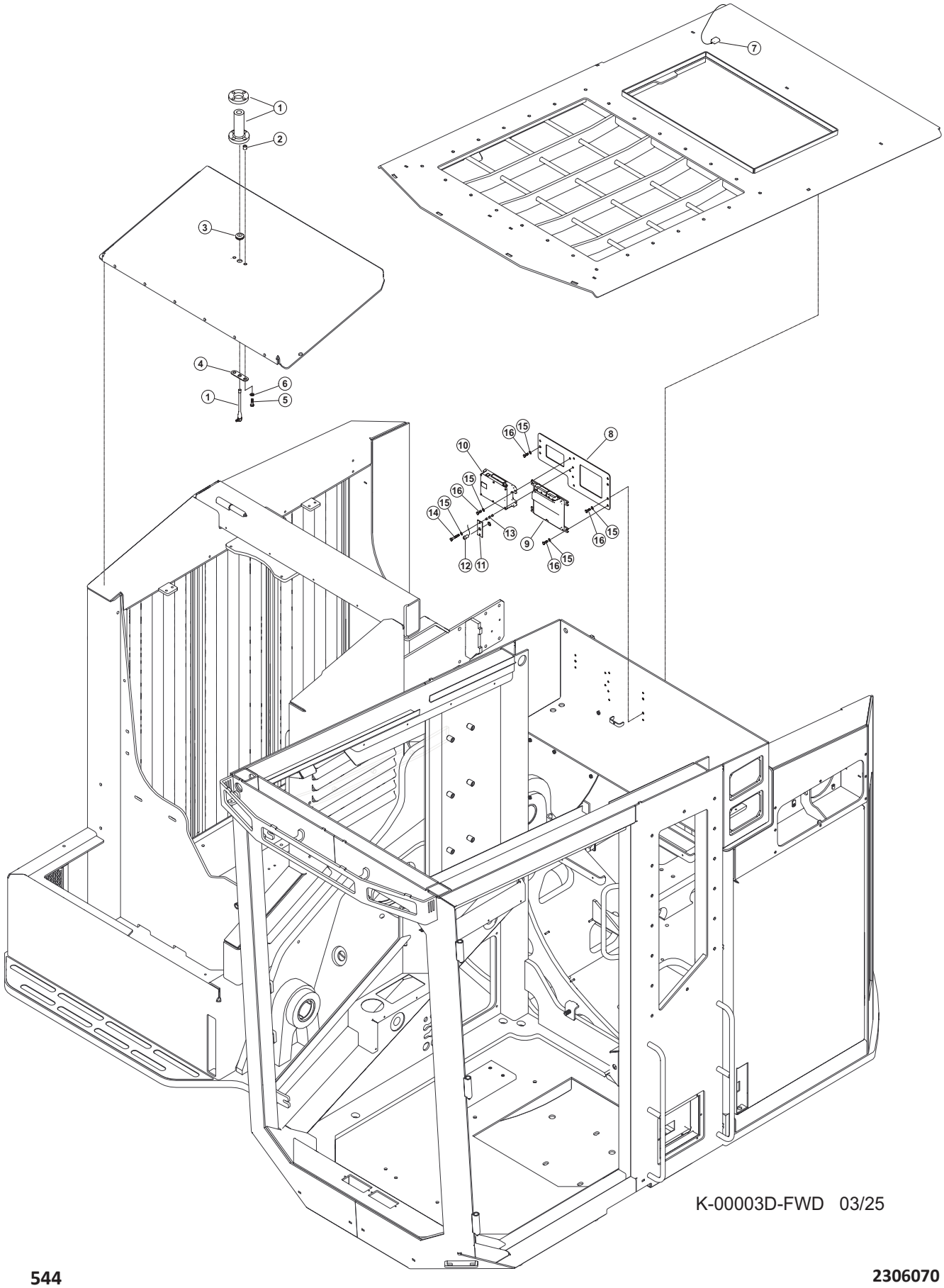

K4208-2255700 - KOMTRAX COMPONENTS & INSTALLATION

Item	Part #	Description	Qty.
1	8A13102100	ANTENNA, KOMTRAX	1
2	4A10622890	COLLAR	4
3	4A10622060	GROMMET	1
4	4A10622910XC	PLATE	1
5	10739	BOLT - .5” X 1.5”	4
6	15534	WASHER, SAE FLAT - .5”	4
7	8A13101320	ANTENNA, GPS	1
8	65331	BRACKET, CAB - KOMTRAX	1
9	7835739000	CONTROLLER, TRANS	1
10	7826253309	CONTROLLER, TC330	1
11	1240639110	PLATE, LIGHT	1
12	12Y0639110	SYSTEM OPERATING LAMP	1
13	672120	SPACER	6
14	18273	BOLT	2
15	10757	WASHER, SAE FLAT - .25”	13
16	18309	BOLT - .25” X 1.25”	11
*	8A13102200	CABLE - KOMTRAX	1
*	2075332840	GPS COVER - KOMTRAX	1
*	4A10622931	TUBE - KOMTRAX	1
*	4A10622920NK	PLATE - KOMTRAX	1
*	4235411340	SPACER - KOMTRAX	1
*	4230633170	GROMMET - KOMTRAX	2
*	58352	HARNESS, KOMTRAX D-MODEL INSTALL	1
*	65334	STANDOFF 1.63, TAPPED .25-20	1
*	65335	STANDOFF 1 IN, TAPPED .38-16	1
*	HD1691939S	CONNECTOR, DEUTCH - 9 P	1
*	0819212200	CONNECTOR	1
*	0819107420	SOCKET, DEUTCH - 16-18ga	1

***MEANS NOT SHOWN**

K-2255700 - KOMTRAX COMPONENTS & INSTALLATION - (IRIDIUM ANTENNA)

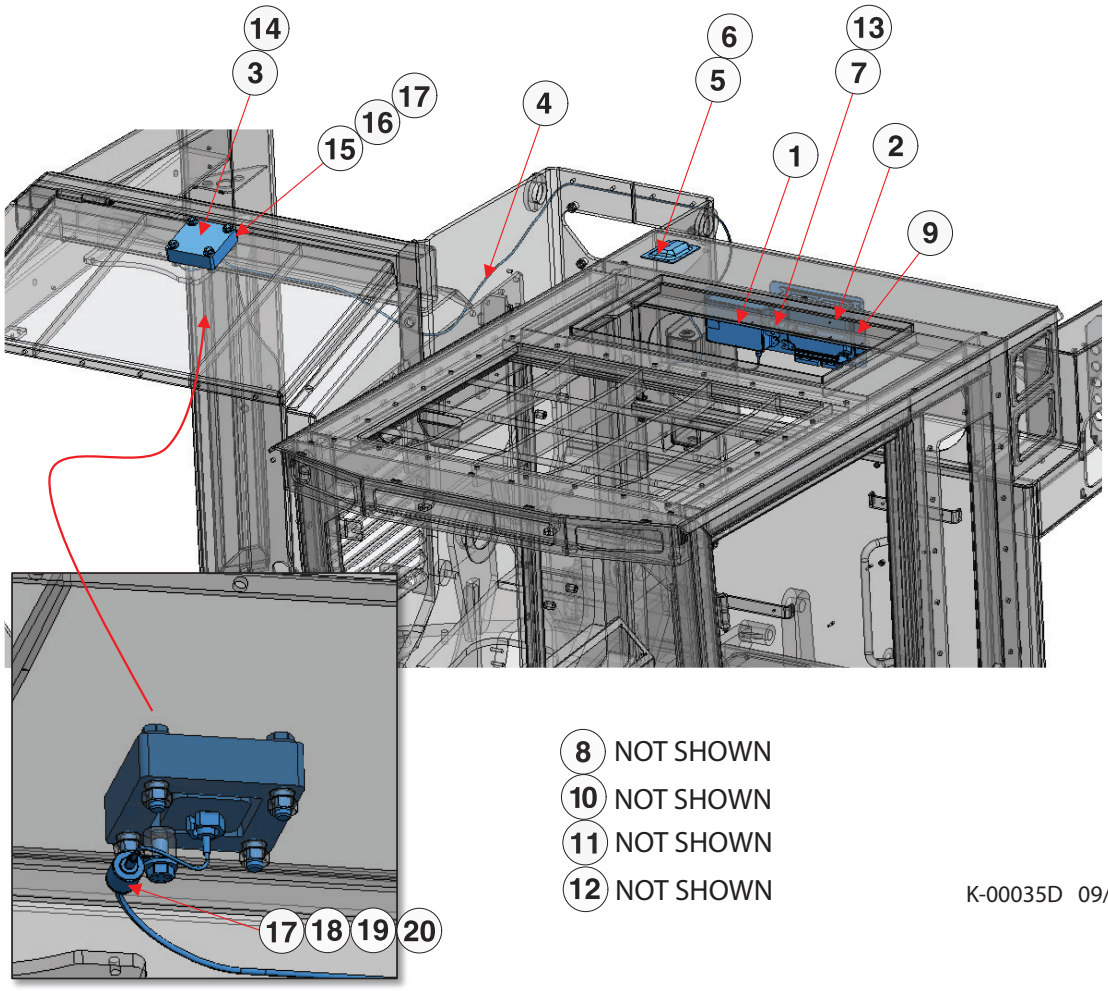

8 NOT SHOWN
10 NOT SHOWN
11 NOT SHOWN
12 NOT SHOWN

K-00035D 09/25

Item	Part #	Description	Qty.
1	7826253309	CONTROLLER, TC330 - KOMTRAX	1
2	7835739000	CONTROLLER,TRANS - KOMTRAX	1
3	8A13106100	ANTENNA, KOMTRAX IRIDIUM	1
4	8A13106110	CABLE - KOMTRAX IRIDIUM	1
5	8A13101370	ANTENNA, GPS- KOMTRAX	1
6	2075332840	COVER	1
7	12Y0639110	LAMP	1
8	68925	HARNESS, KOMTRAX XC43	1
9	65332	WELDMENT, KOMTRAX CAB MOUNT	1
10	HD1691939S	CONNECTOR, DEUTCH - 9 PIN	1
11	0819212200	CONNECTOR	1
12	0819107420	SOCKET, DEUTCH - 16-18ga	2
13	672120	SPACER, PLASTIC .5” X 2”	2
14	689140	COVER, IRIDIUM ANTENNA	1
15	689290	SPACER	4
16	15565	BOLT - .5” X 2.5”	4
17	15534	WASHER, SAE FLAT - .5”	5
18	0443451912	CLIP	1
19	0709520213	CUSHION	1
20	10783	BOLT - .5” X 1”	1

GUARDS - (M)

M100-00010 - GULLWING DOOR INSTALLATION

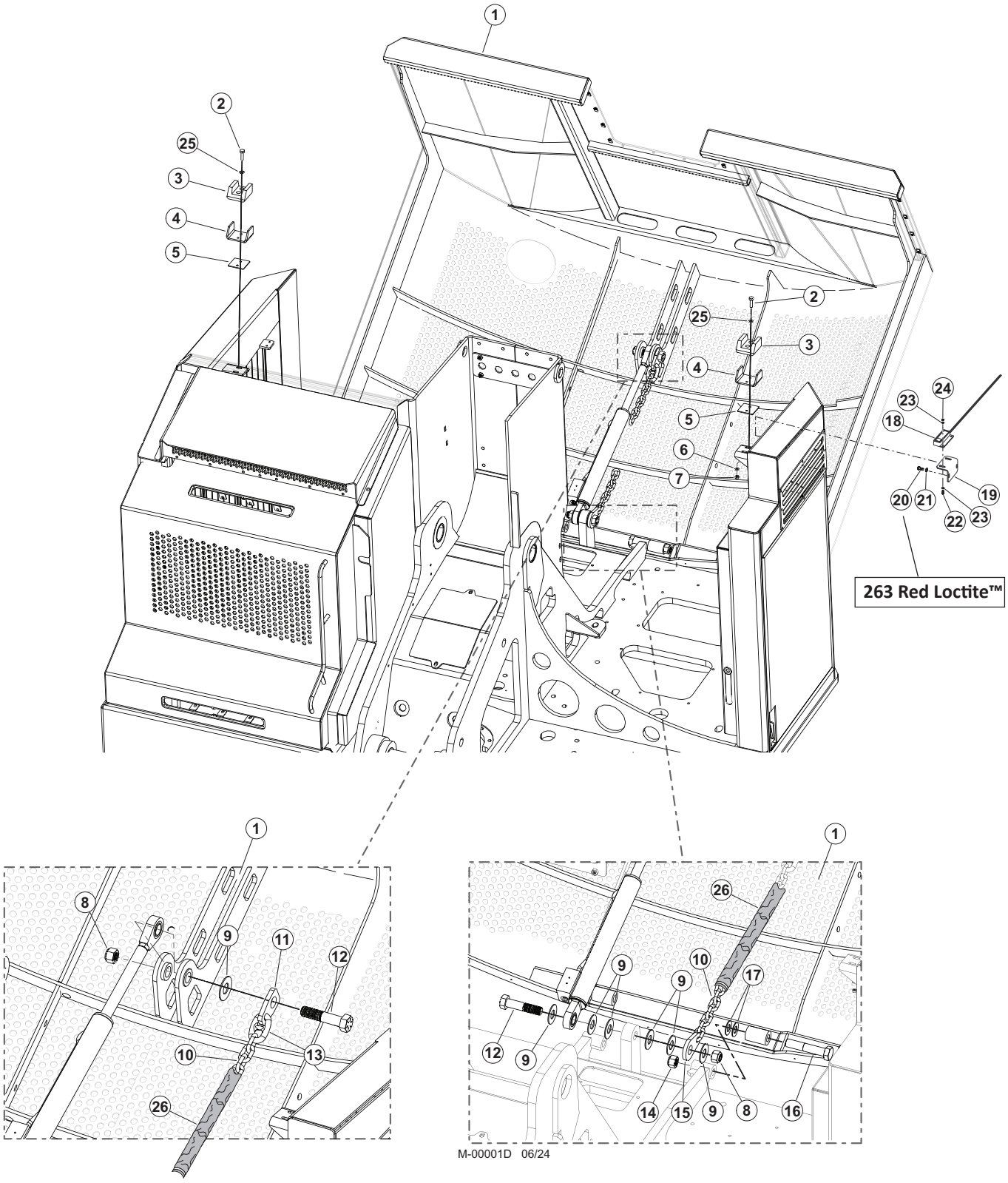

M100-00010 - GULLWING DOOR INSTALLATION

Item	Part #	Description	Qty.
1	65948	GULLWING, D SERIES	1
2	10823	BOLT - .3125” X 2.00”	4
3	54511	ISOLATOR, GULLWING MOUNTING-UHMW BLOCK	2
4	54512	CHANNEL, ISOLATOR MOUNT - GULLWING	2
5	54520	SPACER, GULLWING ISOLATOR	2
6	10801	WASHER, FLAT - .3125”	4
7	10812	NUT, LOCK - .3125”	8
8	52026	NUT,HEX GULLWING CYL. - 1.25” - GRD 9	2
9	22531	WASHER, SAE FLAT - 1.25”	8
10	55715	CHAIN, 23 LINK - GULLWING GR 8100	1
11	54515	LINK, GULLWING SAFETY CHAIN	1
12	52025	BOLT, GULLWING CYL. - 1.25” - 7 X 7”	2
13	54260	CLEVIS, 3/8” - GULLWING	2
14	18253	NUT, LOCK - 1.00”	2
15	46496	LINK, GULLWING SAFETY CHAIN	1
16	15580	BOLT - 1” X 8”	2
17	15579	WASHER, SAE FLAT - 1.00”	4
18	55264	SWITCH, LIMIT - GULLWING (MAGNETIC)	1
19	46508	BRACKET, GULLWING SWITCH	1
20	15604	BOLT - .25” X .75” **263 RED LOCTITE™**	2
21	10800	WASHER, FLAT - .25”	2
22	59107	SCREW, 10-24X3/4” PAN HD	2
23	16208	WASHER, FLAT - #10	2
24	16131	NUT, NYLOCK - #10-24	2
25	15559	WASHER, SAE FLAT - .3125”	4
26	50188	HOSE WRAP	3’

M100-00020 - GULLWING DOOR DEBRIS GUARDS

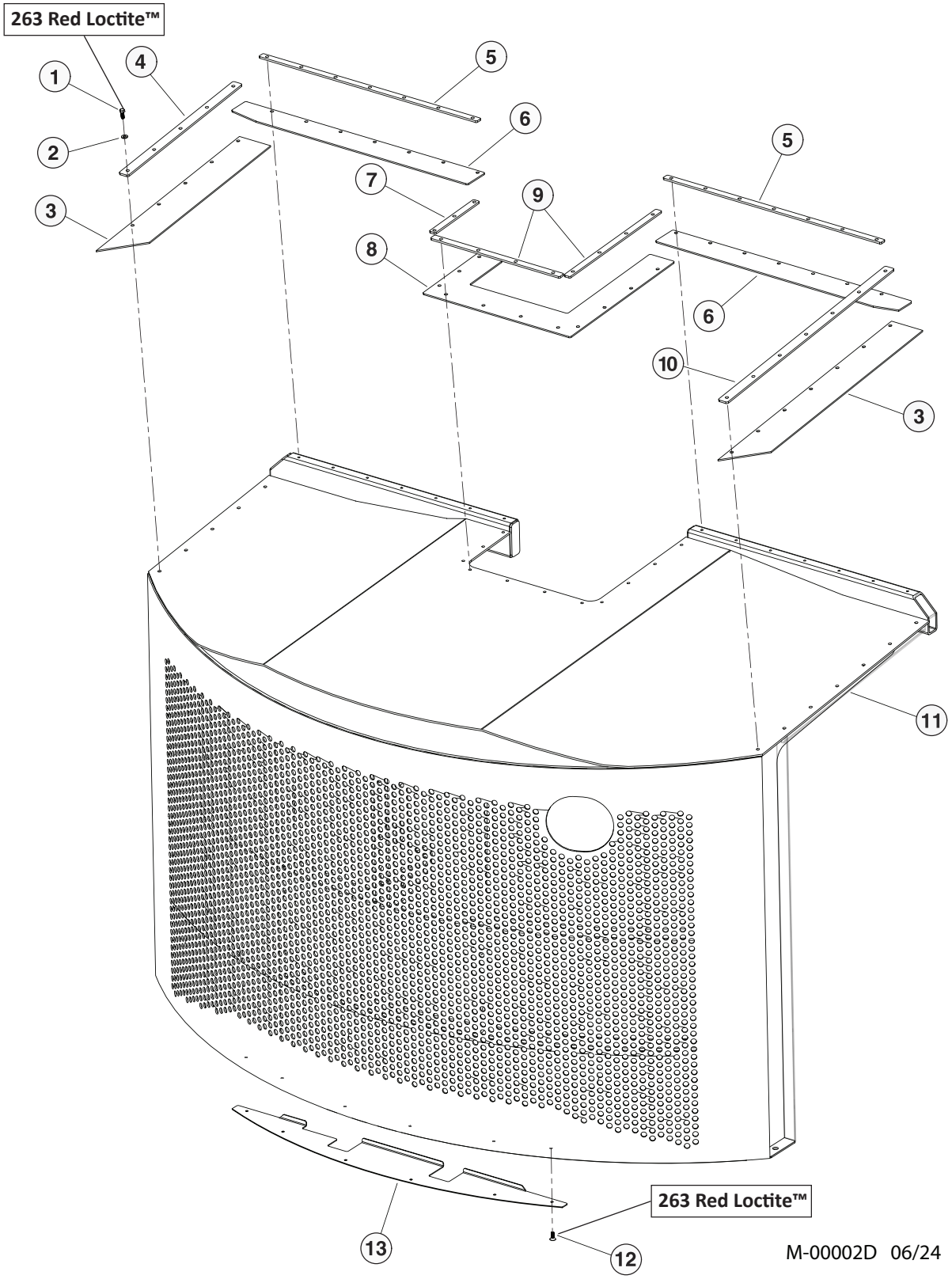

M100-00020 - GULLWING DOOR DEBRIS GUARDS

Item	Part #	Description	Qty.
1	11707	BOLT - .375” X 1” **263 RED LOCTITE™**	33
2	10802	WASHER, FLAT - .375”	41
3	60428	RUBBER, GULLWING - LONG (RH)	1
4	60427	PLATE, GULLWING RUBBER HOLD DOWN - SIDE	1
5	60099	BAR, RUBBER MOUNT	2
6	60465	RUBBER, GULLWING FRONT	2
7	60471	BAR, MOUNTING - CENTER - SHORT	1
8	60469	RUBBER, GULLWING - CENTER (FRONT)	1
9	60470	BAR, MOUNTING - CENTER - LONG	2
10	60426	PLATE, GULLWING RUBBER HOLD DOWN - SIDE	1
11	58226	BOLT, BUTTON HEAD 1/4-20X3/8(GULL SHEILD	6
12	60533	GUARD, GULLWING LOWER **263 RED LOCTITE™**	1
13	60429	RUBBER, GULLWING - SHORT (LH)	1

M100-00030 - GULLWING DOOR EXHAUST TIP

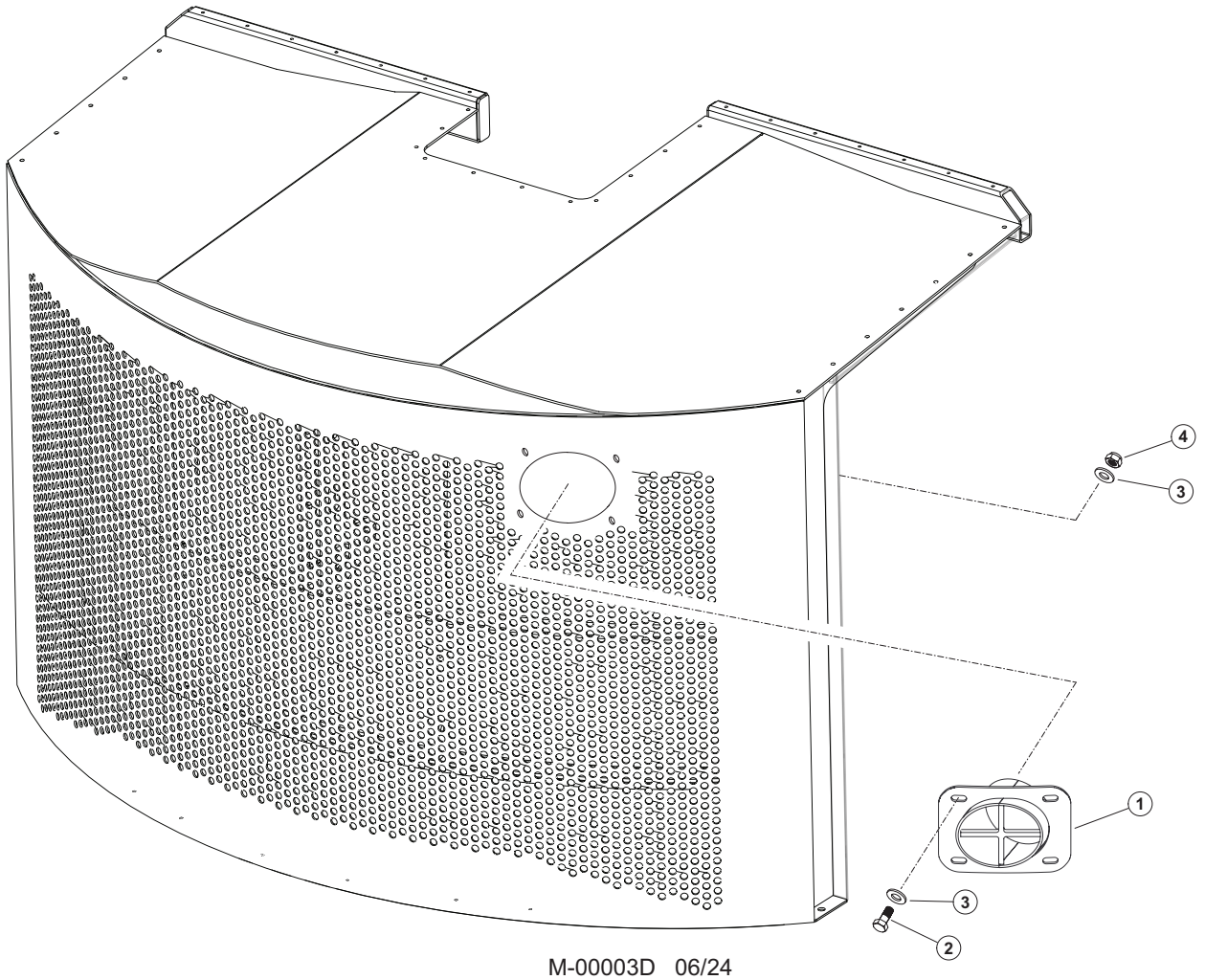

M-00003D 06/24

Item	Part #	Description	Qty.
1	60135	GUARD, EXHAUST TIP CUMMINS STAGE 5	1
2	50100	BOLT - .5” X 1.25”	4
3	10804	WASHER, FLAT - .5”	8
4	10815	NUT, LOCK - .5”	4

M100-00035 - GULLWING WALKWAY

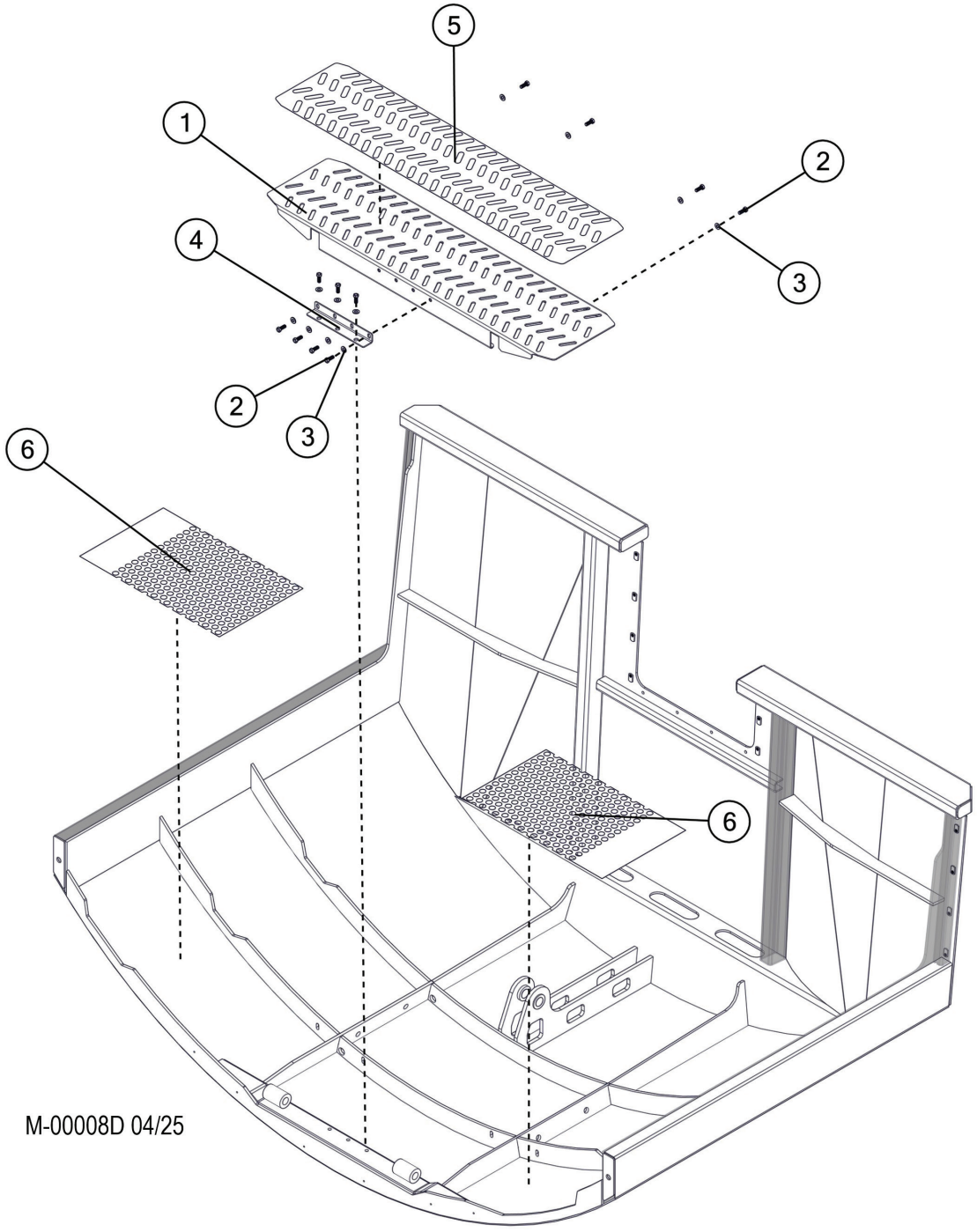

Item	Part #	Description	Qty.
1	65941	WELDMENT, GULLWING WALKWAY	1
2	11707	BOLT - .375” X 1”	11
3	10802	WASHER, FLAT - .375”	11
4	65944	BRACKET, SUPPORT	1
5	65943	NON-SKID TAPE, GULLWING WALKWAY	1
6	65929	NON-SKID TAPE, GULLWING	2

M100-00040 - UPPER TURNTABLE DOOR & COVERS

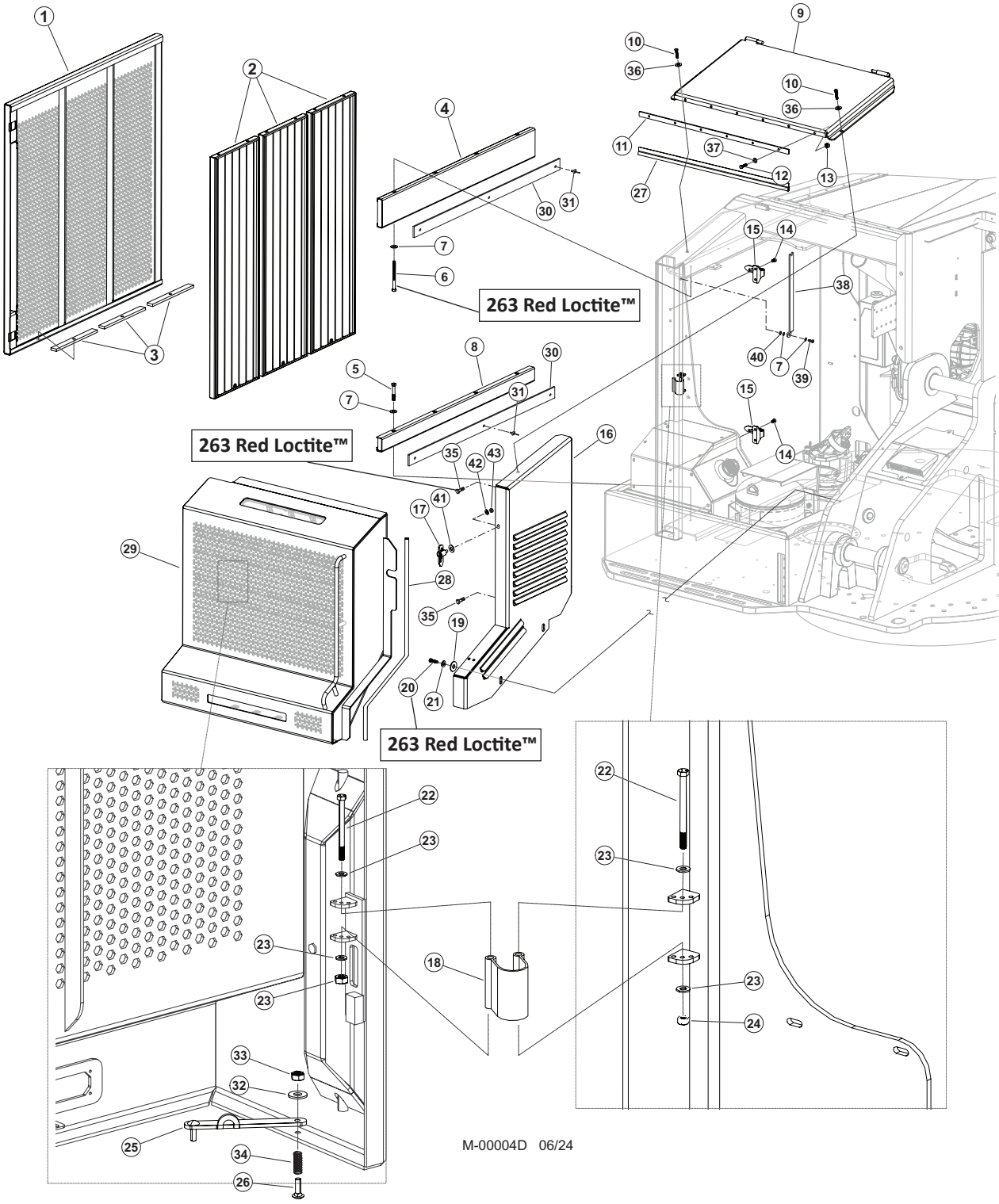

M100-00040 - UPPER TURNTABLE DOOR & COVERS

Item	Part #	Description	Qty.
1	60650	DOOR, COOLER	1
2	60668	SCREEN, RADIATOR - D MOD UPDATE COOLER	3
3	46923	RUBBER, COOLER DOOR SCREEN MOUNT	3
4	60623	WELDMENT, COOLER SILL D+ TOP	1
5	59108	BOLT - .375” X 3.75”	4
6	58217	BOLT, ALLEN 3/8-16 X 7 COOLER SILL D **263 RED LOCTITE™**	4
7	15528	WASHER, SAE FLAT - .375”	10
8	60627	WELDMENT, SILL COOLER BOTTOM D+	1
9	60635	DOOR, COWL - TOP	1
10	11707	BOLT - .375” X 1”	2
11	60141	BAR, RUBBER MOUNT FRONT DOOR	1
12	10822	BOLT, 5/16”x1 1/4”	6
13	10812	NUT, LOCK - 5/16”	6
14	58225	BOLT, CAM LATCH 3/8-16x3/4” COUNTERSUNK	4
15	51657	LATCH, CAM - DOOR R.H. (RADIATOR-GULLW)	2
16	606200	PANEL, INNER FRONT - D	1
17	19771	LATCH, CAM - SHORT (PUMP GUARD)	1
18	51981	STRAP, DOOR STOP	1
19	54148	WASHER, BURNED - .66” X 2” x 1/4”	2
20	50100	BOLT - .5” X 1.25” **263 RED LOCTITE™**	2
21	10804	WASHER, FLAT - .5”	4
22	10819	BOLT - .25” X 3.25”	2
23	10757	WASHER, SAE FLAT - .25”	4
24	10811	NUT, LOCK - .25”	2
25	60549	BAR, PROP ROD D - SERIES	1
26	59111	SCREW, 5/16-18x2.0” FLAT HD	1
27	24925	CHANNEL, EDGE PROTECTOR - 3/16” BULB	3.5’
28	18126	WEATHERSTRIPPING, RUBBER-DOOR SEAL	4
29	60615	DOOR, FRONT SWINGOUT	1
30	61111	RUBBER	2
31	59104	RIVET, BLIND, 3/16” DIA, DOME HD	6
32	10801	WASHER, FLAT - .3125”	1
33	15509	NUT, NYLOCK - .25”	1
34	58113	SPRING	1
35	10739	BOLT - .5” X 1.5” **263 RED LOCTITE™**	2
36	10802	WASHER, FLAT - .375”	2
37	15559	WASHER, SAE FLAT - .3125”	12
38	52619	DOOR, COWL - TOP ; PROP ROD	1
39	10402	BOLT - .375” X 1.25”	1
40	59110	NUT, JAM, 3/8X16	1
41	10771	WASHER, SAE FLAT - .625”	1
42	15534	WASHER, SAE FLAT - .5”	1
43	10815	NUT, LOCK - .5”	1

M100-00050 - UPPER TURNTABLE DOOR & COVERS

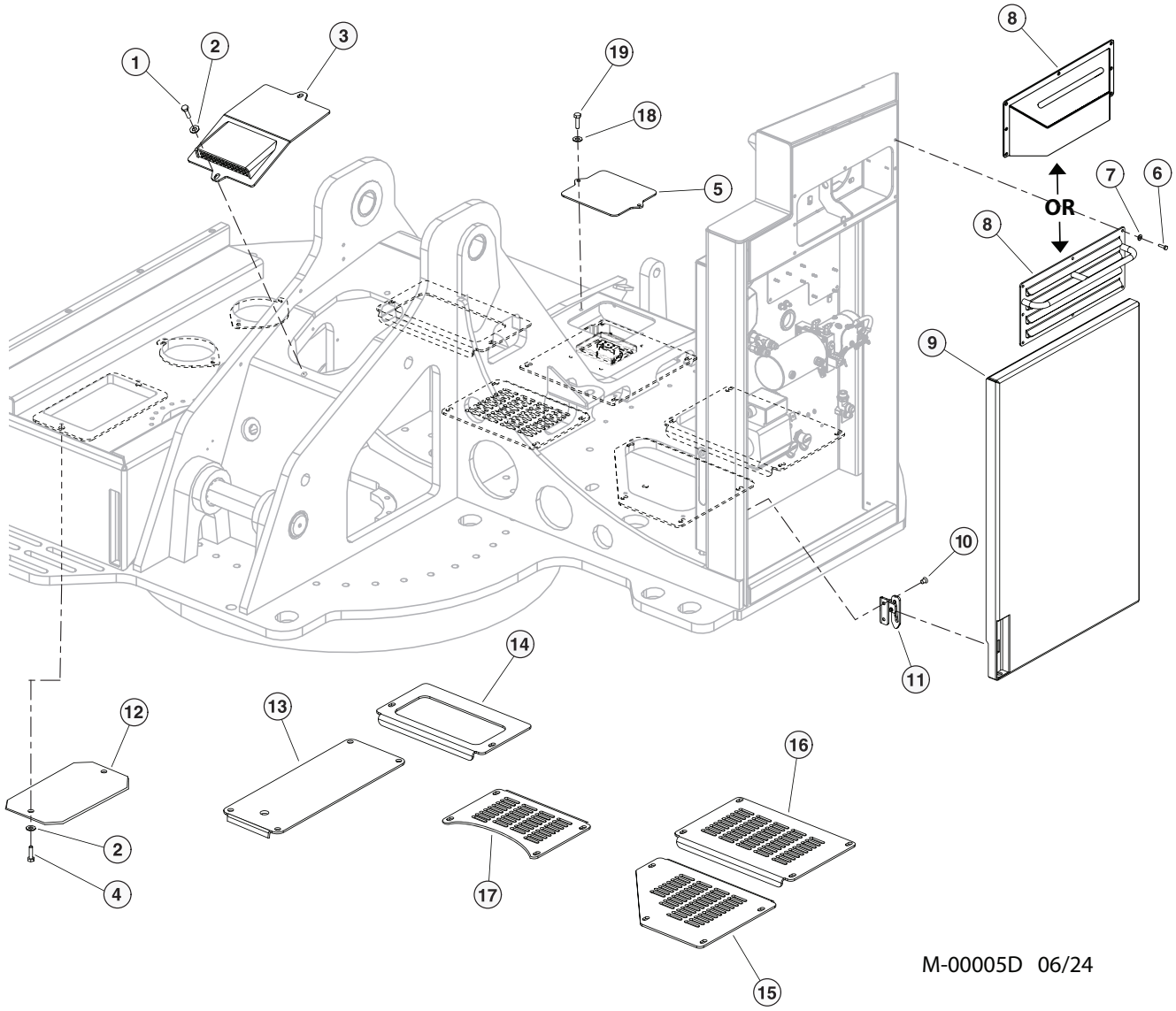

M-00005D 06/24

M100-00050 - UPPER TURNTABLE DOOR & COVERS

Item	Part #	Description	Qty.
1	18933	BOLT - .5” X 1.75”	2
2	10804	WASHER, FLAT - .5”	24
3	60600	COVER, ROTARY MANIFOLD - VENTED	1
4	10783	BOLT - .5” X 1”	22
5	54569	COVER, UPPER REAR TUBELINE	1
6	15589	BOLT - .3125” X 1”	8
7	10801	WASHER, FLAT - .3125”	8
8	65429	WELDMENT, INTAKE COVER, **S/N: TL755D-1217-061125 -**	1
8	48927	GUARD,AIRINTAKE W/HANDLE HOLES	1
9	47962	WELDMENT, DOOR - ELECTRICAL	1
10	58225	BOLT, CAM LATCH 3/8-16X3/4 COUNTERSUNK	2
11	51658	LATCH, CAM - DOOR L.H. (OIL COOLER)	1
12	60748	COVER, HOC ACCESS	1
13	60831	COVER, COOLER ACCESS	1
14	65476	WELDMENT, COVER-OIL PAN	1
15	46469	COVER, TRIPLE DRIVE - FRONT	1
16	46468	COVER, TRIPLE DRIVE - REAR	1
17	47892	COVER, OIL PAN - FRONT	1
18	15528	WASHER, SAE FLAT - .375”	2
19	11707	BOLT - 0.375” X 1”	2

M100-00060 - HEAT SHIELD, PADDING, AND TRIM INSTALLATION

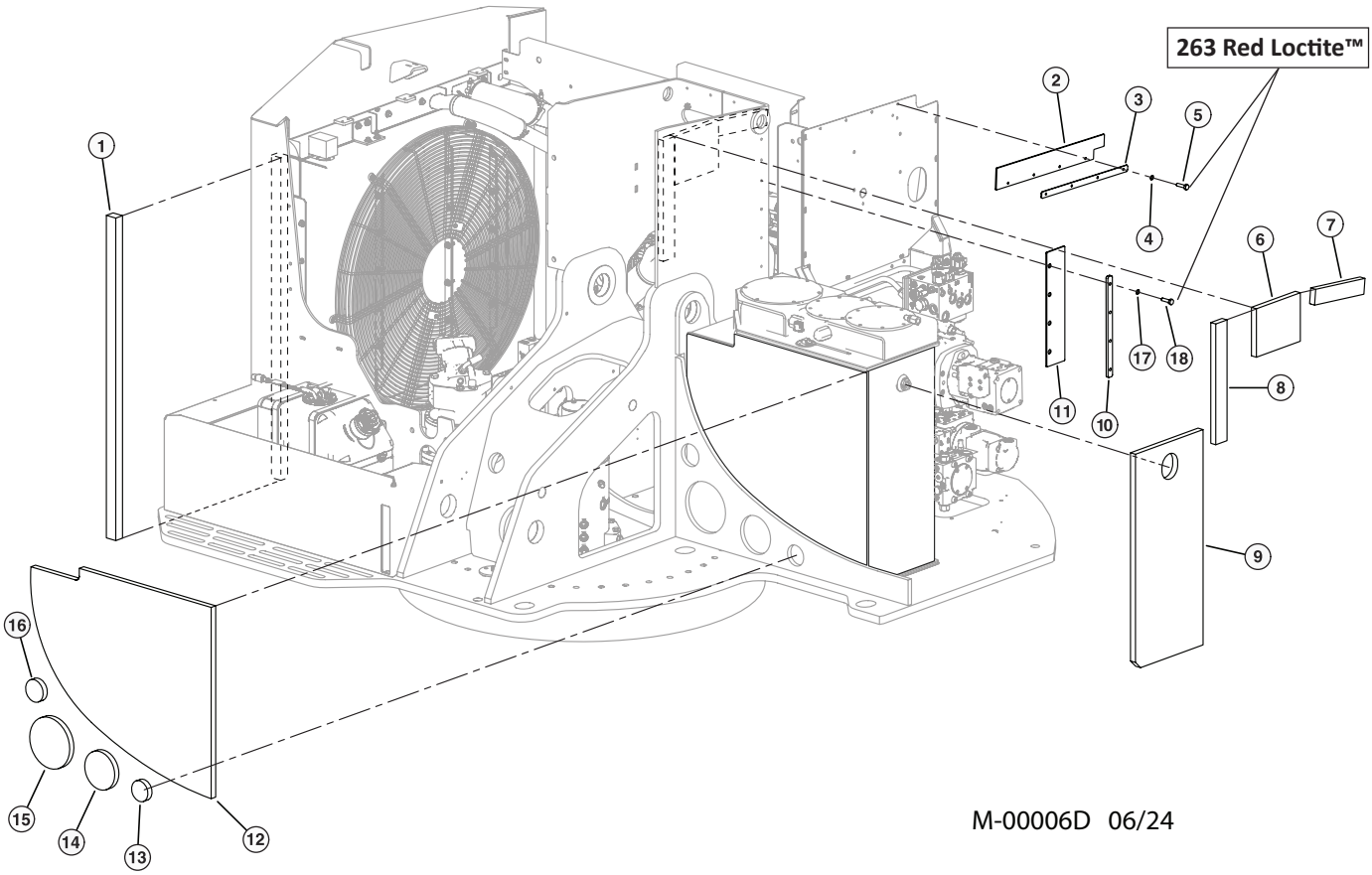

Item	Part #	Description	Qty.
1	58118	FOAM, CLOSED CELL - 1.5” X 1.875” X 51”	1
2	47206	RUBBER, ENGINE BARRIER PANEL	1
3	47205	BAR, BARRIER PANEL - ENGINE	1
4	10757	WASHER, SAE FLAT - .25”	4
5	15576	BOLT - .25” X 1.00” **263 RED LOCTITE™**	4
6	47344	FOAM, CAB TO CHIMNEY	1
7	60542	FOAM, CAB TO CENTER (CUT TO SIZE)	1
8	60542	FOAM, CAB TO CENTER (CUT TO SIZE)	1
9	47286	INSULATION, HYD TANK TO PANEL	1
10	60349	PLATE, RUBBER HOLD DOWN CHIMNEY	1
11	60479	RUBBER, DEBRIS GUARD SCRAPPER	1
12	58038	INSULATION, CAB TO HYD TANK D-MOD	4
13	42845	TRIM, PANEL - CIRCLE - 3.25”	1
14	42844	TRIM, PANEL - CIRCLE - 5.75 OD	1
15	42741	TRIM, PANEL - CIRCLE - 7.75” OD	1
16	42843	TRIM, PANEL - CIRCLE 3.38” O.D.	1
17	15528	WASHER, SAE FLAT - .375”	4
18	11707	BOLT - .375” X 1” **263 RED LOCTITE™**	4

M100-00070 - STRUCTURE PANELS

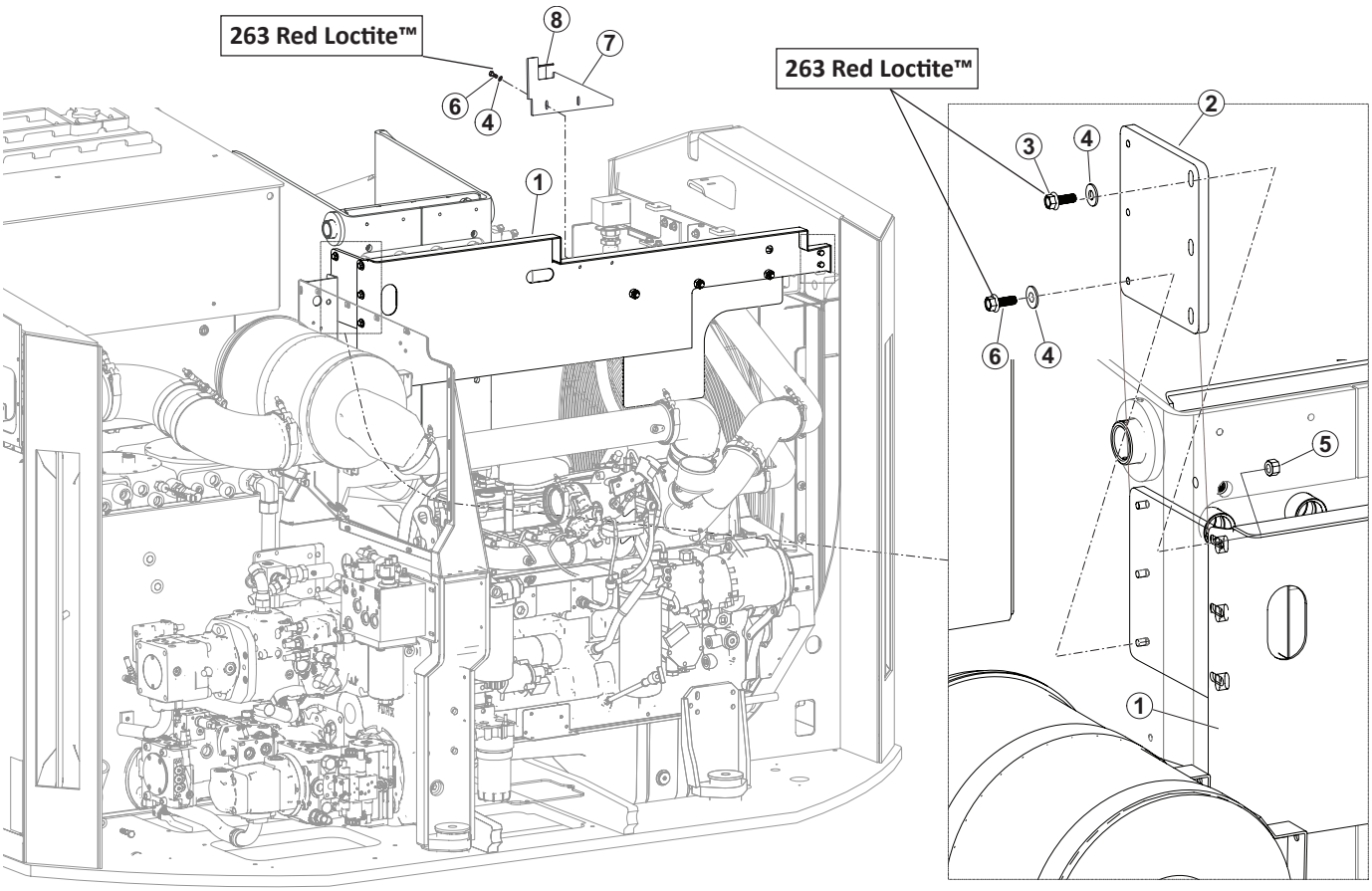

M-00007D 06/24

Item	Part #	Description	Qty.
1	60443	BARRIER, COOLER PANEL	1
2	60508	PLATE, BARRIER PANEL MTG	1
3	15542	BOLT - .375” X 3/4” **263 RED LOCTITE™**	3
4	10802	WASHER, FLAT - .375”	3
5	11707	BOLT - .375” X 1”	3
6	10802	WASHER, FLAT - .375” **263 RED LOCTITE™**	3
7	60737	PLATE, BARRIER PANEL - FILLER	3
8	24925	CHANNEL, EDGE PROTECTOR - 3/16”BULB(STR)	1

M-2228700 - UPPER TURNTABLE DOOR & COVERS - (DOOR PROP)

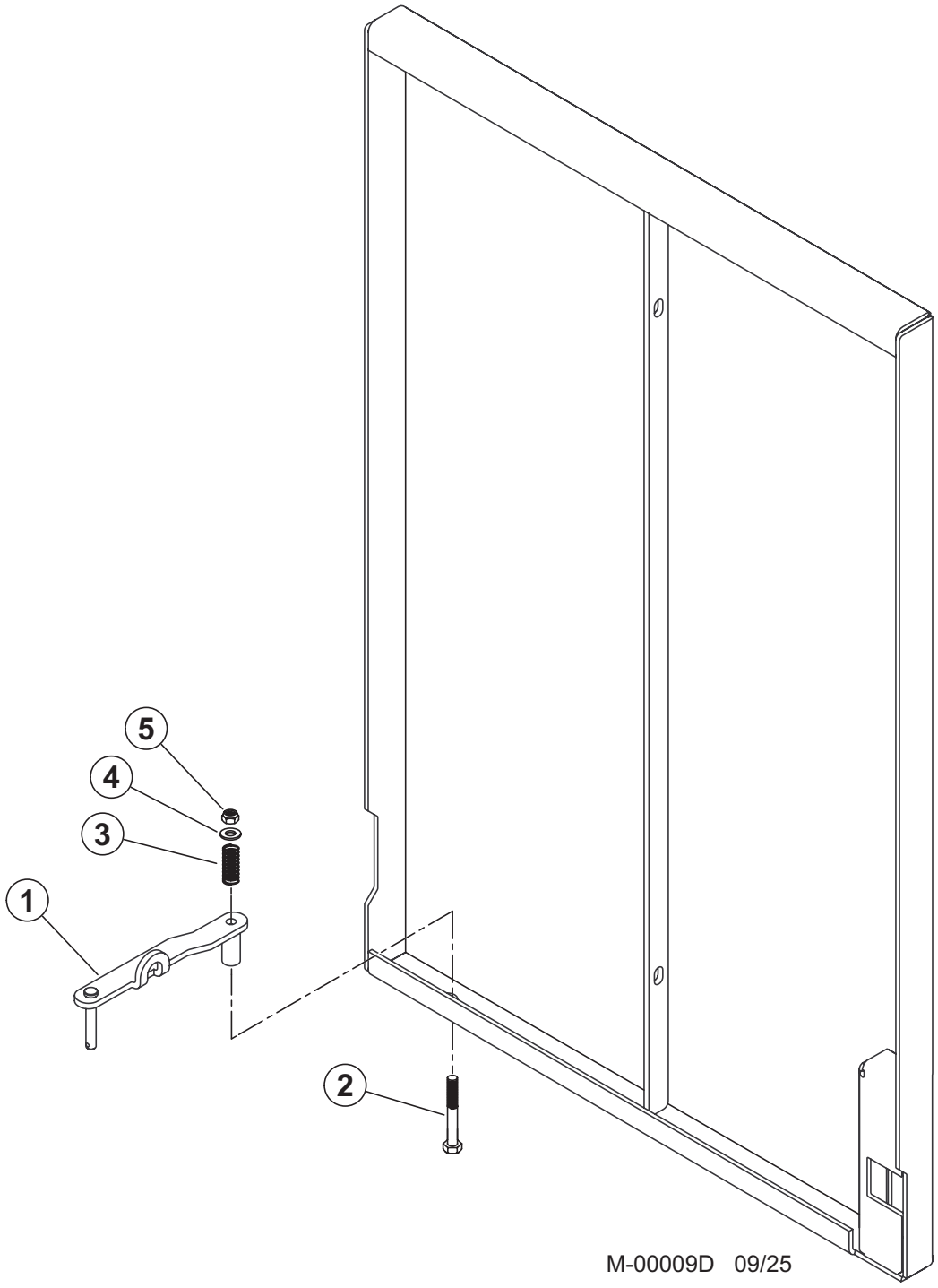

Item	Part #	Description	Qty.
1	608150	ASSY, PROP ROD - EU	1
2	23265	BOLT - .375” X 2.25”	1
3	58113	SPRING, DOOR - PROP ROD	1
4	15528	WASHER, SAE FLAT - .375”	1
5	10813	NUT, LOCK - .375”	1

SWING CIRCLE AND RELATED PARTS - (N)

N200-00100 - SWING BEARING

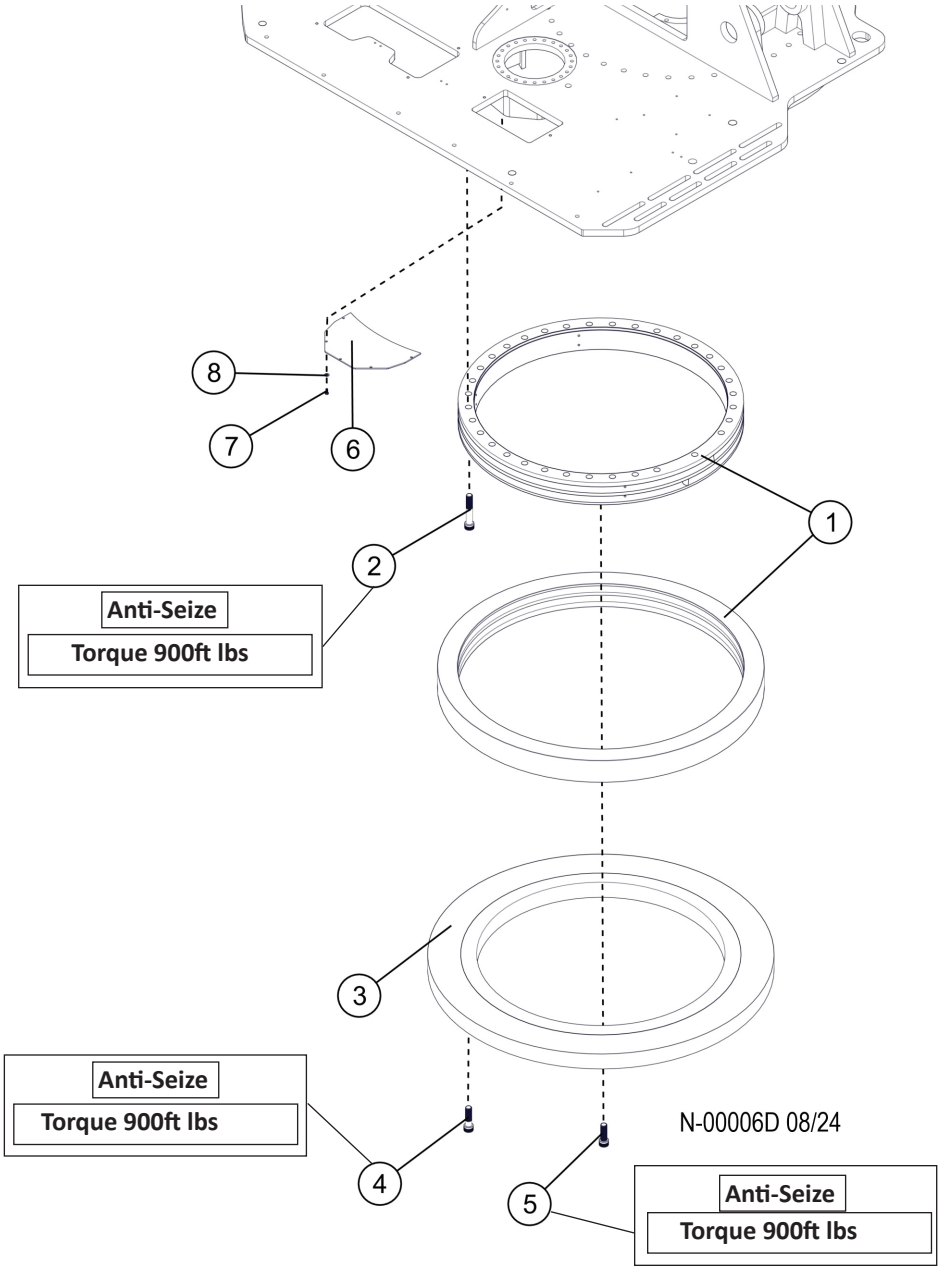

Item	Part #	Description	Qty.
1	55589	BEARING, SWING - DOUBLE BALL (TL765, 755)	1
2	57244	BOLT, ALLEN HEAD - 1” X 5.5” **ANTI-SEIZE (TORQUE 900FT LBS**	34
3	47030	PLATE, BRG SUPPORT RING - MACHINED	1
4	15577	BOLT, ALLEN HEAD - 1” X 3.5” **ANTI-SEIZE (TORQUE 900FT LBS**	32
5	58196	BOLT, ALLEN HEAD - 1” X 3.0” **ANTI-SEIZE (TORQUE 900FT LBS**	4
6	48691	COVER, ACESS - PINION GEAR	1
7	15605	BOLT - .3125” X .75”	5
8	15559	WASHER, SAE FLAT - .3125”	5

N200-00100 - SWING BEARING

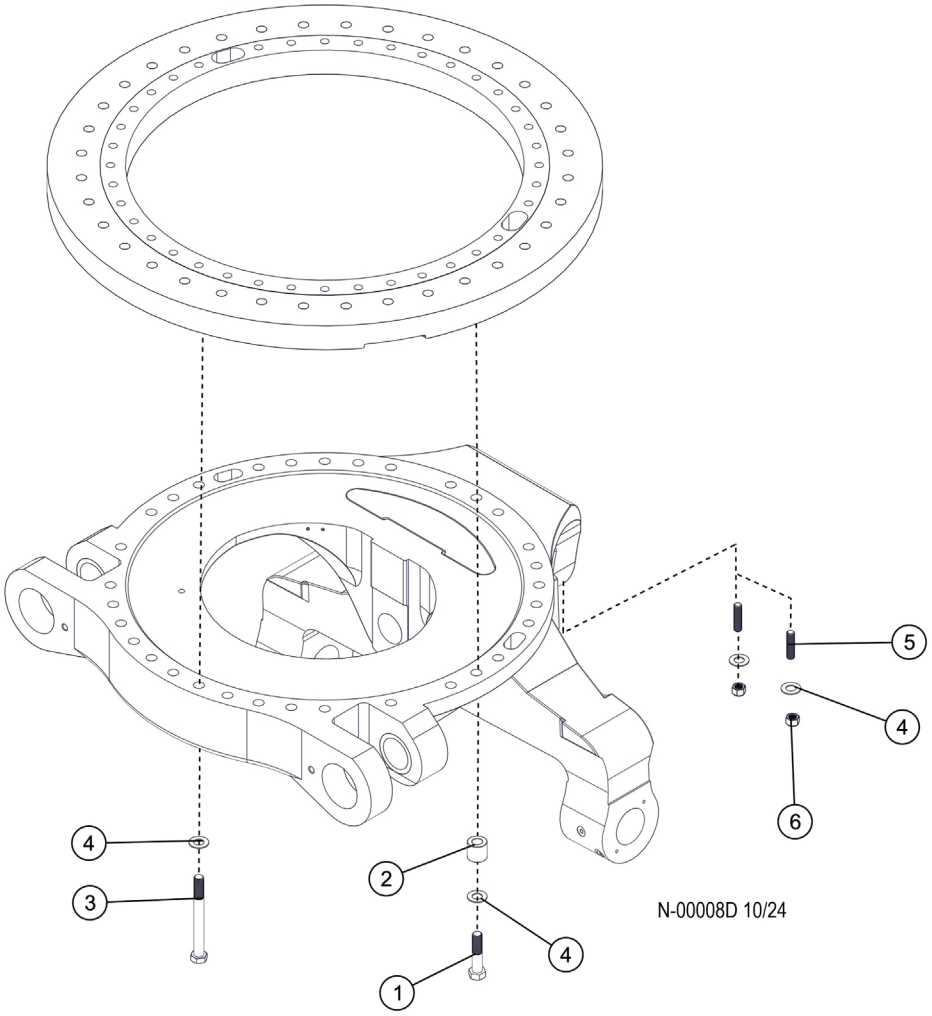

Item	Part #	Description	Qty.
1	50263	BOLT - 1” X 5.5”	17
2	12463	SPACER, BOLT - LOWER TURNTABLE 1.88L	16
3	18529	BOLT - 1” X 8.5”	13
4	18532	WASHER, SAE FLAT - 1” (EXTRA THICK)	31
5	53586	STUD - 1”- 8 X 7” TRACK MACHINE	2
6	19073	NUT, HEX - 1”	2

N100-00010 - SWING MOTOR INSTALLATION

NOTE: HYDRAULIC FITTINGS GET 545 LOCTITE™

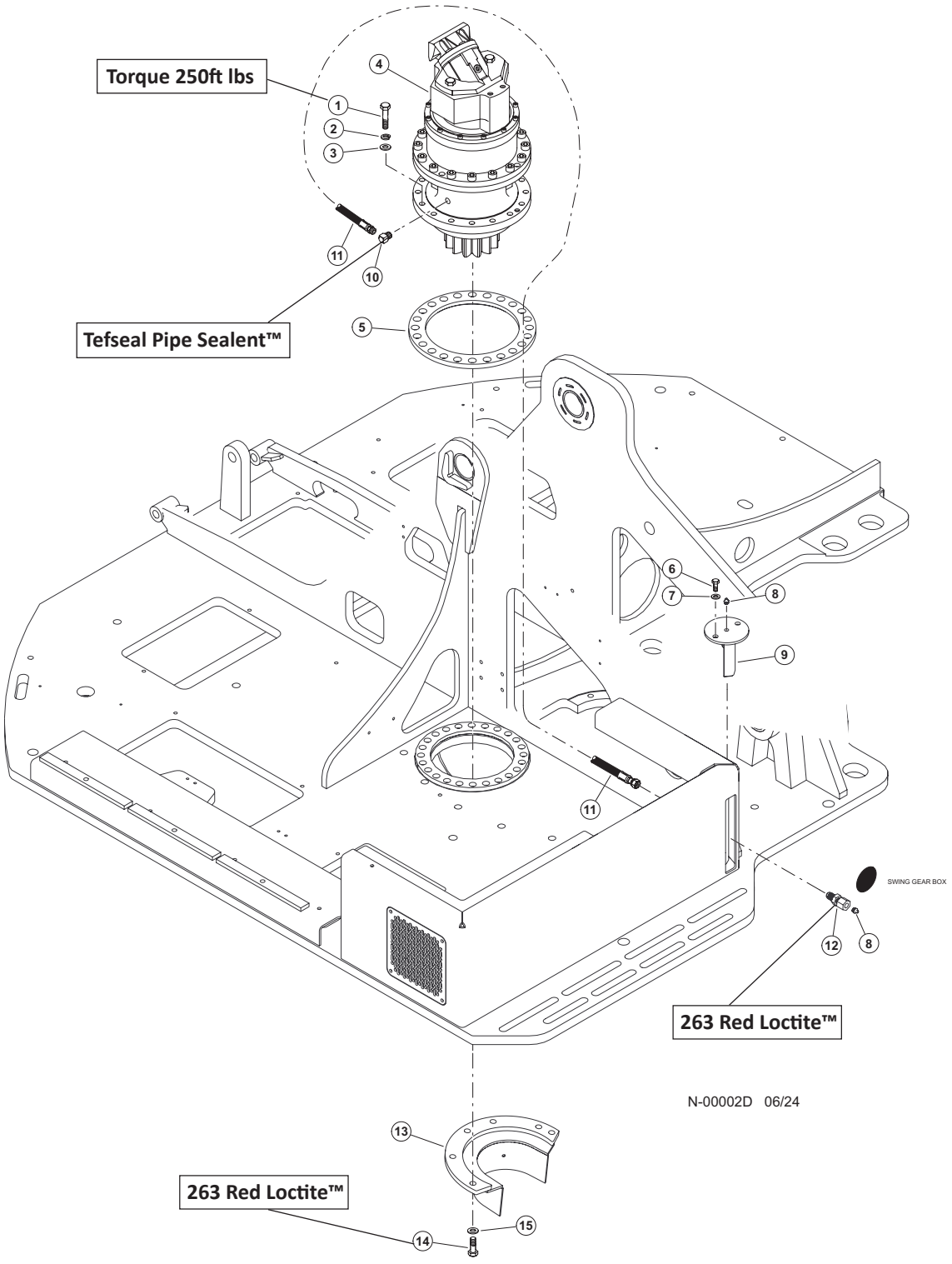

N100-00010 - SWING MOTOR INSTALLATION

Item	Part #	Description	Qty.
1	57870	BOLT - .625” X 2.75” **(TORQUE 250FT LBS)**	24
2	57871	WASHER, SURELOK - 5/8”	24
3	23210	WASHER, SAE FLAT - .625” (EXTRA THICK)	24
4	57213	MOTOR, SWING - L&S 32.5:1 / 56CC (TL765C	1
5	54026	RING, SPACER SWING GEARBOX	1
6	15605	BOLT - .3125” X .75”	2
7	15559	WASHER, SAE FLAT - .3125”	2
8	58394	ZERK, GREASE - 1/8” 90DEG	2
9	17612	CUP, BULL GEAR GREASE - WIDE GEAR	1
10	22281	ELBOW, 1/8-27 NPTF(M), 1/8-17 NPTF(F),90 **TEFSEAL PIPE SEALENT™**	1
11	57724	HOSE, GREASE 2054 02-02PS-04JS SW	1
12	15658	CONNECTOR, STR BULKHEAD - 2239-2-4S **263 RED LOCTITE™**	1
13	54140	GREASE CUP, BULL GEAR COVER	1
14	10739	BOLT, 0.5” X 1.5” **263 RED LOCTITE™**	3
15	15534	WASHER, 0.5”	3

N100-00011 - SWING MOTOR COMPONENTS

NOTE: APPLY GREASE TO O-RINGS

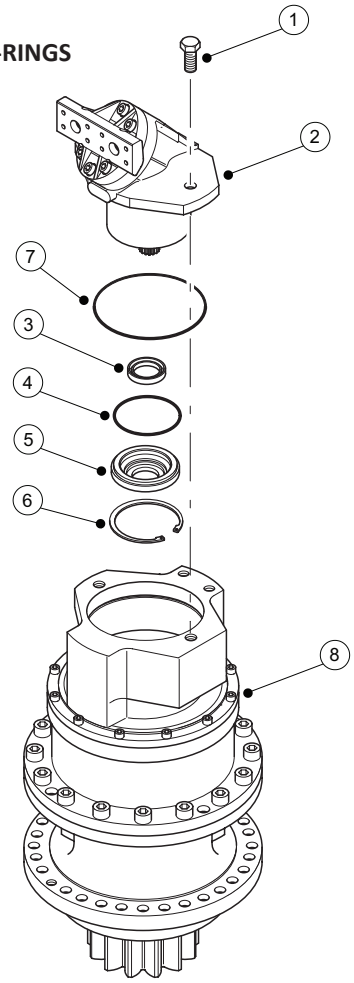

Parts T3839 **05/23**

Item	Part #	Description	Qty.
	57213	MOTOR, SWING - L&S 32.5:1 / 56CC (TL765C)	1
1	20661	BOLT - 16MM-2.0P X 35MM	2
2	17238	MOTOR, HYDRAULIC - REXROTH A2FE56 CC	1
3	51638	SEAL, SHAFT - 56CC	1
4	51639	O-RING, FRONT COVER - 56CC	1
5	21578	COVER, FRONT	1
6	21579	RING, SEAL RETAINING	1
7	21580	O-RING, MOTOR PILOT	1
8	R916631081	GEARBOX - LOHMANN ECCENTRIC	1
	80003SK	SEAL KIT, GEARBOX HOUSING (INSIDE)	1
		BREAK HOUSING SEALS:	
	R916461473	LARGE DIAMETER	1
	R916461674	SMALL DIAMETER	1
	57710	BRAKE DISC KIT	1

Note:
Due to warranty policy restrictions imposed by component suppliers, it is not recommended that the component be disassembled further than is shown in the illustration.

N100-00012 - SWING MOTOR COMPONENTS

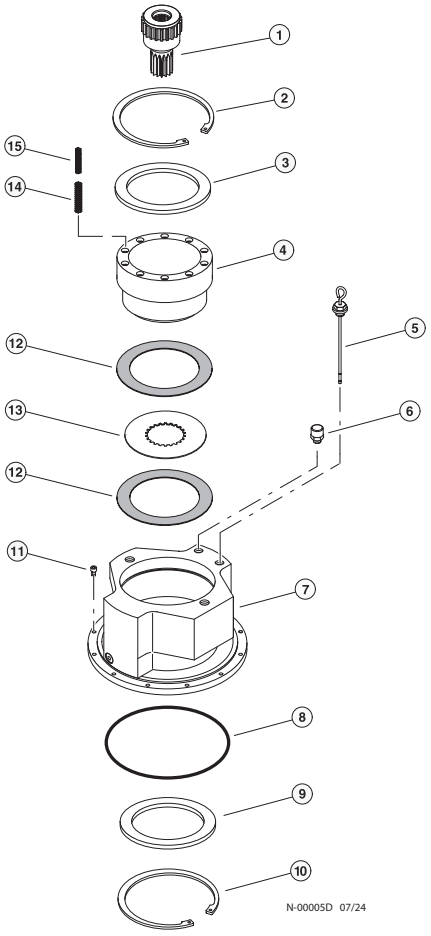

NOTE: APPLY GREASE TO O-RINGS

Item	Part #	Description	Qty.
	54394	GEARBOX - Lohmann ECCENTRIC	1
1	21565	SHAFT, BRAKE	1
2	21566	RING, SNAP - UPPER BRAKE	1
3	21567	PLATE, BACK-UP - UPPER BRAKE	1
4	21568	PISTON, BRAKE	1
5	21569	DIPSTICK	1
	21571	RING, SEAL	1
6	21570	BREATHER	1
	21571	RING, SEAL	1
7	NO P/N AVAILIBLE	HOUSING, BRAKE	1
8	21572	O-RING, BRAKE HOUSING	1
9	21573	PLATE, BACK-UP - LOWER BRAKE	1
10	21574	RING, SNAP - LOWER BRAKE	1
11	21575	BOLT, ALLEN HEAD - 8MM X 25MM	12
12	INCLUDED WITH 57710	DISC, BRAKE	5
13	INCLUDED WITH 57710	DISC, SPACER	4
14	INCLUDED WITH 57710	SPRING, OUTER	10
15	INCLUDED WITH 57710	SPRING, INNER	10
	57710	BRAKE DISC KIT	1

Note:
Due to warranty policy restrictions imposed by component suppliers, it is not recommended that the component be disassembled further than is shown in the illustration.

N200-00100 - SWING MOTOR INSTALLATION

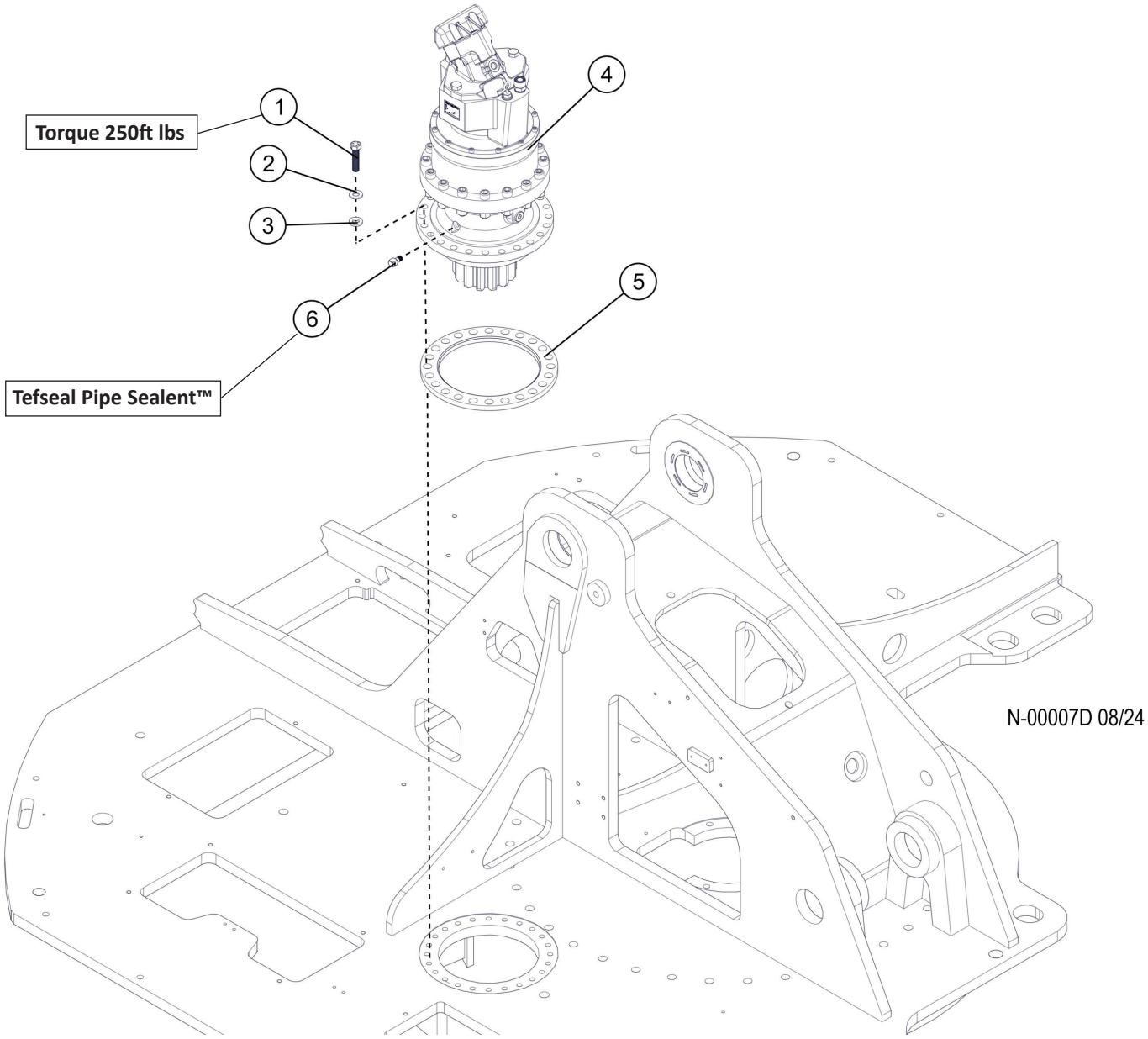

Item	Part #	Description	Qty.
1	57870	BOLT - .625” X 2.75” **(TORQUE 250FT LBS)**	24
2	57871	WASHER, SURELOK - 5/8”	24
3	23210	WASHER, SAE FLAT - .625” (EXTRA THICK)	24
4	57213	SWING MOTOR	1
5	54026	RING, SPACER SWING GEARBOX	1
6	22281	ELBOW, 1/8-27 NPTF(M), 1/8-17 NPTF(F),90 **TEFSEAL PIPE SEALENT™**	1

N100-00020 - ROTARY MANIFOLD INSTALLATION

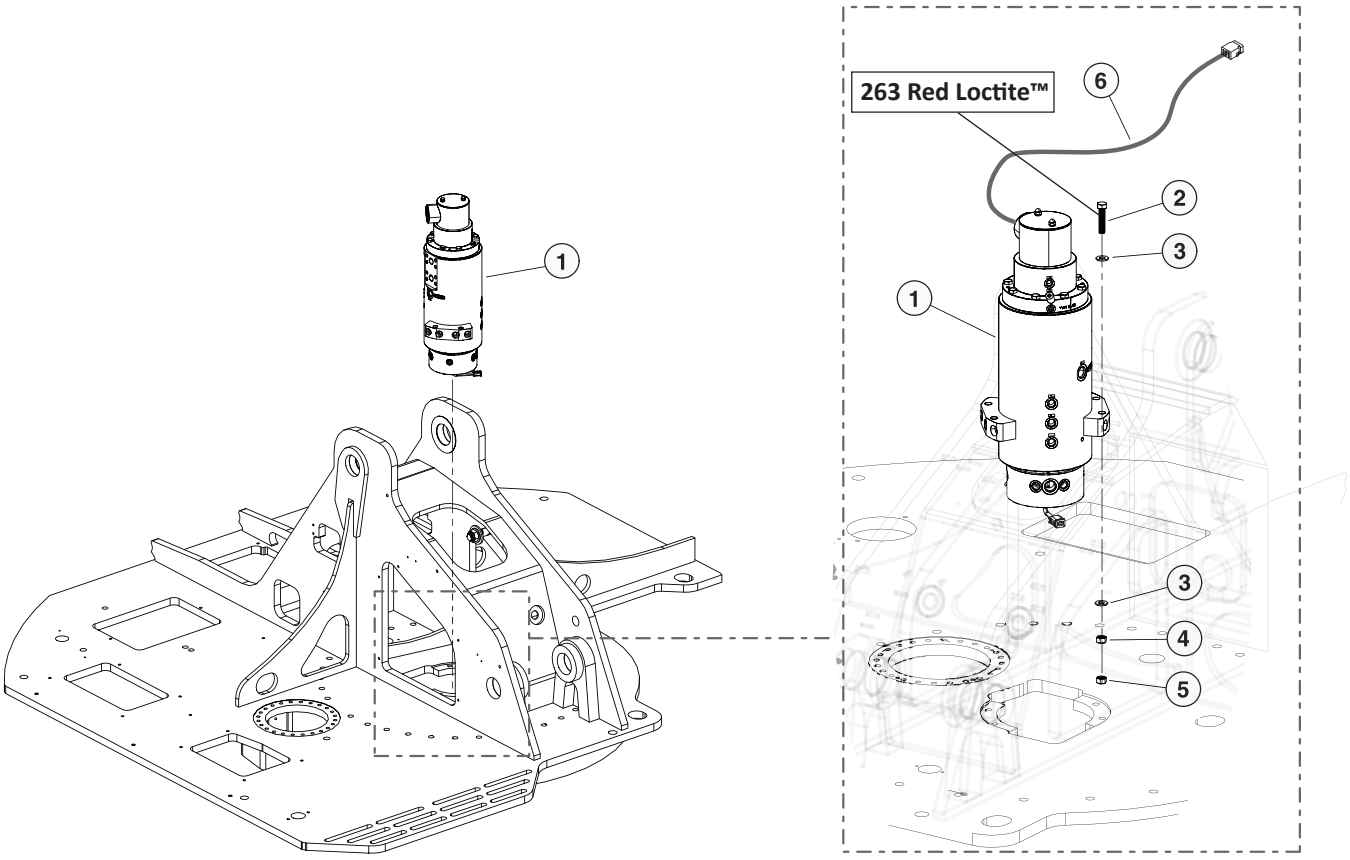

N-00003D 06/24

Item	Part #	Description	Qty.
1	650670	MANIFOLD, ROTARY - 14 PORT TRACK (HYDRO	1
2	10838	BOLT - .625 X 5" **263 RED LOCTITE™**	4
3	23210	WASHER, SAE FLAT - .625" (EXTRA THICK)	8
4	17515	NUT, HEX - .625"	4
5	10816	NUT, LOCK - .625"	4
6	57210	HARNESS, CAB TO RM TRACK-AUTO LEVEL	1

N100-00030 - ROTARY MANIFOLD SWIVEL LOCK ARM

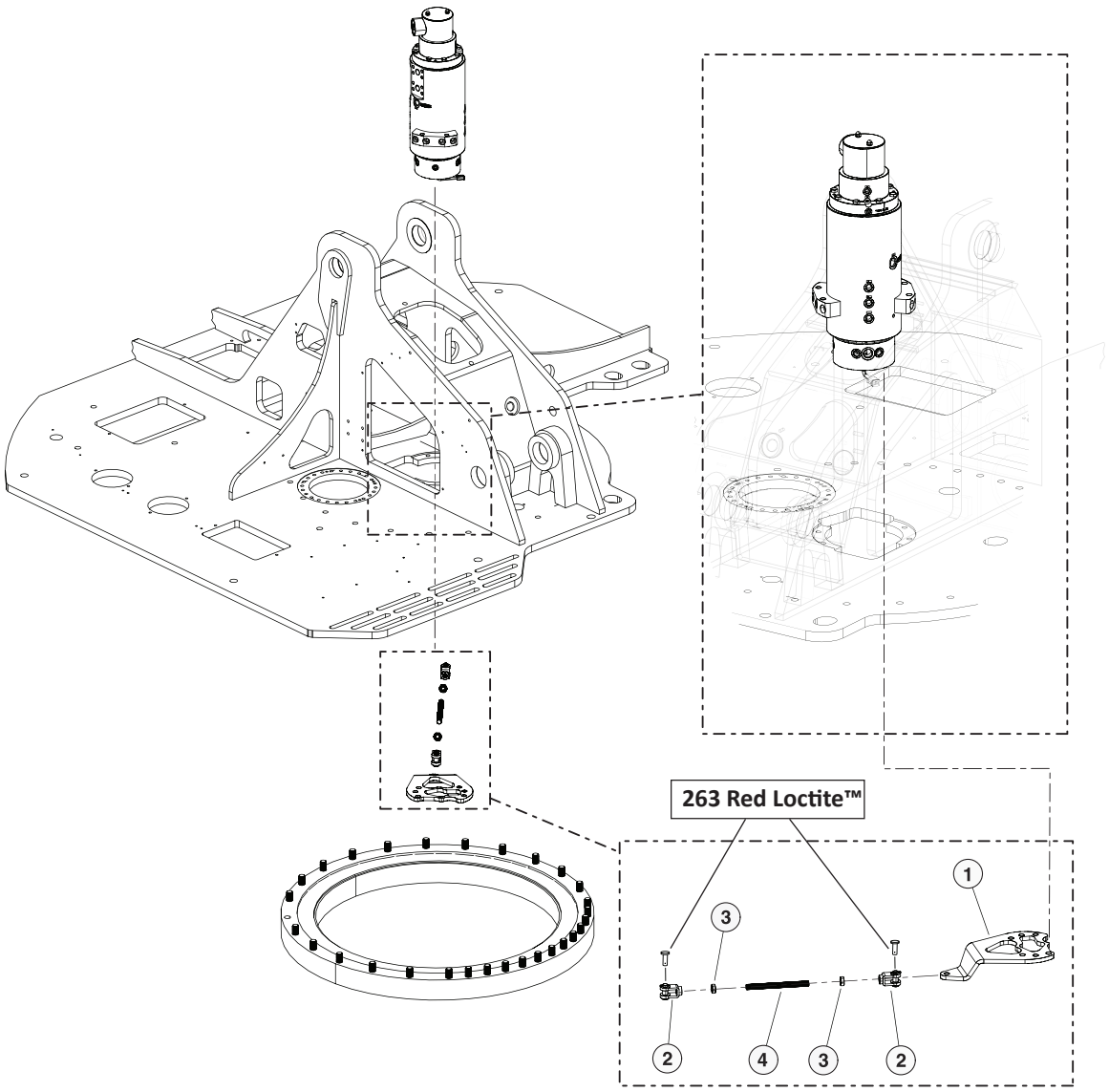

N-00004D 06/24

Item	Part #	Description	Qty.
1	605060	BRACKET, SWIVEL LOCK ARM	1
2	57502	YOKE, ROTARY MANIFOLD	2
3	52395	NUT, JAM .63-18NF HEX (PLATED)	2
4	52394	STUD, 5/8”-18NF X 7.5 LG (ZINC PLATED	1

TRAVEL AND LOWER PIPING - (P)

P100-00010 - U/C HYD. HOSE U, 11_2 CARBODY, LVL - 48L C/B - 755 LH

NOTE: HYDRAULIC FITTINGS GET 545 LOCTITE™

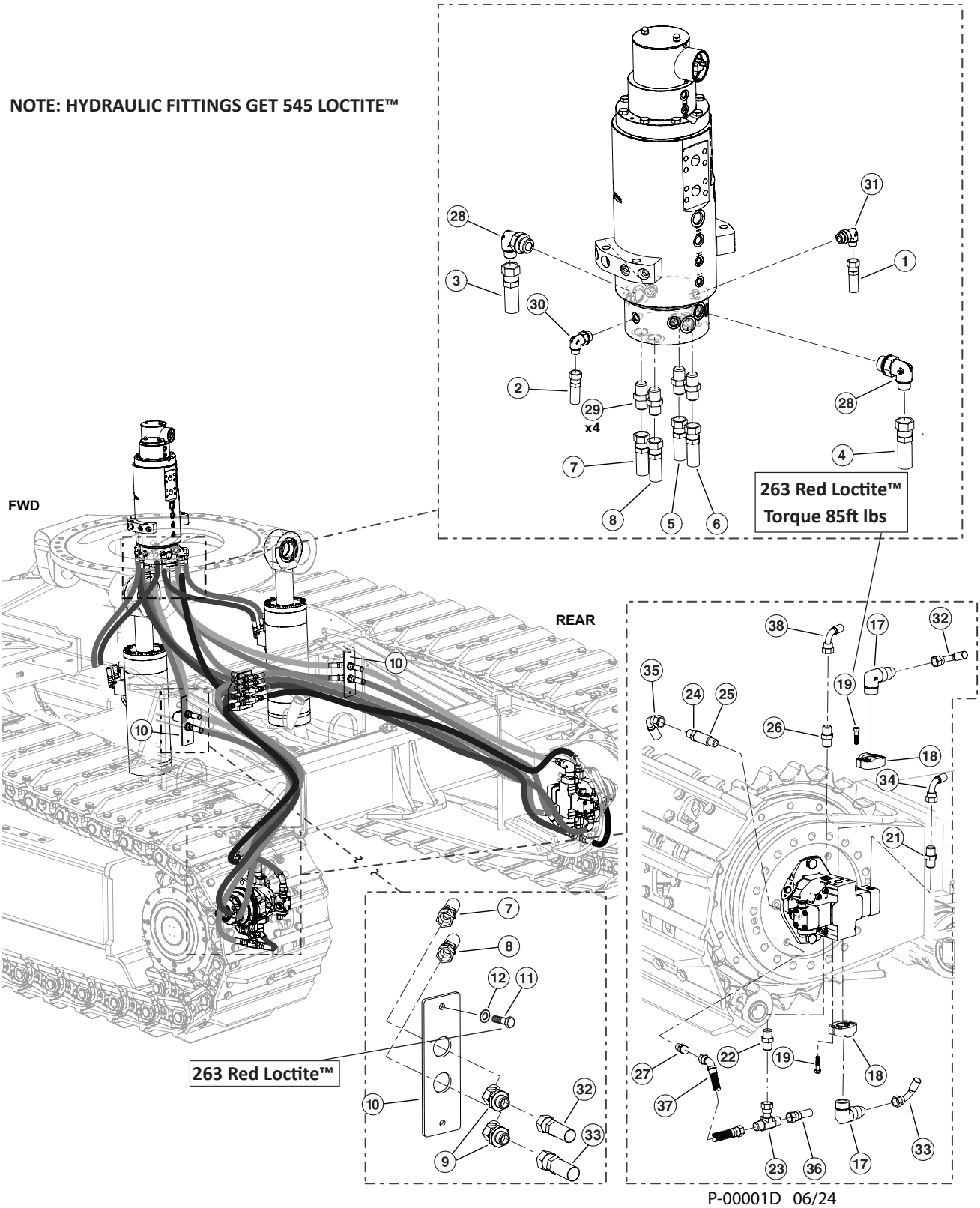

P-00001D 06/24

P100-00010 - U/C HYD. HOSE U, 11_2 CARBODY, LVL - 48L C/B - 755 LH

Item	Part #	Description	Qty.
	57458	**KIT, FITTING - TRACK TRUNK**	1
	57457	**KIT, FITTING - TRACK LEVELING**	1
1	57499 - (KIT)	HOSE ASSY - 387TC51 04-04OS-04OS-W - (SHIFT - RM #3 TO BULKHEAD)	1
2	57499 - (KIT)	HOSE ASSY - 387TC61 06-06OS-06OS-W - (BRAKE - RM #1 TO BULKHEAD)	1
3	57499 - (KIT)	HOSE ASSY - 187TC61 12-12OS-12OS-W - (FLUSH - RM #7 TO BULKHEAD)	1
4	57499 - (KIT)	HOSE ASSY - 187TC61 12-12OS-12OS-W - (CASE DRAIN - RM V2 TO BULKHEAD)	1
5	57499 - (KIT)	HOSE ASSY - 797TC61 16-16OS-16OS-SW - (DRIVE LINE - RM #11 TO TOP RH BULKHEAD)	1
6	57499 - (KIT)	HOSE ASSY - 797TC70 16-16OS-16OS-SW - (DRIVE LINE - RM #9 TO BOTTOM RH BULKHEAD) 1	1
7	57499 - (KIT)	HOSE ASSY - 797TC72 16-16OS-16OS-SW - (DRIVE LINE - RM #12 TO TOP LH BULKHEAD)	1
8	57499 - (KIT)	HOSE ASSY - 797TC70 16-16OS-16OS-SW - (DRIVE LINE - RM #10 TO BOTTOM LH BULKHEAD)	1
9	54316	ELBOW, BULKHEAD UNION 45DEG #16	2
10	60344	PLATE, TRUNK - BH (TL)	1
11	11707	BOLT - .375” X 1” **263 RED LOCTITE™**	2
12	15528	WASHER, SAE FLAT - .375”	2
17	15228	ELBOW, 90 - FF1868T-1616S	2
18	58359	CONNECTOR,FLANGE PAD-W48-16-16U-M12 BLK	2
19	(CALL)	BOLT, M12-1.75 X 45MM L 10MM HEX DRIVE **(TORQUE 85FT LBS) 263 RED LOCTITE™)**	8
21	53157	FITTING, CONNECTOR - #4 ORF - 14MM	1
22	54795	CONNECTOR, STR ORIFICED .04” TRACK MOTOR	1
23	52900	SWIVEL, NUT BRANCH TEE #6	1
24	15117	CONNECTOR, STR - FF1852T-0808S	1
25	53651	FITTING, FLUSHING ORIFICE - TRACK MOTOR	1
26	52439	CONNECTOR, MALE ISO 6149	1
27	53124	FITTING, MALE CONNECTOR ISO 6149	1
28	17688	ELBOW, 90 - FF1868T-1212S	2
29	15225	CONNECTOR, STR - FF1852T-1616S	4
30	16296	ELBOW, 90 - FF1868T-0606S	1
31	15133	ELBOW, 90 - FF1868T-0406S	1
32	57499 - (KIT)	HOSE ASSY - 797TC49 16-16OS-16O9-SW - (DRIVE LINE - BULKHEAD TO LEFT HAND DRIVE MOTOR TOP PORT)	1
33	57499 - (KIT)	HOSE ASSY - 797TC58 16-16OS-16O9-SW - (DRIVE LINE - BULKHEAD TO LEFT HAND DRIVE MOTOR BOTTOM PORT)	1
34	57499 - (KIT)	HOSE ASSY - 387TC84 04-04OS-04O9-W - (SHIFT - BULKHEAD TO LEFT DRIVE MOTOR)	1
35	57499 - (KIT)	HOSE ASSY - 187TC95 08-08OS-08O9-W - (FLUSH - BULKHEAD TO LEFT DRIVE MOTOR)	1
36	57499 - (KIT)	HOSE ASSY - 387TC91 06-06OS-06OS-W - (BRAKE - BULKHEAD TO LEFT DRIVE MOTOR)	1
37	57499 - (KIT)	HOSE ASSY - 387TC12 06-06OS-06O4 - (BRAKE JUMPER - LEFT DRIVE MOTOR TO FINAL DRIVE)	1
38	57499 - (KIT)	HOSE ASSY - 187TC78 08-08OS-08O9-W - (CASE DRAIN - BULKHEAD TO LEFT DRIVE MOTOR)	1

P100-00020 - U/C HYD. HOSE U, 11_2 CARBODY, LVL - 48L C/B - 755 LH

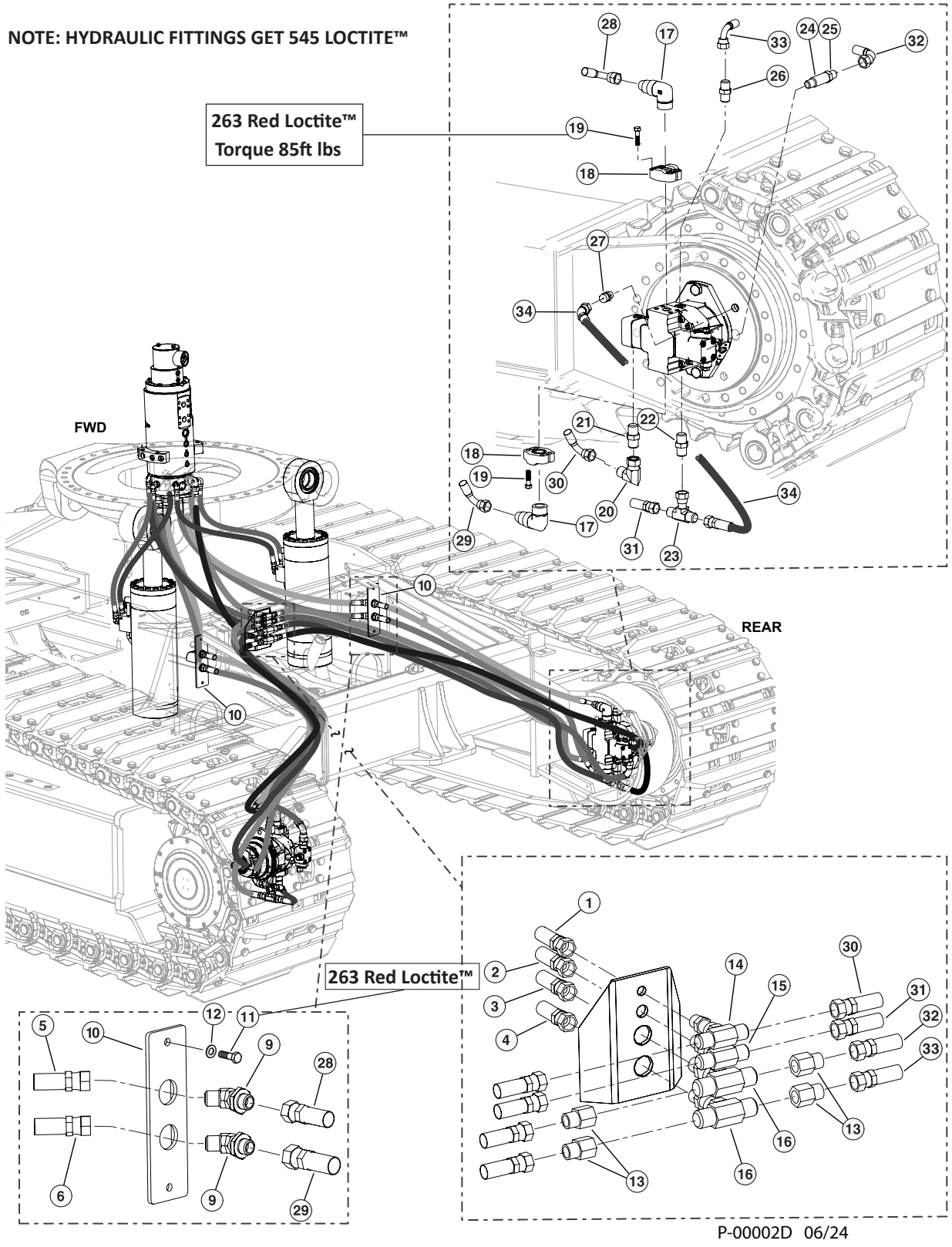

P-00002D 06/24

P100-00020 - U/C HYD. HOSE U, 11_2 CARBODY, LVL - 48L C/B - 755 LH

Item	Part #	Description	Qty.
	57458	**KIT, FITTING - TRACK TRUNK**	1
	57457	**KIT, FITTING - TRACK LEVELING**	1
1	57499	HOSE ASSY - 387TC51 04-04OS-04OS-W - (SHIFT - RM #3 TO BULKHEAD)	1
2	57499	HOSE ASSY - 387TC61 06-06OS-06OS-W - (BRAKE - RM #1 TO BULKHEAD)	1
3	57499	HOSE ASSY - 187TC61 12-12OS-12OS-W - (FLUSH - RM #7 TO BULKHEAD)	1
4	57499	HOSE ASSY - 187TC61 12-12OS-12OS-W - (SHIFT - RM V2 TO BULKHEAD)	1
5	57499	HOSE ASSY - 797TC70 16-16OS-16OS-SW - (DRIVE LINE - RM #11 TO TOP RH BULKHEAD)	1
6	57499	HOSE ASSY - 797TC70 16-16OS-16OS-SW - (DRIVE LINE - RM #9 TO BOTTOM RH BULKHEAD)	1
9	54316	ELBOW, BULKHEAD UNION 45DEG #16	1
10	60344	PLATE, TRUNK - BH (TL)	2
11	11707	BOLT - .375” X 1” **263 RED LOCTITE™**	1
12	15528	WASHER, SAE FLAT - .375”	2
13	18581	CONNECTOR, REDUCER - ORS FF2281T-0812S	2
14	52901	TEE, BULKHEAD BRANCH - 4	4
15	52902	TEE, BULKHEAD BRANCH - 6	1
16	53192	FITTING, BULKHEAD BRANCH TEE- 12 WJLO-WL	1
17	15228	ELBOW, 90 - FF1868T-1616S	2
18	58359	CONNECTOR,FLANGE PAD-W48-16-16U-M12 BLK	2
19	(CALL)	BOLT, M12-1.75 X 45MM L 10MM HEX DRIVE **(TORQUE 85FT LBS) 263 RED LOCTITE™)**	2
20	15145	ELBOW, 90 SWIVEL - FF2098T-0404S	8
21	53157	FITTING, CONNECTOR - #4 ORF - 14MM	1
22	54795	CONNECTOR, STR ORIFICED .04” TRACK MOTOR	1
23	52900	SWIVEL, NUT BRANCH TEE #6	1
24	53651	FITTING, FLUSHING ORIFICE - TRACK MOTOR	1
25	15117	CONNECTOR, STR - FF1852T-0808S	1
26	52439	CONNECTOR, MALE ISO 6149	1
27	53124	FITTING, MALE CONNECTOR ISO 6149	1
28	57499 - (KIT)	HOSE ASSY - 797TC49 16-16OS-16O9-SW - (DRIVE LINE - BULKHEAD TO RIGHT HAND DRIVE MOTOR TOP PORT)	1
29	57499 - (KIT)	HOSE ASSY - 797TC58 16-16OS-16O9-SW - (DRIVE LINE - BULKHEAD TO RIGHT HAND DRIVE MOTOR BOTTOM PORT)	1
30	57499 - (KIT)	HOSE ASSY - 387TC84 04-04OS-04O9-W - (SHIFT - BULKHEAD TO RIGHT DRIVE MOTOR)	1
31	57499 - (KIT)	HOSE ASSY - 387TC91 06-06OS-06OS-W - (BRAKE - BULKHEAD TO RIGHT DRIVE MOTOR)	1
32	57499 - (KIT)	HOSE ASSY - 187TC95 08-08OS-08O9-W - (FLUSH - BULKHEAD TO RIGHT DRIVE MOTOR)	1
33	57499 - (KIT)	HOSE ASSY - 187TC78 08-08OS-08O9-W - (CASE DRAIN - BULKHEAD TO RIGHT DRIVE MOTOR)	1
24	57499 - (KIT)	HOSE ASSY - 387TC20 06-06OS-06O4 - (BRAKE JUMPER - RIGHT DRIVE MOTOR TO FINAL DRIVE)	1

P100-00030 - U/C HYD. HOSE U, 11_2 CARBODY, LVL - 48L C/B - 755 - LEVELING HOSES

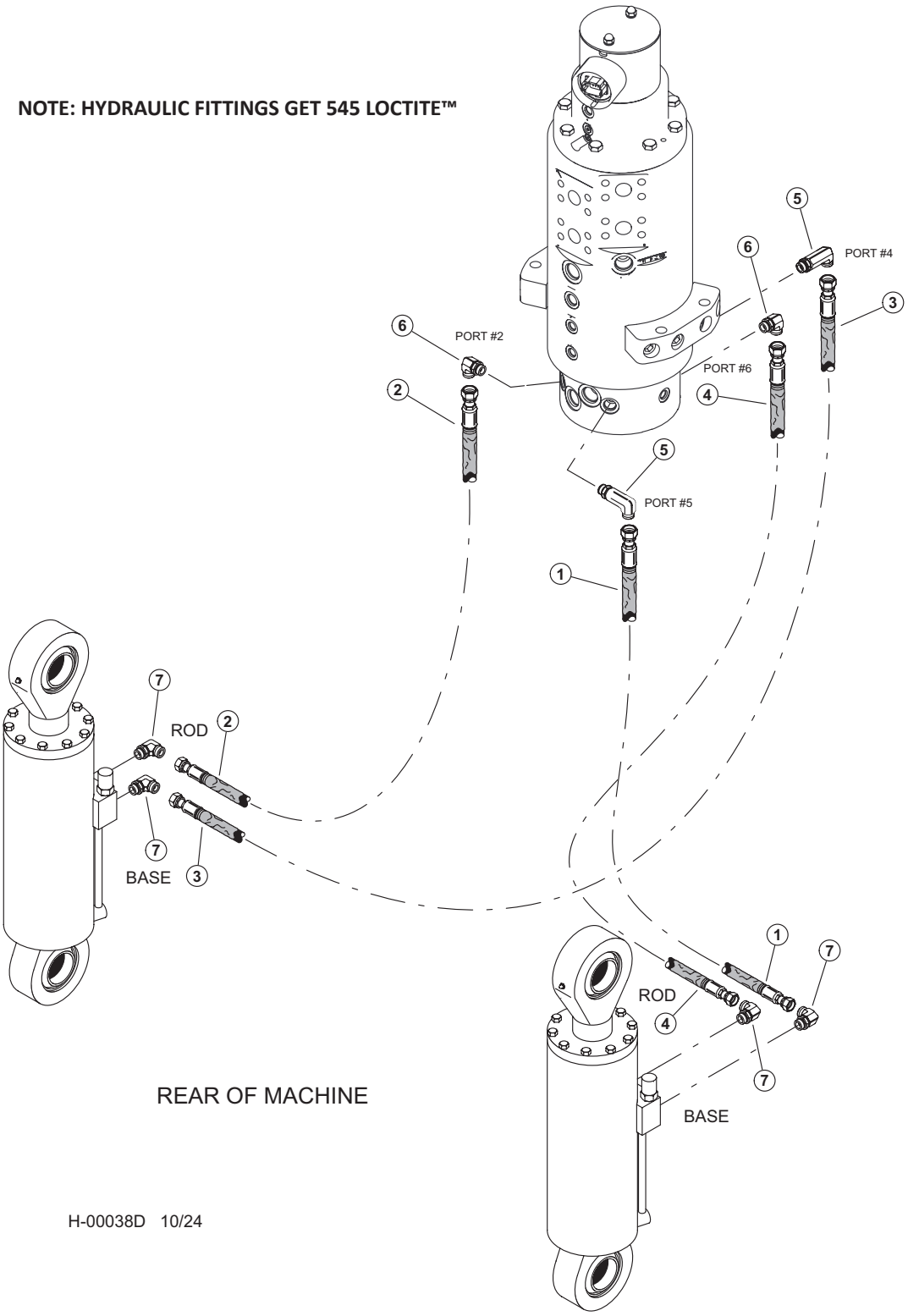

P100-00030 - U/C HYD. HOSE U, 11_2 CARBODY, LVL - 48L C/B - 755 - LEVELING HOSES

Item	Part #	Description	Qty.
	57457	**KIT, FITTING - TRACK LEVELING**	1
	57947	**KIT, FITTING - TRACK LEVELING**	1
1	57499 - (KIT)	HOSE ASSY - 787TC54 08-08OS-080S - (RM #5 TO RH CYLINDER BASE)	1
2	57499 - (KIT)	HOSE ASSY - 787TC42 08-08OS-080S - (RM #2 TO LH CYLINDER ROD)	1
3	57499 - (KIT)	HOSE ASSY - 787TC54 08-08OS-080S - (RM #4 TO LH CYLINDER BASE)	1
4	57499 - (KIT)	HOSE ASSY - 787TC43 08-08OS-080S - (RM #6 TO RH CYLINDER ROD)	1
5	57445	FITTING, 8 CC5OLO-S	2
6	16360	ELBOW, 90 - FF1868T-0808S	1
7	15154	ELBOW, 90 - FF1868T-0810S	4

P100-00040 - U/C HYD. HOSE U, 11_2 CARBODY, LVL - 48L C/B - 755 - CARBODY FUEL SYSTEM HOSES

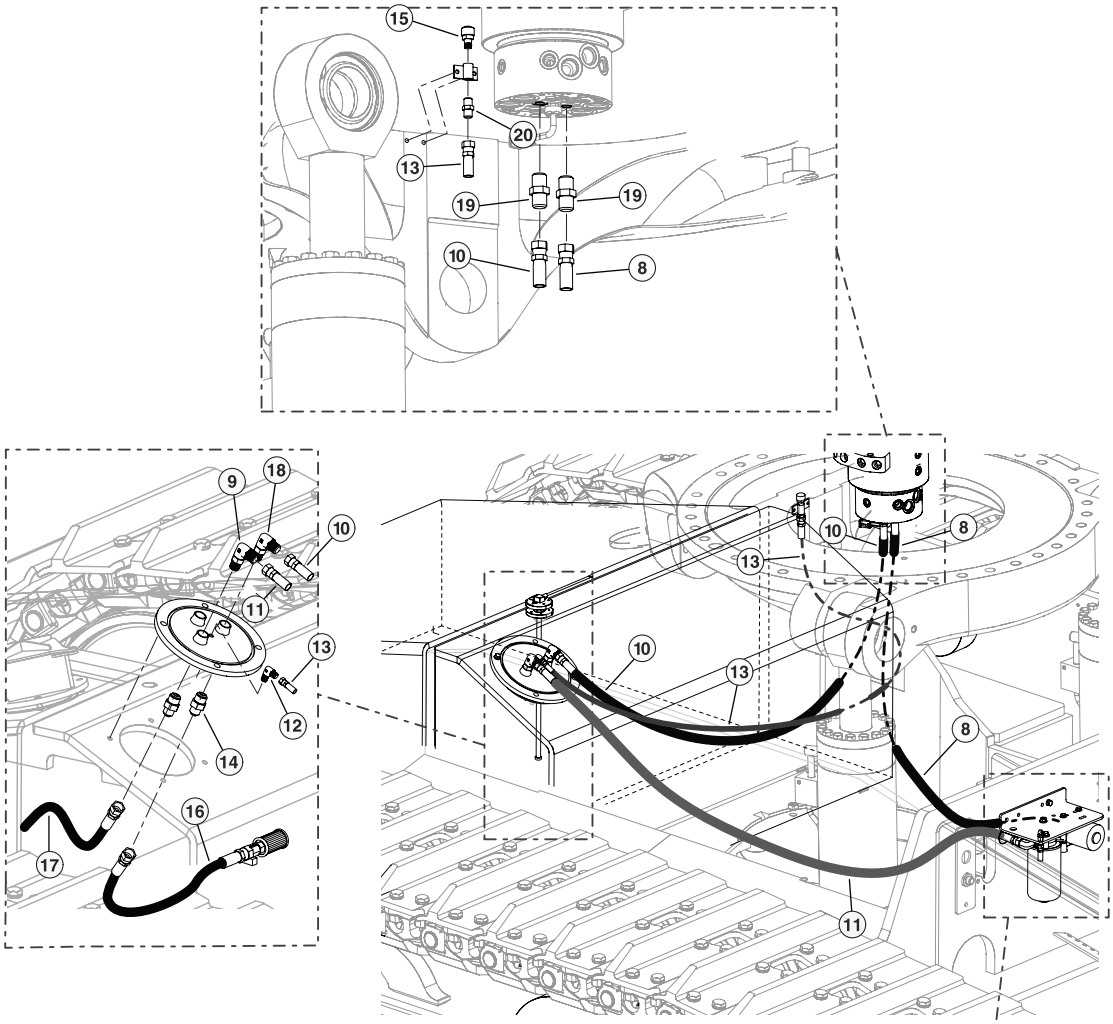

NOTE: HYDRAULIC FITTINGS GET 545 LOCTITE™

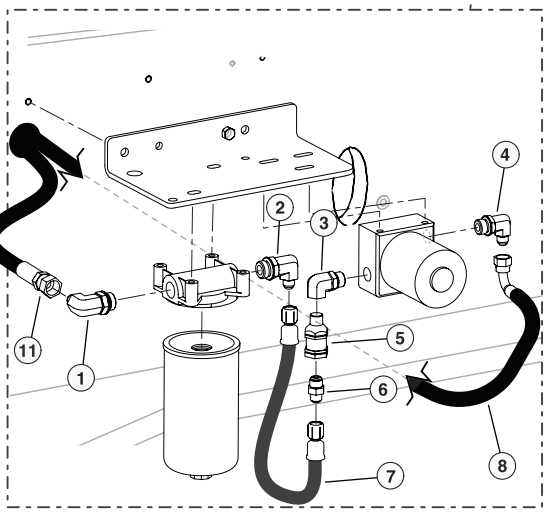

H-00042D 04/24

P100-00040 - U/C HYD. HOSE U, 11_2 CARBODY, LVL - 48L C/B - 755 - CARBODY FUEL SYSTEM HOSES

Item	Part #	Description	Qty.
	57457	**KIT, FITTING - TRACK LEVELING**	1
1	18109	ELBOW, 90 - 6801-8-10	1
2	53073	ELBOW, 90 6-JIC X 10-ORB)	1
3	57824	FITTING, ELBOW FEMALE - RAPTOR FUEL PUMP	1
4	15480	ELBOW, 90 - 6801-6	1
5	15652	VALVE, CHECK - HYDRAULIC/FUEL	1
6	16009	FITTING, 6 FTX-S PIPE-JIC	1
7	58064	HOSE, FUEL RAPTOR PUMP TRACK	1
8	57499 - (KIT)	HOSE ASSY - 221FR74 06-06JS-06JS-W - (FUEL PUMP OUT TO ROTARY MANIFOLD “FS” PORT)	1
9	15481	ELBOW, 90 - 6801-8	1
10	57499 - (KIT)	HOSE ASSY - 221FR78 06-06JS-06JS-W - (ROTARY MANIFOLD “FR” PORT TO FUEL TANK RETURN)	1
11	57499 - (KIT)	HOSE ASSY - 221FR74 08-08JS-08JS-W - (FUEL SUPPLY TO FUEL FILTER IN)	1
12	15505	ELBOW, 90 4-4 CLO-S	1
13	57499 - (KIT)	HOSE ASSY - 387TC75 04-04OS-04OS-W - (FUEL VENT)	1
14	15117	CONNECTOR, STR - FF1852T-0808S	2
15	54170	VENT, FUEL TANK - TRACK	1
16	57499 - (KIT)	HOSE ASSY - 187TC42 08-08OS-08MP - (FUEL PICK UP - IN TANK)	1
17	57499 - (KIT)	HOSE ASSY - 187TC20 08-08OS-OPEN - (FUEL RETURN - IN TANK)	1
18	53145	FITTING, 6-8 C50X-S - JIC	1
19	53887	FITTING, FUEL - ROTARY MANIFOLD #6 JIC	2
20	15131	CONNECTOR, STR - FF2031T-0404S	1

P100-00050 - U/C HYD. HOSE U, 11_2 CARBODY, LVL - 48L C/B - 755 - LEVELING SYSTEM GREASE HOSES

NOTE: HYDRAULIC FITTINGS GET 545 LOCTITE™

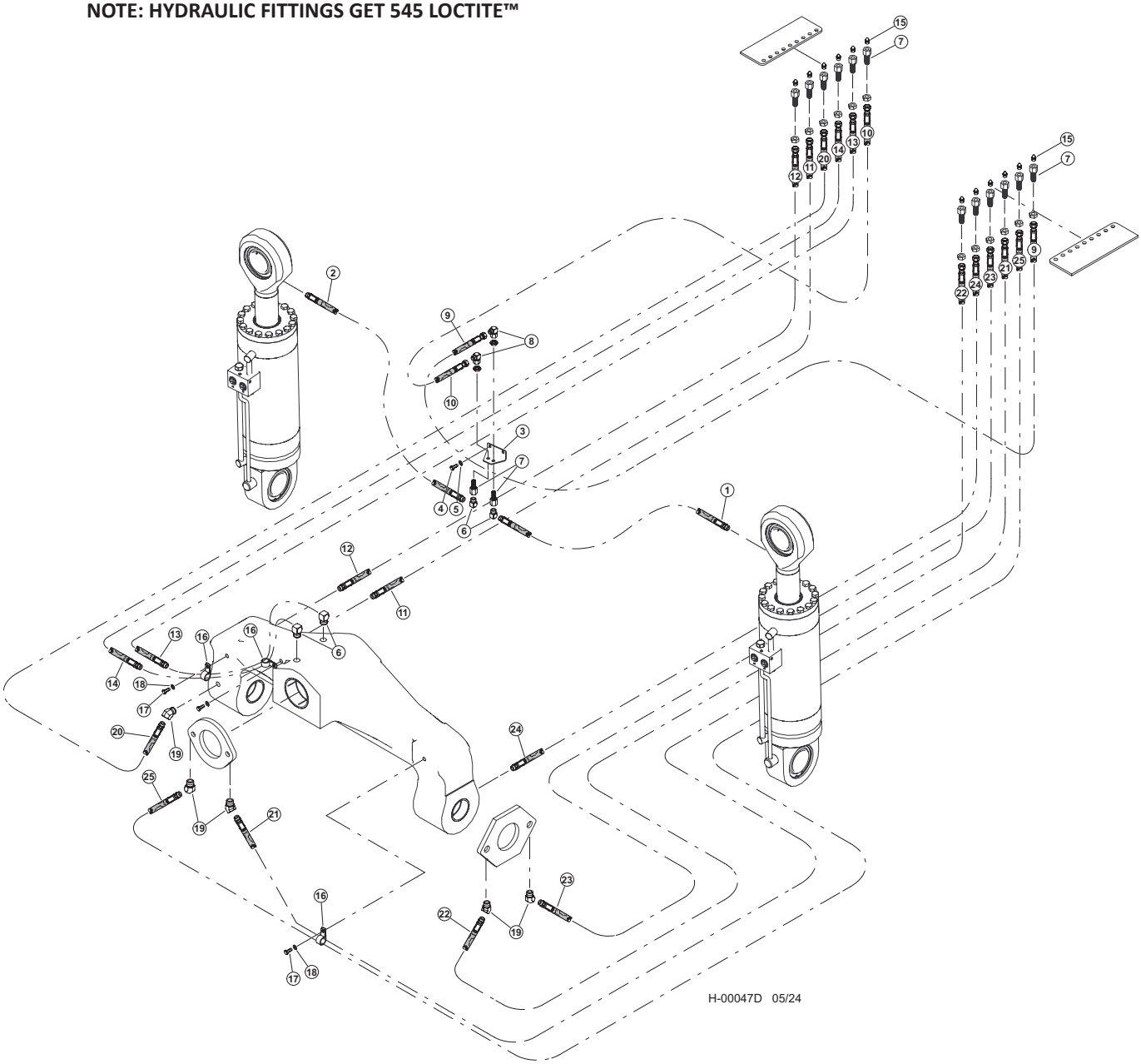

P100-00050 - U/C HYD. HOSE U, 11_2 CARBODY, LVL - 48L C/B - 755 - LEVELING SYSTEM GREASE HOSES

Item	Part #	Description	Qty.
	57457	KIT, FITTING - TRACK LEVELING	1
1	57499 - (KIT)	HOSE ASSY - HLB22 02-02SP-02SP-W - (LH LEVEL CYLINDER ROD)	1
2	57499 - (KIT)	HOSE ASSY - HLB22 02-02SP-02SP-W - (RH LEVEL CYLINDER ROD)	1
3	47308	BRACKET, GREASE LINE - LEVELING	1
4	15576	BOLT - .25” X 1”	2
5	10800	WASHER, FLAT - .25”	2
6	22281	ELBOW, 1/8-27 NPTF(M), 1/8-17 NPTF(F),90	4
7	15658	CONNECTOR, STR BULKHEAD - 2239-2-4S	14
8	17023	ELBOW, 90 SWIVEL - 6500-4	2
9	57499 - (KIT)	HOSE ASSY - HLB112 02-04JS-04JS-W - (LH LEVEL CYLINDER BULKHEAD TO BULKHEAD)	1
10	57499 - (KIT)	HOSE ASSY - HLB112 02-04JS-04JS-W - (RH LEVEL CYLINDER BULKHEAD TO BULKHEAD)	1
11	57499 - (KIT)	HOSE ASSY - HLB84 02-02PS-04JS-W125 - (BULKHEAD TO LEVELER - RH REAR INNER)	1
12	57499 - (KIT)	HOSE ASSY - HLB85 02-02PS-04JS - (BULKHEAD TO LEVELER - RH REAR OUTER)	1
13	57499 - (KIT)	HOSE ASSY - HLB132 02-02PS-04JS-W100 - (BULKHEAD TO LEVELER - TOP REAR)	1
14	57499 - (KIT)	HOSE ASSY - HLB136 02-02PS-04JS - (BULKHEAD TO LEVELER - TOP FRONT)	1
15	10704	FITTING, GREASE - .125 NPT - STR	12
16	17536	CLAMP, HOSE - COATED STRAP - .75”	3
17	15604	BOLT - .25” X .75”	3
18	10757	WASHER, SAE FLAT - .25”	3
19	21671	ELBOW, 45 - 5546134	4
20	57499 - (KIT)	HOSE ASSY - HLB89 02-02PS-04JS - (BULKHEAD TO LEVELER - RH FRONT)	1
21	57499 - (KIT)	HOSE ASSY - HLB131 02-02PS-04JS-W100 - (BULKHEAD TO FRONT LH SLACK ADJUSTER)	1
22	57499 - (KIT)	HOSE ASSY - HLB92 02-02PS-04JS - (BULKHEAD TO LH SIDE SLACK ADJUSTER FRONT)	1
23	57499 - (KIT)	HOSE ASSY - HLB85 02-02PS-04JS-W125 - (BULKHEAD TO LH SIDE SLACK ADJUSTER REAR)	1
24	57499 - (KIT)	HOSE ASSY - HLB99 02-02PS-04JS - (BULKHEAD TO LEVELER - LH REAR)	1
25	57499 - (KIT)	HOSE ASSY - HLB134 02-02PS-04JS - (BULKHEAD TO FRONT RH SLACK ADJUSTER)	1

P100-00060 - U/C HYD. HOSE U, 11_2 CARBODY, LVL - 48L C/B - 755-LEVELING CYL BASE & ROTARY MAN GREASE HOSES

NOTE: HYDRAULIC FITTINGS GET 545 LOCTITE™

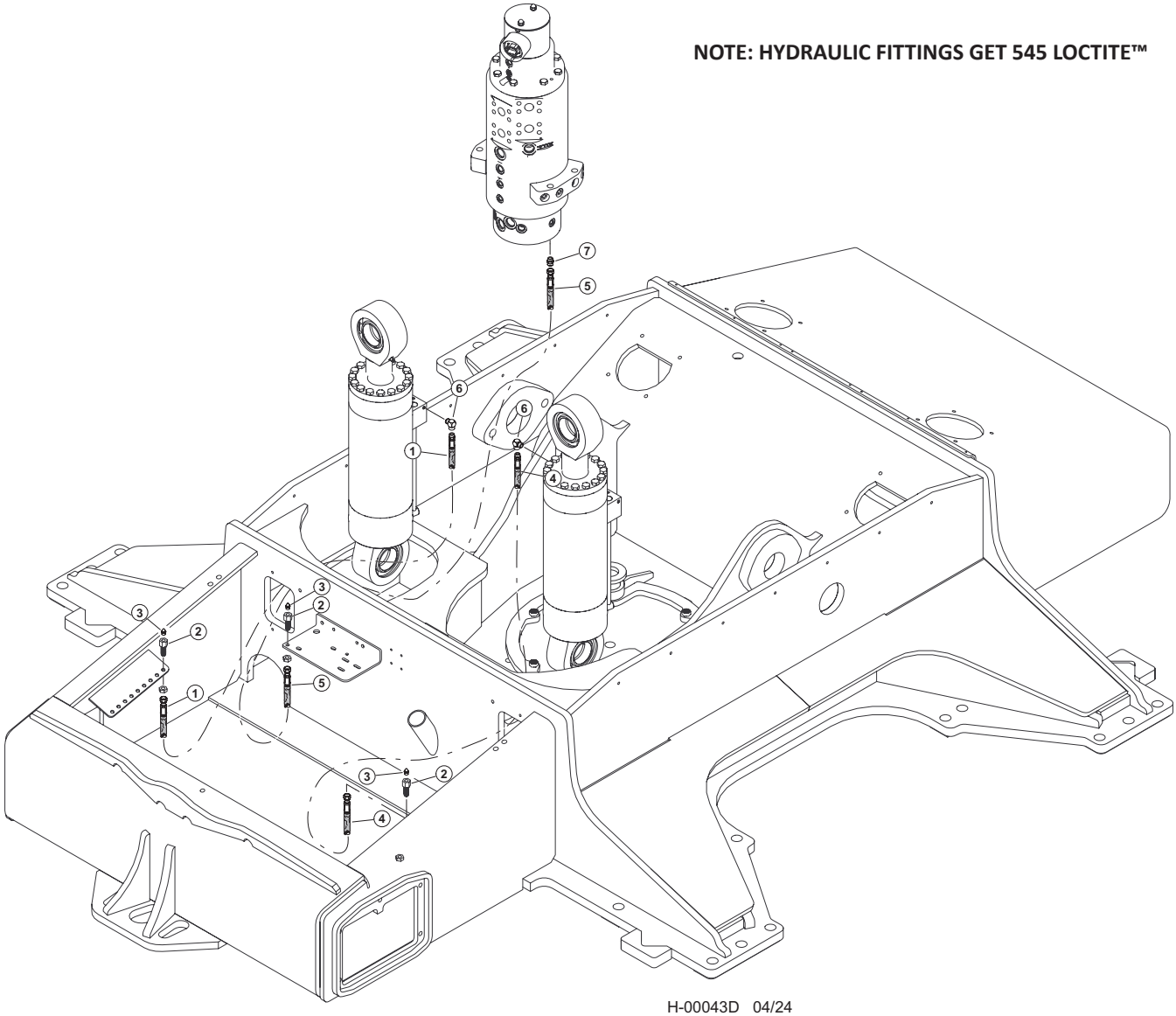

H-00043D 04/24

P100-00060 - U/C HYD. HOSE U, 11_2 CARBODY, LVL - 48L C/B - 755-LEVELING CYL BASE & ROTARY MAN GREASE HOSES

Item	Part #	Description	Qty.
	57457	**KIT, FITTING - TRACK LEVELING**	1
1	57499 - (KIT)	HOSE ASSY - HLB72 02-02PS-04JS-W - (LEVEL - LEFT CYLINDER BASE)	1
2	15658	CONNECTOR, STR BULKHEAD - 2239-2-4S	2
3	10704	FITTING, GREASE - .125 NPT - STR	2
4	57499 - (KIT)	HOSE ASSY - HLB72 02-02PS-04JS-W - (LEVEL - RIGHT CYLINDER BASE)	1
5	57499 - (KIT)	HOSE ASSY - HLB81 02-04JS-04JS-W - (ROTARY MANIFOLD GREASE)	1
6	22281	ELBOW, 1/8-27 NPTF(M), 1/8-17 NPTF(F),90	2
7	51887	CONNECTOR, STR - (4F50X-S)	1

P100-00070 - U/C HYD. HOSE U, 11_0 CARBODY, NL - 48L C/B - 755 - TRACK DRIVE HOSES

NOTE: HYDRAULIC FITTINGS GET 545 LOCTITE™

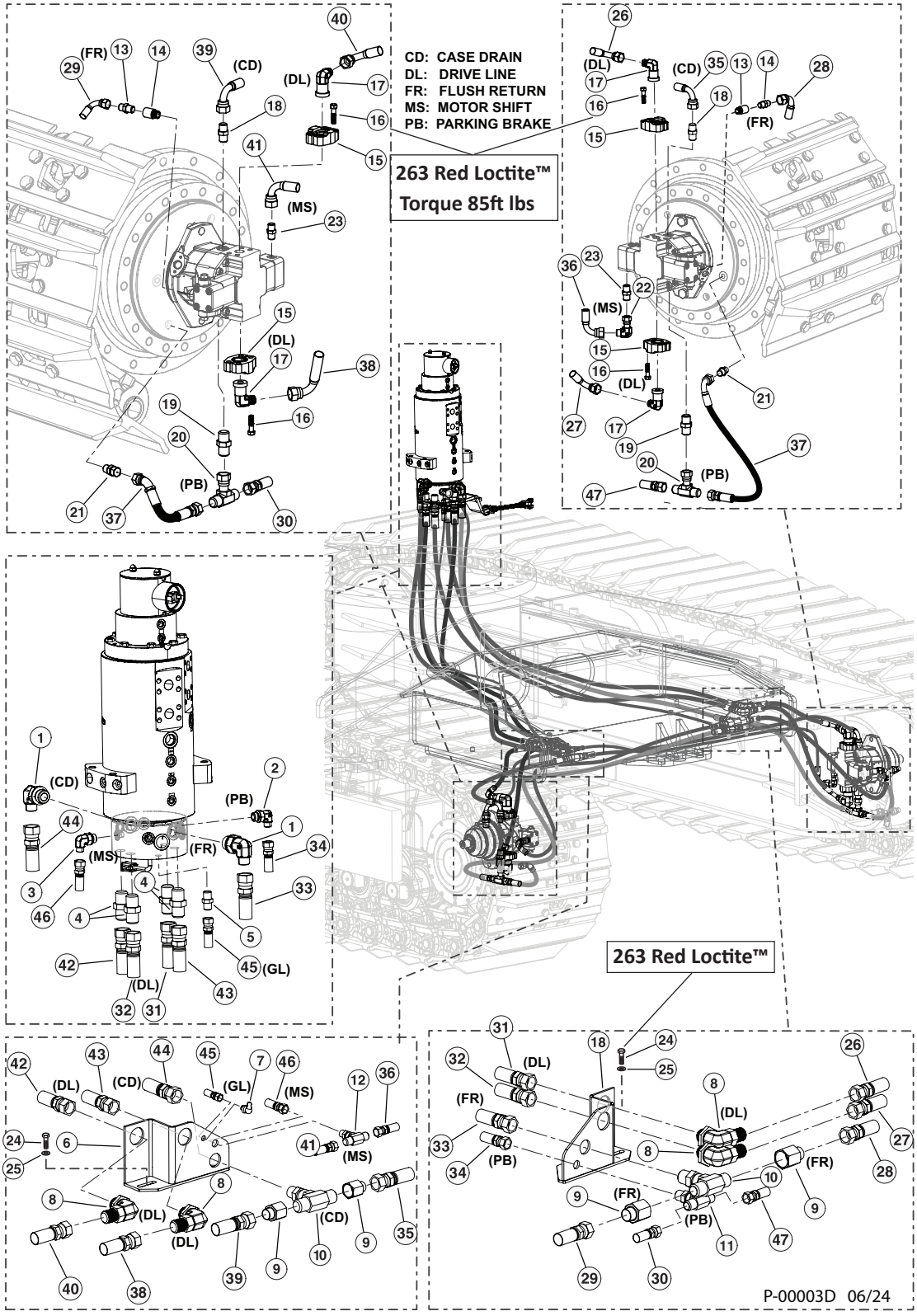

P100-00070 - U/C HYD. HOSE U, 11_0 CARBODY, NL - 48L C/B - 755 - TRACK DRIVE HOSES

Item	Part #	Description	Qty.
	57458	**KIT, FITTING - TRACK TRUNK**	1
	57968	**KIT, FITTING - ROTARY MANIFOLD TRACK NL**	1
	57456	**KIT, FITTING - TRACK NL CARBODY**	1
1	17688	ELBOW, 90 - FF1868T-1212S	2
2	15133	ELBOW, 90 - FF1868T-0406S	1
3	16296	ELBOW, 90 - FF1868T-0606S	1
4	15225	CONNECTOR, STR - FF1852T-1616S	4
5	51887	CONNECTOR, STR - (4F50X-S)	1
6	53762	BULKHEAD, TRACK HOSE L.H.	1
7	15684	FITTING, GREASE - .125 NPT - 90	1
8	53680	FITTING, BULKHEAD UNION ELBOW 16 WELO-WN	4
9	18581	CONNECTOR, REDUCER - ORS FF2281T-0812S	4
10	53192	FITTING, BULKHEAD BRANCH TEE- 12 WJLO-WL	2
11	52902	TEE, BULKHEAD BRANCH - 6	1
12	52901	TEE, BULKHEAD BRANCH - 4	1
13	15117	CONNECTOR, STR - FF1852T-0808S	2
14	53651	FITTING, FLUSHING ORIFICE - TRACK MOTOR	2
15	58359	CONNECTOR,FLANGE PAD-W48-16-16U-M12 BLK	4
16	(CALL)	BOLT, M12-1.75 X 45MM L 10MM HEX DRIVE	16
17	15228	ELBOW, 90 - FF1868T-1616S	4
18	52439	CONNECTOR, MALE ISO 6149	1
19	54795	CONNECTOR, STR ORIFICED .04” TRACK MOTOR	2
20	52900	SWIVEL, NUT BRANCH TEE #6	2
21	53124	FITTING, MALE CONNECTOR ISO 6149	2
22	15145	ELBOW, 90 SWIVEL - FF2098T-0404S	2
23	53157	FITTING, CONNECTOR - #4 ORF - 14MM	2
24	11707	BOLT - .375” X 1”	4
25	15228	ELBOW, 90 - FF1868T-1616S	4
26	57430 - (KIT)	HOSE ASSY - 797TC35.5 16-16OS-16O9-SW - (BULKHEAD TO RH DRIVE MOTOR - TOP)	1
27	57430 - (KIT)	HOSE ASSY - 797TC42.5 16-16OS-16O9-SW - (BULKHEAD TO RH DRIVE MOTOR - BOTTOM)	1
28	57430 - (KIT)	HOSE ASSY - 797TC60 08-08OS-08O9-W - (FLUSH - BULKHEAD TEE TO RH DRIVE MOTOR)	1
29	57430 - (KIT)	HOSE ASSY - 797TC72 08-08OS-08O9-W - (FLUSH - BULKHEAD TEE TO LH DRIVE MOTOR)	1
30	57430 - (KIT)	HOSE ASSY - 797TC66 06-06OS-08O6-W - (BRAKE - BULKHEAD TEE TO LH DRIVE MOTOR)	1
31	57430 - (KIT)	HOSE ASSY - 797TC83 16-016OS-16OS-SW - (DRIVE LINE - ROTARY MANIFOLD #10 TO LH OUTSIDE BULKHEAD)	1
32	57430 - (KIT)	HOSE ASSY - 797TC84 16-016OS-16O4-SW - (DRIVE LINE - ROTARY MANIFOLD #11 TO RH INSIDE BULKHEAD)	1
33	57430 - (KIT)	HOSE ASSY - 797TC90 12-12OS-12OS-W - (FLUSH - ROTARY MANIFOLD #7 TO BULKHEAD TEE)	1
34	57430 - (KIT)	HOSE ASSY - 797TC91 06-06OS-06OS-W - (BRAKE - ROTARY MANIFOLD #1 TO BULKHEAD TEE)	1
35	57430 - (KIT)	HOSE ASSY - 797TC57 08-08OS-08O9-W - (CASE DRAIN - BULKHEAD TEE TO RH DRIVE MOTOR)	1
36	57430 - (KIT)	HOSE ASSY - 797TC60 04-04OS-04O9-W - (SHIFT - BULKHEAD TEE TO RH DRIVE MOTOR)	1
37	57430 - (KIT)	HOSE ASSY - 387TC22 06-06OS-06O4 - (BRAKE JUMPER - DRIVE MOTOR TO FINAL DRIVE) BOTTOM LH TRACK MOTOR)	1
38	57430 - (KIT)	HOSE ASSY - 797TC32 16-16OS-16O9-SW - (DRIVE LINE - LEFT INSIDE BULKHEAD TO LEFT DRIVE MOTOR)	1

P100-00070 - U/C HYD. HOSE U, 11_0 CARBODY, NL - 48L C/B - 755 - TRACK DRIVE HOSES

NOTE: HYDRAULIC FITTINGS GET 545 LOCTITE™

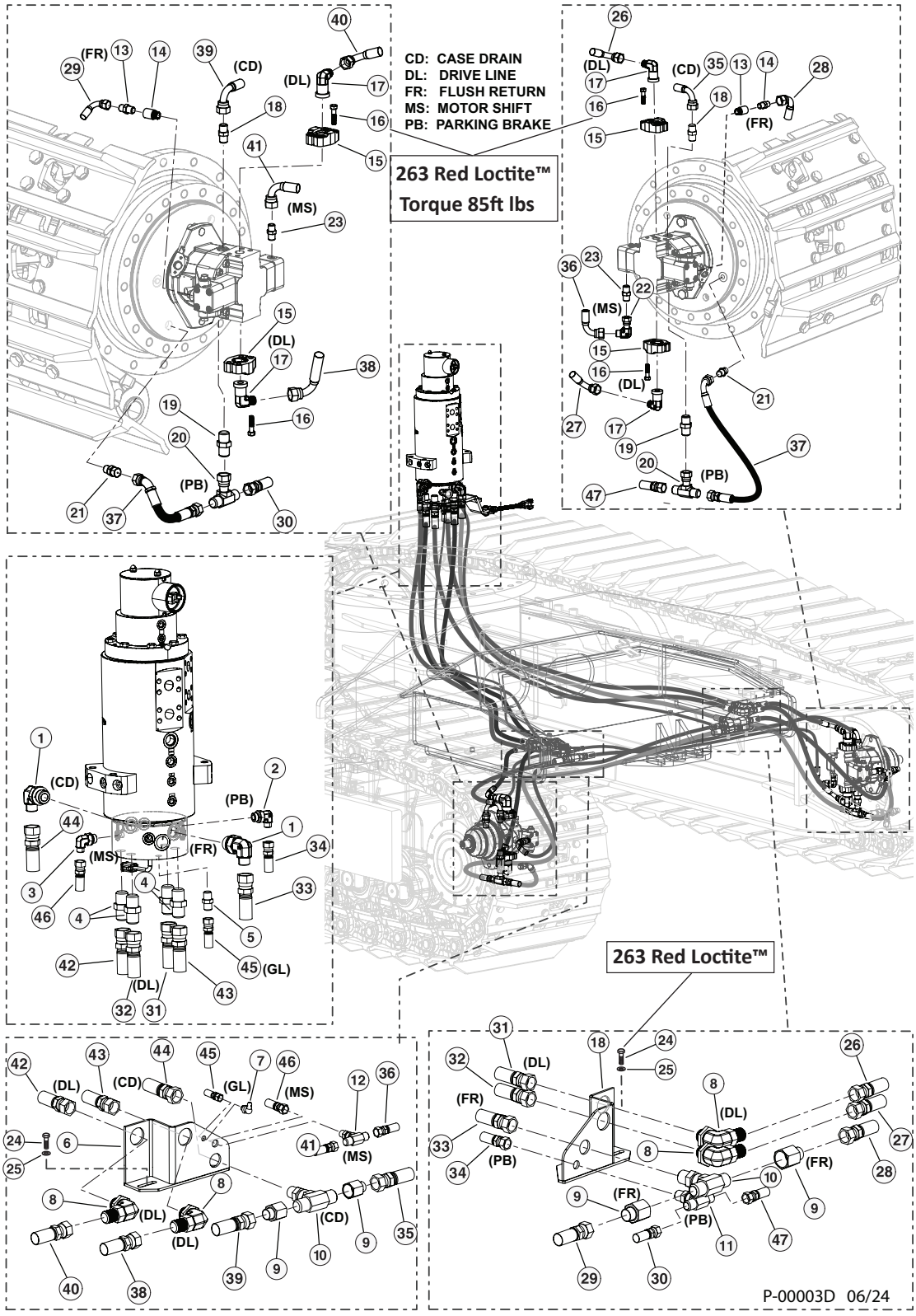

P100-00070 - U/C HYD. HOSE U, 11_0 CARBODY, NL - 48L C/B - 755 - TRACK DRIVE HOSES

Item	Part #	Description	Qty.
39	57430 - (KIT)	HOSE ASSY - 187TC45 08-08OS-08O9-W - (CASE DRAIN - BULKHEAD TO LH TRACK MOTOR)	1
40	57430 - (KIT)	HOSE ASSY - 797TC25 16-16OS-16O9-SW - (DRIVE LINE - LH OUTSIDE BULKHEAD TEE TO TOP LH TRACK MOTOR)	1
41	57430 - (KIT)	HOSE ASSY - 387TC42 04-04OS-04OS-W - (SHIFT - LH TRACK MOTOR TO LH BULKHEAD TEE)	1
42	57430 - (KIT)	HOSE ASSY - 797TC83 16-16OS-16O4-SW - (DRIVE LINE - ROTARY MANIFOLD #10 TO LH BULKHEAD, OUTSIDE)	1
43	57430 - (KIT)	HOSE ASSY - 797TC87 16-16OS-16OS-SW - (DRIVE LINE - ROTARY MANIFOLD 12 TO LH BULKHEAD, INSIDE)	1
44	57430 - (KIT)	HOSE ASSY - 187TC100 12-12OS-12OS-W - (CASE DRAIN - ROTARY MANIFOLD V1 TO LH BULKHEAD)	1
45	57430 - (KIT)	HOSE ASSY - 387TC84 04-04JS-04JS-W - (GREASE LINE - LH BULKHEAD TO ROTARY MANIFOLD)	1
46	57430 - (KIT)	HOSE ASSY - 387TC91 04-04OS-04OS-W - (SHIFT - LH BULKHEAD TEE TO ROTARY MANIFOLD #3)	1
47	57430 - (KIT)	HOSE ASSY - 387TC56 06-06OS-06OS-W - (BRAKE - RH DRIVE MOTOR TEE TO RH BULKHEAD TEE)	1

P100-00080 - U/C HYD. HOSE U, 11_0 CARBODY, NL - 48L C/B - 755 - FUEL HOSES

NOTE: HYDRAULIC FITTINGS GET 545 LOCTITE™

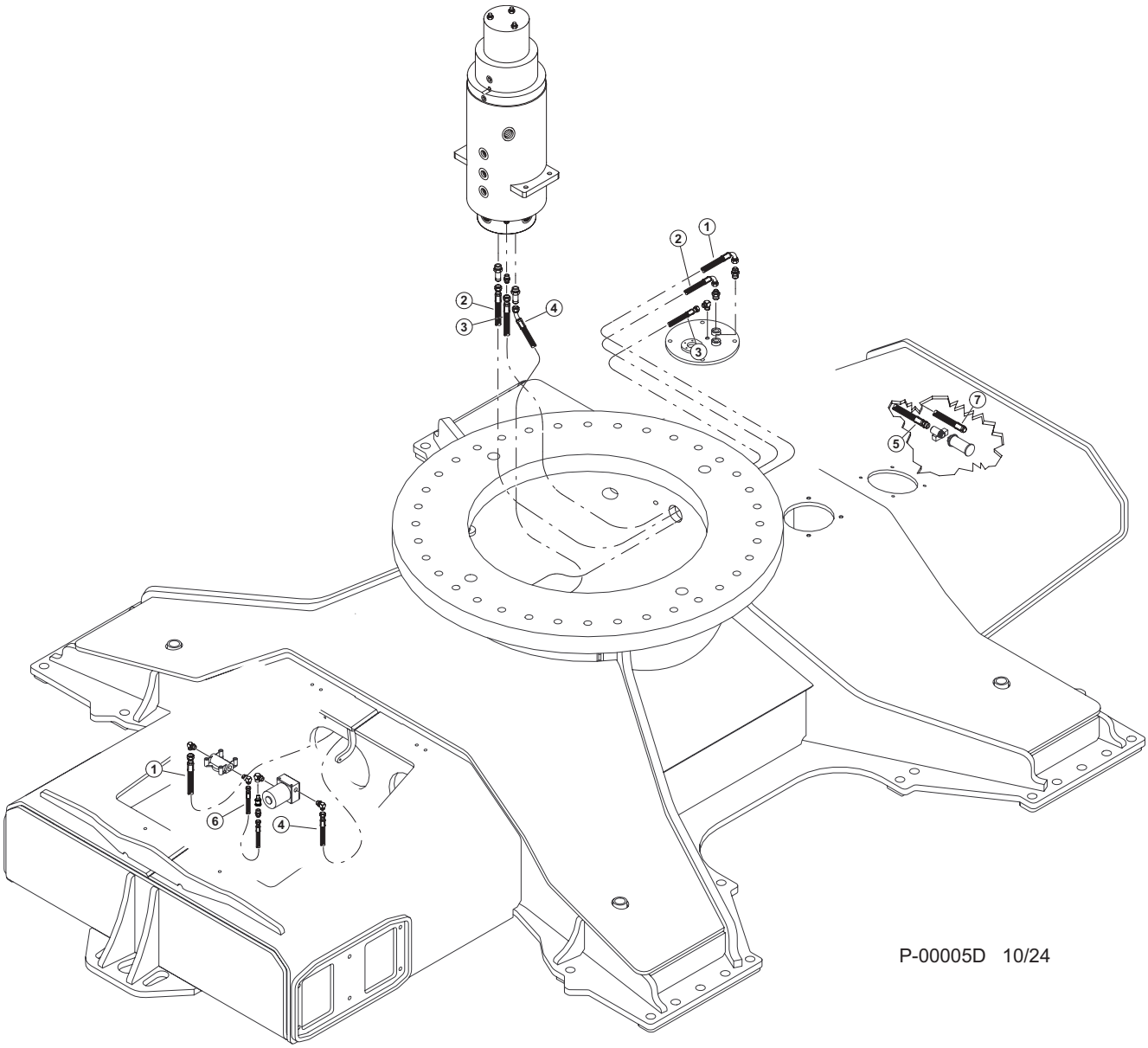

P100-00080 - U/C HYD. HOSE U, 11_0 CARBODY, NL - 48L C/B - 755 - FUEL HOSES

Item	Part #	Description	Qty.
1	57430 - (KIT)	HOSE ASSY - 221FR92 08-08JS-08J9-W - (FUEL TANK SUPPLY TO FUEL FILTER) PORT “FR” TO FUEL TANK)	1
2	57430 - (KIT)	HOSE ASSY - 221FR45 06-06JS-06J9-W - (FUEL RETURN - ROTARY MANIFOLD	1
3	57430 - (KIT)	HOSE ASSY - 387TC45 04-04OS-04OS-W - (FUEL VENT - FUEL TANK TO ROTARY MANIFOLD PORT “FS”)	1
4	57430 - (KIT)	HOSE ASSY - 221FR69 06-06JS-04J4-W - (FUEL PUMP TO ROTARY MANIFOLD)	1
5	57430 - (KIT)	HOSE ASSY - 1887TC28 08-08MP-08OS - (FUEL SUPPLY IN TANK)	1
6	57430 - (KIT)	HOSE ASSY - 387TC16 06-06JS-06JS-W - (FUEL HOSE JUMPER)	1
7	57430 - (KIT)	HOSE ASSY - 187TC15 08-08OS-08OPEN - (FUEL RETURN IN TANK)	1

P100-00090 - U/C HYD. HOSE U, 11_2 CARBODY, LVL - 51L C/B - 755 - TRACK DRIVE HOSES

NOTE: HYDRAULIC FITTINGS GET 545 LOCTITE™

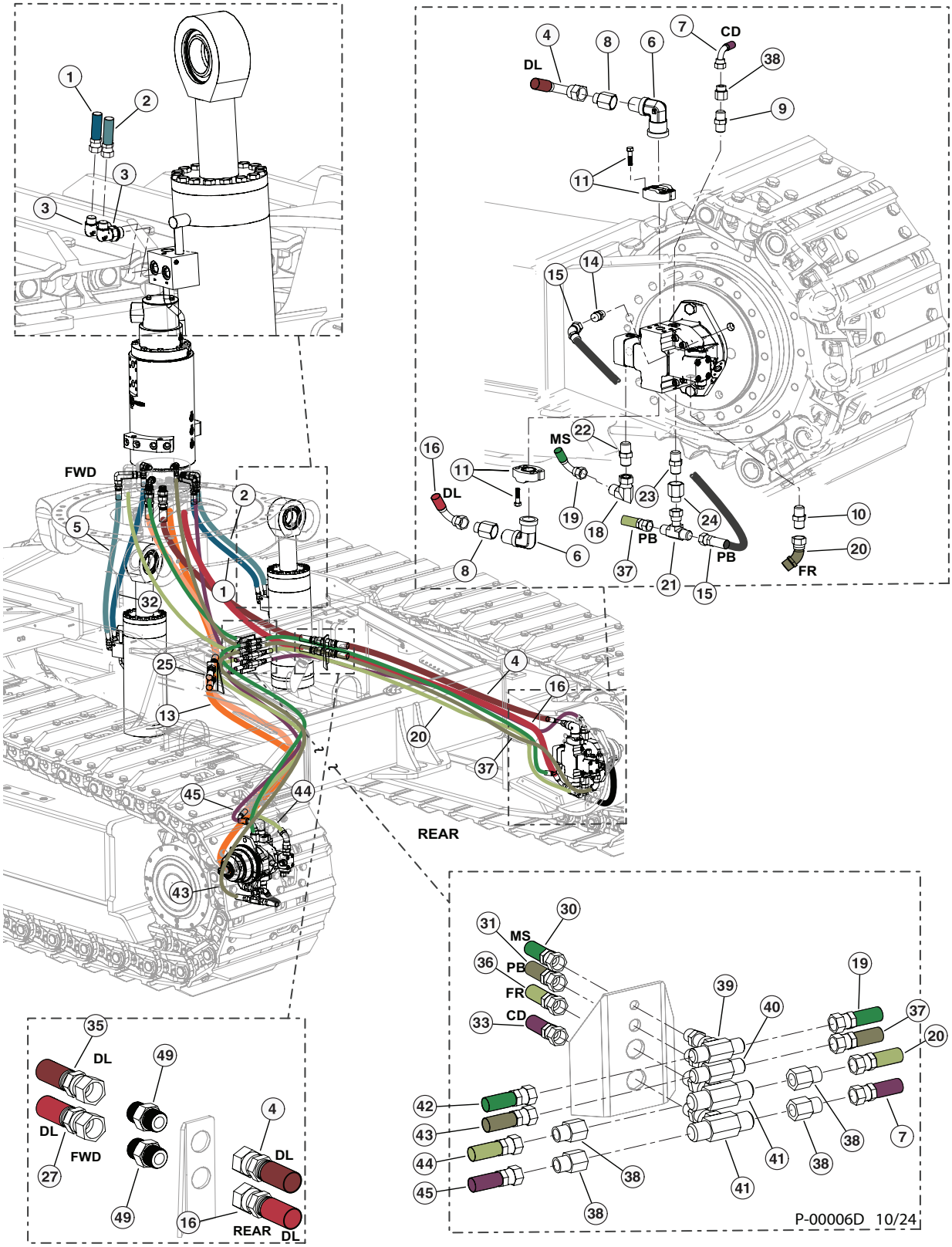

P100-00090 - U/C HYD. HOSE U, 11_2 CARBODY, LVL - 51L C/B - 755 - TRACK DRIVE HOSES

Item	Part #	Description	Qty.
	58122 - (KIT)	**KIT, HOSE 755 WEST COAST LOWER**	1
1	666700	HOSE, HYD, 787TC43 08-08OS-08OS-W - (RM12 TO RIGHT LEVEL CYL BASE)	1
2	666690	HOSE, HYD, 787TC42 08-08OS-08OS-W - (RM6 TO RIGHT LEVEL CYL ROD)	1
3	15154	CYLINDER, ELBOW, 90 - FF1868T-0810S	4
4	666620	HOSE, HYD, 797TC63 16-16OS-16O9-SW- (BULKHEAD - DRIVE MOTOR - TOP RH)	1
5	666690	HOSE, HYD, 787TC42 08-08OS-08OS-W - (RM2 TO LEFT LEVEL CYL ROD)	1
6	15103	DRIVE LINE, ADAPTER, 90 FLANGE - FF5540-1616S	4
7	666570	HOSE, HYD, 187TC92-08-08OS-08O9-W - (BULKHEAD - MOTOR CASE - RH)	1
8	20455	DRIVE LINE, CONNECTOR, REDUCER - ORS FF2281T-1620S	4
9	52439	CASE DRAIN, CONNECTOR, MALE ISO 6149	2
10	57504	FLUSH RETURN, FITTING, METRIC 8M22F87OMLOS	2
11	15113	DRIVE LINE, KIT, SPLIT FLANGE - 1” (CODE 62) **(TORQUE 85FT LBS) 263 RED LOCTITE™)**	4
*	62748	BOLT - m14-2.0x45 mm	16
*	18418	WASHER, FLAT - 14MM	16
*	15378	O-RING - 1.25” SF (CODE 61/62)	4
12	666610	HOSE, HYD, 387TC12 06-06OS-06O4 - (PARK BRAKE JUMPER - LH)	1
13	666630	HOSE, HYD, 797TC72 16-16OS-16O9-SW - (BULKHEAD - DRIVE MOTOR BOTTOM - LH)	1
14	53124	PARKING BRAKE, FITTING, MALE CONNECTOR ISO 6149	2
15	666610	HOSE, HYD, 387TC12 06-06OS-06O4 - (PARK BRAKE JUMPER - RH)	1
16	666630	HOSE, HYD, 797TC72 16-16OS-16O9-SW - (BULKHEAD - DRIVE MOTOR BOTTOM - RH)	1
17	16296	PARKING BRAKE, ELBOW, 90 - FF1868T-0606S	1
18	15145	MOTOR SHIFT, ELBOW, 90 SWIVEL - FF2098T-0404S	1
19	666580	HOSE, HYD, 387TC98 04-04OS-04O9-W - (BULKHEAD - MOTOR SHIFT - RH)	1
20	666560	HOSE, HYD, 187TC109-08-08OS-08O4-W - (BULKHEAD - MOTOR FLUSH - RH)	1
21	52900	PARKING BRAKE, SWIVEL, NUT BRANCH TEE #6	2
22	53157	MOTOR SHIFT, FITTING, CONNECTOR - #4 ORF - 14MM	2
23	54795	PARKING BRAKE, CONNECTOR, STR ORIFICED .04” TRACK MOTOR	2
24	57485	PARKING BRAKE FITTING, 8-6 TRLON	2
25	666620	HOSE, HYD, 797TC63 16-16OS-16O9-SW- (BULKHEAD - DRIVE MOTOR - TOP LH)	1
26	666670	HOSE, HYD, 797TC70 16-16OS-16OS-SW - (RM10 - BH BOTTOM - LH BULKHEAD)	1
27	666670	HOSE, HYD, 797TC70 16-16OS-16OS-SW - (RM9 - BH BOTTOM - RH BULKHEAD)	1
28	15225	DRIVE LINE, CONNECTOR, STR - FF1852T-1616S	8
29	16360	CYLINDER, ELBOW, 90 - FF1868T-0808S	2
30	666650	HOSE, HYD, 387TC51 04-04OS-04OS-W - (RM3 - BH SHIFT)	1
31	666660	HOSE, HYD, 387TC61 06-06OS-06OS-W - (RM1 - BH BRAKE)	1
32	666700	HOSE, HYD, 787TC43 08-08OS-08OS-W - (RM4 TO LEFT LEVEL CYL BASE)	1
33	666640	HOSE, HYD, 187TC61 12-12OS-12OS-W - (RM V2 - BH CASE)	1
34	666680	HOSE, HYD, 797TC72 16-16OS-16OS-SW - (RM12 - BH TOP LH BULKHEAD)	1
35	666670	HOSE, HYD, 797TC70 16-16OS-16OS-SW - (RM11 - BH TOP - RH BULKHEAD)	1
36	666640	HOSE, HYD, 187TC61 12-12OS-12OS-W - (RM7 - BH FLUSH)	1
37	666590	HOSE, HYD, 387TC105 06-06OS-06OS-W - (BULKHEAD - TRACK BRAKE - RH	1
38	18581	CONNECTOR, REDUCER - ORS FF2281T-0812S	2
39	52901	MOTOR SHIFT, TEE, BULKHEAD BRANCH - 4	1
40	52902	PARKING BRAKE, TEE, BULKHEAD BRANCH - 6	1
41	53192	FITTING, BULKHEAD BRANCH TEE- 12 WJLO-WL	2
42	666580	HOSE, HYD, 387TC98 04-04OS-04O9-W - (BULKHEAD - MOTOR SHIFT - LH)	1
43	666590	HOSE, HYD, 387TC105 06-06OS-06OS-W - (BULKHEAD - TRACK BRAKE - LH)	1
44	666560	HOSE, HYD, 187TC109-08-08OS-08O4-W - (BULKHEAD - MOTOR FLUSH - LH)	1
45	666570	HOSE, HYD, 187TC92-08-08OS-08O9-W - (BULKHEAD - MOTOR CASE - LH)	1
46	57445	CYLINDER, FITTING, 8 CC5OLO-S	2
47	15133	MOTOR SHIFT, ELBOW, 90 - FF1868T-0406S	1
48	17688	ELBOW, 90 - FF1868T-1212S	2
49	15351	CONNECTOR, STR BULKHEAD - 2041-16-16S	4

P100-00090 - U/C HYD. HOSE U, 11_2 CARBODY, LVL - 51L C/B - 755 - TRACK DRIVE HOSES

NOTE: HYDRAULIC FITTINGS GET 545 LOCTITE™

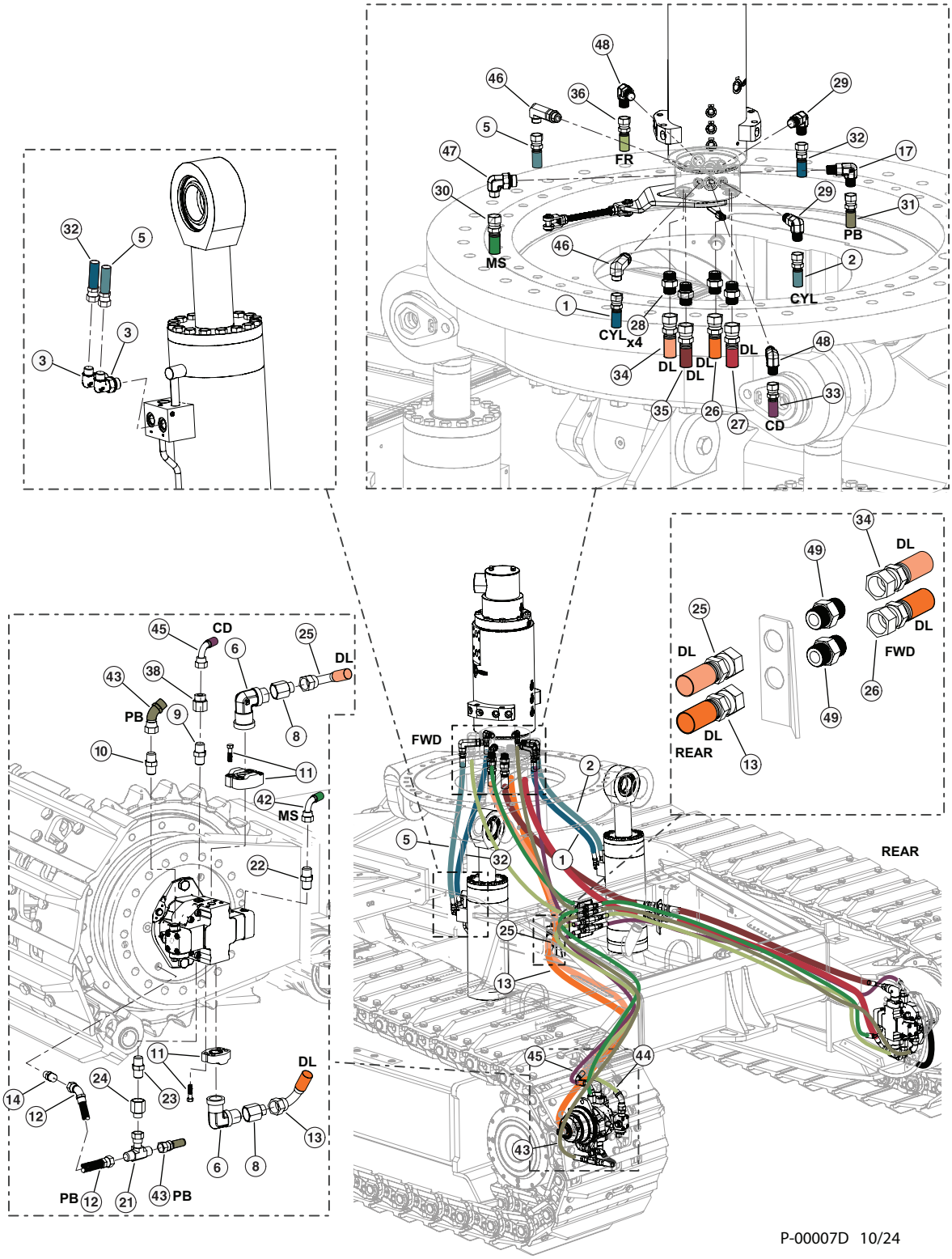

P100-00090 - U/C HYD. HOSE U, 11_2 CARBODY, LVL - 51L C/B - 755 - TRACK DRIVE HOSES

Item	Part #	Description	Qty.
	58122 - (KIT)	**KIT, HOSE 755 WEST COAST LOWER**	1
1	666700	HOSE, HYD, 787TC43 08-08OS-08OS-W - (RM12 TO RIGHT LEVEL CYL BASE)	1
2	666690	HOSE, HYD, 787TC42 08-08OS-08OS-W - (RM6 TO RIGHT LEVEL CYL ROD)	1
3	15154	CYLINDER, ELBOW, 90 - FF1868T-0810S	4
4	666620	HOSE, HYD, 797TC63 16-16OS-16O9-SW- (BULKHEAD - DRIVE MOTOR - TOP RH)	1
5	666690	HOSE, HYD, 787TC42 08-08OS-08OS-W - (RM2 TO LEFT LEVEL CYL ROD)	1
6	15103	DRIVE LINE, ADAPTER, 90 FLANGE - FF5540-1616S	4
7	666570	HOSE, HYD, 187TC92-08-08OS-08O9-W - (BULKHEAD - MOTOR CASE - RH)	1
8	20455	DRIVE LINE, CONNECTOR, REDUCER - ORS FF2281T-1620S	4
9	52439	CASE DRAIN, CONNECTOR, MALE ISO 6149	2
10	57504	FLUSH RETURN, FITTING, METRIC 8M22F87OMLOS	2
11	15113	DRIVE LINE, KIT, SPLIT FLANGE - 1” (CODE 62) **(TORQUE 85FT LBS) 263 RED LOCTITE™)**	4
*	62748	BOLT - m14-2.0x45 mm	16
*	18418	WASHER, FLAT - 14MM	16
*	15378	O-RING - 1.25” SF (CODE 61/62)	4
12	666610	HOSE, HYD, 387TC12 06-06OS-06O4 - (PARK BRAKE JUMPER - LH)	1
13	666630	HOSE, HYD, 797TC72 16-16OS-16O9-SW - (BULKHEAD - DRIVE MOTOR BOTTOM - LH)	1
14	53124	PARKING BRAKE, FITTING, MALE CONNECTOR ISO 6149	2
15	666610	HOSE, HYD, 387TC12 06-06OS-06O4 - (PARK BRAKE JUMPER - RH)	1
16	666630	HOSE, HYD, 797TC72 16-16OS-16O9-SW - (BULKHEAD - DRIVE MOTOR BOTTOM - RH)	1
17	16296	PARKING BRAKE, ELBOW, 90 - FF1868T-0606S	1
18	15145	MOTOR SHIFT, ELBOW, 90 SWIVEL - FF2098T-0404S	1
19	666580	HOSE, HYD, 387TC98 04-04OS-04O9-W - (BULKHEAD - MOTOR SHIFT - RH)	1
20	666560	HOSE, HYD, 187TC109-08-08OS-08O4-W - (BULKHEAD - MOTOR FLUSH - RH)	1
21	52900	PARKING BRAKE, SWIVEL, NUT BRANCH TEE #6	2
22	53157	MOTOR SHIFT, FITTING, CONNECTOR - #4 ORF - 14MM	2
23	54795	PARKING BRAKE, CONNECTOR, STR ORIFICED .04” TRACK MOTOR	2
24	57485	PARKING BRAKE FITTING, 8-6 TRLON	2
25	666620	HOSE, HYD, 797TC63 16-16OS-16O9-SW- (BULKHEAD - DRIVE MOTOR - TOP LH)	1
26	666670	HOSE, HYD, 797TC70 16-16OS-16OS-SW - (RM10 - BH BOTTOM - LH BULKHEAD)	1
27	666670	HOSE, HYD, 797TC70 16-16OS-16OS-SW - (RM9 - BH BOTTOM - RH BULKHEAD)	1
28	15225	DRIVE LINE, CONNECTOR, STR - FF1852T-1616S	8
29	16360	CYLINDER, ELBOW, 90 - FF1868T-0808S	2
30	666650	HOSE, HYD, 387TC51 04-04OS-04OS-W - (RM3 - BH SHIFT)	1
31	666660	HOSE, HYD, 387TC61 06-06OS-06OS-W - (RM1 - BH BRAKE)	1
32	666700	HOSE, HYD, 787TC43 08-08OS-08OS-W - (RM4 TO LEFT LEVEL CYL BASE)	1
33	666640	HOSE, HYD, 187TC61 12-12OS-12OS-W - (RM V2 - BH CASE)	1
34	666680	HOSE, HYD, 797TC72 16-16OS-16OS-SW - (RM12 - BH TOP LH BULKHEAD)	1
35	666670	HOSE, HYD, 797TC70 16-16OS-16OS-SW - (RM11 - BH TOP - RH BULKHEAD)	1
36	666640	HOSE, HYD, 187TC61 12-12OS-12OS-W - (RM7 - BH FLUSH)	1
37	666590	HOSE, HYD, 387TC105 06-06OS-06OS-W - (BULKHEAD - TRACK BRAKE - RH	1
38	18581	CONNECTOR, REDUCER - ORS FF2281T-0812S	2
39	52901	MOTOR SHIFT, TEE, BULKHEAD BRANCH - 4	1
40	52902	PARKING BRAKE, TEE, BULKHEAD BRANCH - 6	1
41	53192	FITTING, BULKHEAD BRANCH TEE- 12 WJLO-WL	2
42	666580	HOSE, HYD, 387TC98 04-04OS-04O9-W - (BULKHEAD - MOTOR SHIFT - LH)	1
43	666590	HOSE, HYD, 387TC105 06-06OS-06OS-W - (BULKHEAD - TRACK BRAKE - LH)	1
44	666560	HOSE, HYD, 187TC109-08-08OS-08O4-W - (BULKHEAD - MOTOR FLUSH - LH)	1
45	666570	HOSE, HYD, 187TC92-08-08OS-08O9-W - (BULKHEAD - MOTOR CASE - LH)	1
46	57445	CYLINDER, FITTING, 8 CC5OLO-S	2
47	15133	MOTOR SHIFT, ELBOW, 90 - FF1868T-0406S	1
48	17688	ELBOW, 90 - FF1868T-1212S	2
49	15351	CONNECTOR, STR BULKHEAD - 2041-16-16S	4

P100-00100 - U/C HYD. HOSE U, 11_2 CARBODY, LVL - 51L C/B - 755 - CARBODY FUEL HOSES

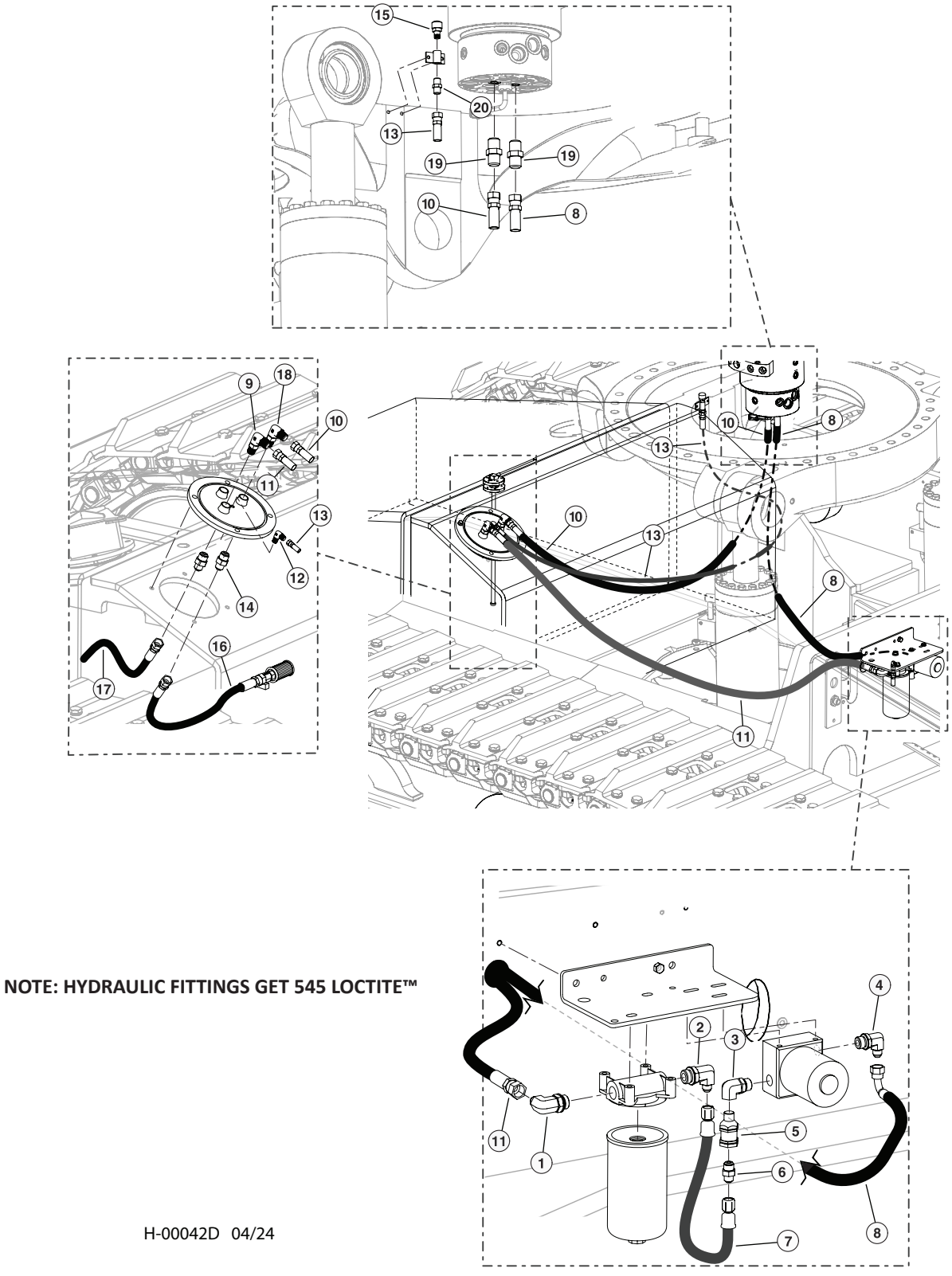

NOTE: HYDRAULIC FITTINGS GET 545 LOCTITE™

H-00042D 04/24

P100-00100 - U/C HYD. HOSE U, 11_2 CARBODY, LVL - 51L C/B - 755 - CARBODY FUEL HOSES

Item	Part #	Description	Qty.
	57457	**KIT, FITTING - TRACK LEVELING**	1
1	18109	ELBOW, 90 - 6801-8-10	1
2	53073	ELBOW, 90 6-JIC X 10-ORB)	1
3	57824	FITTING, ELBOW FEMALE - RAPTOR FUEL PUMP	1
4	15480	ELBOW, 90 - 6801-6	1
5	15652	VALVE, CHECK - HYDRAULIC/FUEL	1
6	16009	FITTING, 6 FTX-S PIPE-JIC	1
7	58064	HOSE, FUEL RAPTOR PUMP TRACK	1
8	666770 (58122 - KIT)	HOSE ASSY - 221FR74 06-06JS-06JS-W - (FUEL PUMP OUT TO ROTARY MANIFOLD “FS” PORT)	1
9	15481	ELBOW, 90 - 6801-8	1
10	666760 (58122 - KIT	HOSE ASSY - 221FR78 06-06JS-06JS-W - (ROTARY MANIFOLD “FR” PORT TO FUEL TANK RETURN)	1
11	666780 (58122 - KIT)	HOSE ASSY - 221FR74 08-08JS-08JS-W - (FUEL SUPPLY TO FUEL FILTER IN)	1
12	15505	ELBOW, 90 4-4 CLO-S	1
13	666750 (58122 - KIT)	HOSE ASSY - 387TC75 04-04OS-04OS-W - (FUEL VENT)	1
14	15117	CONNECTOR, STR - FF1852T-0808S	2
15	54170	VENT, FUEL TANK - TRACK	1
16	666740 (58122 - KIT)	HOSE ASSY - 187TC42 08-08OS-08MP - (FUEL PICK UP - IN TANK)	1
17	666730 (58122 - KIT)	HOSE ASSY - 187TC20 08-08OS-OPEN - (FUEL RETURN - IN TANK)	1
18	53145	FITTING, 6-8 C50X-S - JIC	1
19	53887	FITTING, FUEL - ROTARY MANIFOLD #6 JIC	2
20	15131	CONNECTOR, STR - FF2031T-0404S	1

P100-00110 - U/C HYD. HOSE U, 11_2 CARBODY, LVL - 51L C/B - 755 - LEVELING SYSTEM GREASE HOSES

NOTE: HYDRAULIC FITTINGS GET 545 LOCTITE™

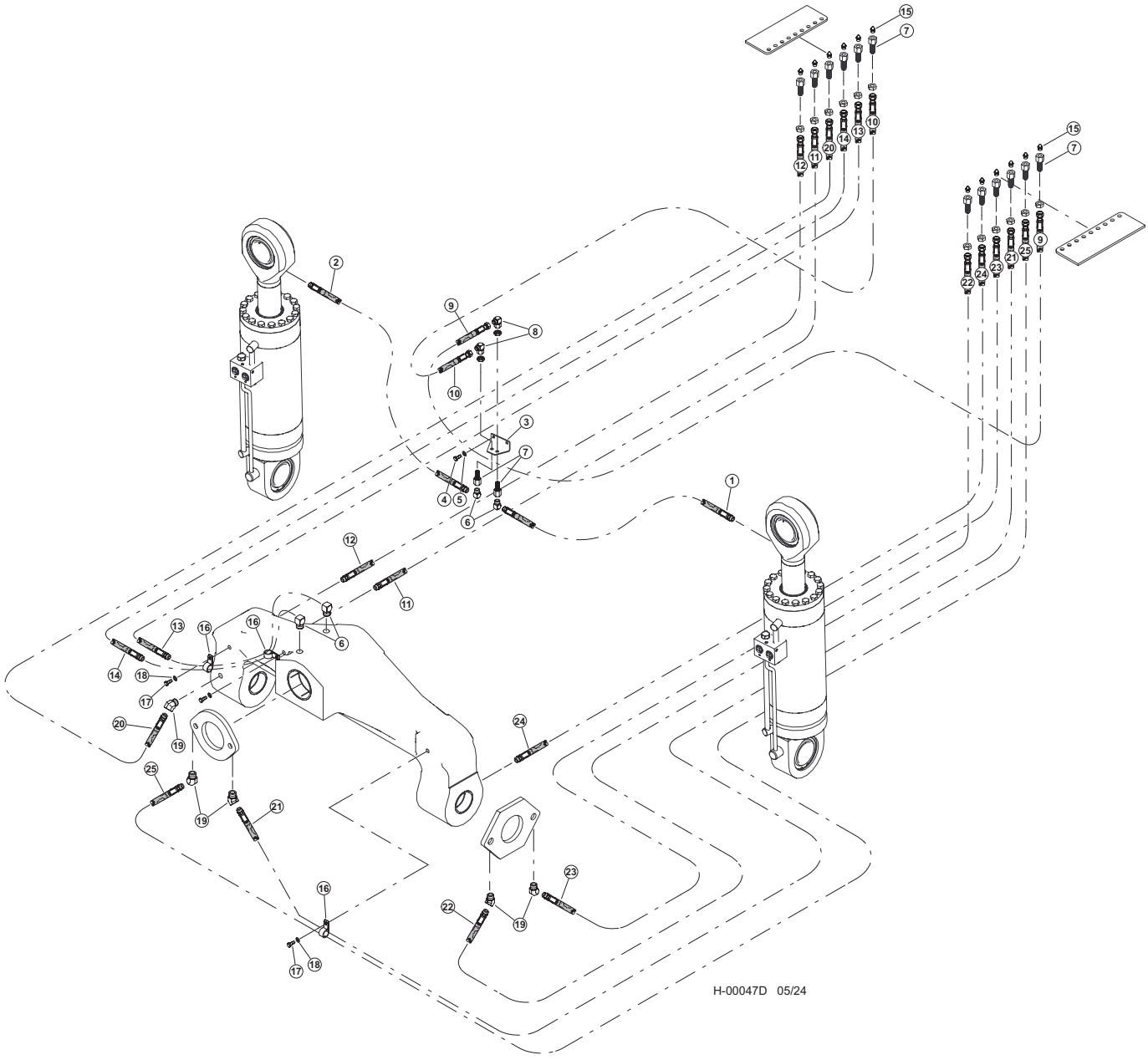

P100-00110 - U/C HYD. HOSE U, 11_2 CARBODY, LVL - 51L C/B - 755 - LEVELING SYSTEM GREASE HOSES

Item	Part #	Description	Qty.
	57457	**KIT, FITTING - TRACK LEVELING**	1
1	58122 - (KIT)	HOSE ASSY - HLB22 02-02SP-02SP-W - (LH LEVEL CYLINDER ROD)	1
2	58122 - (KIT)	HOSE ASSY - HLB22 02-02SP-02SP-W - (RH LEVEL CYLINDER ROD)	1
3	47308	BRACKET, GREASE LINE - LEVELING	1
4	15576	BOLT - .25” X 1”	2
5	10800	WASHER, FLAT - .25”	2
6	22281	ELBOW, 1/8-27 NPTF(M), 1/8-17 NPTF(F),90	4
7	15658	CONNECTOR, STR BULKHEAD - 2239-2-4S	14
8	17023	ELBOW, 90 SWIVEL - 6500-4	2
9	58122 - (KIT)	HOSE ASSY - HLB112 02-04JS-04JS-W - (LH LEVEL CYLINDER BULKHEAD TO BULKHEAD)	1
10	58122 - (KIT)	HOSE ASSY - HLB112 02-04JS-04JS-W - (RH LEVEL CYLINDER BULKHEAD TO BULKHEAD)	1
11	58122 - (KIT)	HOSE ASSY - HLB84 02-02PS-04JS-W125 - (BULKHEAD TO LEVELER - RH REAR INNER)	1
12	58122 - (KIT)	HOSE ASSY - HLB85 02-02PS-04JS - (BULKHEAD TO LEVELER - RH REAR OUTER)	1
13	58122 - (KIT)	HOSE ASSY - HLB132 02-02PS-04JS-W100 - (BULKHEAD TO LEVELER - TOP REAR)	1
14	58122 - (KIT)	HOSE ASSY - HLB136 02-02PS-04JS - (BULKHEAD TO LEVELER - TOP FRONT)	1
15	10704	FITTING, GREASE - .125 NPT - STR	12
16	17536	CLAMP, HOSE - COATED STRAP - .75”	3
17	15604	BOLT - .25” X .75”	3
18	10757	WASHER, SAE FLAT - .25”	3
19	21671	ELBOW, 45 - 5546134	4
20	58122 - (KIT)	HOSE ASSY - HLB99 02-02PS-04JS - (BULKHEAD TO LEVELER - RH FRONT)	1
21	58122 - (KIT)	HOSE ASSY - HLB131 02-02PS-04JS-W100 - (BULKHEAD TO FRONT LH SLACK ADJUSTER)	1
22	58122 - (KIT)	HOSE ASSY - HLB92 02-02PS-04JS - (BULKHEAD TO LH SIDE SLACK ADJUSTER FRONT)	1
23	58122 - (KIT)	HOSE ASSY - HLB85 02-02PS-04JS-W125 - (BULKHEAD TO LH SIDE SLACK ADJUSTER REAR)	1
24	58122 - (KIT)	HOSE ASSY - HLB89 02-02PS-04JS - (BULKHEAD TO LEVELER - LH REAR)	1
25	58122 - (KIT)	HOSE ASSY - HLB134 02-02PS-04JS - (BULKHEAD TO FRONT RH SLACK ADJUSTER)	1

P100-00120 - U/C HYD. HOSE U, 11_2 CARBODY, LVL - 51L C/B - 755-LEVELING CYL BASE & ROTARY MAN GREASE HOSES

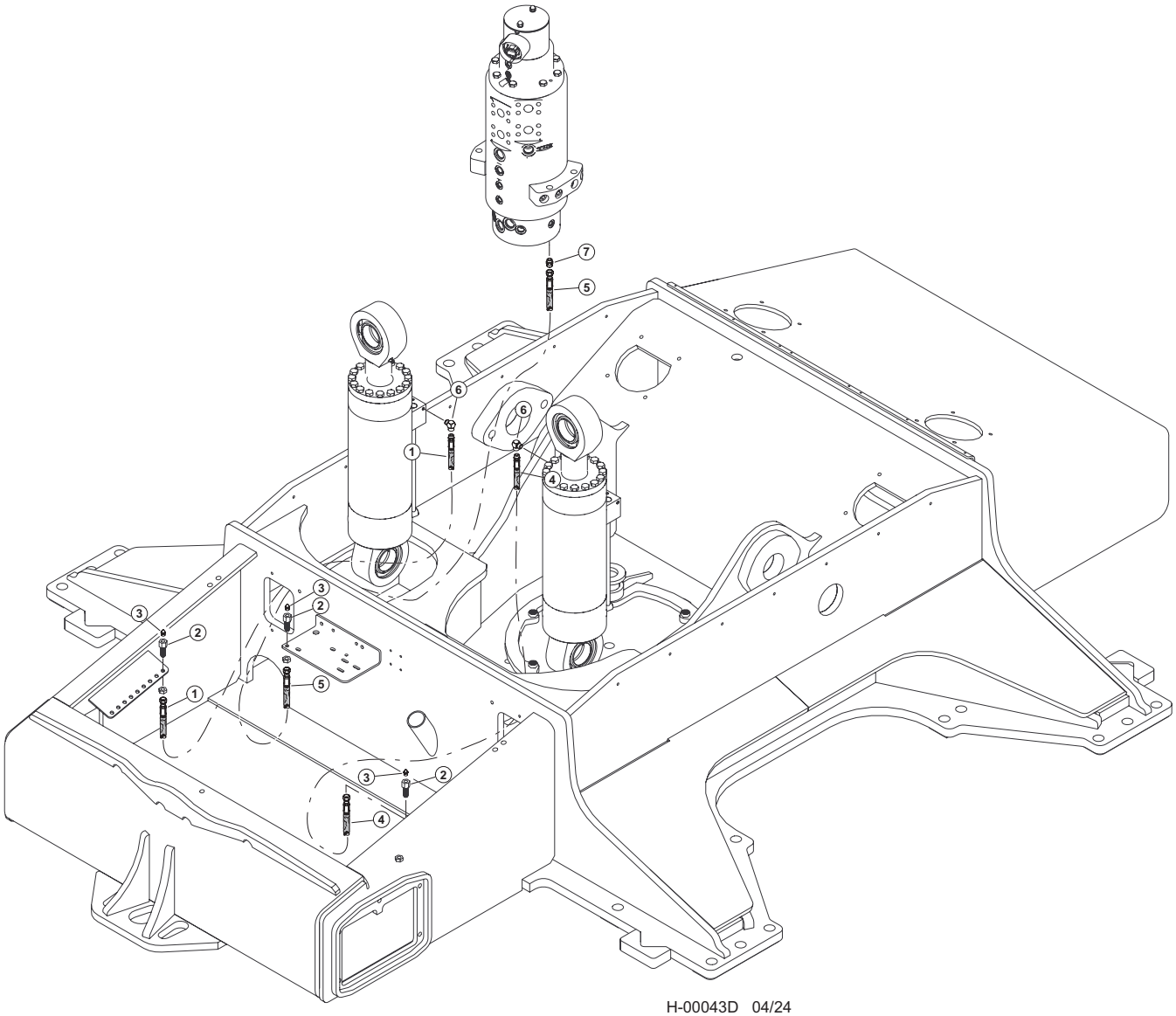

H-00043D 04/24

P100-00120 - U/C HYD. HOSE U, 11_2 CARBODY, LVL - 51L C/B - 755-LEVELING CYL BASE & ROTARY MAN GREASE HOSES

Item	Part #	Description	Qty.
	57457	**KIT, FITTING - TRACK LEVELING**	1
1	58122 - (KIT)	HOSE ASSY - HLB72 02-02PS-04JS-W - (LEVEL - LEFT CYLINDER BASE)	1
2	15658	CONNECTOR, STR BULKHEAD - 2239-2-4S	2
3	10704	FITTING, GREASE - .125 NPT - STR	2
4	58122 - (KIT)	HOSE ASSY - HLB72 02-02PS-04JS-W - (LEVEL - RIGHT CYLINDER BASE)	1
5	58122 - (KIT)	HOSE ASSY - HLB81 02-04JS-04JS-W - (ROTARY MANIFOLD GREASE)	1
6	22281	ELBOW, 1/8-27 NPTF(M), 1/8-17 NPTF(F),90	2
7	51887	CONNECTOR, STR - (4F50X-S)	1

UNDERCARRIAGE - (R)

R100-00050 - TRACK SLIDER - L.P. (11’0” CARBODY) - TL735D, TL-745D

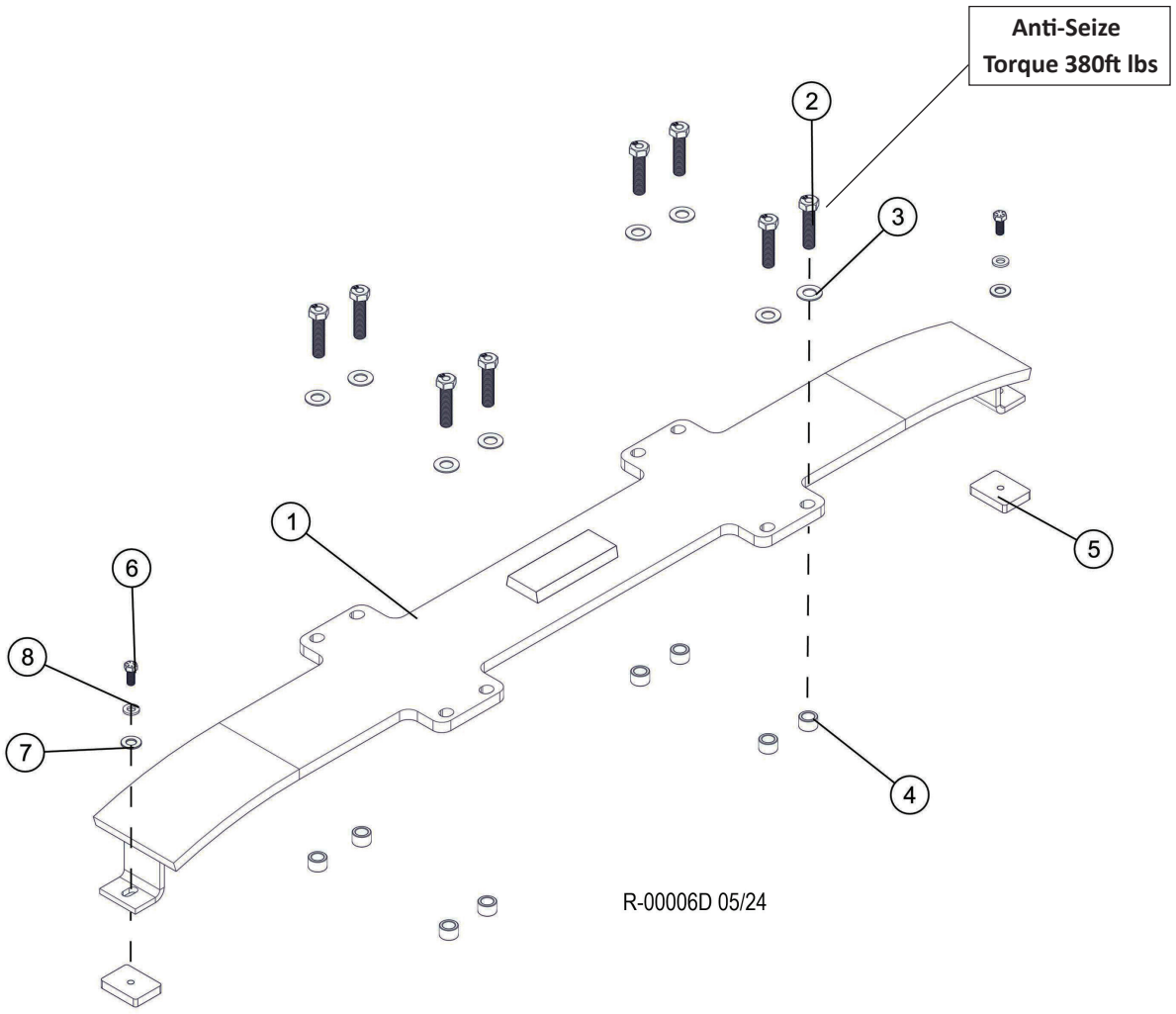

Item	Part #	Description	Qty.
1	53949	SLIDER, TRACK - 11’0”,11’-2” CAR BODY TL735/45,TL	2
2	53946	BOLT - 24MM-3.0-100MM 10.9 **ANTI-SEIZE (TORQUE 380FT LBS)**	16
3	15579	WASHER, SAE FLAT - 1”	16
4	53950	SPACER, TRACK SLIDER - 1.62” X 1”	16
5	47604	BAR, TAPPED 3’ X 4” X 5/8”	4
6	15502	BOLT - .625” X 1.5”	4
7	10771	WASHER, SAE FLAT - .625”	4
8	23210	WASHER, SAE FLAT - .625” (EXTRA THICK)	4

R100-00060 - TRACK SLIDER - TN735D, TN745D, TN755D

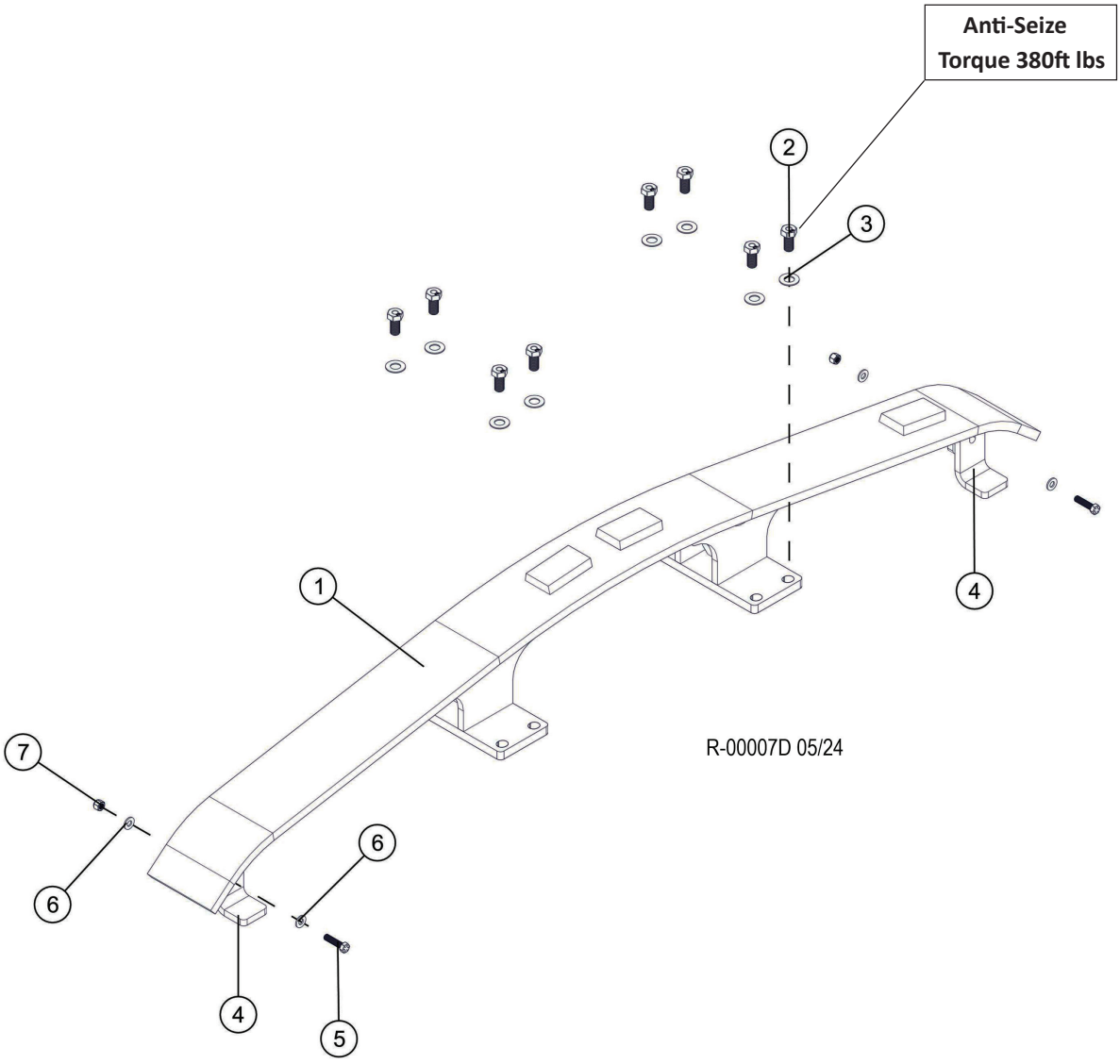

Item	Part #	Description	Qty.
1	47690	SLIDER, TRACK - TN745/765 11’-2”	2
2	21444	BOLT - 24MM X 2.0P X 50MM 10.9 **ANTI-SEIZE (TORQUE 380FT LBS)**	16
3	15579	WASHER, SAE FLAT - 1”	16
4	47911	PLATE, TRACK SLIDER SUPPORT 11’-2” NON L	4
5	15517	BOLT - .625” X 2.5”	4
6	10805	WASHER, FLAT - .625”	8
7	10816	NUT, LOCK - .625”	4

R200-00100- TRACK SLIDER - TL755, TL755WC, 775

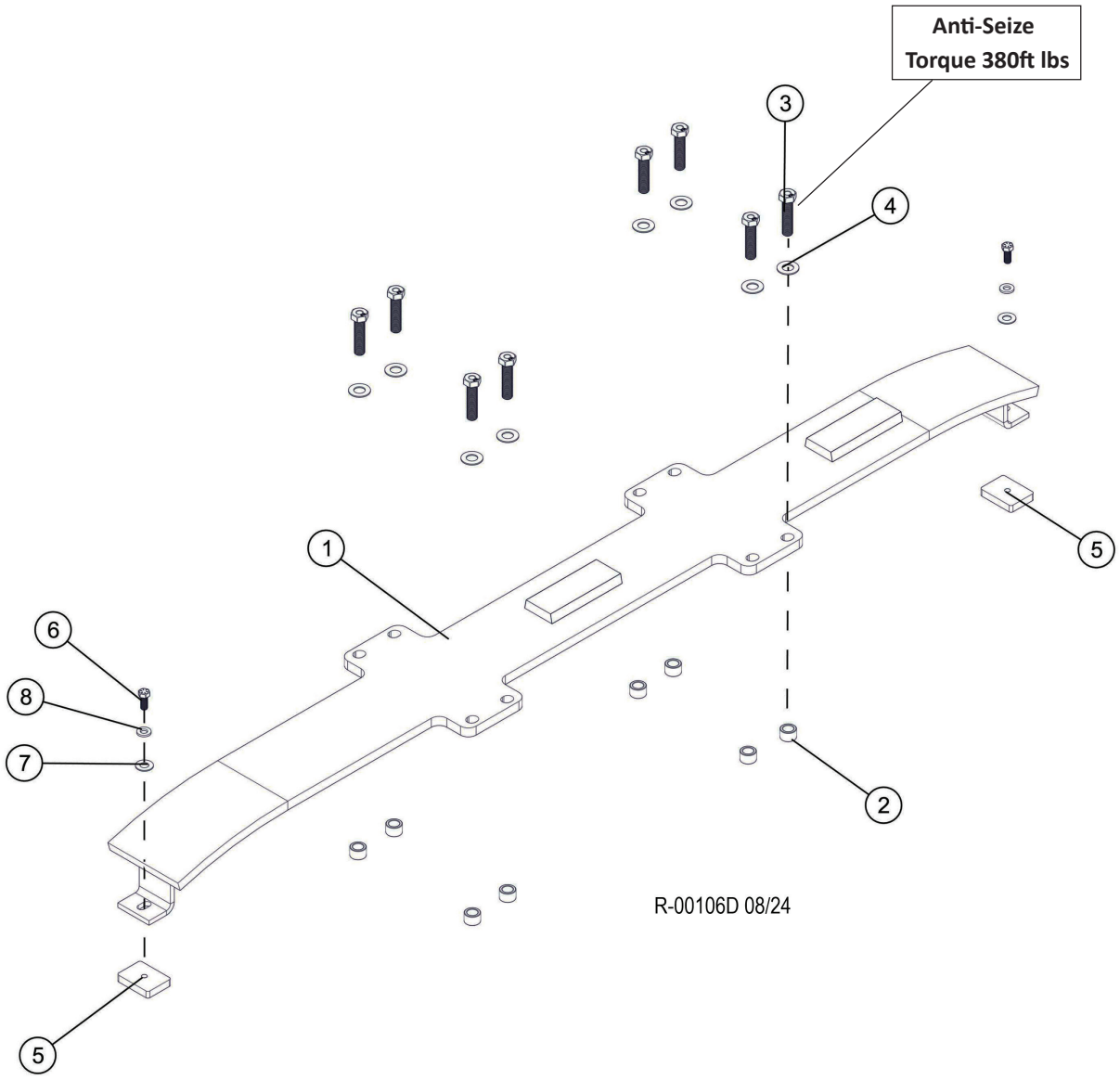

Item	Part #	Description	Qty.
1	48130	SLIDER, TRACK - 11’-2” CARBODY	2
2	53950	SPACER, TRACK SLIDER - 1.62” X 1”	16
3	53946	BOLT - 24MM-3.0-100MM 10.9 **ANTI-SEIZE (TORQUE 380FT LBS)**	16
4	15579	WASHER, SAE FLAT - 1”	16
5	47604	BAR, TAPPED 3’ X 4” X 5/8”	4
6	15502	BOLT - .625” X 1.5”	4
7	10771	WASHER, SAE FLAT - .625”	4
8	23210	WASHER, SAE FLAT - .625” (EXTRA THICK)	4

R100-00280 - TRACK SHOE D7 48 LINK 600MM SG - 745D, 755D

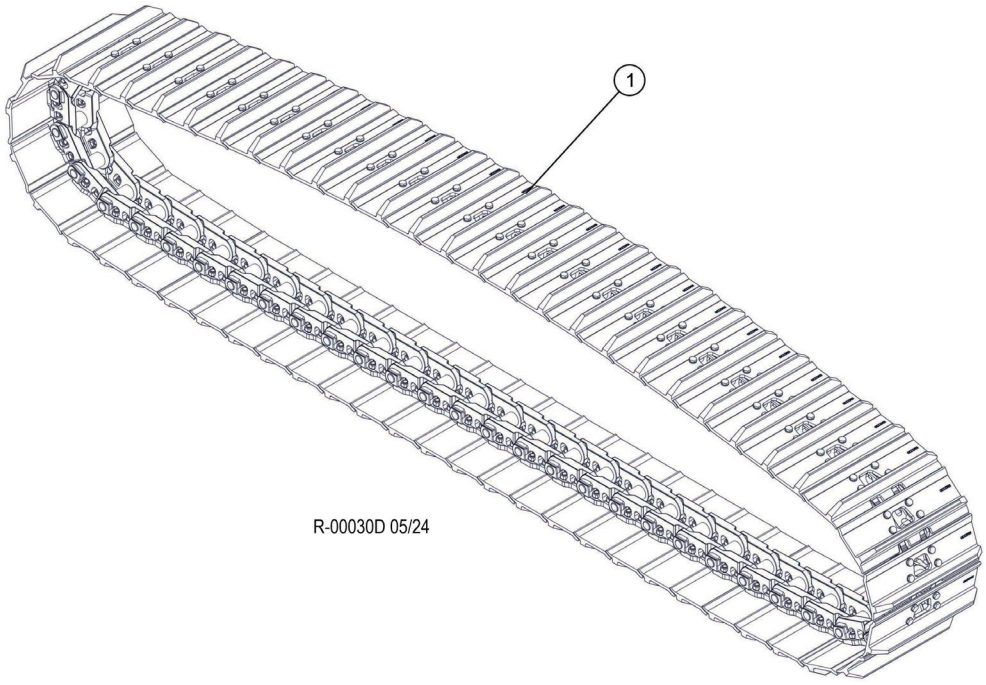

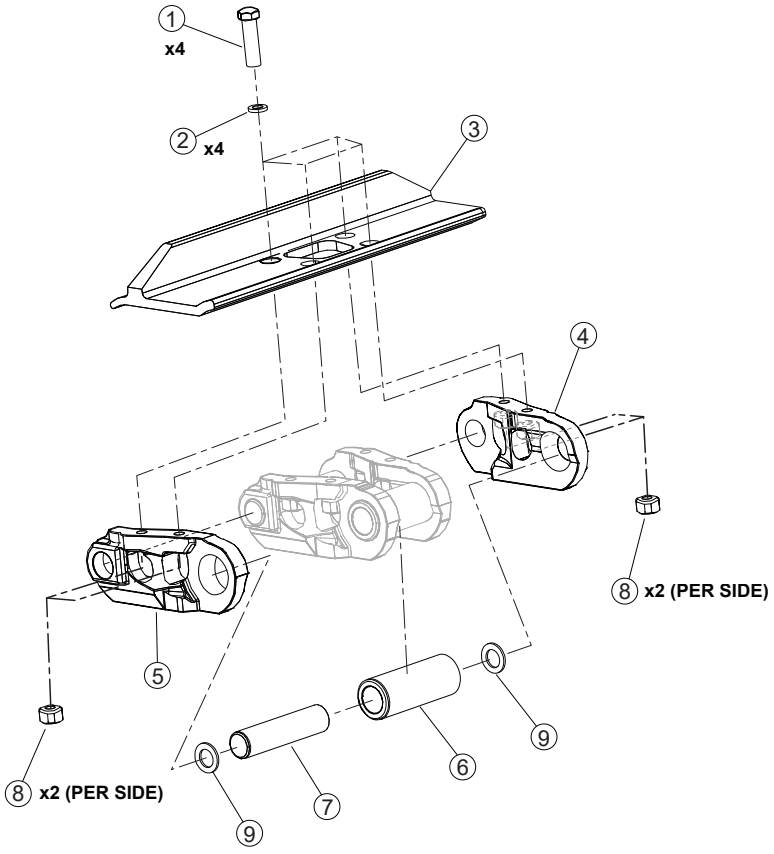

R-00100D 07/24

R100-00280 - TRACK SHOE D7 48 LINK 600MM SG - 745D, 755D

Item	Part #	Description	Qty.
1	55481	TRACK, RAIL W/600 SINGLE D7 - 48 LINKS	2

Item	Part #	Description	Qty.
1	18354	BOLT, TRACK SHOE	192
2	N/A	WASHERS	192
3	ID3038A	TRACK SHOE	-
4	56554	LINK, TRACK LH (325)	48
5	56553	LINK, TRACK - RH (325)	48
6	SI 1177	BUSHING	47
7	56567	PIN	2
8	CR5923	NUT, TRACK SHOE	192
9	56555	SEAL, LINKS	94
*	CR734	PIN, TRACK MASTER - 325	1

R100-00290 - TRACK SHOE D7 48 LINK 600MM HD SG - 745D, 755D

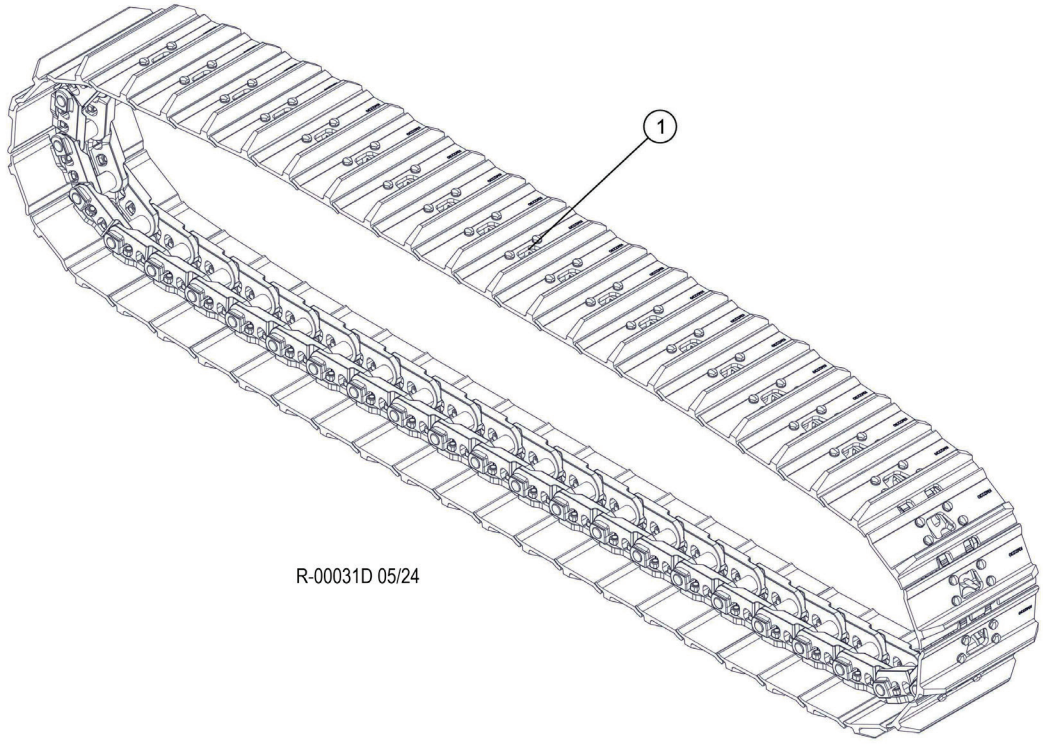

R-00031D 05/24

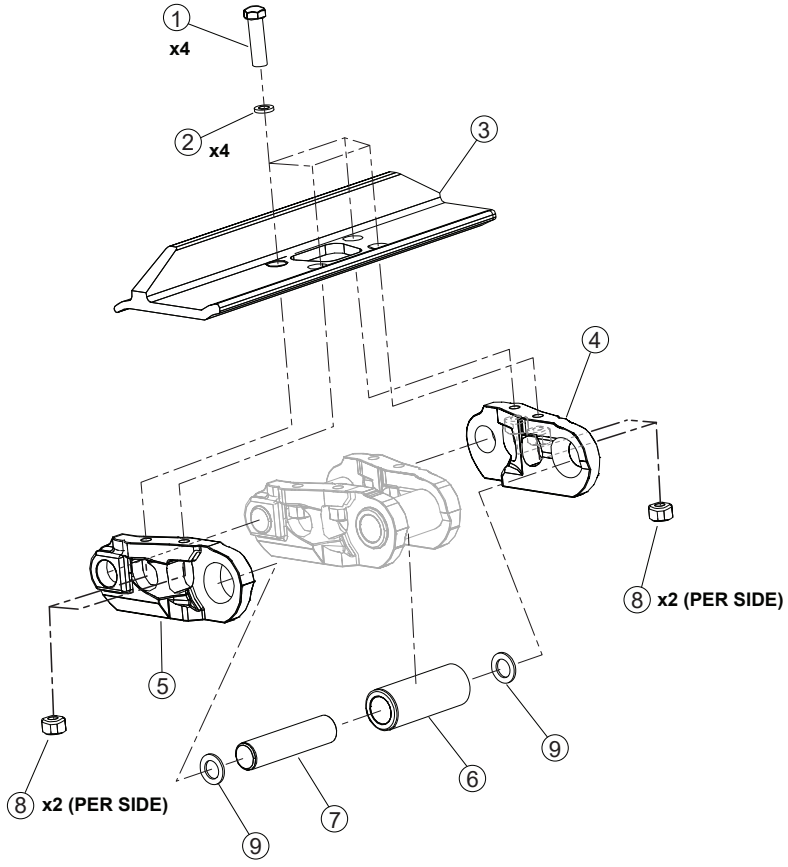

R-00086D 07/24

R100-00290 - TRACK SHOE D7 48 LINK 600MM HD SG - 745D, 755D

Item	Part #	Description	Qty.
1	55319	TRACK, RAIL W/600 SG-48 LINK D7G HEAVY D	2

Item	Part #	Description	Qty.
1	SI 878	BOLT, TRACK SHOE	180
2	N/A	WASHER	180
3	KM2230 610	SHOE - 600 SINGLE	45
4	SI 649A	LINK (RIGHT)	45
5	SI 650a	LINK (LEFT)	45
6	SI 877	BUSHING	44
-	SI 607	BUSHING, MASTER LINK	1
7	SI 604	PIN	44
-	SI 876	PIN, MASTER LINK	1
8	SI 652	NUT, TRACK SHOE	180
9	698560	SEAL, LINK	88
-	58368	TRACK LINK REPAIR	1

R100-00300 - TRACK SHOE D7 48 LINK 600MM SG - 745D, 755D

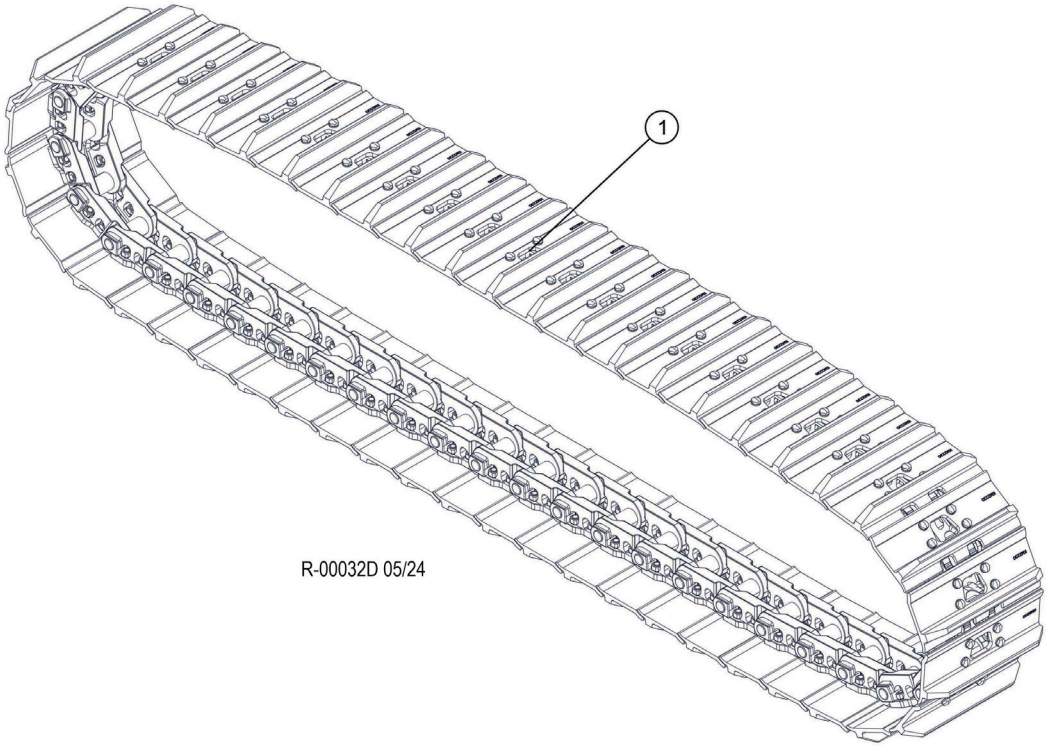

R-00032D 05/24

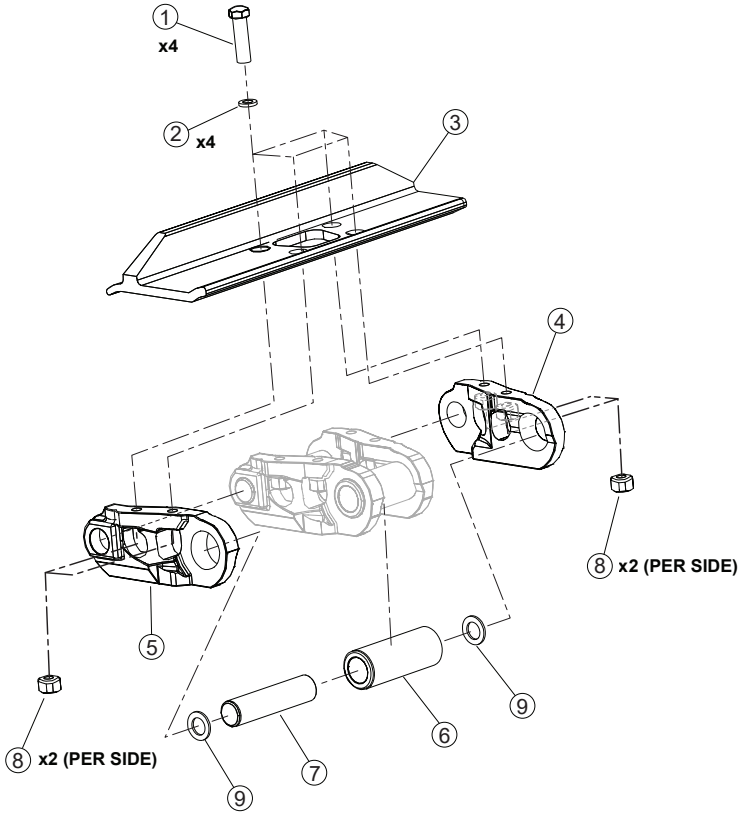

R-00099D 07/24

R100-00300 - TRACK SHOE D7 48 LINK 600MM SG - 745D, 755D

Item	Part #	Description	Qty.
1	57577	TRACK, RAIL W/600-48 LINK D7 (CAT BRAND)	2

Item	Part #	Description	Qty.
1	18354	BOLT, TRACK SHOE	180
2	N/A	WASHERS	180
3	17861	TRACK SHOE 330/600MM SG	45
4	21450	LINK, TRACK LH (330)	45
5	21451	LINK, TRACK - RH (330)	45
6	698440	BUSHING	44
*	56449	BUSHING, MASTER LINK	1
7	21456	PIN	44
*	21457	PIN, TRACK MASTER - 330	1
8	17864	NUT, TRACK SHOE	180
9	698400	SEAL, LINKS	88
*	55970	SEAL, MASTER LINK	2

R100-00310 - TRACK RAIL W/SHOE D7 48 LINK 600MM TALL - 745D, 755D

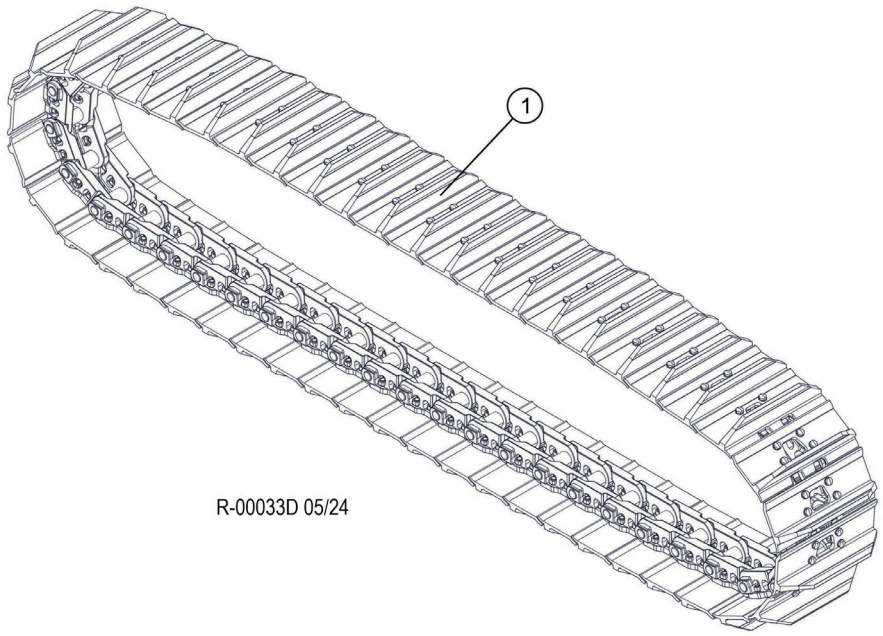

R-00033D 05/24

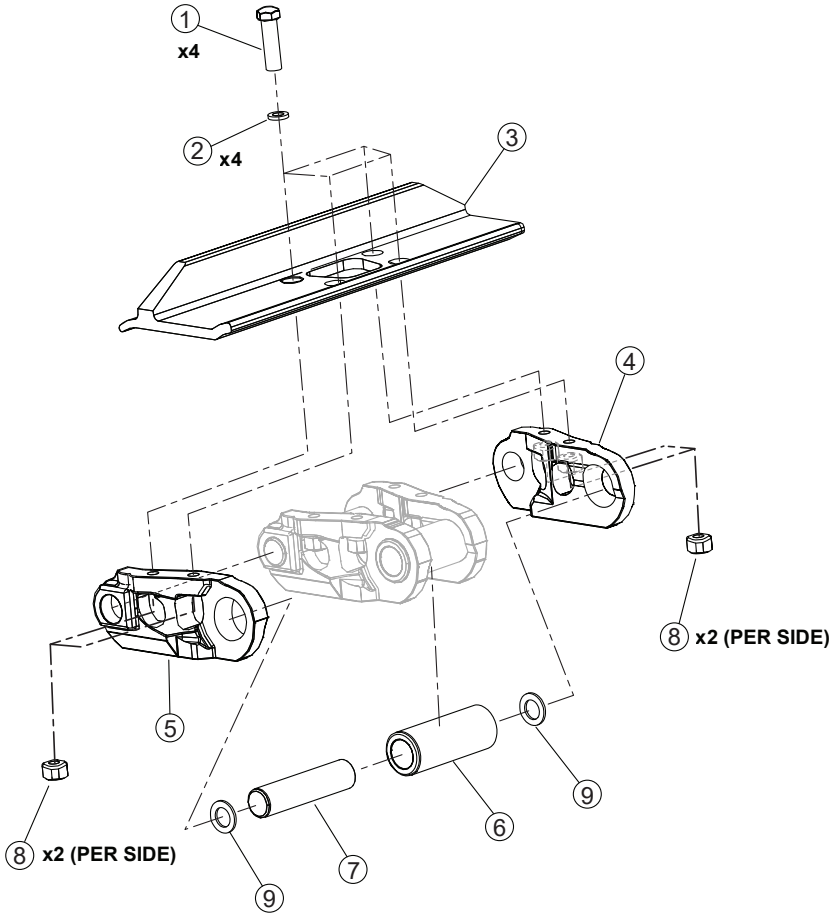

R-00087D 07/24

R100-00310 - TRACK RAIL W/SHOE D7 48 LINK 600MM TALL - 745D, 755D

Item	Part #	Description	Qty.
1	58600	TRACK, RAIL W/600 SG-48 LINK D7G TALL GR	2

Item	Part #	Description	Qty.
1	SI 878	BOLT, TRACK SHOE	180
2	N/A	WASHER	180
3	SH0027A-000-00	SHOE - 600 SINGLE	45
4	SI 649A	LINK (RIGHT)	45
5	SI 650a	LINK (LEFT)	45
6	SI 877	BUSHING	44
-	SI 607	BUSHING, MASTER LINK	1
7	SI 604	PIN	44
-	SI 876	PIN, MASTER LINK	1
8	SI 652	NUT, TRACK SHOE	180
9	698560	SEAL, LINK	88
-	58368	TRACK LINK REPAIR	1

R100-00330 - TRACK SHOE D7 48 LINK 700MM HD SG - 745D, 755D

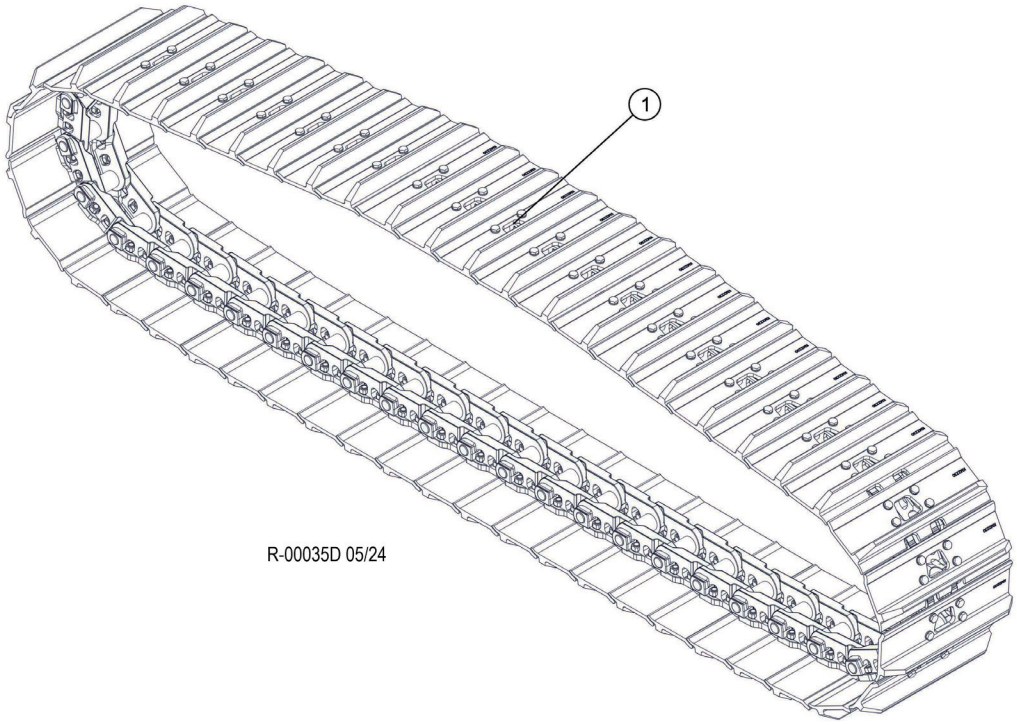

R-00035D 05/24

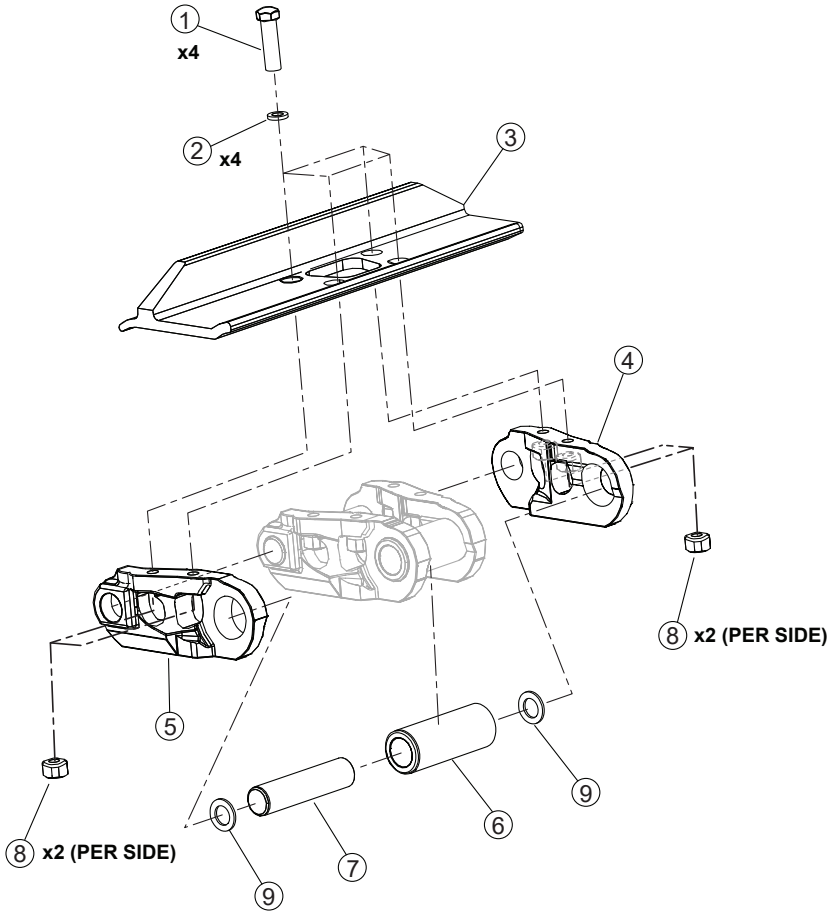

R-00088D 07/24

R100-00330 - TRACK SHOE D7 48 LINK 700MM HD SG - 745D, 755D

Item	Part #	Description	Qty.
1	57184	TRACK, RAIL W/700 SG (48 LINK) D7G HD	2

Item	Part #	Description	Qty.
1	SI 878	BOLT, TRACK SHOE	180
2	N/A	WASHER	180
3	58357	SHOE, TRACK - 710 mm D7G	45
4	SI 649A	LINK (RIGHT)	45
5	SI 650a	LINK (LEFT)	45
6	SI 877	BUSHING	44
-	SI 607	BUSHING, MASTER LINK	1
7	SI 604	PIN	44
-	SI 876	PIN, MASTER LINK	1
8	SI 652	NUT, TRACK SHOE	180
9	698560	SEAL, LINK	88
-	58368	TRACK LINK REPAIR	

R100-00340 - TRACK SHOE D7 48 LINK 700MM HD SG - 745D, 755D

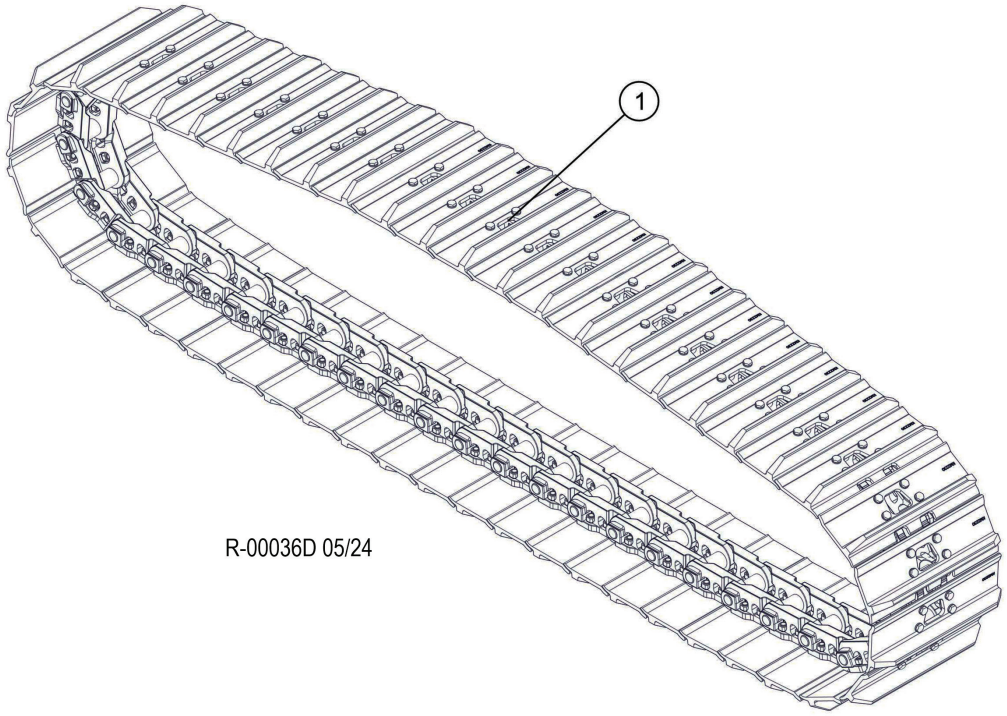

R-00036D 05/24

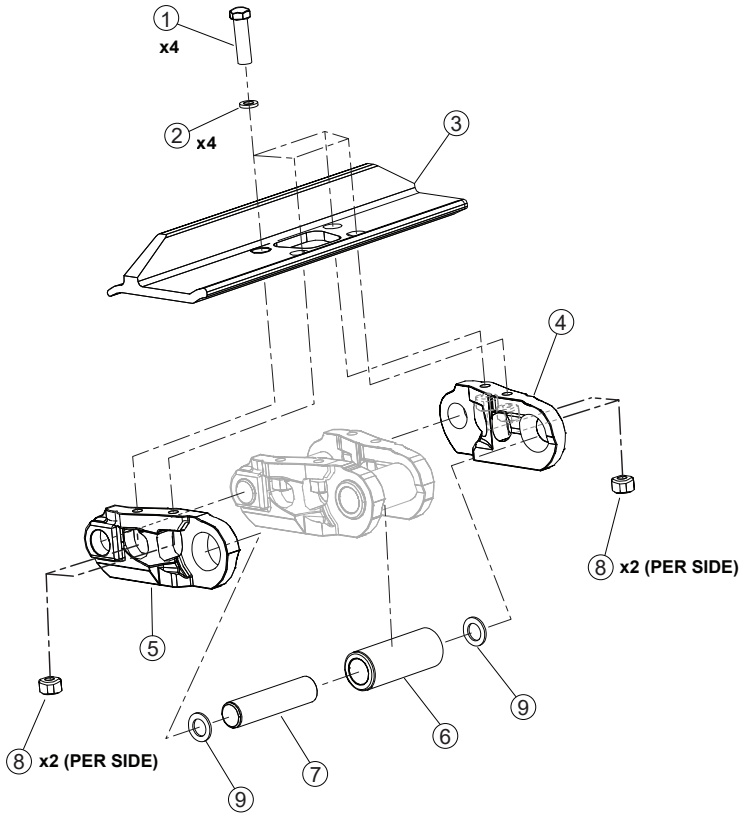

R-00097D 07/24

R100-00340 - TRACK SHOE D7 48 LINK 700MM HD SG - 745D, 755D

Item	Part #	Description	Qty.
1	58310	TRACK, RAIL W/700 SG (48LINK) D-7 CAT	2

Item	Part #	Description	Qty.
1	18354	BOLT, TRACK SHOE	180
2	N/A	WASHERS	180
3	21055	TRACK SHOE 330/700MM SG	45
4	21450	LINK, TRACK LH (330)	45
5	21451	LINK, TRACK - RH (330)	45
6	698440	BUSHING	44
*	56449	BUSHING, MASTER LINK	1
7	21456	PIN	44
*	21457	PIN, TRACK MASTER - 330	1
8	17864	NUT, TRACK SHOE	180
9	698400	SEAL, LINKS	88
*	55970	SEAL, MASTER LINK	2

R100-00360 - TRACK SHOE D7 48 LINK 700MM HD DG - 745D, 755D

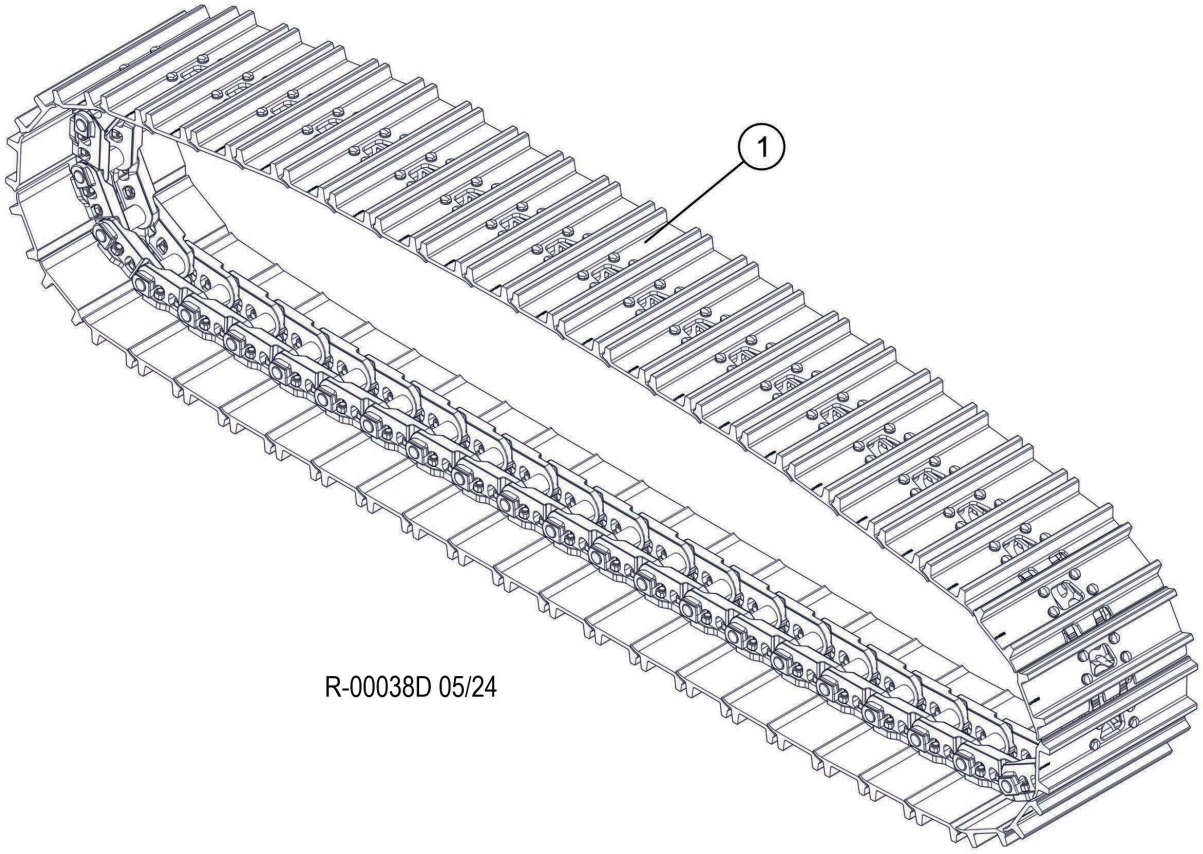

R-00038D 05/24

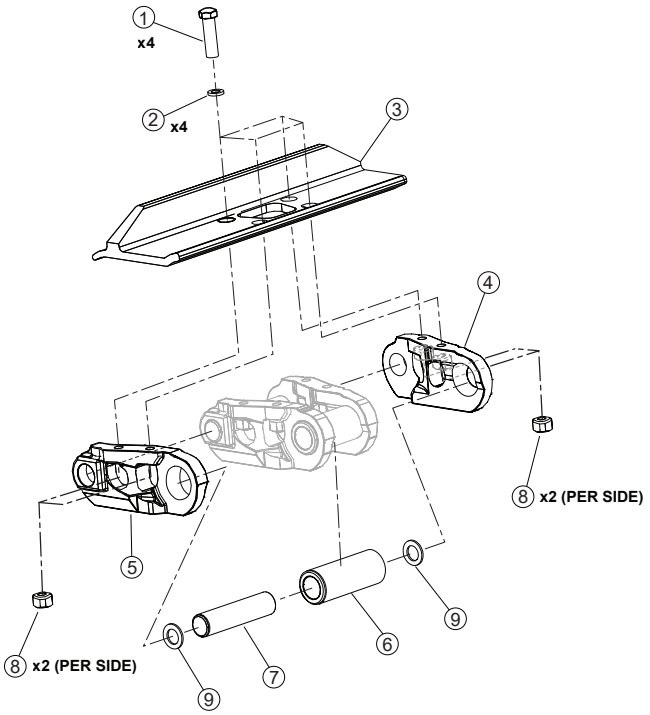

R-00089D 07/24

R100-00360 - TRACK SHOE D7 48 LINK 700MM HD DG - 745D, 755D

Item	Part #	Description	Qty.
1	57752	TRACK, RAIL W/700 DG - D7G (48 LINK) HD	2

Item	Part #	Description	Qty.
1	SI 878	BOLT, TRACK SHOE	180
2	N/A	WASHER	180
3	KM2447	SHOE, TRACK - 700 MM	45
4	SI 649A	LINK (RIGHT)	45
5	SI 650A	LINK (LEFT)	45
6	SI 877	BUSHING	44
-	SI 607	BUSHING, MASTER LINK	1
7	SI 604	PIN	44
-	SI 876	PIN, MASTER LINK	1
8	SI 652	NUT, TRACK SHOE	180
9	698560	SEAL, LINK	88

R100-00380 - TRACK SHOE D7 48 LINK 850MM HD TG - 745D, 755D

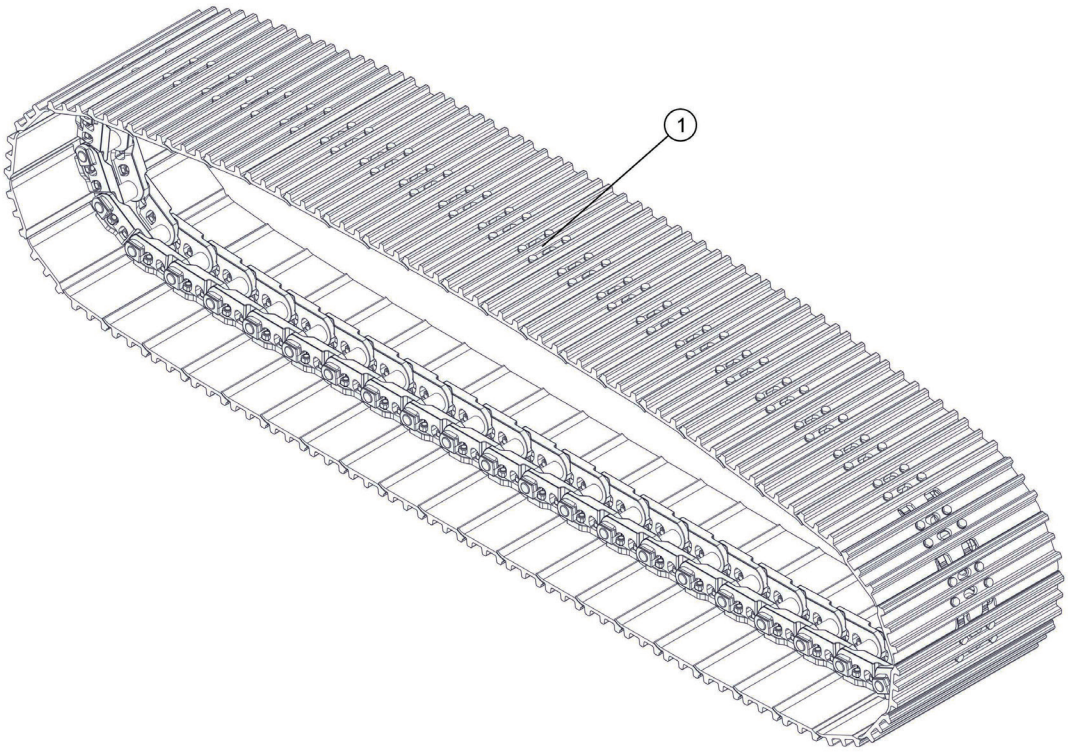

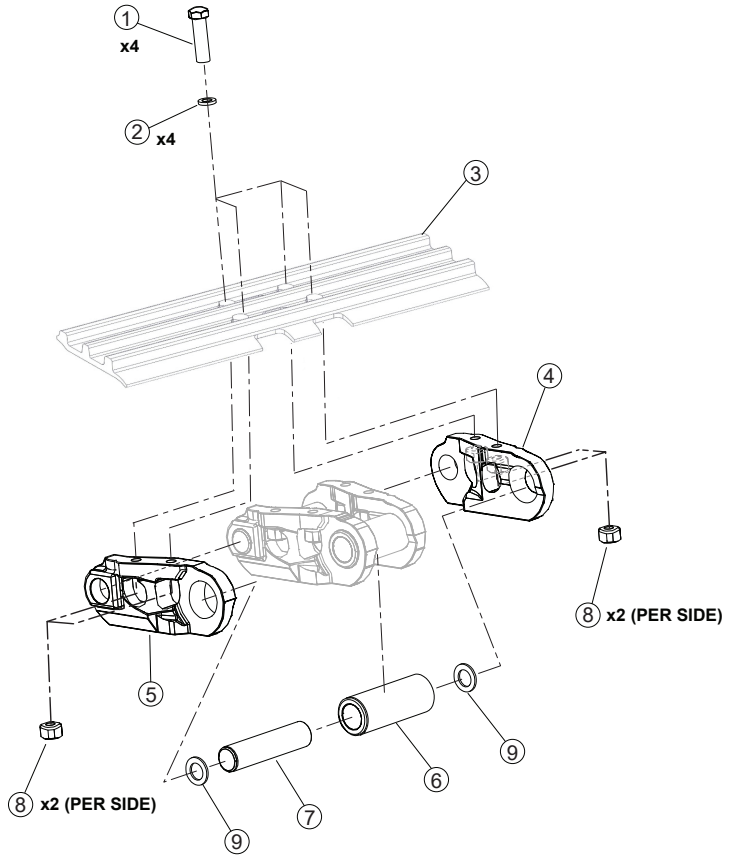

R-00094D 07/24

R100-00380 - TRACK SHOE D7 48 LINK 850MM HD TG - 745D, 755D

Item	Part #	Description	Qty.
1	**55632**	TRACK, RAIL W/850 TG (48 LINK) D7G HD	2

Item	Part #	Description	Qty.
1	SI 651	BOLT, TRACK SHOE	188
2	N/A	WASHERS	188
3	SI 653	TRACK SHOE	47
4	SI 650A	LINK, TRACK LH	47
5	SI 649A	LINK, TRACK - RH	44
6	SI 877	BUSHING	46
*	SI 607	BUSHING, MASTER LINK	1
7	SI 604	PIN	44
*	SI 605	PIN, TRACK MASTER	1
8	SI 652	NUT, TRACK SHOE	188
9	KM 2339	SEAL, LINKS	96

R100-00390 - TRACK SHOE D7 48 LINK 900MM TG - TN745D, TN755D

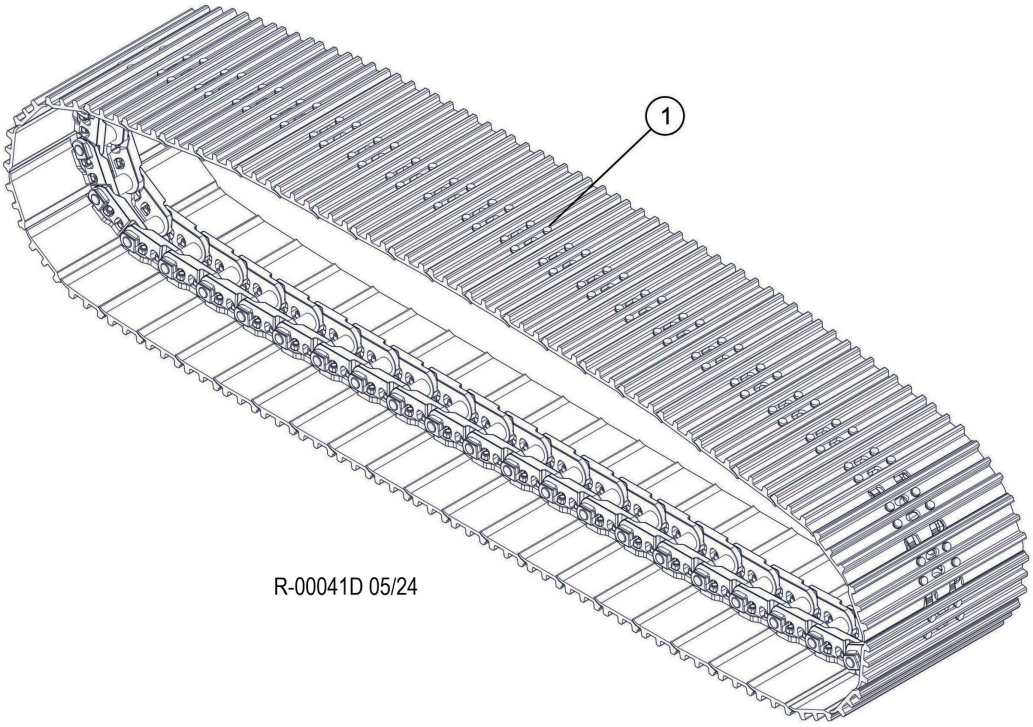

R-00041D 05/24

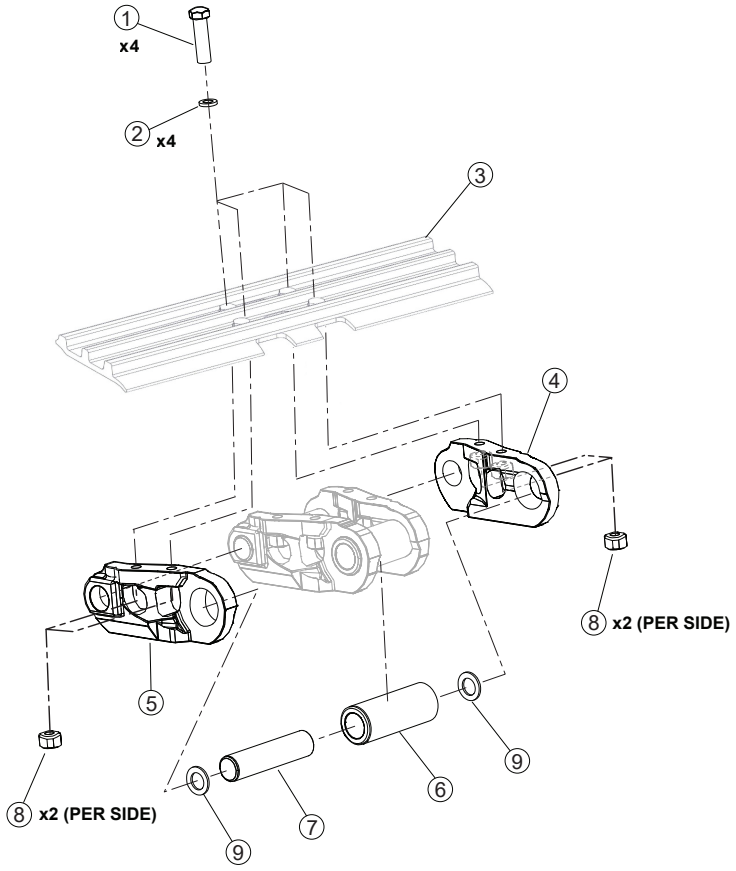

R-00092D 07/24

R100-00390 - TRACK SHOE D7 48 LINK 900MM TG - TN745D, TN755D

Item	Part #	Description	Qty.
1	53301	TRACK, RAIL W/900 TG (48 LINK) D7G HD	2

Item	Part #	Description	Qty.
1	SI 651	BOLT, TRACK SHOE	188
2	N/A	WASHERS	188
3	SI 653	TRACK SHOE	47
4	SI 650A	LINK, TRACK LH	47
5	SI 649A	LINK, TRACK - RH	44
6	SI 877	BUSHING	46
*	SI 607	BUSHING, MASTER LINK	1
7	SI 604	PIN	44
*	SI 605	PIN, TRACK MASTER	1
8	SI 652	NUT, TRACK SHOE	188
9	KM 2339	SEAL, LINKS	96

R100-00400 - TRACK SHOE D7G 48 LINK TRILINK 900MM TG - TN745D, TN755

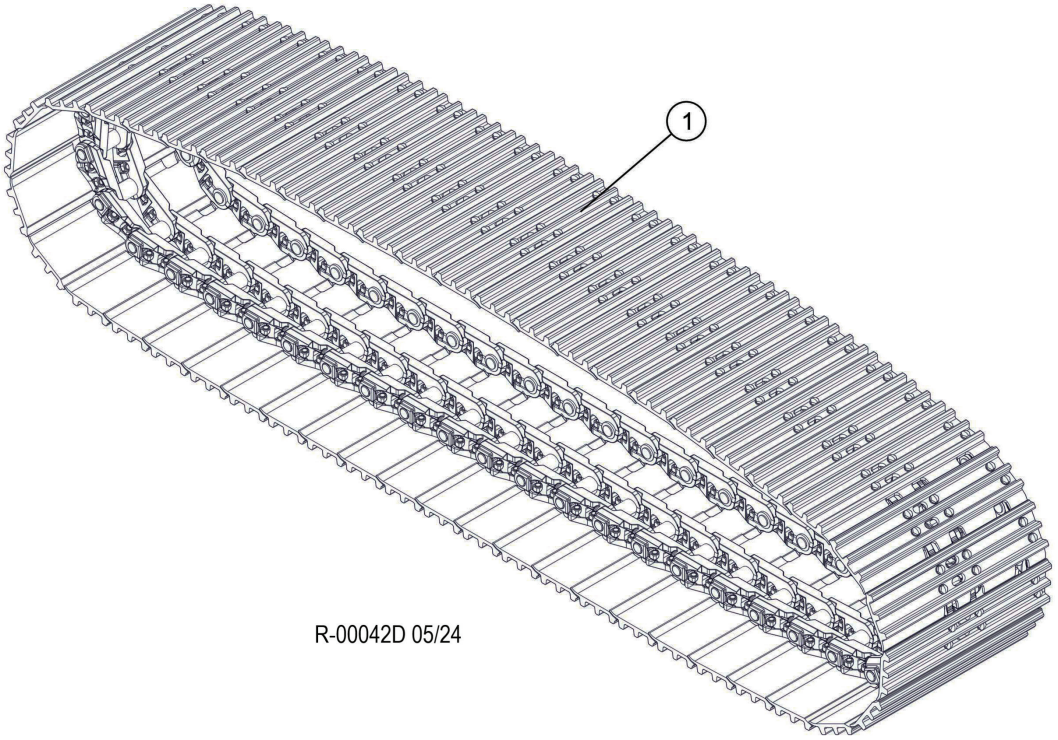

R-00042D 05/24

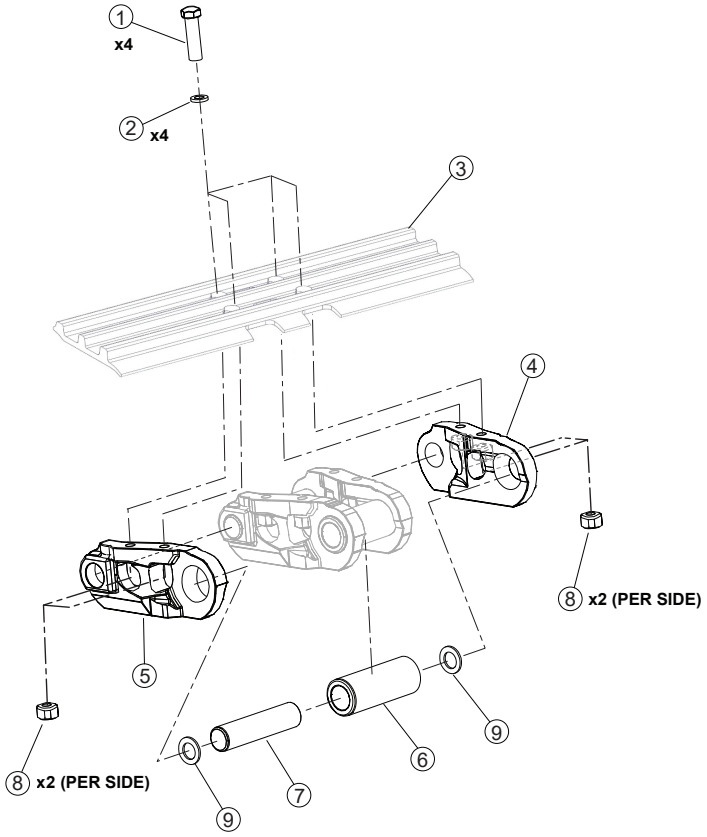

R-00093D 07/24

R100-00400 - TRACK SHOE D7G 48 LINK TRILINK 900MM TG - TN745D, TN755

Item	Part #	Description	Qty.
1	53320	TRACK, RAIL W/900 TG TRI TRACK HD - 48 L	2

Item	Part #	Description	Qty.
1	SI 1878	BOLT, TRACK SHOE (Torque to 300 ft lbs (400 Nm)	282
2	N/A	WASHER	282
3	698630	SHOE - 900MM TRIPLE	46
4	SI 649A	LINK (right)	46
5	SI 650A	LINK (left)	4
6	SI 877	BUSHING	46
-	SI 607	BUSHING, MASTER LINK	1
7	SI 604	PIN	42
-	SI 605	PIN, MASTER LINK	1
8	SI 652	NUT, TRACK SHOE	282
9	698560	SEAL, LINK	88
			1

R200-00100 - TRACK SHOE D7 51 LINK 600MM TN755D WEST COAST

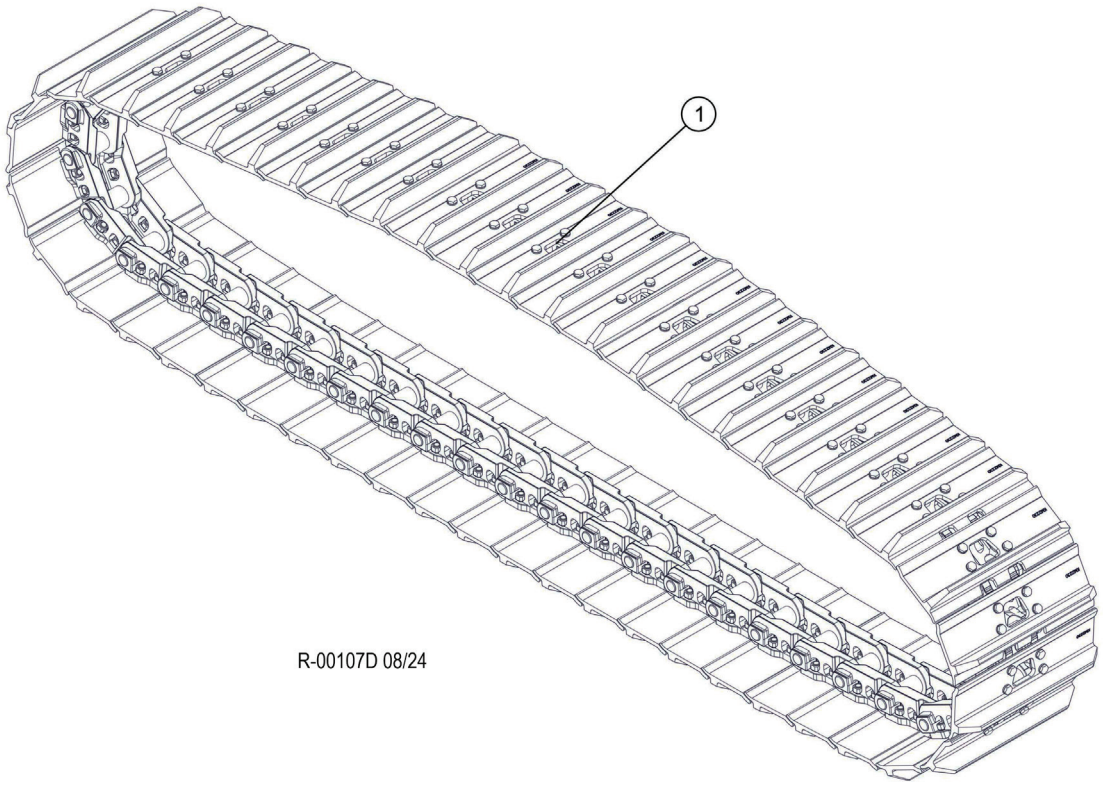

R-00107D 08/24

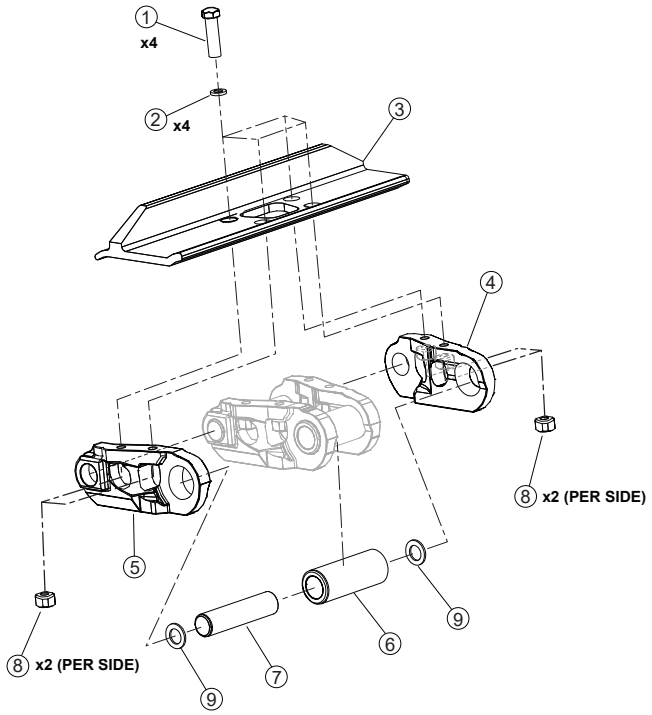

R-00089D 07/24

R200-00100 - TRACK SHOE D7 51 LINK 600MM TN755D WEST COAST

Item	Part #	Description	Qty.
1	58115	TRACK, RAIL W/600 SG-51 LINK D7G HEAVY D	2

Item	Part #	Description	Qty.
1	SI 878	BOLT, TRACK SHOE	180
2	N/A	WASHER	180
3	KM2230	SHOE, TRACK	45
4	SI 649A	LINK (RIGHT)	45
5	SI 650A	LINK (LEFT)	45
6	SI 877	BUSHING	44
-	SI 607	BUSHING, MASTER LINK	1
7	SI 604	PIN	44
-	SI 876	PIN, MASTER LINK	1
8	SI 652	NUT, TRACK SHOE	180
9	698560	SEAL, LINK	88

R200-00210 - TRACK SHOE D7 51 LINK 700MM TN755D WEST COAST

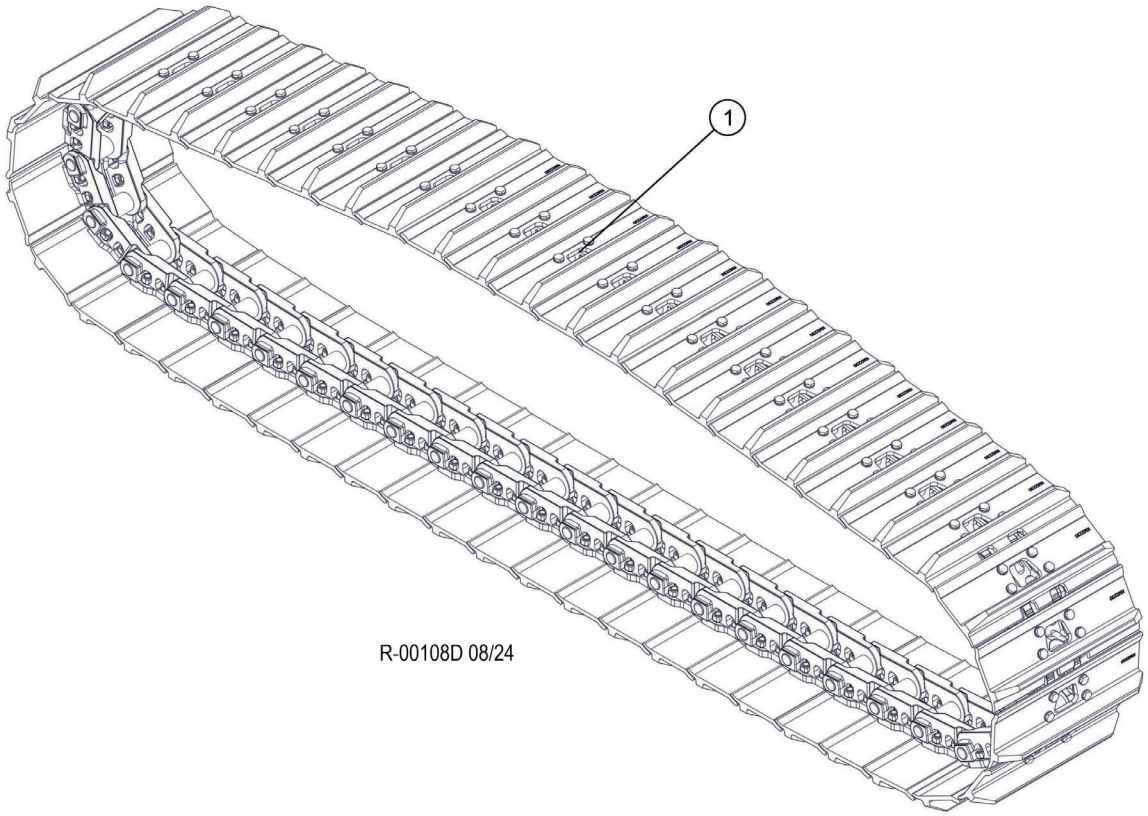

R-00108D 08/24

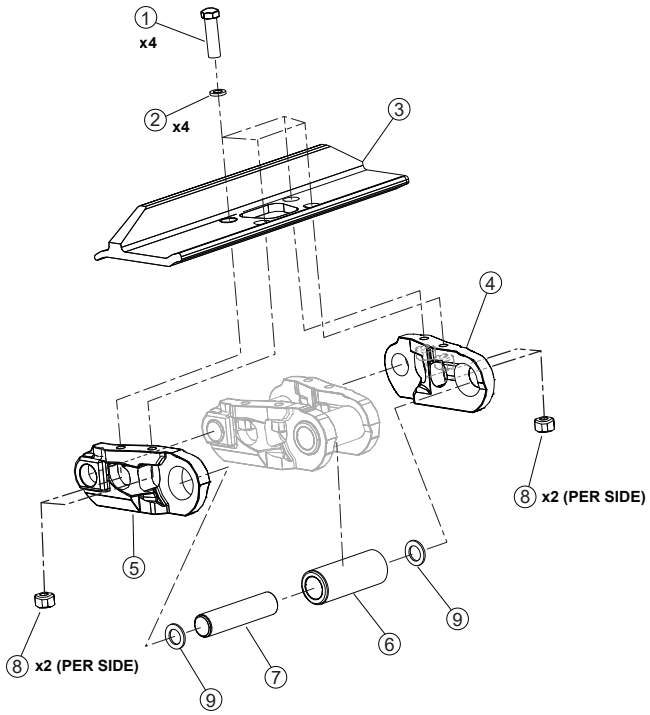

R-00089D 07/24

R200-00210 - TRACK SHOE D7 51 LINK 700MM TN755D WEST COAST

Item	Part #	Description	Qty.
1	58157	TRACK, RAIL W/700 SG (51 LINK) D7G HD	2

Item	Part #	Description	Qty.
1	SI 878	BOLT, TRACK SHOE	180
2	N/A	WASHER	180
3	KM2230	SHOE, TRACK	45
4	SI 649A	LINK (RIGHT)	45
5	SI 650A	LINK (LEFT)	45
6	SI 877	BUSHING	44
-	SI 607	BUSHING, MASTER LINK	1
7	SI 604	PIN	44
-	SI 876	PIN, MASTER LINK	1
8	SI 652	NUT, TRACK SHOE	180
9	698560	SEAL, LINK	88

R200-00220 - TRACK SHOE D7 51 LINK 710MM TN755D WEST COAST

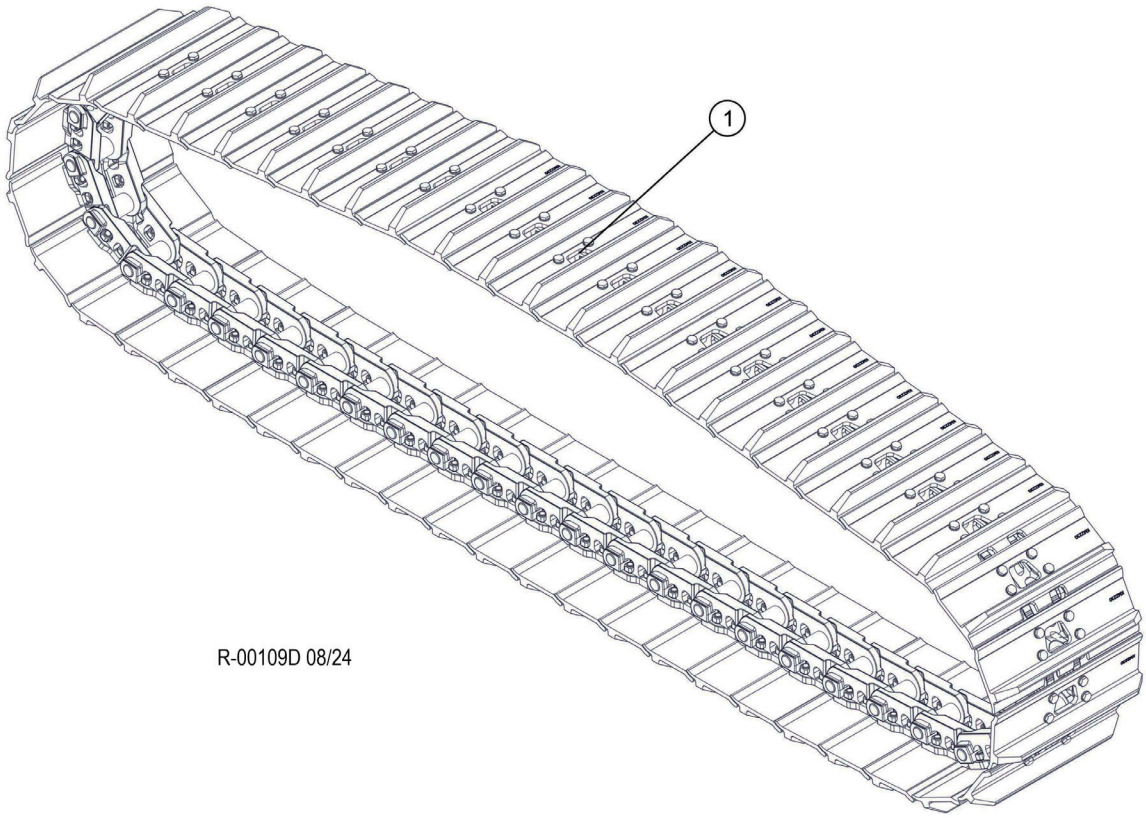

R-00109D 08/24

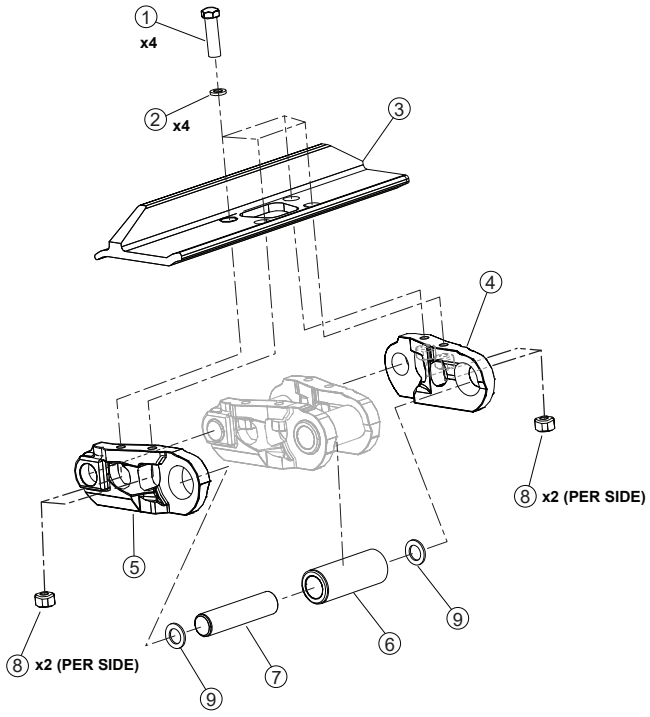

R-00089D 07/24

R200-00220 - TRACK SHOE D7 51 LINK 710MM TN755D WEST COAST

Item	Part #	Description	Qty.
1	58184	TRACK, RAIL W/710 SG (51 LINK) D7G -Tall	2

Item	Part #	Description	Qty.
1	SI 878	BOLT, TRACK SHOE	180
2	N/A	WASHER	180
3	KM2230	SHOE, TRACK	45
4	SI 649A	LINK (RIGHT)	45
5	SI 650A	LINK (LEFT)	45
6	SI 877	BUSHING	44
-	SI 607	BUSHING, MASTER LINK	1
7	SI 604	PIN	44
-	SI 876	PIN, MASTER LINK	1
8	SI 652	NUT, TRACK SHOE	180
9	698560	SEAL, LINK	88

R200-00100 - 11’0 NL CARBODY

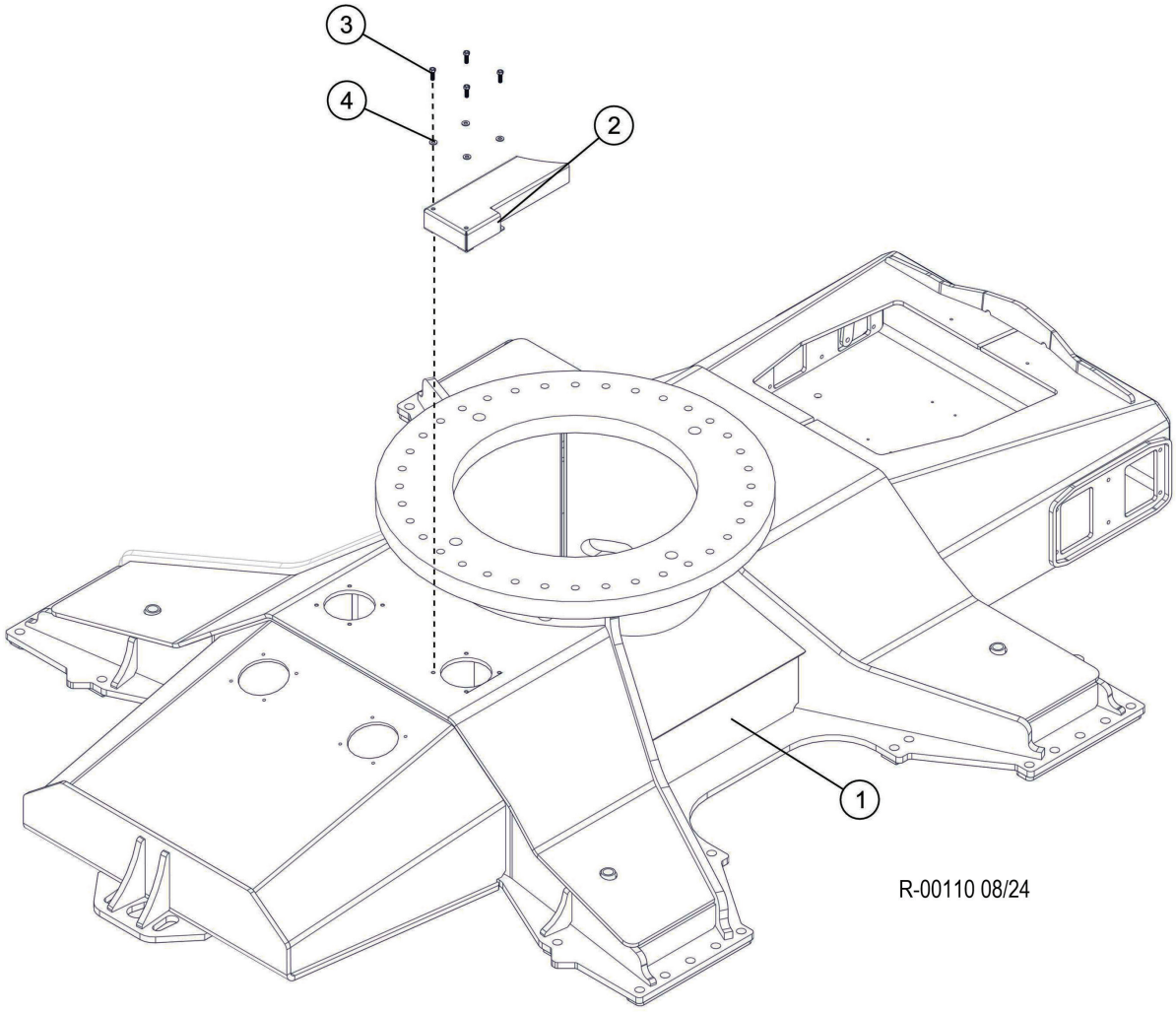

Item	Part #	Description	Qty.
1	650950	CARBODY, TRACK MACHINE - NL TN755	1
2	65408	PLATE, FUEL SENDER COVER-TN-755	1
3	10739	BOLT - .5” X 1.5”	4
4	15534	WASHER, SAE FLAT - .5”	4

R200-00100 - 11’0 NL CARBODY

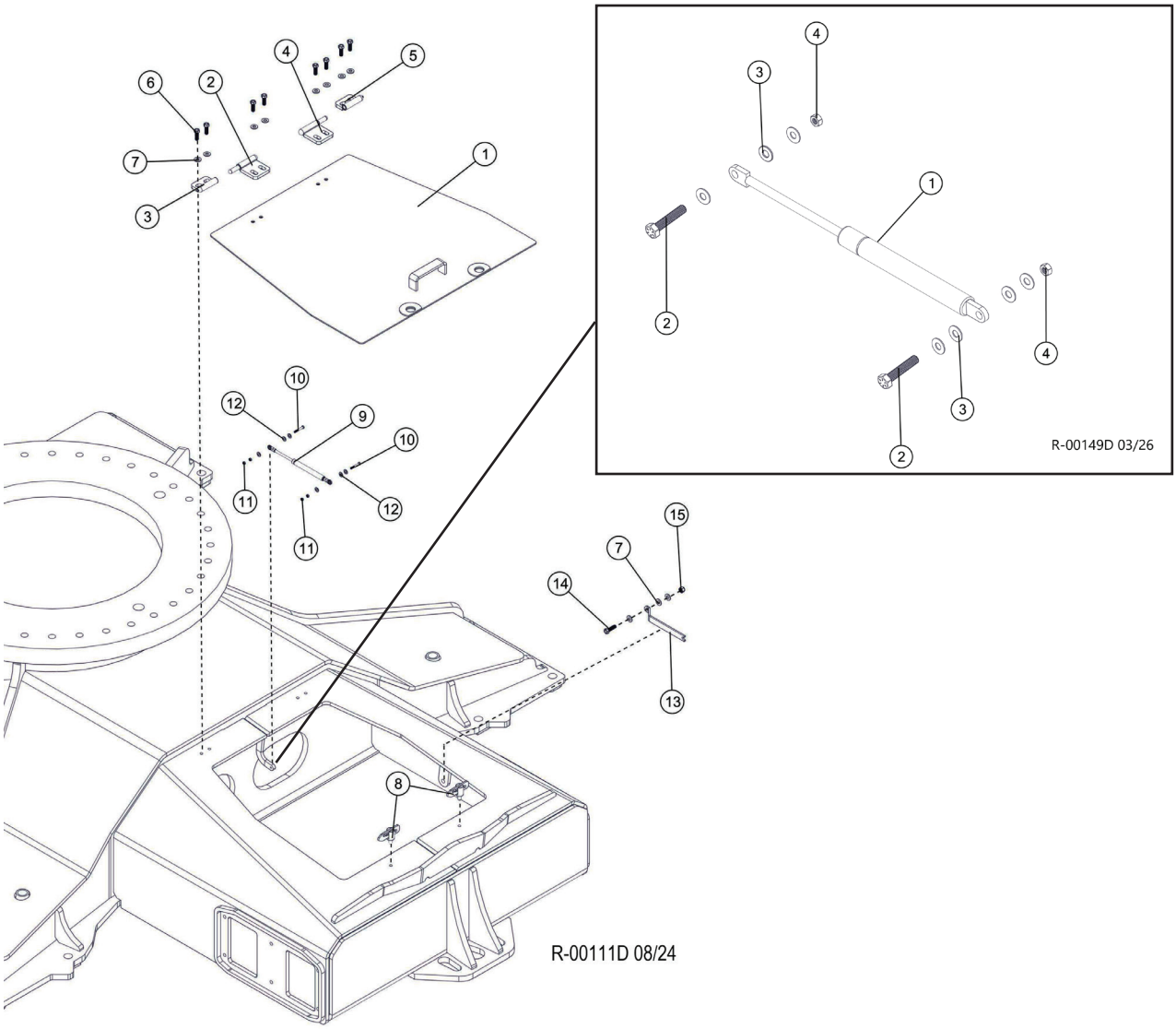

Item	Part #	Description	Qty.
1	65105	WELDMENT, TRUNK LID NL	1
2	65135	HINGE, MALE	1
3	65134	HINGE, FEMALE	1
4	65310	HINGE, MALE	1
5	65309	HINGE, FEMALE	1
6	10739	BOLT - .5” X 1.5”	8
7	10804	WASHER, FLAT - 0.5”	11
8	19771	LATCH, CAM - SHORT	2
9	57963	CYLINDER, GAS SHOCK **S/N: UP TO 1261**	1
10	59132	BOLT - 6MM-1.0P X 45MM **S/N: UP TO 1261**	2
11	16117	NUT, HEX - 6MM **S/N: UP TO 1261**	4
12	15528	WASHER, SAE FLAT - .375” **S/N: UP TO 1261**	6
13	65317	PROP ROD- NL TRUNK	1
14	18933	BOLT - .5” x 1.75”	1
15	10815	NUT, HEX - 1/2”	2
		S/N: 1261 & FORWARD	
1	695830	SHOCK, GAS, 325MM X 800N	1
2	15591	BOLT - .3125” X 1”	2
3	15559	WASHER, SAE FLAT - .3125”	7
4	10812	NUT, LOCK - .3125	2

R200-00100 - CARBODY, G, 11’2” (LVL NON-TETHERED)

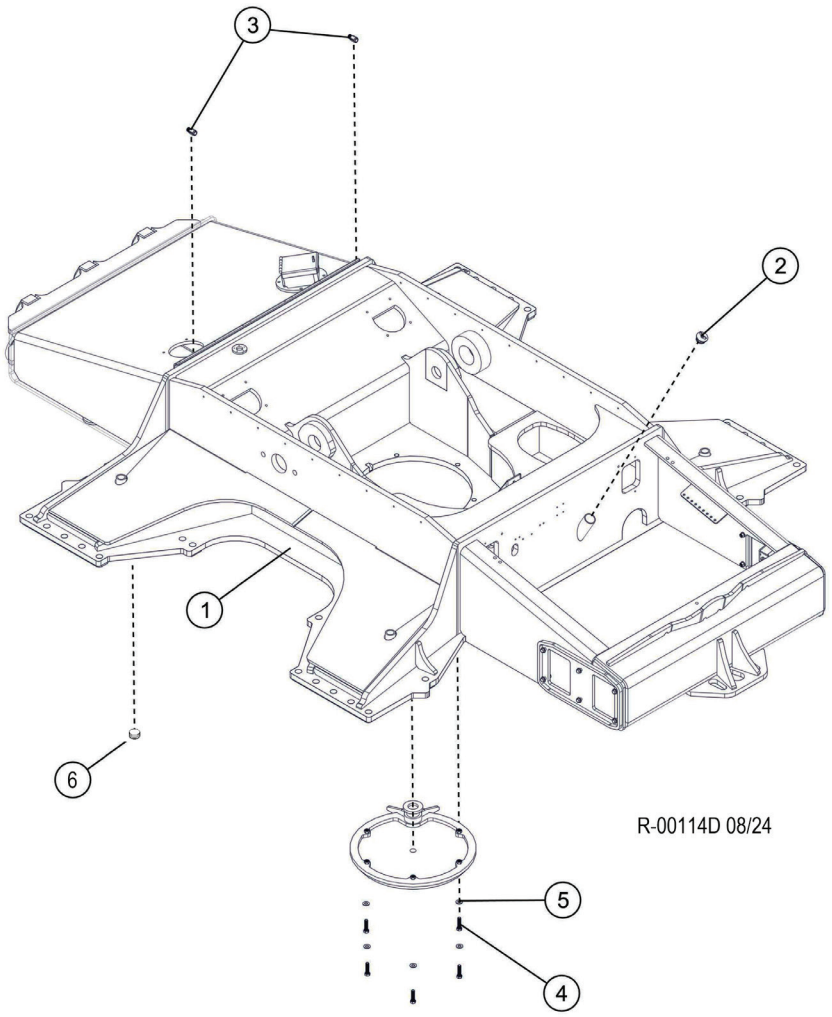

Item	Part #	Description	Qty.
1	65909	WELDMENT, CARBODY, LVL, 11’2” NO TETHER	1
2	53728	CAP, EXPANDABLE - AUX OIL TANK (TRACK)	1
3	53885	VALVE, CHECK - FUEL TANK	2
4	15517	BOLT - .625” X 2.5”	5
5	10805	WASHER, FLAT - .625”	5
6	16887	PLUG - 5406-HHP-12/ 3/4 HEX PIPE	1

R200-00100 - 11’2” LVL TRUNK LID

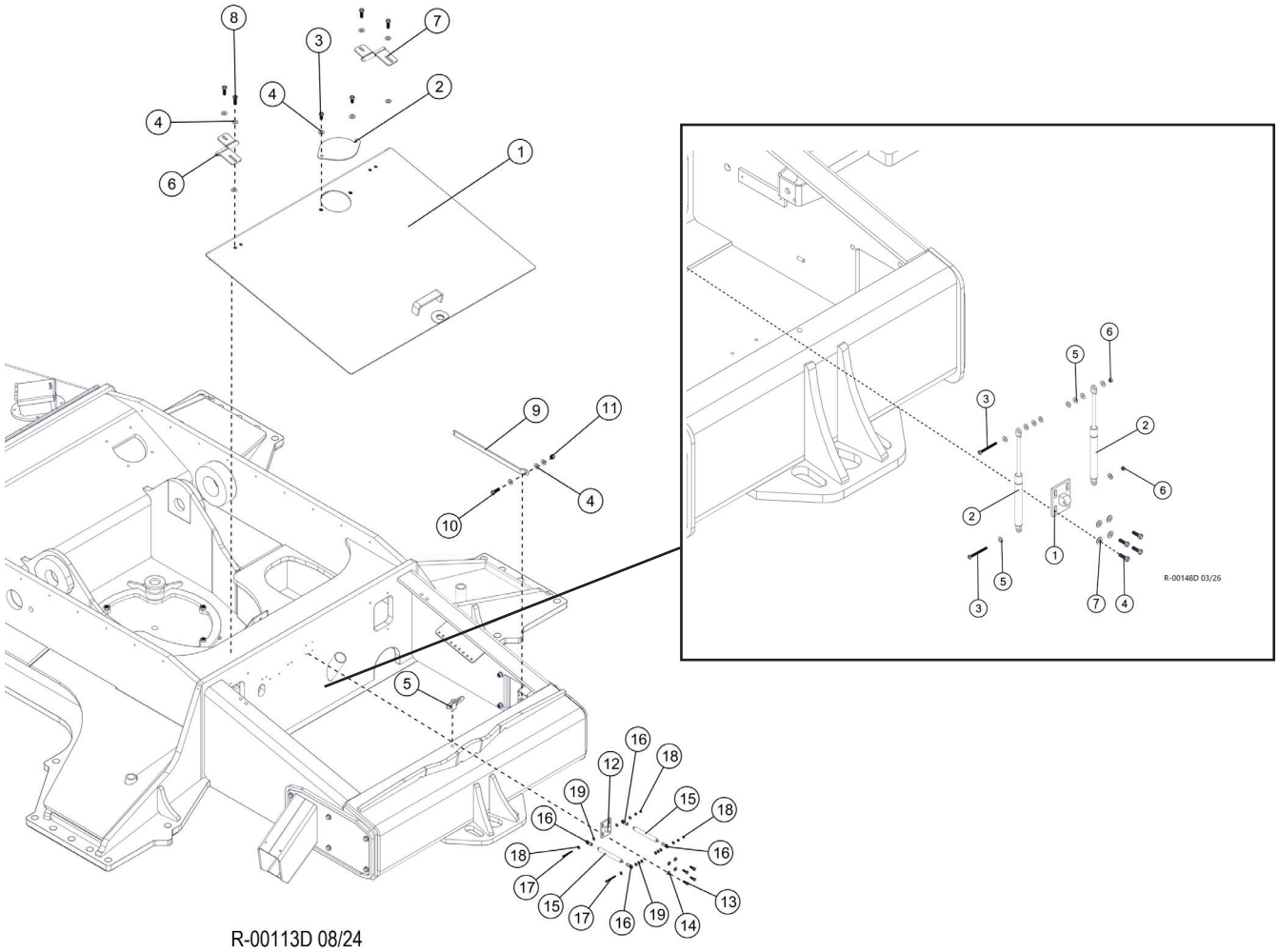

Item	Part #	Description	Qty.
1	603450	LID, TRUNK LEVELING T/M BRACED	1
2	12150	COVER, ACCESS - RAD FILL / STEER CYL	1
3	10783	BOLT - .5” X 1”	2
4	10804	WASHER, FLAT - .5”	11
5	19771	LATCH, CAM - SHORT (PUMP GUARD)	1
6	59118	HINGE ASSY, 1 BOLT, lH	1
7	59119	HINGE ASSY, 1 BOLT, RH	1
8	50100	BOLT - .5” X 1.25”	4
9	52619	ROD, PROP - TOOL BOX LID	1
10	10739	BOLT - .5” X 1.5”	1
11	10815	NUT, LOCK - .5”	1
12	54059	BRACKET, TRUNK GAS SPRING **S/N: UP TO 1261**	1
13	15589	BOLT - .3125” X 1”	4
14	10801	WASHER, FLAT - .3125”	4
15	57963	CYLINDER, GAS SHOCK **S/N: UP TO 1261**	2
16	54108	STUD, ROD END - GAS SPRING TRACK TRUCK **S/N: UP TO 1261**	4
17	58198	BOLT, M6 -1.00 x 60MM TRUNK SHOCK **S/N: UP TO 1261**	2
18	16117	NUT, HEX - 6MM **S/N: UP TO 1261**	4
19	10757	WASHER, SAE FLAT - .25” **S/N: UP TO 1261**	14
		S/N: 1261 & FORWARD	
1	540590	BRACKET, TRUNK GAS SPRING	1
2	695830	SHOCK, GAS, 325MM X 800N	2
3	10824	BOLT - .3125” X 2.5”	2
4	15589	BOLT - .3125” X 1”	4
5	15559	WASHER, SAE FLAT - .3125”	10
6	10812	NUT, LOCK - .3125	4
7	10801	WASHER, FLAT - .3125”	4

R200-00100 - LEVELING CENTER FRAME

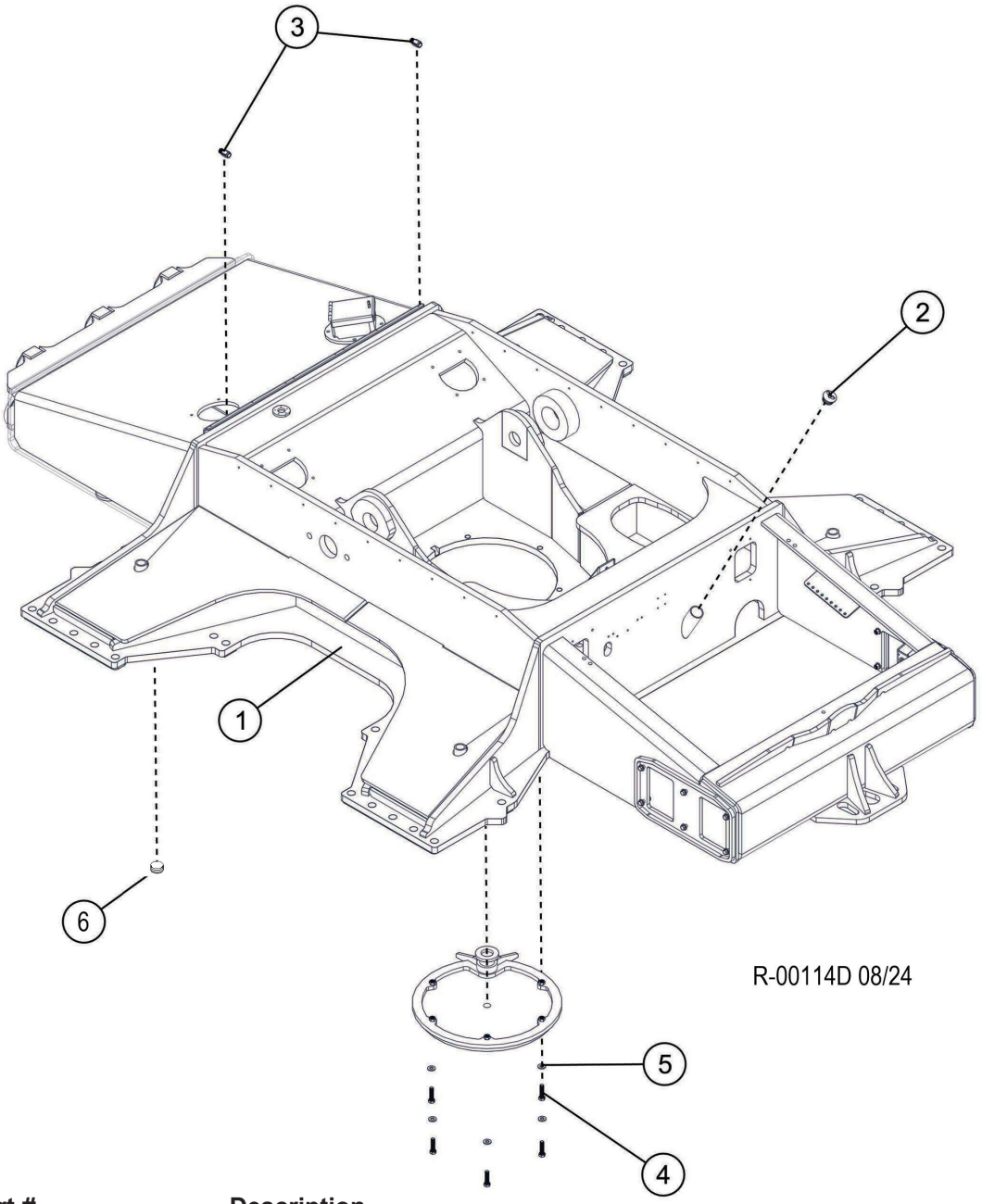

Item	Part #	Description	Qty.
1	48450	WELDMENT, TL765 CAR BODY COMPLETE	1
2	53728	CAP, EXPANDABLE - AUX OIL TANK (TRACK)	1
3	53885	VALVE, CHECK - FUEL TANK	2
4	15517	BOLT - .625” X 2.5”	5
5	10805	WASHER, FLAT - .625”	5

R200-00100 - 11’2” LVL TRUNK LID

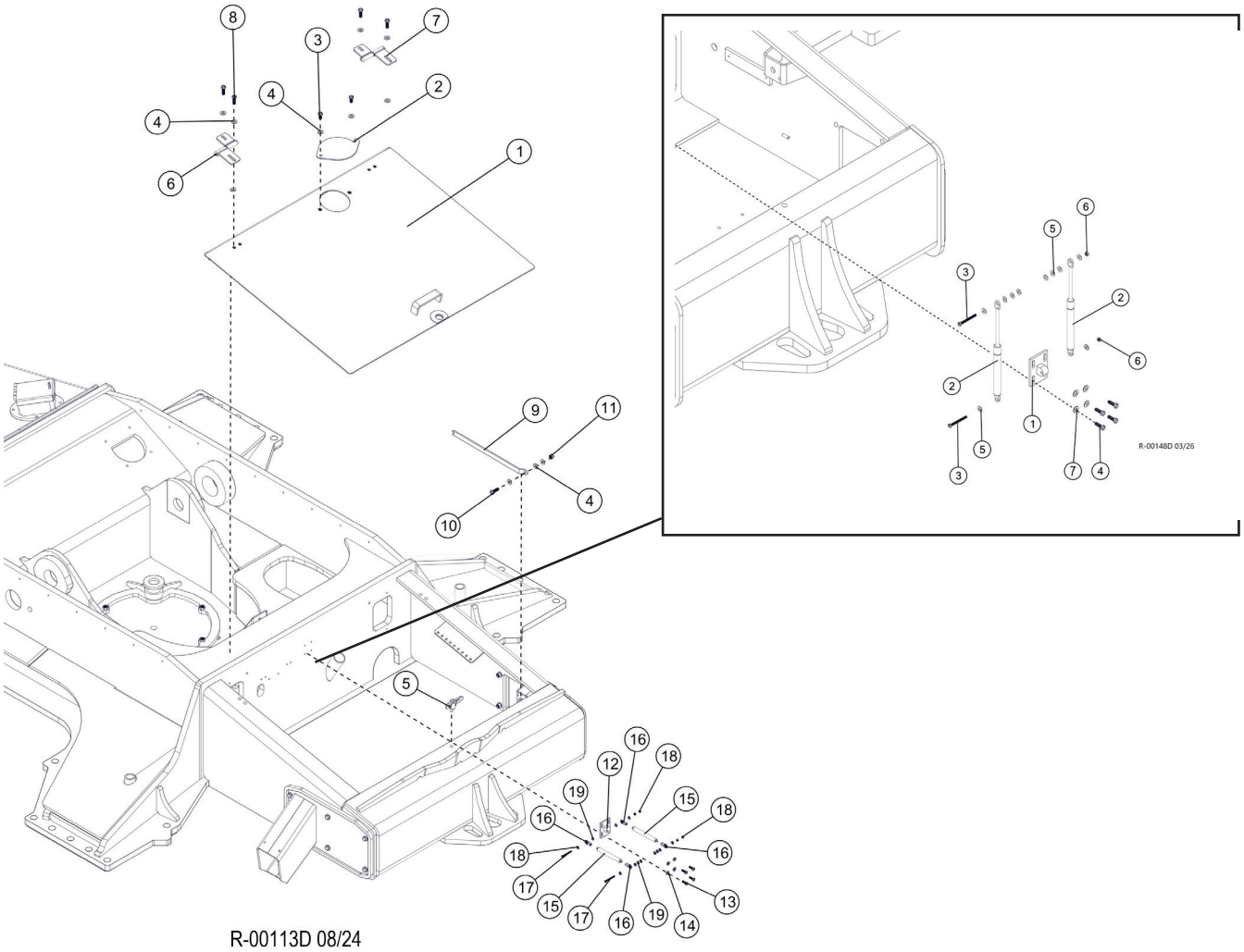

Item	Part #	Description	Qty.
1	603450	LID, TRUNK LEVELING T/M BRACED	1
2	12150	COVER, ACCESS - RAD FILL / STEER CYL	1
3	10783	BOLT - .5” X 1”	2
4	10804	WASHER, FLAT - .5”	11
5	19771	LATCH, CAM - SHORT (PUMP GUARD)	1
6	59118	HINGE ASSY, 1 BOLT, lH	1
7	59119	HINGE ASSY, 1 BOLT, RH	1
8	50100	BOLT - .5” X 1.25”	4
9	52619	ROD, PROP - TOOL BOX LID	1
10	10739	BOLT - .5” X 1.5”	1
11	10815	NUT, LOCK - .5”	1
12	54059	BRACKET, TRUNK GAS SPRING **S/N: UP TO 1261**	1
13	15589	BOLT - .3125” X 1”	4
14	10801	WASHER, FLAT - .3125”	4
15	57963	CYLINDER, GAS SHOCK **S/N: UP TO 1261**	2
16	54108	STUD, ROD END - GAS SPRING TRACK TRUCK **S/N: UP TO 1261**	4
17	58198	BOLT, M6 -1.00 x 60MM TRUNK SHOCK **S/N: UP TO 1261**	2
18	16117	NUT, HEX - 6MM **S/N: UP TO 1261**	4
19	10757	WASHER, SAE FLAT - .25” **S/N: UP TO 1261**	14
		S/N: 1261 & FORWARD	
1	540590	BRACKET, TRUNK GAS SPRING	1
2	695830	SHOCK, GAS, 325MM X 800N	2
3	10824	BOLT - .3125” X 2.5”	2
4	15589	BOLT - .3125” X 1”	4
5	15559	WASHER, SAE FLAT - .3125”	10
6	10812	NUT, LOCK - .3125	4
7	10801	WASHER, FLAT - .3125”	4

R200-00540 - TRACK FRAME 8.5P, 48L

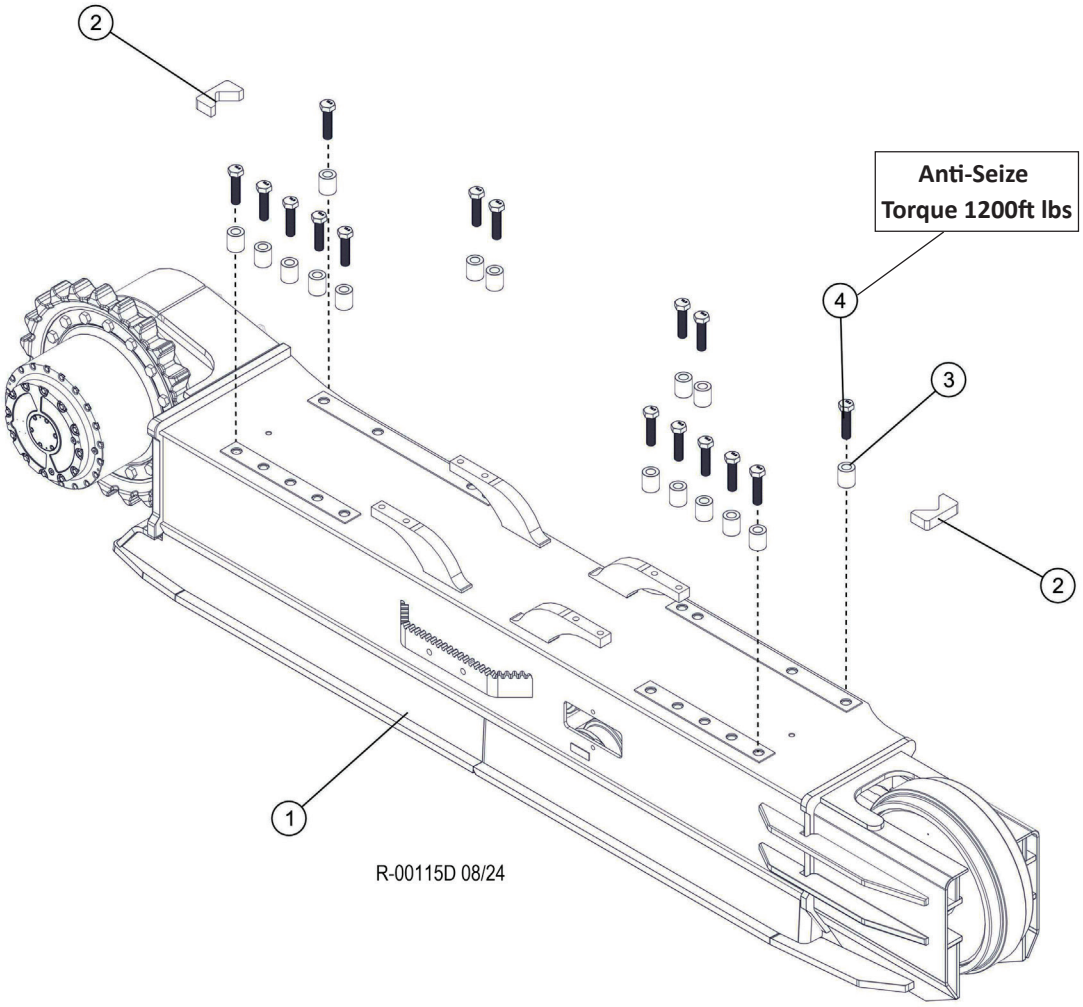

Item	Part #	Description	Qty.
1	55686	TRACK FRAME - CAT 330L/345 RECOIL W/O RA (NOTE: Includes Left & Right Sides)	1
2	43137	PLATE, LOCKING	4
3	12464	SPACER, BOLT - CARBODY (BRAATZ)	24
4	53139	BOLT - 30MM-3.5 X 160MM 12.9 **ANTI-SEIZE (TORQUE 1200FT LBS)**	24

R200-00540 - TRACK FRAME 8.5P, 51L

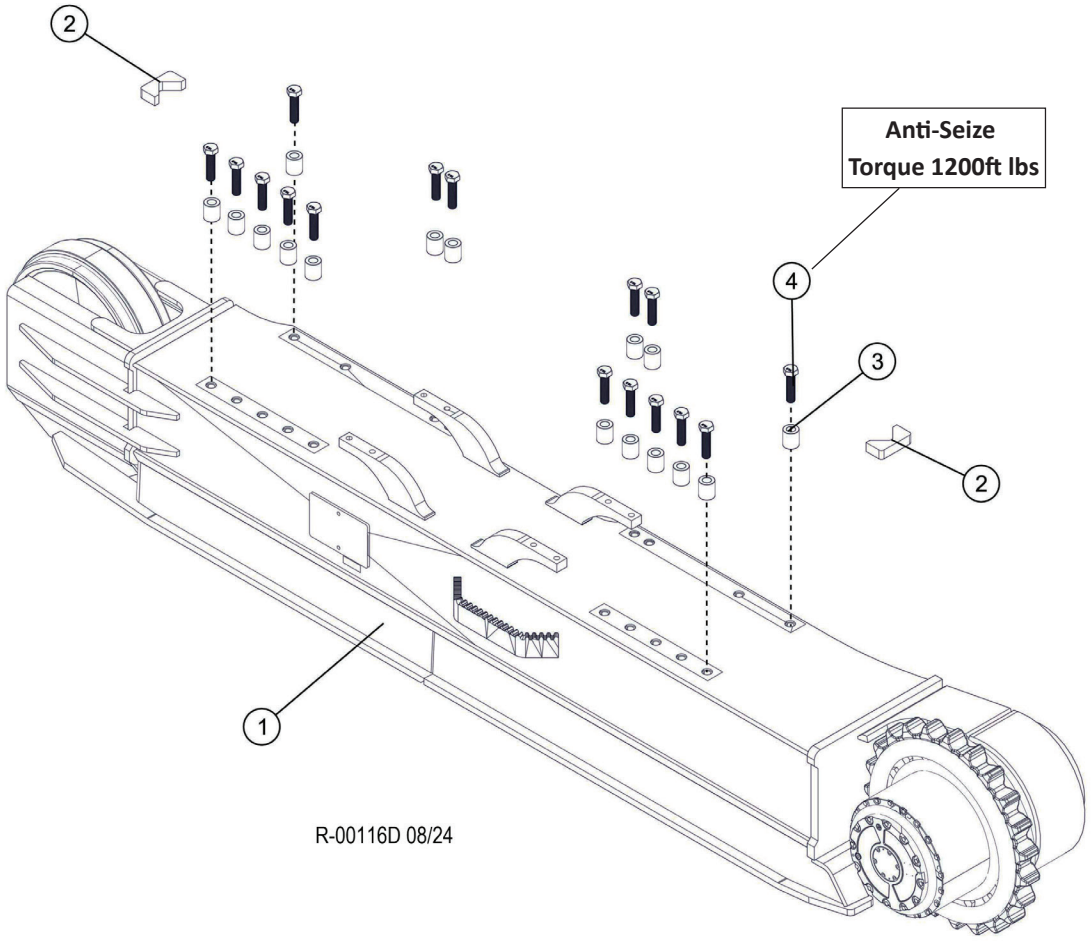

Item	Part #	Description	Qty.
1	57995	TRACK FRAME - CAT 330L/345 LONG FRAME (NOTE: Includes Left & Right Sides)	1
2	43137	PLATE, LOCKING	4
3	12464	SPACER, BOLT - CARBODY (BRAATZ)	32
4	53139	BOLT - 30MM-3.5 X 160MM 12.9 **ANTI-SEIZE (TORQUE 1200FT LBS)**	32

R100-00130 - TRACK ROLLER ASSEMBLY INSTALLATION (755)

BOTTOM ROLLER CONDITION (735 AND 745 LONG TRACK)

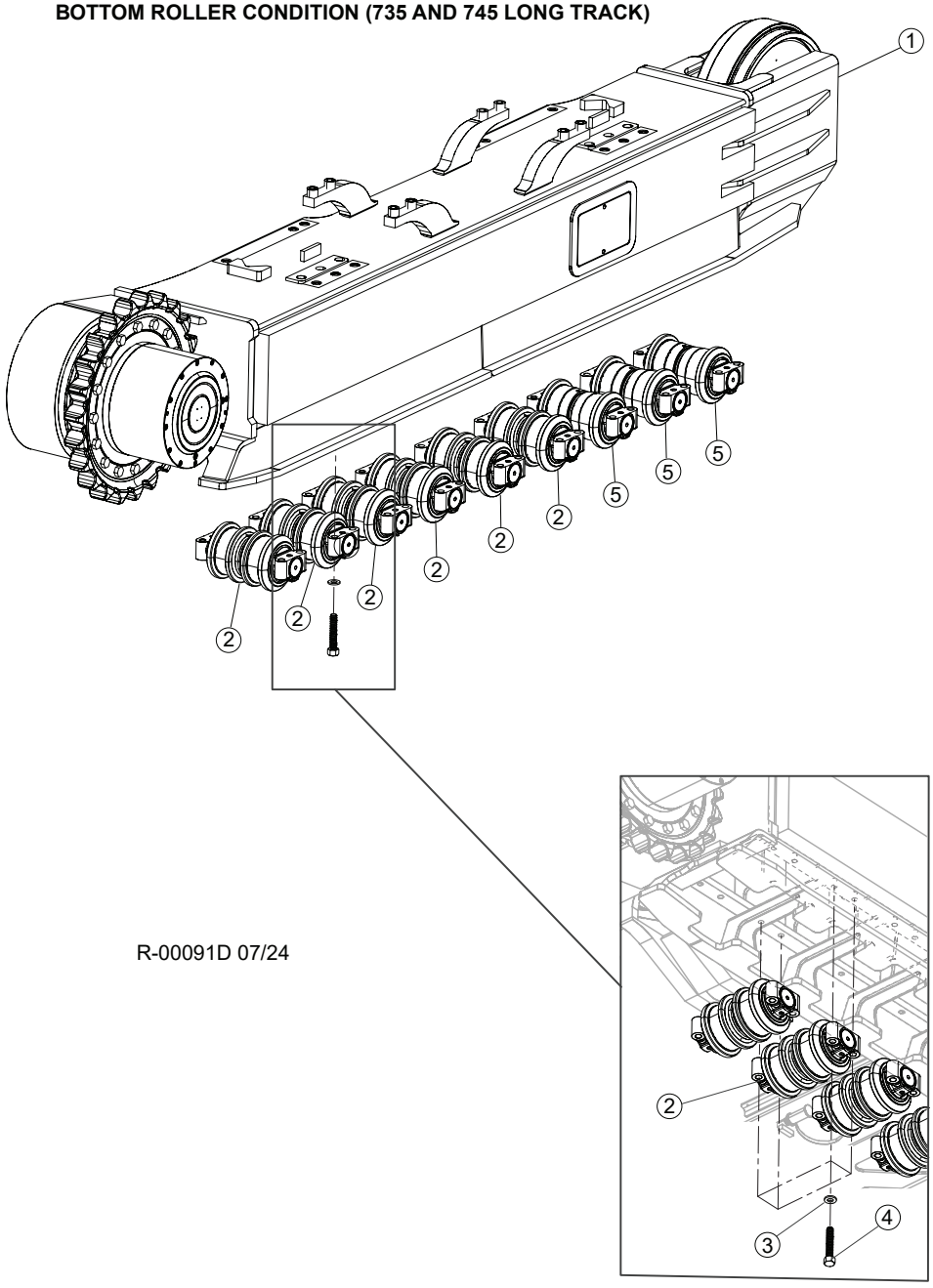

R-00091D 07/24

Item	Part #	Description	Qty.
1	53066	735D TRACK FRAME SET - CAT 330 (LEFT AND RIGHT (STANDARD)	1
-	55155	745D TRACK FRAME SET - CAT 330 LONG (LEFT AND RIGHT)	1
-	**SEE DESCRIPTION**	FRAME, RIGHT SIDE (CAT PART #: 299-4045)	1
-	**SEE DESCRIPTION**	FRAME, LLEFT SIDE (CAT PART #: 299-4046)	1
2	53689	ROLLER, BOTTOM DOUBLE FLANGE - 330	6
3	42110	WASHER, FLAT - 20MM	32
4	19923	BOLT - 20MM-2.5P X 100MM	32
5	53221	ROLLER, BOTTOM SINGAL FLANGE - 330	3

R-2233600-SP - TRACK FRAME LOWER ROLLERS - (755 WEST COAST)

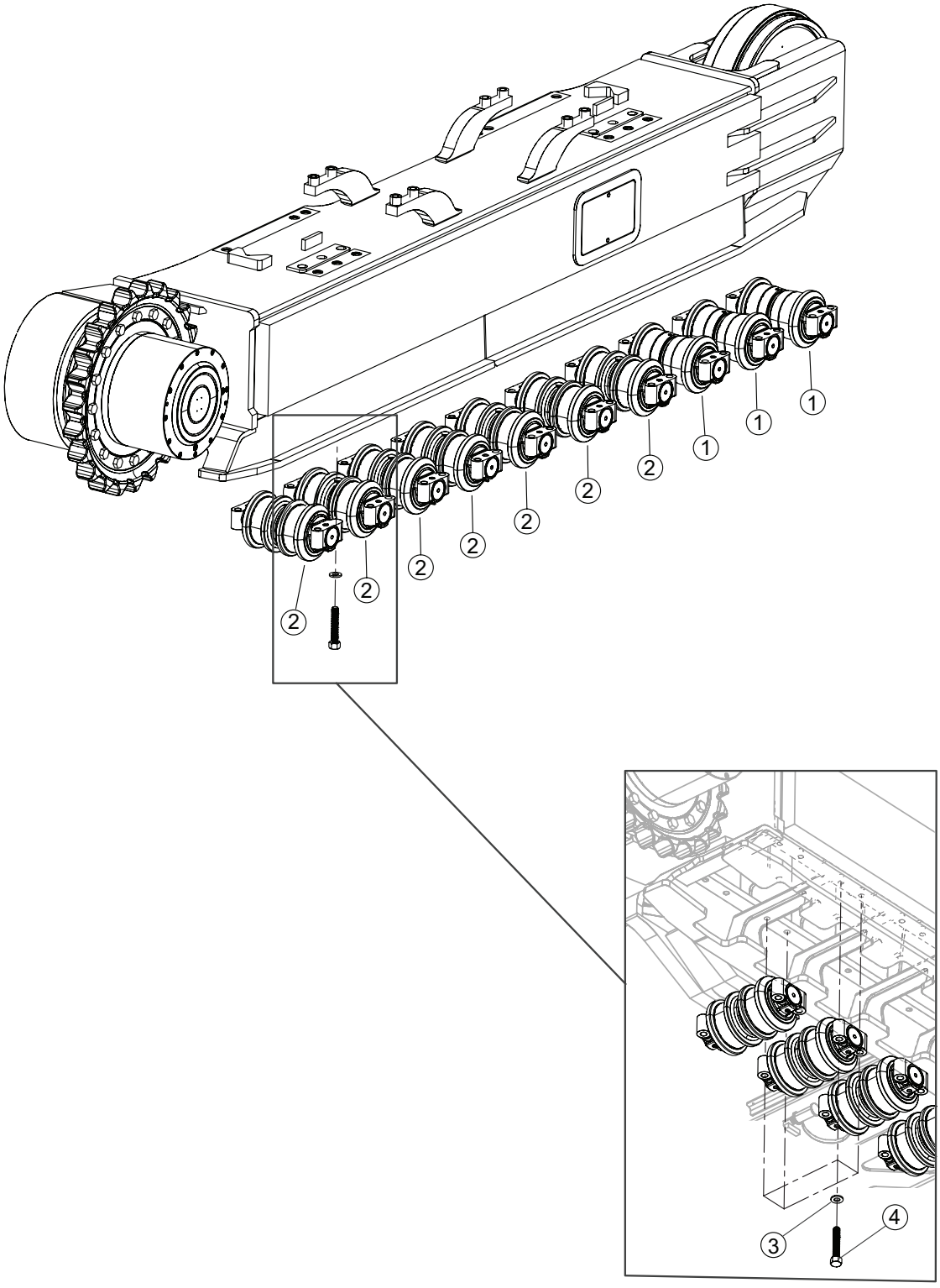

775-R-00006 07/25

R-2233600-SP - TRACK FRAME LOWER ROLLERS - (755 WEST COAST)

Item	Part #	Description	Qty.
1	53221	ROLLER, BOTTOM SINGAL FLANGE - 330	3
2	53689	ROLLER, BOTTOM DOUBLE FLANGE - 330	7
3	42110	WASHER, FLAT - 20MM	36
4	19923	BOLT - 20MM-2.5P X 100MM	36

R100-00530 - TRACK FRAME FRONT IDLER ASSEMBLY AND INSTALLATION (755 & 755 WEST COAST)

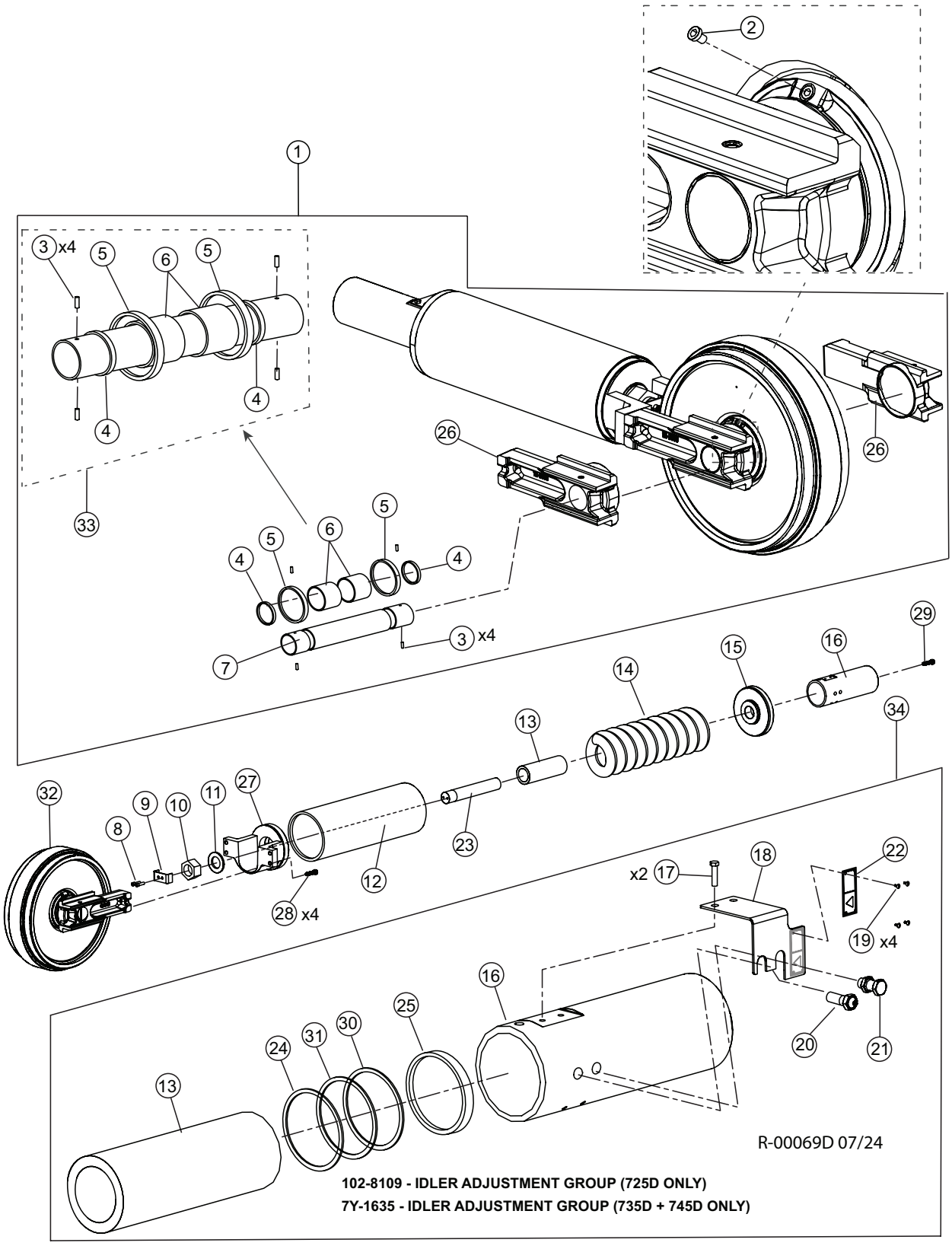

R100-00530 - TRACK FRAME FRONT IDLER ASSEMBLY AND INSTALLATION (755 & 755 WEST COAST)

Item	Part #	Description	Qty.
1	17873	FRONT IDLER ASSEMBLY	1
2	21492	PLUG	1
3	21520	PIN	4
4	21517	SEAL	2
5	57330	SEAL GP	2
6	6Y-2272	BEARING	6
7	21518	SHAFT	1
8	8T-9080	BOLT	2
9	7Y-1221	STRAP	1
10	7Y-1460	NUT	1
11	7Y-1459	WASHER	1
12	7Y-1878	SUPPORT	1
13	7Y-1867	PISTON	1
14	7Y-1874	SPRING	1
15	CALL	-	1
16	7Y-1866	CYLINDER	1
17	8T-4191	BOLT,	2
18	6I-6550	PLATE, INCLUDES **ITEM #19 AND #22**	1
19	6I-6550	SCREW	4
20	2S-5926	VATSE, relief	1
21	095-2927	VATSE, fill	1
22	6I-6550	PLATE-WARNING	1
23	7Y-1872	ROD	1
24	7Y-1884	RING, back up	2
25	093-1437	SEAL, lip type	1
26	21519-TS	BEARING	2
27	101-2620	SUPPORT	1
28	21461	BOLT	4
29	21459	BOLT	2
30	56450	SEAL, o-ring	2
31	56448	RING, back up	2
32	CALL	-	1
33	136-3874	IDLER AS	1
34	7Y-1635	IDLER ADJUSTMENT GROUP	1

R100-00530 - TRACK FINAL DRIVE ASSEMBLY AND INSTALLATION (755 & 755 WEST COAST)

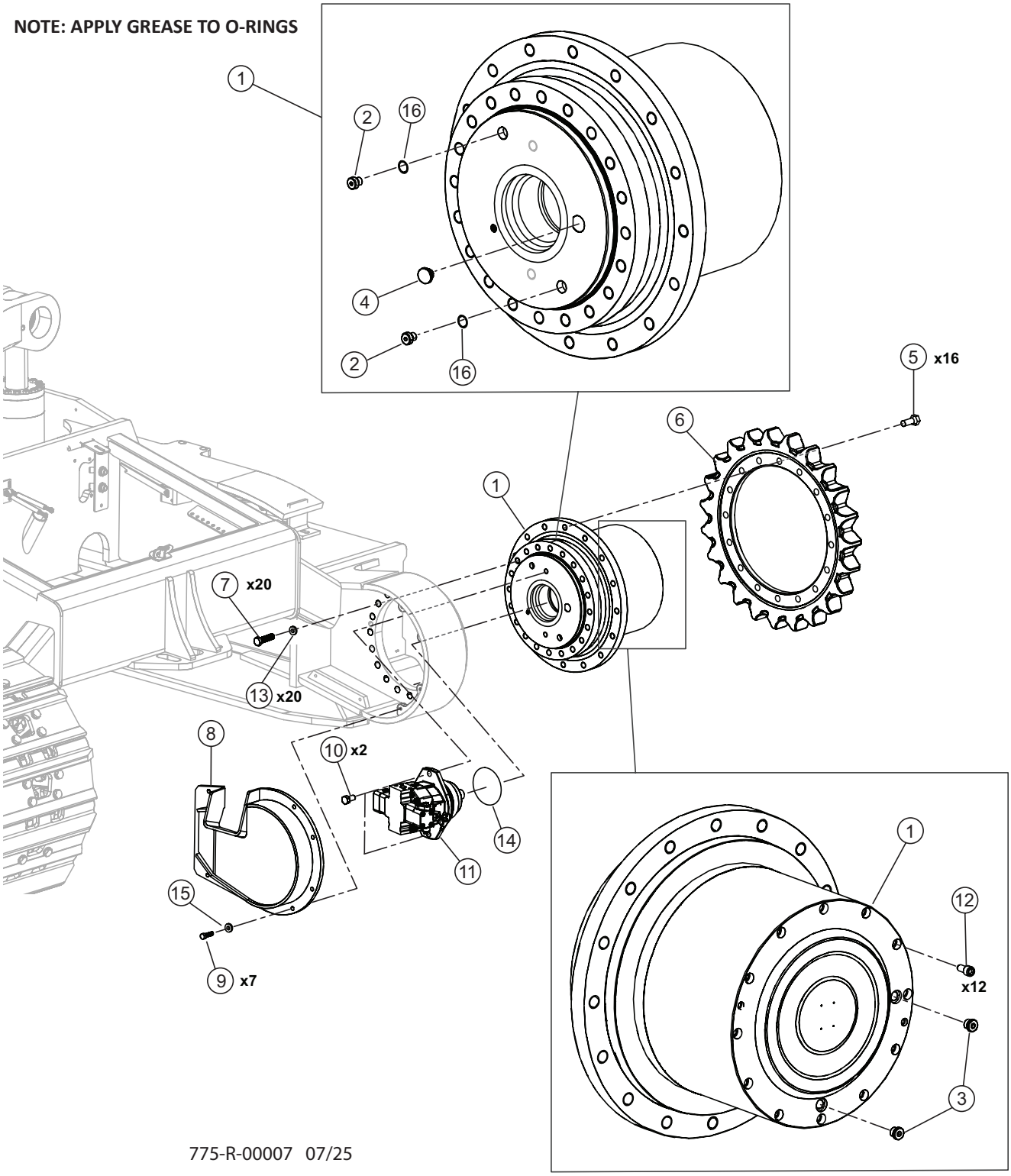

775-R-00007 07/25

R100-00530 - TRACK FINAL DRIVE ASSEMBLY AND INSTALLATION (755 & 755 WEST COAST)

Item	Part #	Description	Qty.
1	57701	FINAL DRIVE ASSY	1
2	21371	SCREW PLUG	3
3	21371	SCREW PLUG	2
4	NO P/N	CALL	1
5	21444	BOLT - 24MM (Torque to 660 ft lbs (900 Nm)) (see NOTE below)	16
6	21443	SPROCKET, FINAL DRVE (330)	1
7	24535	BOLT - 24MM (Torque to 660 ft lbs (900 Nm)) (see NOTE below)	20
8	17870	COVER, TRACK DRIVE MOTOR 735 + 745 - LH (T-PRO)	1
*	17871	COVER, TRACK DRIVE MOTOR 735 + 745 - RH (T-PRO)	1
9	18415	BOLT - 12MM-1.75P X 30MM	7
10	21383	BOLT - (Rexroth 16441363	2
11	57702	TRACK HYDRAULIC MOTOR	2
12	R900003402	HEXAGON SCREW	12
13	19926	WASHER - HARD 24MM x 80MM (Torque 660 ft lbs (900 Nm)) (See NOTE below)	20
14	21713	O-RING, Rexroth Motor, REXROTH PART #:16463252	2
15	18735	WASHER, FLAT - 12MM	7
16	21372	SEAL RING	3

(SEE PAGE) See referenced page for component or assembly breakdown.

NOTE: Use Loctite 272 (blue / medium) during installation.

R-2233600-SP - TRACK FINAL DRIVE COMPONENTS - (755 & 755 WEST COAST)

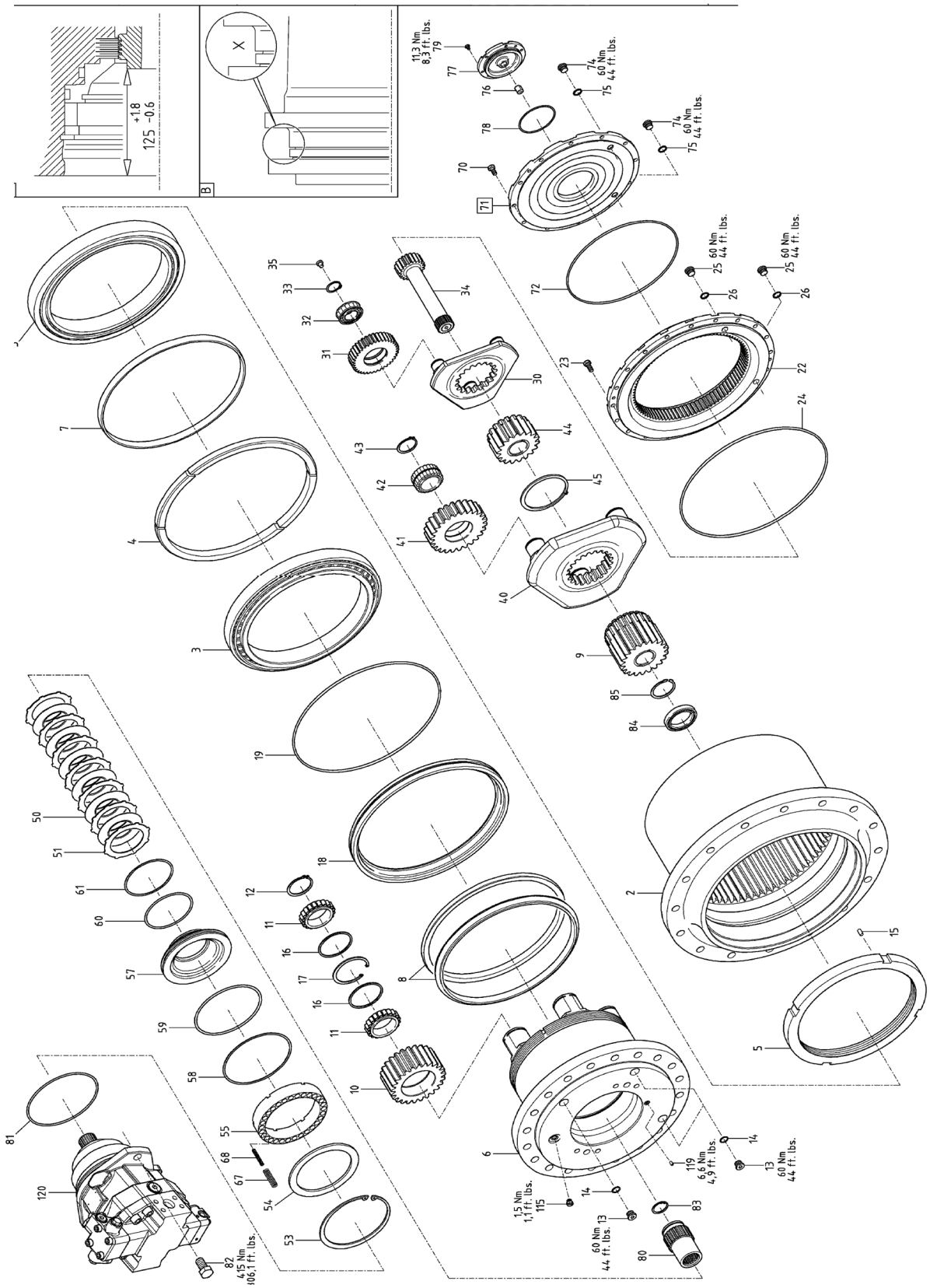

R-2233600-SP - TRACK FINAL DRIVE COMPONENTS - (755 & 755 WEST COAST)

Item	Part#	Qty	Description
1	57701	1	FINAL DRIVE ASSY. - 775 . GFT8190
2	R988085922	1	RING GEAR
3	R913035802	2	TAP.ROLLER BEAR.
4	R916015471	1	RING
5	R916015469	1	SHAFT NUT
6	R988085938	1	SPINDLE
7	R988084510	1	INTERMEDIATE RING
8	R916630875	1	SLIDE RING SEAL
9	R916015474	1	SUN GEAR
10	R988083532	5	PLANET GEAR
11	R916411705	10	ROLLER BEAR.
12	R916452048	5	RETAINING RING
13	R916444172	3	SCREW PLUG
14	R916462052	3	SEAL RING
15	R916448514	2	STRAIGHT PIN
16	R916462511	10	FRICTION WASHER
17	R916452262	5	RETAINING RING
18	R988080993	1	SEAL RING
19	R913035551	1	O-RING
22	R916015483	1	RING GEAR
23	R913018213	20	HEXAGON SCREW
24	R913035551	1	O-RING
25	R916444172	2	SCREW PLUG
26	R916462052	2	SEAL RING
30	R916015481	1	PLANET CARRIER
31	R916015478	3	PLANET GEAR
32	R913036543	3	CYL. ROLLER BEAR.
33	R916452031	3	RETAINING RING
34	R916015479	1	SUN GEAR SHAFT
35	R916015537	3	SPACER PIN
40	R916015482	1	PLANET CARRIER
41	R916015477	3	PLANET GEAR
42	R916411718	3	CYL. ROLLER BEAR.
43	21347	3	RETAINING RING
44	R916015476	1	SUN GEAR
45	R916452076	1	RETAINING RING
50	R916103250	6	INNER DISK
51	R916015498	7	OUTER DISK
53	R916452310	1	RETAINING RING
54	R988080203	1	WASHER
55	R916015310	1	INTERMEDIATE RING
57	R988080204	1	PISTON
58	R913035482	1	THRUST RING
59	R913021152	1	O-RING
60	R913035480	1	O-RING
61	R913035483	1	THRUST RING
67	R916423336	29	COMPRESSION SPRING
68	R916423337	29	COMPRESSION SPRING
70	R900003402	12	HEXAGON SCREW
71	R916017063	1	FLANGE
72	R913021818	1	O-RING
74	21371	2	SCREW PLUG
75	21372	2	SEAL RING
76	R916930466	1	CYLINDRICAL ROLLER
77	R988081990	1	COVER
78	R909086948	1	O-RING
79	R916441100	6	HEXAGON SCREW
80	R916015473	1	CARRIER
81	R913021178	1	O-RING
82	R916441363	2	HEXAGON SCREW
83	53405	1	RETAINING RING
84	701690	1	GROOVED BALL BEAR.
85	21412		RETAINING RING
120	R902150334	1	AXIAL-PISTON MOTOR .

Image 1

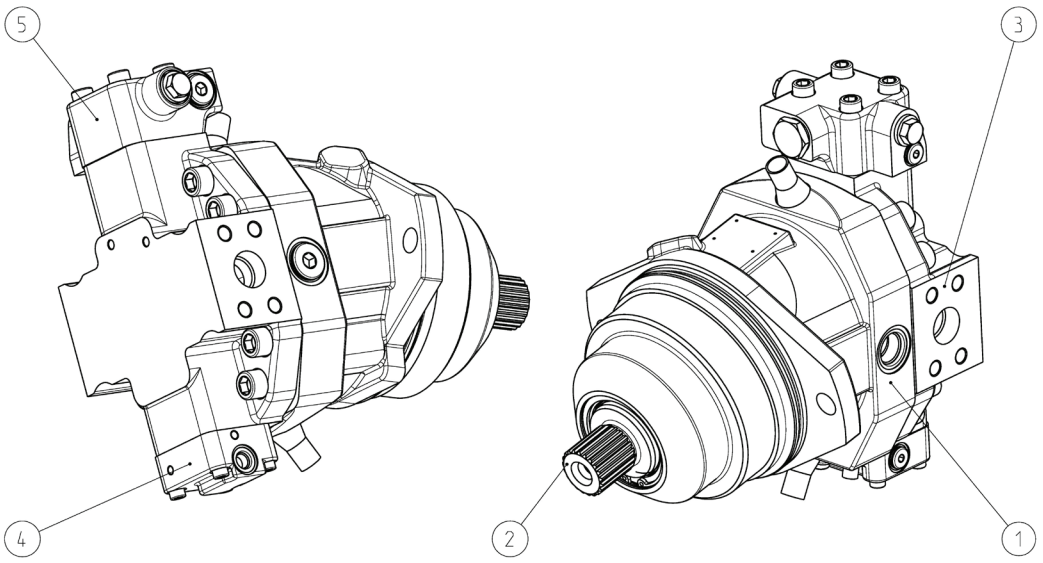

Image 2

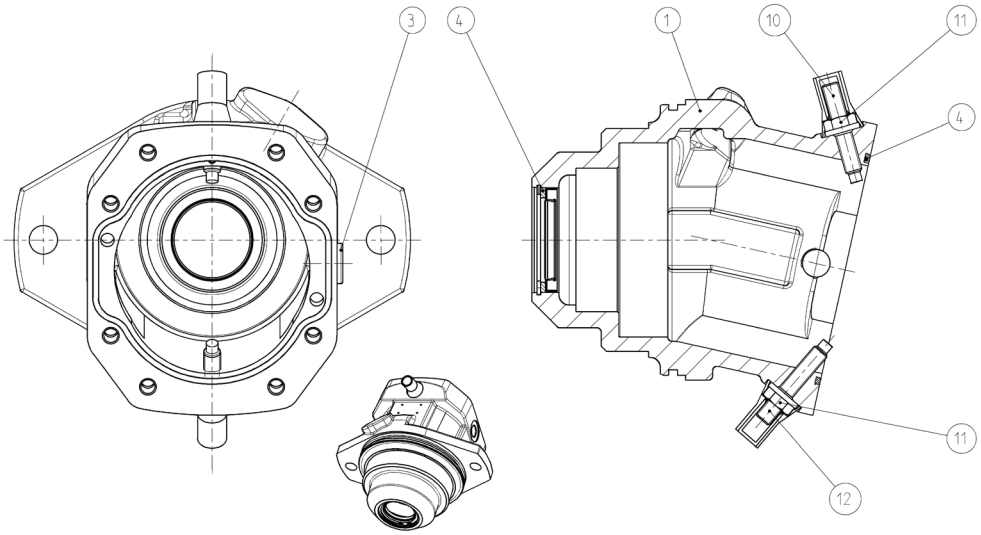

Image 3

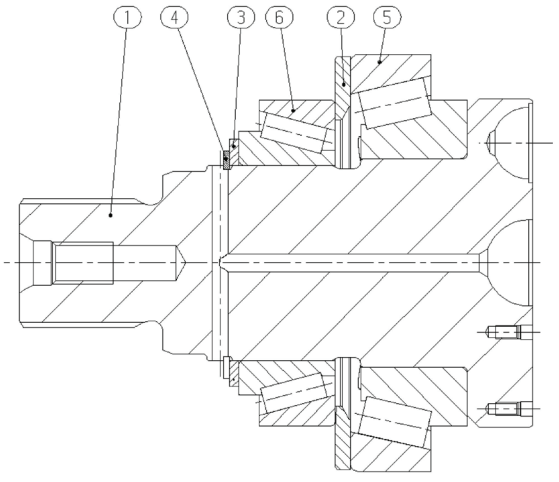

R-2233600-SP - TRACK DRIVE MOTOR COMPONENTS - (755 & 755 WEST COAST)

Image 1

Item	Part #	Description	Qty.
	57702	MOTOR, TRACK 775	1
1	R902230275	HOUSING WITH ACCESSORIES	1
2	R902149110	ROTARY GROUP	1
3	R902149167	PORT PLATE WITH ACCESSORIES	1
4	R902126908	CONTROL PART	1
5	R902224049	GMZUNS0055I6	1

Image 2

Item	Part #	Description	Qty.
	57702	MOTOR, TRACK 775	1
1	R902216055	HOUSING	1
3	R902601712	LOCKING SCREW	1
4	56349	SEAL KIT ROTARY GROUP	1
10	56349	THREADED PIN	1
11	R909152459	SEALING NUT	1
12	51987	THREADED PIN	1

Image 3

Item	Part #	Description	Qty.
	57702	MOTOR, TRACK 775	1
1	R902149112	DRIVE SHAFT	1
2	R909651524	SHIM	1
3	R902077202	BACK-UP PLATE	1
4	R909083369	RETAINING RING	1
5	R909154687	TAPERED-ROLLER BEARING	1
6	R909154688	TAPERED-ROLLER BEARING	1

R-2233600-SP - TRACK DRIVE MOTOR COMPONENTS - (755 & 755 WEST COAST)

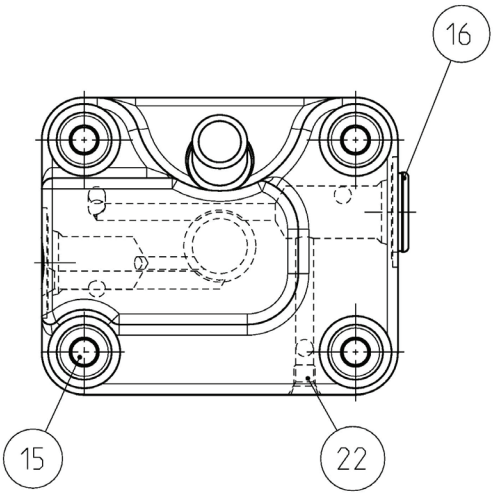

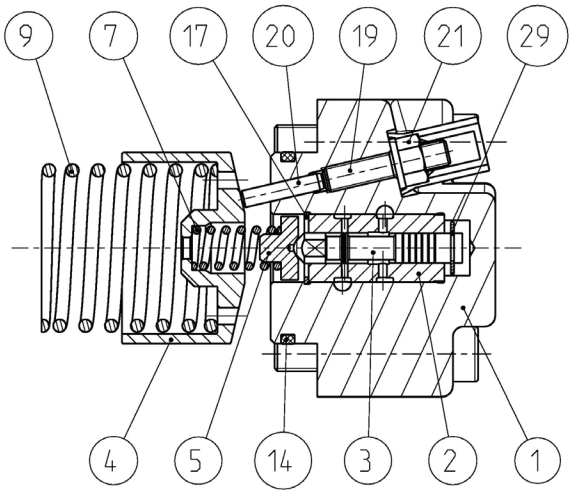

R-2233600-SP - TRACK DRIVE MOTOR COMPONENTS - (755 & 755 WEST COAST)

Item	Part #	Description	Qty.
1	R902209570	CONTROL HOUSING	1
2	R909417512	CONTROL BUSH	1
3	R902045455	CONTROL PISTON	1
4	R909651119	ADJUSTING BUSHING	1
5	R909921339	SPRING COLLAR	1
7	R909921419	PRESSURE SPRING	1
9	R909651117	PRESSURE SPRING	1
14	56357	O-RING 1 ST D	1
15	R909830176	SOCKET-HEAD SCREW	4
16	R909831482	LOCKING SCREW	1
17	R909083381	RETAINING RING	1
19	R909152427	THREADED PIN	1
20	R909087165	CYLINDER PIN	1
21	R909152425	SEALING NUT	1
22	R909831317	DOUBLE BREAK-OFF PLUG	1
29	R909085812	RETAINING DISC	1

Image 1

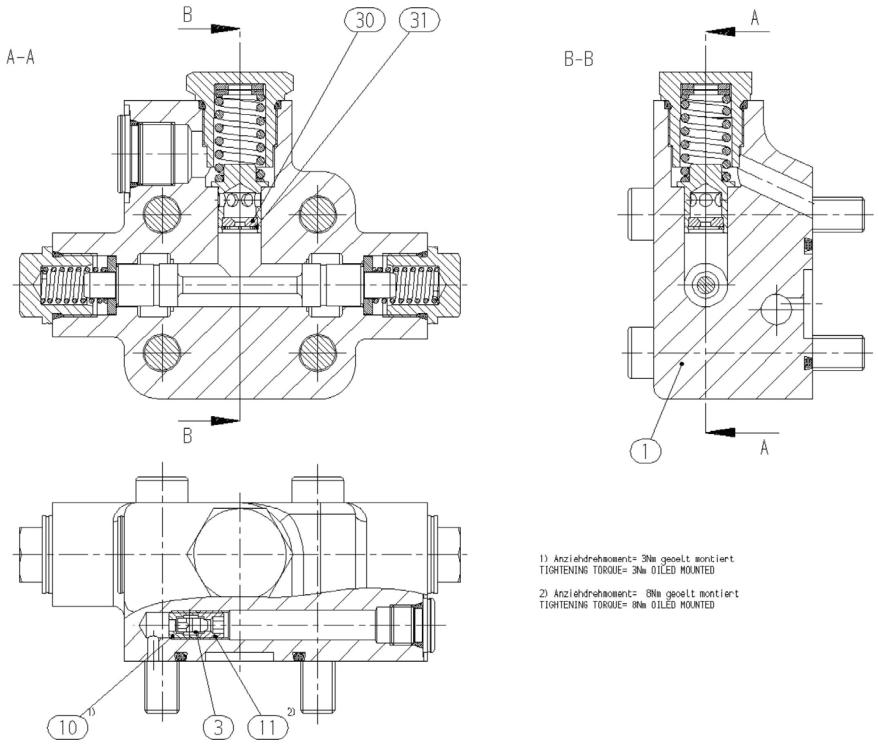

Image 2

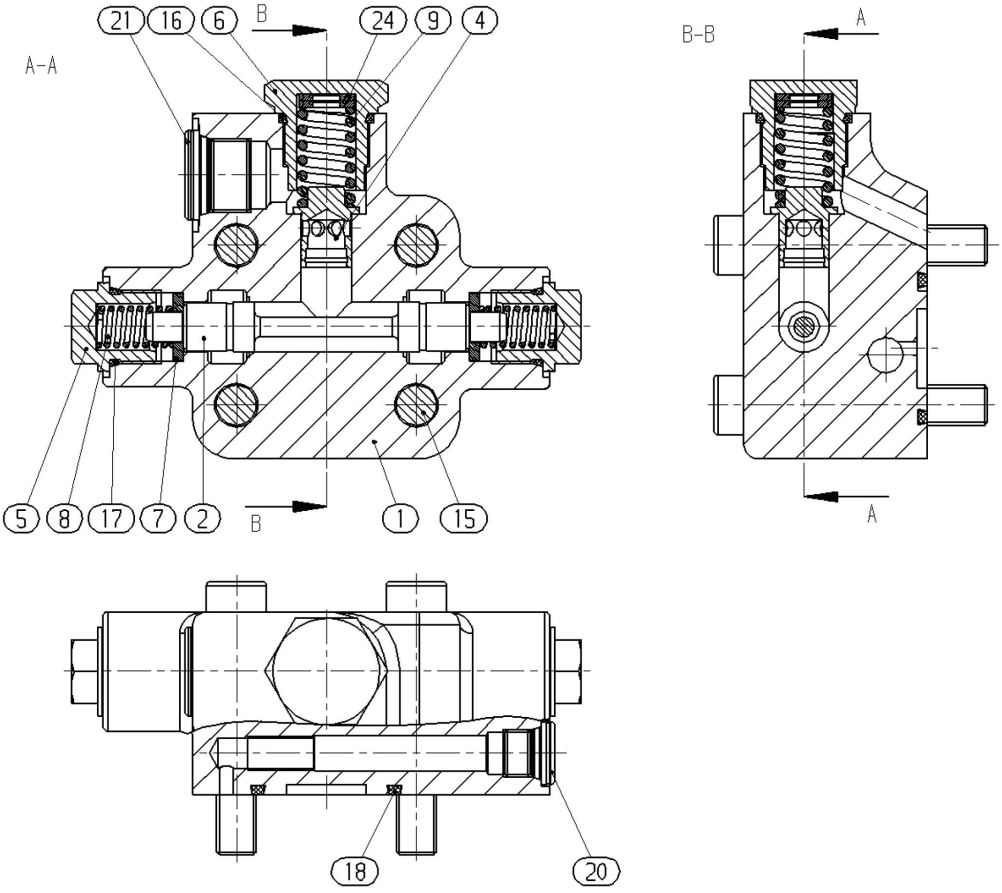

R-2233600-SP - TRACK DRIVE MOTOR COMPONENTS - (755 & 755 WEST COAST)

Image 1

Item	Part #	Description	Qty.
1	R902203710	FLUSH & BOOST PRESSURE VALVE W/O ORIF.	1
3	R909425868	THROTTLE PIN	1
10	R909400263	THROTTLE SCREW	1
11	R909400264	THROTTLE SCREWS	1
30	R909431309	ORIFICE	1
31	R909083379	RETAINING RING	1

Image 2

Item	Part #	Description	Qty.
1	R902126566	VALVE HOUSING	1
2	R902119990	FLUSHING PISTON	1
4	R902134982	VALVE PISTON	1
5	R902163788	LOCKING SCREW	2
6	R909435052	LOCKING SCREW	1
7	R902182251	SHIM	2
8	R902200059	PRESSURE SPRING	2
9	R909078142	PRESSURE SPRING	1
15	R909083099	SOCKET-HEAD SCREW	4
16	R909152694	O-RING	1
17	R902600738	O-RING	2
18	R909154053	O-RING	1
20	R909831482	LOCKING SCREW	1

R200-00100 - DEBRIS DEFLECTORS

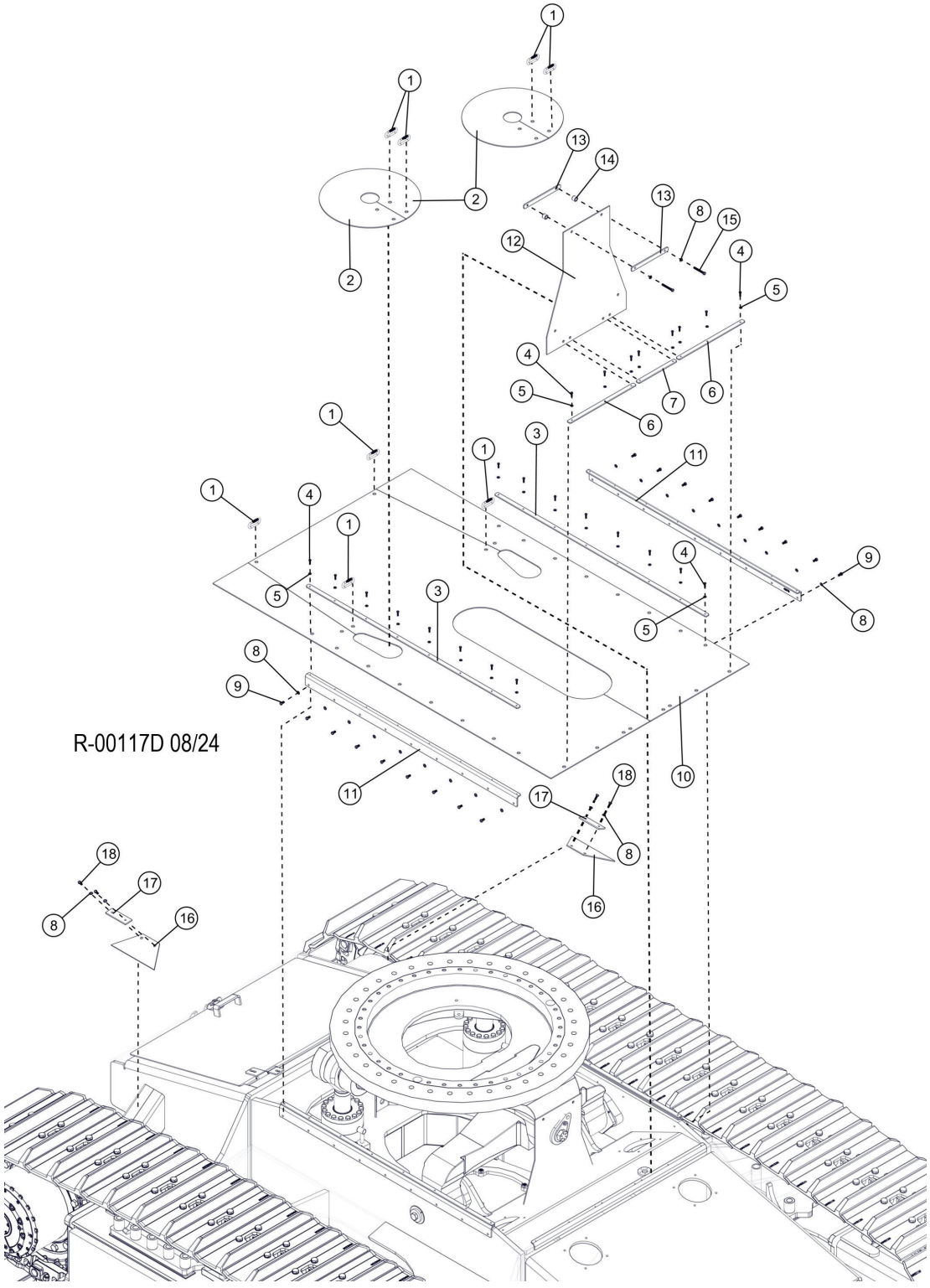

R200-00100 - DEBRIS DEFLECTORS

Item	Part #	Description	Qty.
1	18578	LINK, QUICK	8
2	53663	SKIRTING, LEVELING CYLINDER	2
3	48379	BAR, RETAINING SKIRTING SIDE	2
4	15576	BOLT - .25” X 1”	24
5	10757	1/4” FLAT WASHER	24
6	53234	BAR, RETAINER SKIRTING FRONT ENDS	2
7	53259	BAR, RETAINER SKIRTING FRONT CENTER	1
8	15528	WASHER, SAE FLAT - .375”	24
9	15542	BOLT - .375” X .75”	18
10	48395	SKIRTING, MAIN - FULL LENGTH	1
11	48378	ATTACHMENT, SKIRTING SIDE - 765	2
12	48436	SKIRTING, FRONT CASTING-TL765	1
13	53658	BAR, RETAINER	2
14	19219	SPACER	2
15	10750	BOLT - .375” X 3”	2
16	53622	BELTING, TRACK CHUTE COVER	2
17	20209	RETAINER, RUBBER STEP	2
18	11707	BOLT - .375” X 1”	4

R100-00660 - TRACK CHUTE U. 11’2” D7 LEVELING

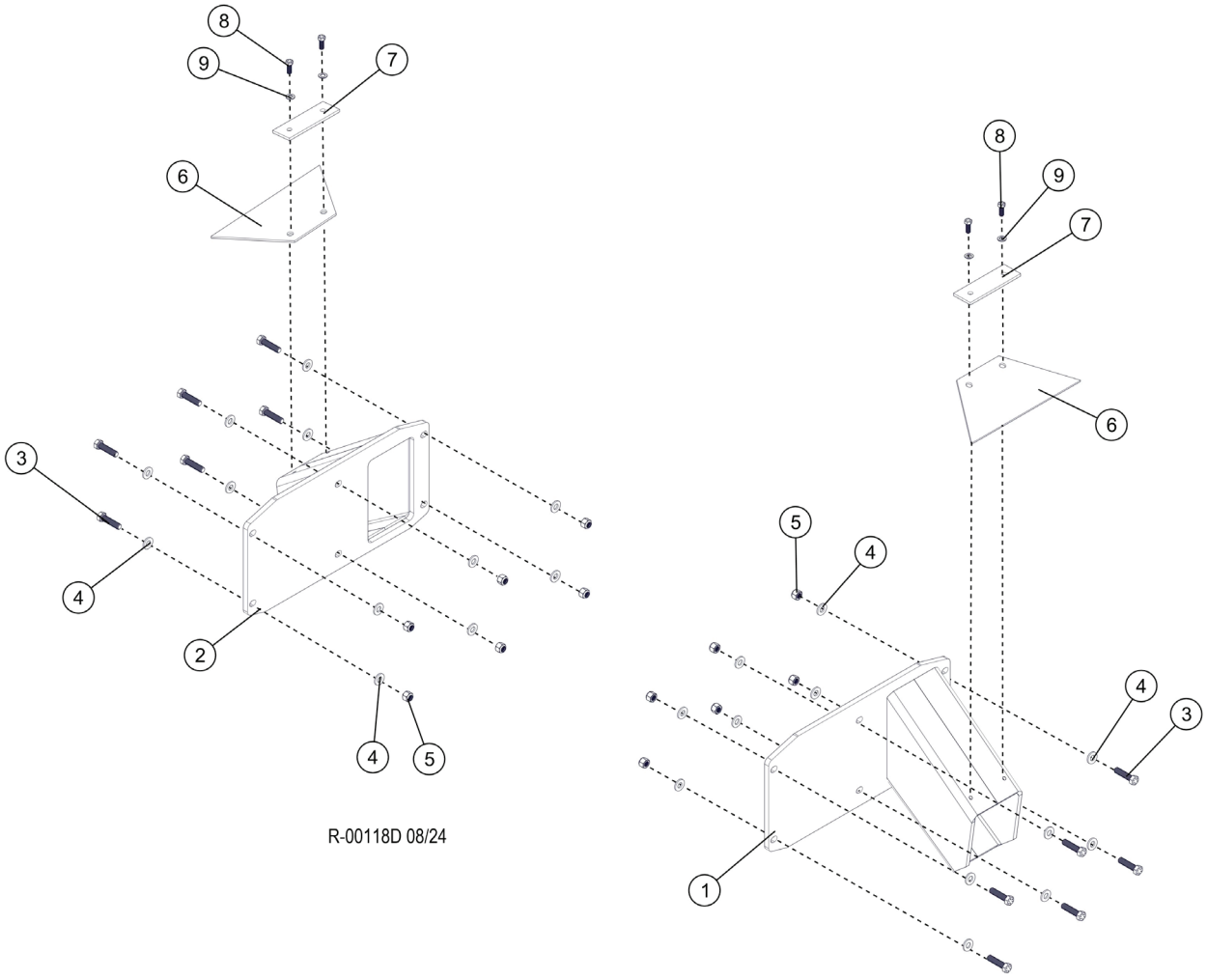

Item	Part #	Description	Qty.
1	62715	WELDMENT, TRACK CHUTE-755 - LH	1
2	62717	WELDMENT, TRACK CHUTE-755 - RH	1
3	10736	BOLT - .5” X 2”	12
4	15534	WASHER, SAE FLAT - .5”	24
5	10815	NUT, LOCK - .5”	12
6	53622	BELTING, TRACK CHUTE COVER	2
7	20209	RETAINER, RUBBER STEP	2
8	11707	BOLT - .375” X 1”	4
9	15528	WASHER, SAE FLAT - .375”	4

R200-00200 - LEVELING COMPONENTS

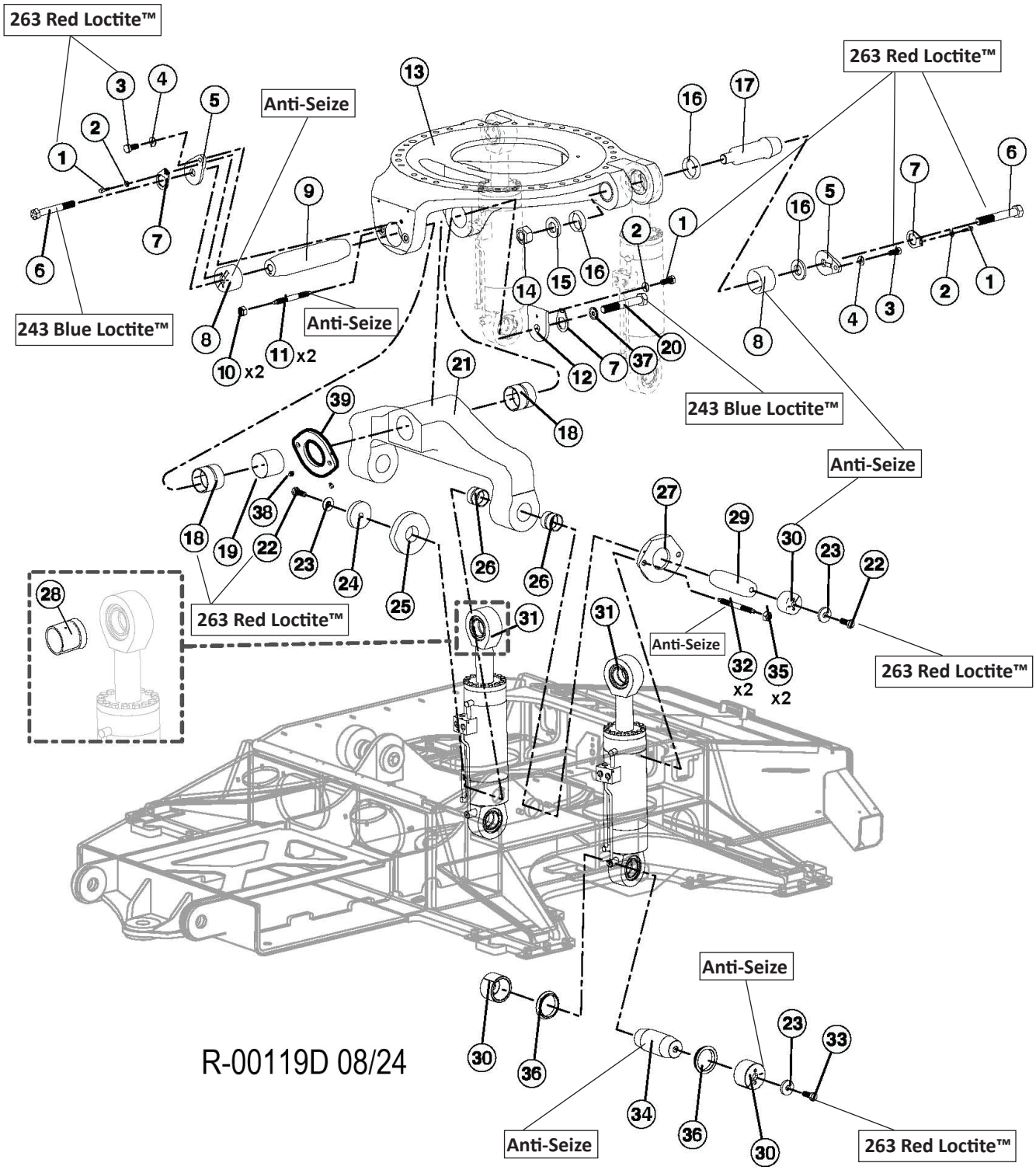

R200-00200 - LEVELING COMPONENTS

Item	Part #	Description	Qty.
1	10783	BOLT, 1/2-13 X 1" **263 RED LOCTITE™**	3
2	15534	WASHER, 1/2"	3
3	15549	BOLT, 3/4-10X2" **263 RED LOCTITE™**	2
4	15550	WASHER, .75	2
5	43742	EAR, PIN LOCK BASE	3
6	57976	BOLT - 1.5" - 12 UNF X 3.0" LEVELING **263 RED LOCTITE™**	2
7	43740	PIN LOCK, 2.25 HEX	4
8	52559	HUB, TAPER - 4.50"x 10 DEG **ANTI-SEIZE**	3
9	53853	PIN - 4.5" X 19.62" DBL TAPERED THD. +3"	1
10	15671	NUT, JAM - 1"	2
11	53714	SCREW, SET - 1" X 4.38" CHAMFERED END **ANTI-SEIZE**	2
12	43741	EAR, .75 THICK	1
13	46683	CASTING, MACHINED LOWER TURNTABLE	1
14	10728	NUT, NYLOCK - 2" (ZINC PLATED)	2
15	12021	WASHER, BURNED	2
16	46682	SPACER, 3.25" X 1.00" - LEVEL CYL.	2
17	46681	PIN, PIVOT 3.75" X 1.00" - LEVEL CYL	2
18	52523	BUSHING - 5.0" X 4.5" X 4.25" **263 RED LOCTITE™**	2
19	54532	SPACER, BUSHING - LEVELING YOKE T/M	1
20	57975	BOLT - 1.5" - 12 UNF X 2.5" LEVELING **243 BLUE LOCTITE™**	1
21	48170	CASTING, YOKE SUB ASSY	1
22	10733	BOLT - 1" X 3" **263 RED LOCTITE™**	2
23	52638	WASHER, BURNED - 1 1/16" X 3" X 1/2"	6
24	53764	WASHER, BURNED - 1.0" X 5.5" x 1"	2
25	43118	PLATE, DISK 1.75" THICK	1
26	48167	BUSHING - 3.75" X 3.25" X 3.0"	4
27	48159	PLATE, SLACK ADJUSTER	1
28	58993	BUSHING	2
29	48194	PIN, 3.50" X 11.44" DOUBLE TAPER 10 DEG.	2
30	48157	HUB, TAPER 3.5" - 10 DEG **ANTI-SEIZE**	4
31	57646	CYLINDER, LEVELING	2
32	48423	SCREW, SLACK ADJUSTING **ANTI-SEIZE**	2
33	15552	BOLT - 1" X 2.5" **263 RED LOCTITE™**	4
34	48156	PIN - 3.5" X 8.38" DOUBLE TAPER **ANTI-SEIZE**	2
35	57545	NUT, JAM - 1.25"- 7	4
36	48160	SPACER, 3.50" X .875" - LEVEL CYL.	4
37	59024	WASHER, FLAT - 1.5" LEVEL PIVOT/LL	2
38	21671	ELBOW, 45 - 5546134	1
39	52589	PLATE, SLACK ADJUSTMENT FRONT	1

R200-00201 - LEVELING CYLINDER COMPONENTS

NOTE: APPLY GREASE TO O-RINGS

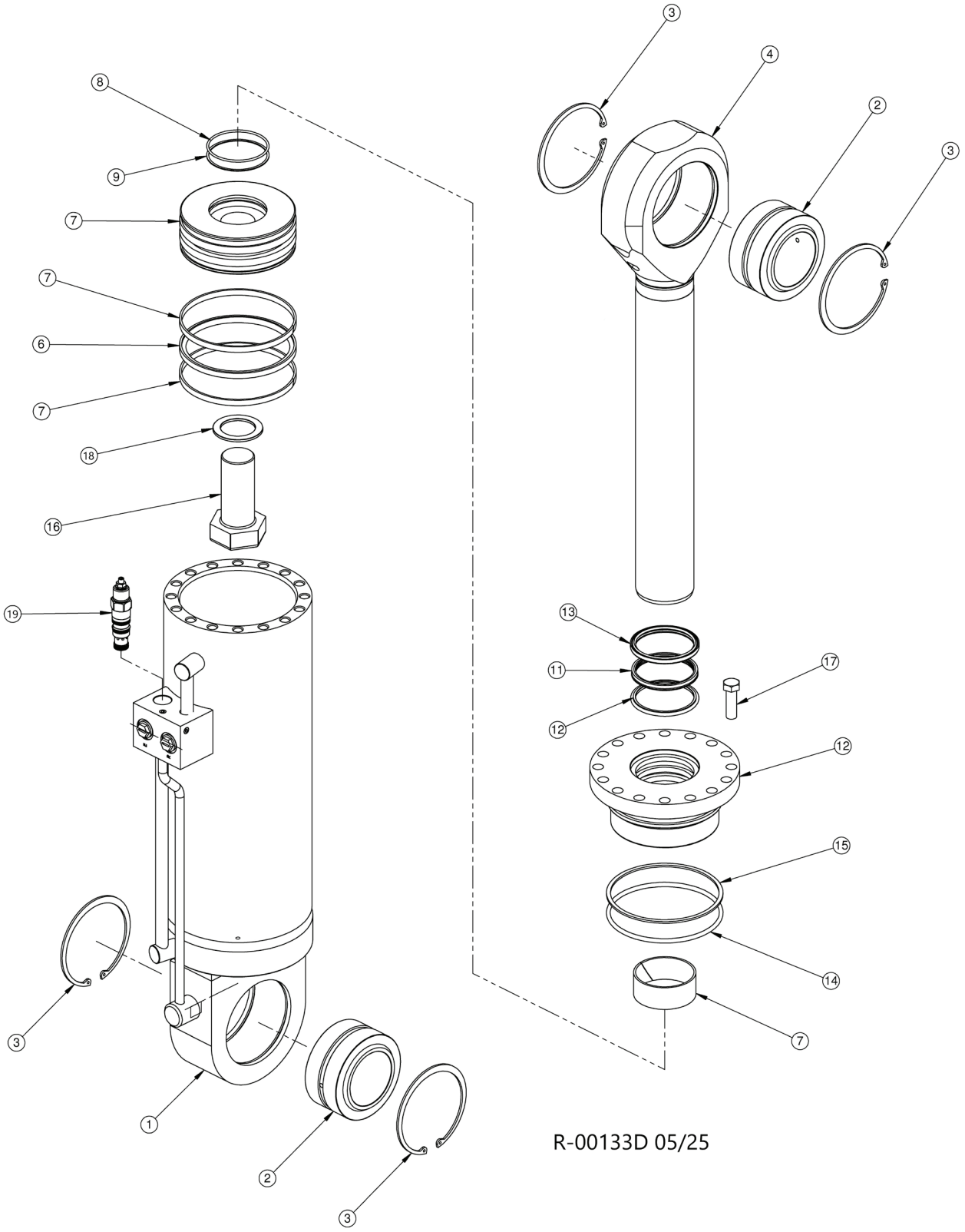

R-00133D 05/25

R200-00201 - LEVELING CYLINDER COMPONENTS

Item	Part #	Description	Qty.
	57646	CYLINDER, LEVELING - TL755/745/735/725	2
1	204100B	BARREL ASSEMBLY	1
2	720091A	3.50 SPHERICAL BEARING	2
3	716030A	5.50” SNAP RING	4
4	318243B	ROD ASSEMBLY	1
5	411479B	PISTON	1
6	700278A	PISTON SEAL	1
7	721RH035001500	WEAR RING,ROD	3
8	703238A	O-RING,-238,NITRILE,70A	1
9	704238A	BACKUP RING,-238,HYTREL	1
10	511491B	ROD BEARING	1
11	701199A	ROD SEAL	1
12	706118A	BUFFER SEAL	1
13	702180A	CANNED WIPER	1
14	703439A	O-RING,-439,NITRILE,70A	1
15	704439A	BACKUP RING,-439,HYTREL	1
16	19956	CAP SCREW (2.00-12 UNF)	1
17	711034A	.625-11 CAP SCREW	16
18	718032A	WASHER	1
19	55914	C’BAL,VBST-12U-RS@5000,T-2A	2

WORK EQUIPMENT - (T)

T100-00010 - MAIN BOOM - (HD) FELLER BUNCHER

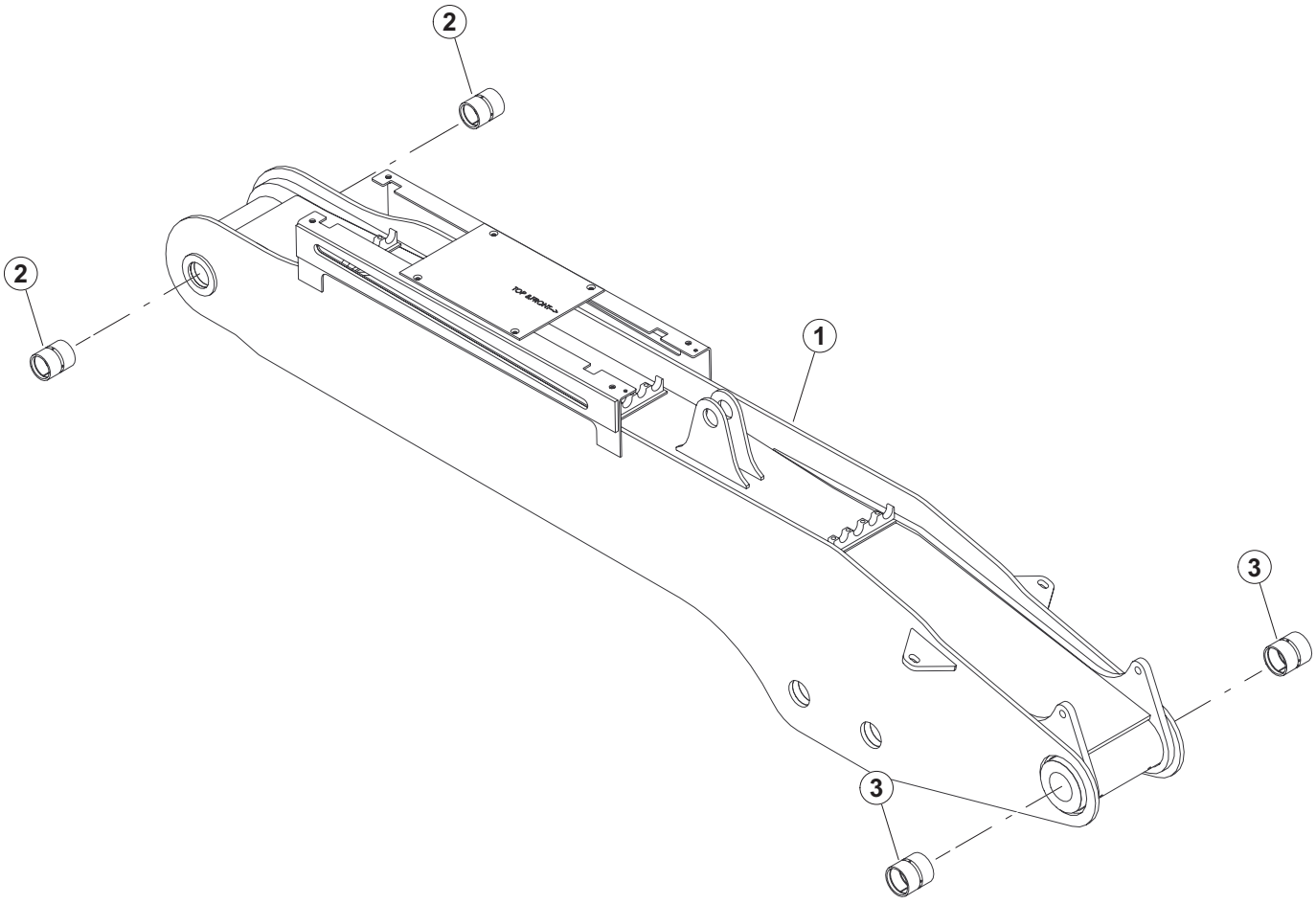

T-00001D 06/24

Item	Part #	Description	Qty.
1	60291-AST	WELDMENT, MAIN BOOM	1
2	424850	BUSHING - 3.5” X 3” X 4.25”	2
3	185640	BUSHING - 3.5” X 4.25”	2

T100-00020 - BOOM GUARDING - (HD) FELLER BUNCHER

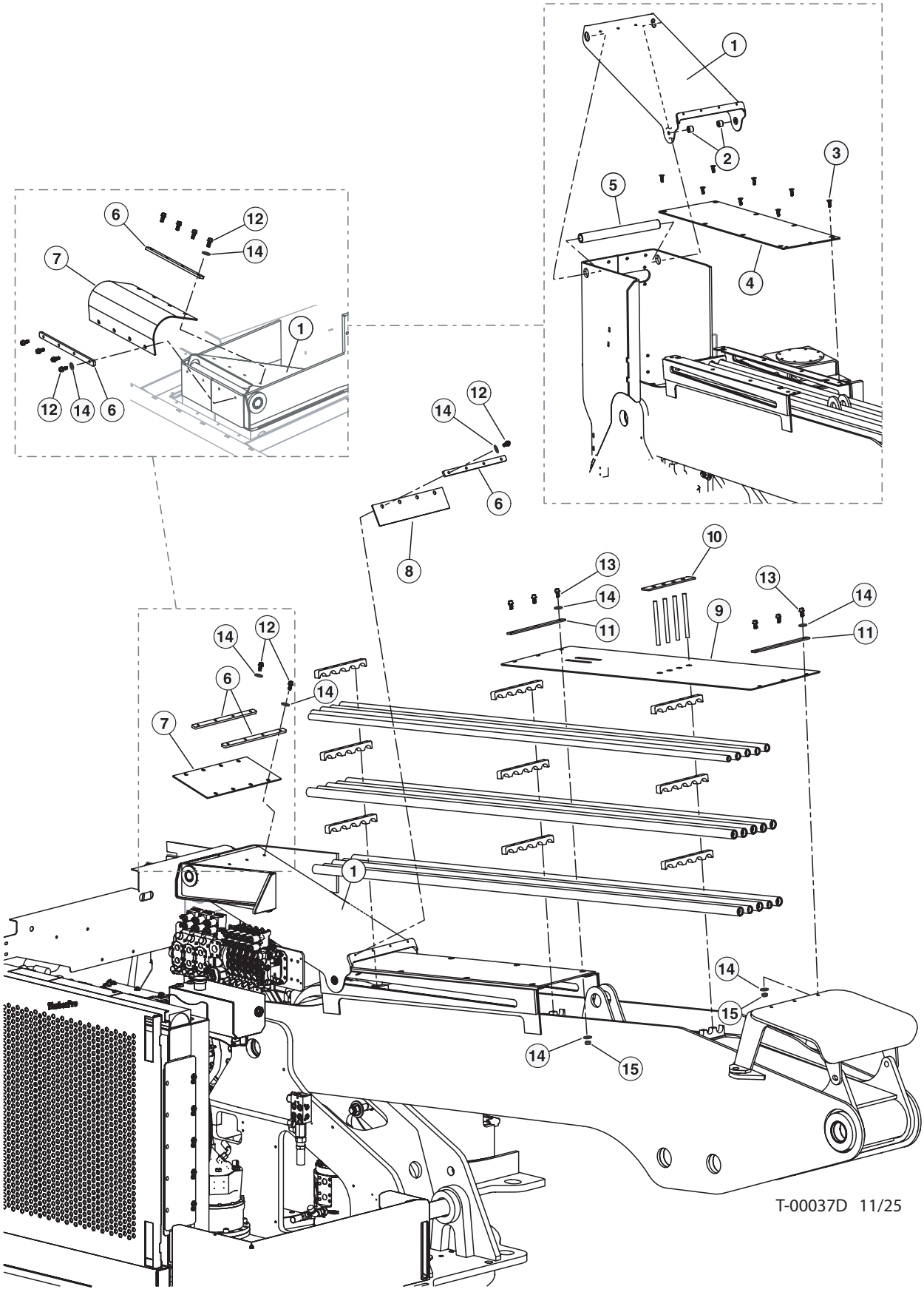

T100-00020 - BOOM GUARDING - (HD) FELLER BUNCHER

Item	Part #	Description	Qty.
1	60265	LID, DEBRIS GUARD - D-SERIES	1
2	60347	PUCK, DEBRIS GUARD SLIDE	2
3	62036	BOLT, FLAT HEAD -.5” X 1” DEBRIS GUARD	10
4	60289	PLATE, DEBRIS WEAR	1
5	60348	SHAFT, DEBRIS GUARD	1
6	60349	PLATE, RUBBER HOLD DOWN CHIMNEY	3
7	60478	RUBBER, REAR DEBRIS GUARD	1
8	60479	RUBBER, DEBRIS GUARD SCRAPPER	1
9	60466	BELTING, FB BOOM COVER D-SERIES	1
10	52824	PLATE, BELTING HOLD DOWN - BOOM COVER	1
11	42689	BAR, RUBBER RETAINER - BOOM	2
12	10402	BOLT - .375” X 1.25”	12
13	10731	BOLT - .375” X 1.5”	6
14	15528	WASHER, .375”	24
15	10813	3/8-16 NUT, TOP LOCK	6

T100-00030 - MAIN BOOM INSTALLATION - (HD) FELLER BUNCHER

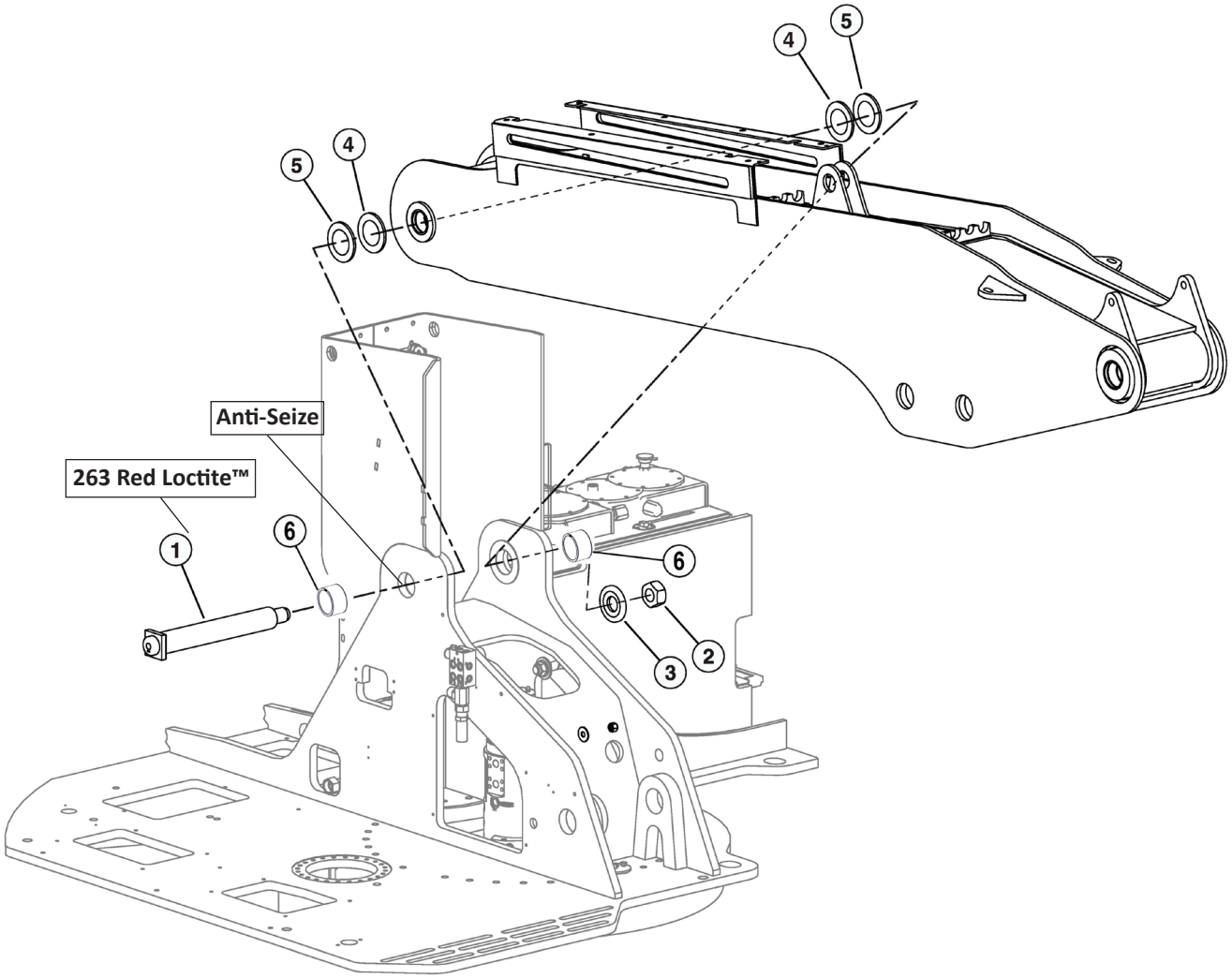

T-00004D 06/24

Item	Part #	Description	Qty.
1	54679	PIN ASSEMBLY, 2.99 DIA X 24.63" **263 RED LOCTITE™**	1
2	10728	NUT, NYLOCK - 2" (ZINC PLATED)	1
3	60758	WASHER, BURNED - HARDENED-MAIN BOOM PIN	1
4	47260	SHIM, BOOM PIVOT - .059	AR
5	47261	SHIM, BOOM PIVOT - .047	AR
6	60930	BUSHING, 4.00 OD X3.00 ID X 2.05 LG	2

T100-00040 - MAIN BOOM - HARVESTOR

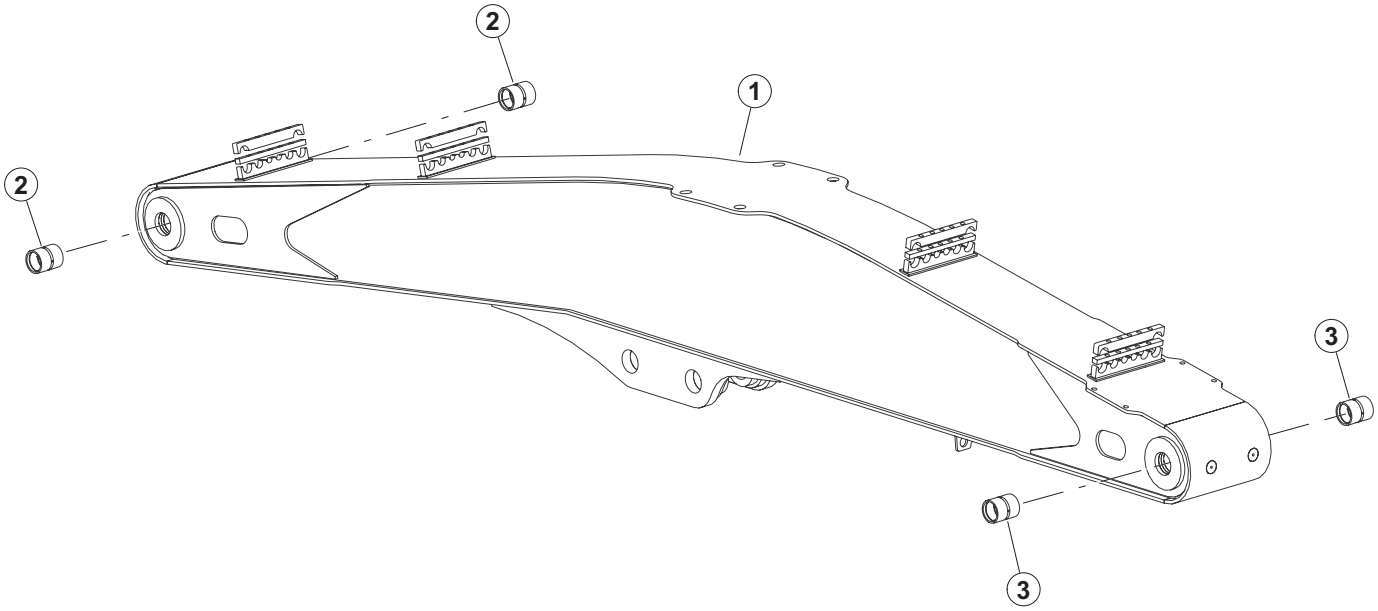

H-00007D 06/24

Item	Part #	Description	Qty.
1	47795	WELDMENT, MAIN BOOM HARVESTOR	1
2	42485	BUSHING - 3.5” X 3” X 4.25” UNDERSIZE	2
3	18564	BUSHING - 3.5” X 4.25” - UNDERSIZE	2

T1110-2239200 - MAIN BOOM - HARVESTOR - (4.00” BUSHING BORES)

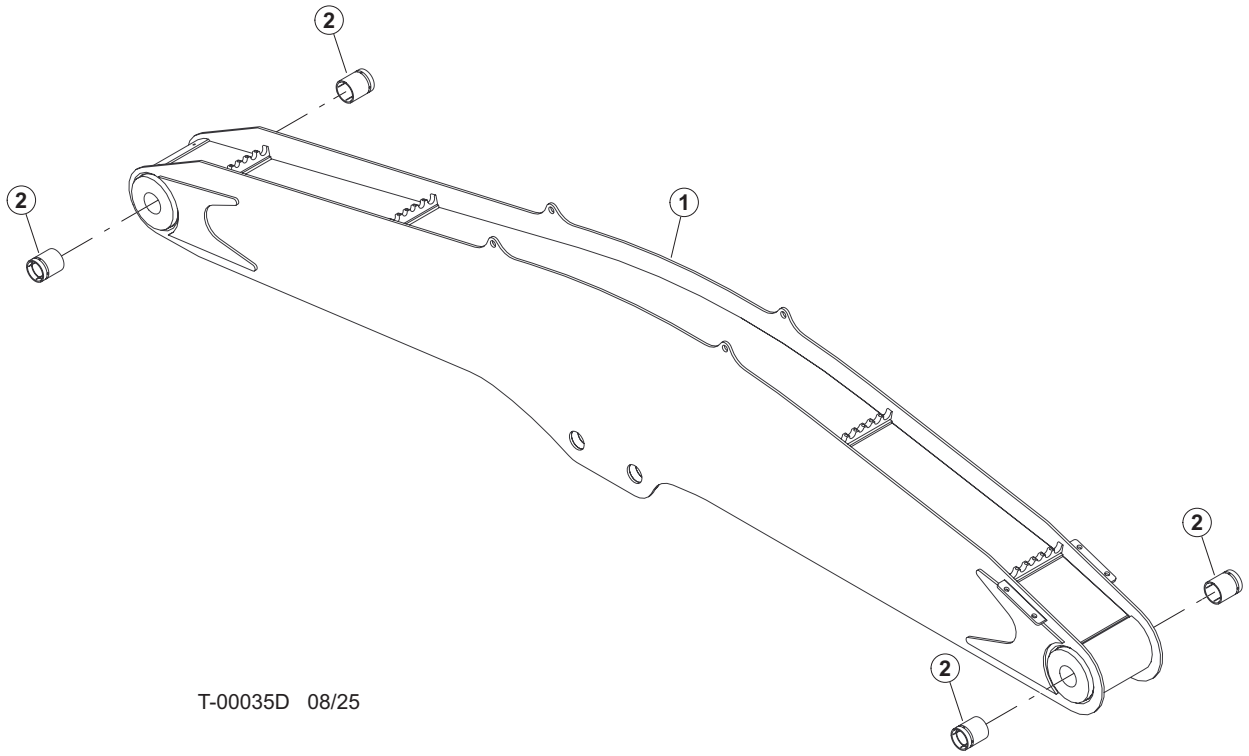

Item	Part #	Description	Qty.
1	617300	WELD, MAIN BOOM, HARV (745/755)	1
2	60824	BUSHING, 4.00 OD X 3.50 ID X 4.75 LG	4

T100-00050 - MAIN BOOM BOOM GUARDING - HARVESTOR

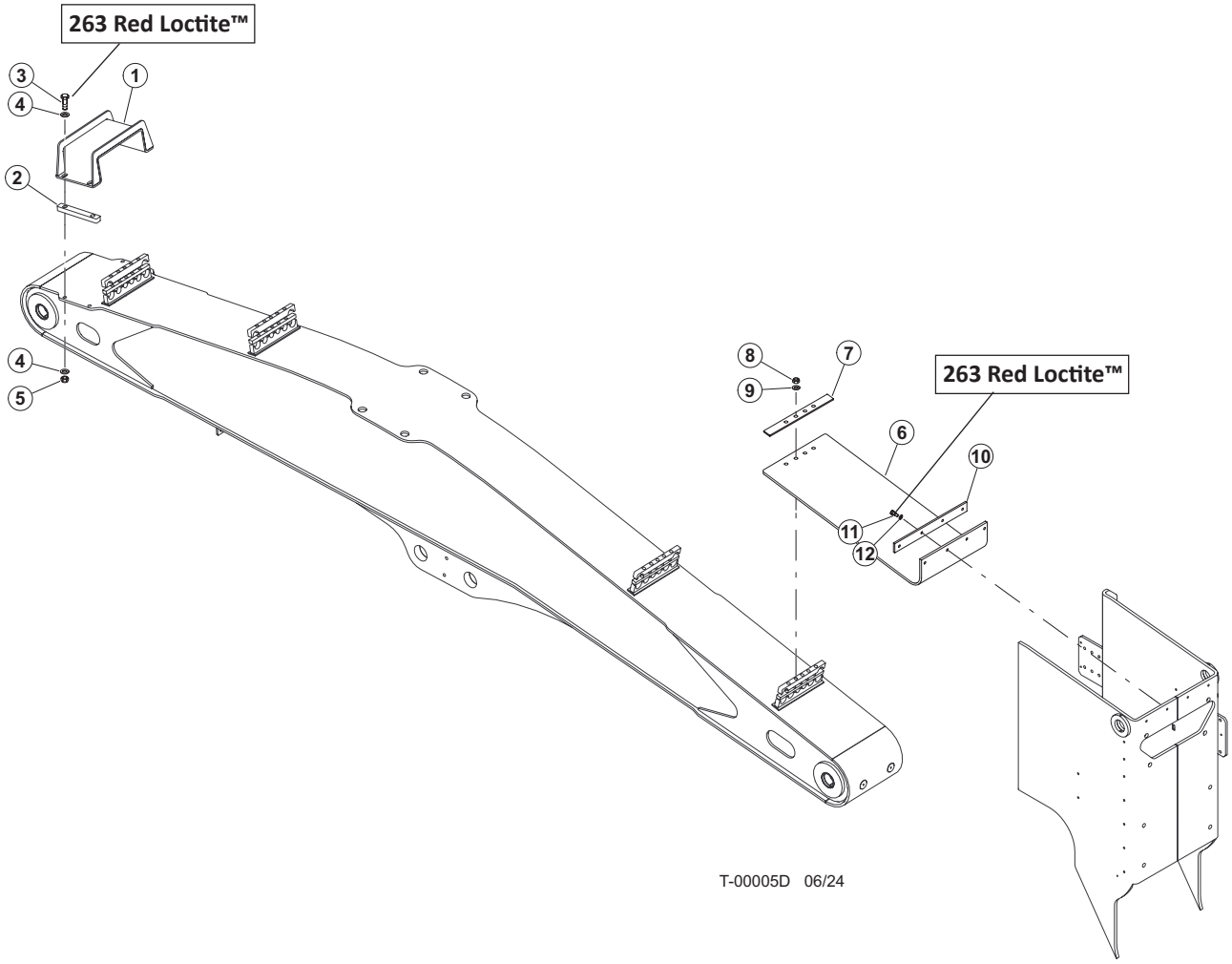

Item	Part #	Description	Qty.
1	60729	GUARD, HOSE - HARVESTOR MAIN BOOM	1
2	65671	BAR, HARVESTER COVER MOUNT SPACER	2
3	15549	BOLT - .75” X 2.0” **263 RED LOCTITE™**	4
4	10806	WASHER, FLAT - .75”	8
5	10817	NUT, 3/4-10 UNC	4
6	58062	RUBBER, WHEELED BOOM COVER D	1
7	52824	PLATE, BELTING HOLD DOWN - BOOM COVER	1
8	15563	NUT, NYLOCK - .625”	4
9	10771	WASHER, SAE FLAT - .625”	4
10	60349	PLATE, RUBBER HOLD DOWN CHIMNEY	1
11	10402	BOLT - .375” X 1.25” **263 RED LOCTITE™**	4
12	10802	WASHER, FLAT - .375”	4

T100-00060 - MAIN BOOM BOOM INSTALLATION - HARVESTOR

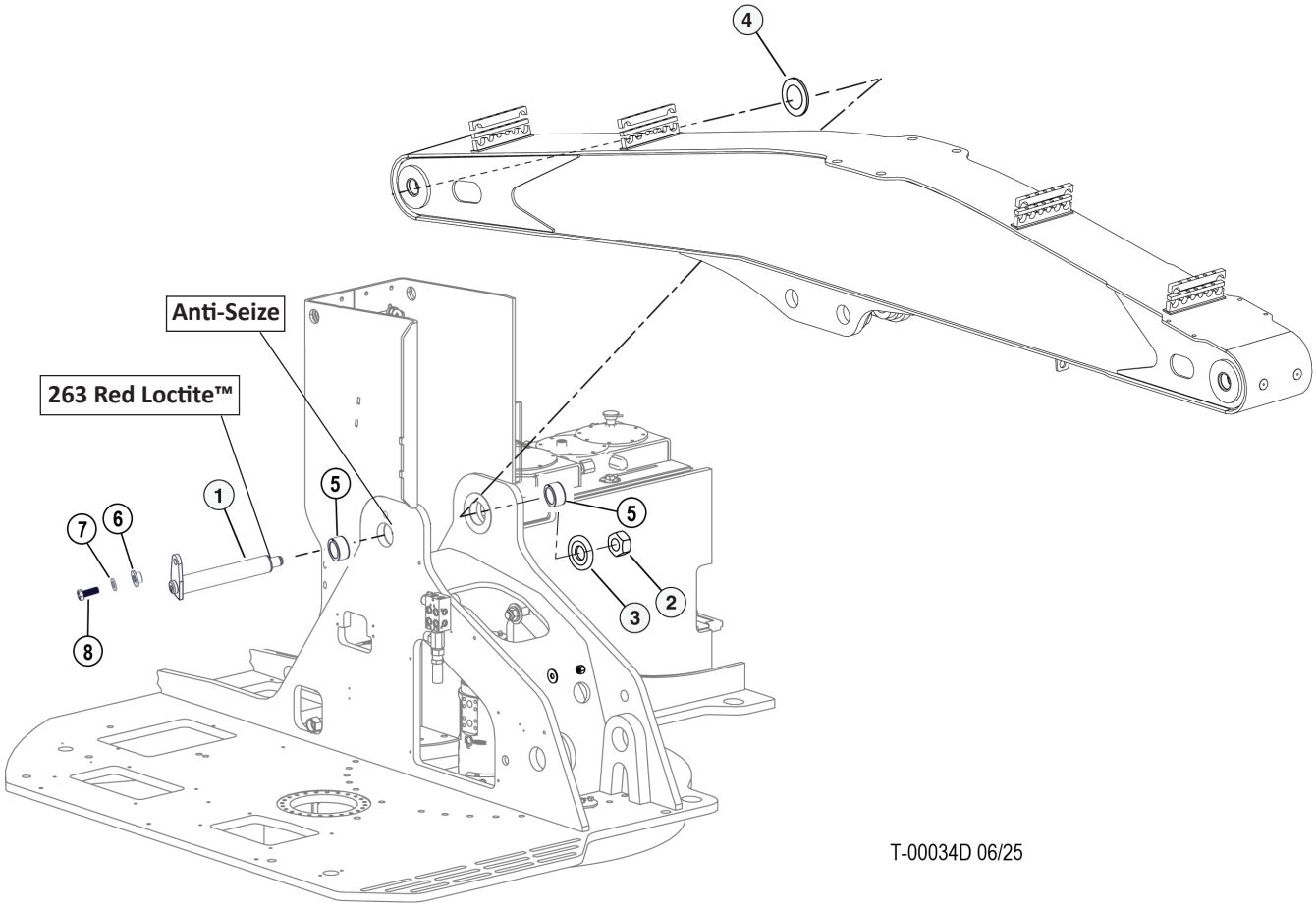

Item	Part #	Description	Qty.
1	60818	PIN ASSY, 3.49X20.12-D-SERIES **263 RED LOCTITE™**	1
2	10728	NUT, NYLOCK - 2” (ZINC PLATED)	1
3	60758	WASHER, BURNED - HARDENED-MAIN BOOM PIN	1
4	18678	SHIM - 3.51" ID X 6.00" OD X .179" THK	AR
4	18679	SHIM - 3.51" ID X 6.00" OD X .135" THK	AR
4	18680	SHIM - 3.51" ID X 6.00" OD X .075" THK	AR
5	60823	BUSHING, 4.00 OD X3.50 ID X 2.05 LG	1
6	18570	WASHER, PIN RETAINING	2
7	15550	WASHER, SAE FLAT - .75"	1
8	15549	BOLT - .75" X 2.0	1

T100-00070 - MAIN BOOM BOOM CYLINDER - 150MM

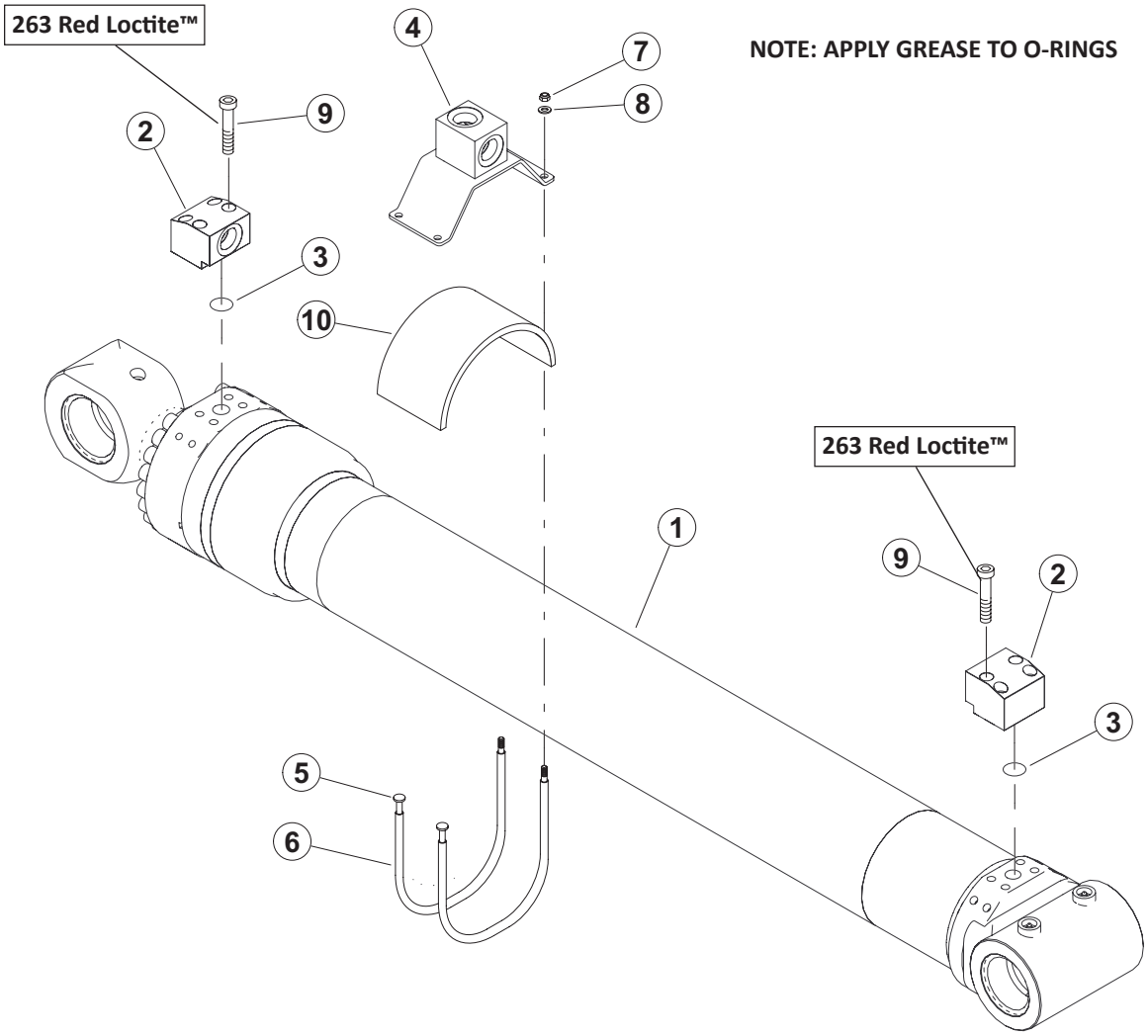

T-00008D 06/24

Item	Part #	Description	Qty.
1	57839	CYLINDER, MAIN BOOM - TRACK 150MM	1
2	57601	FLANGE, BLOCK ELBOW W184-16-16U CODE 62	2
3	15377	O-RING - 1” SF (CODE 61/62)	2
4	60435	WELDMENT, CYL BARREL CLAMP/BLOCK	1
5	57919	CABLE, CYLINDER - 17”	2
6	55411	3/8” HEATER HOSE	2
7	55262	NUT, NYLON INSERT LOCK, 3/8-24	2
8	15528	WASHER, SAE FLAT - .375”	2
9	58397	BOLT, ALLEN HEAD - 12MM X 65MM **263 RED LOCTITE™**	8
10	60653	RUBBER, CYL MANIFOLD MOUNT	1

T100-00070 - MAIN BOOM BOOM CYLINDER COMPONENTS - 150MM

NOTE: APPLY GREASE TO O-RINGS

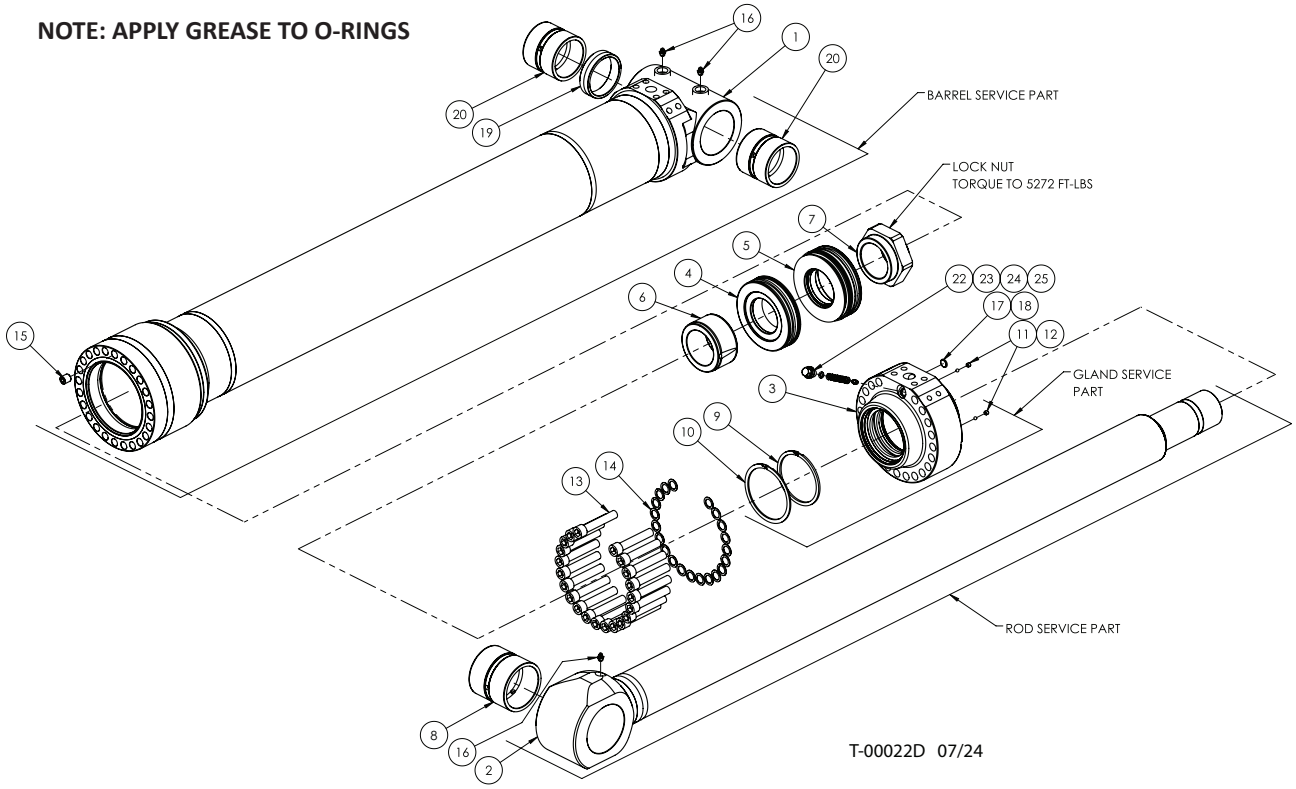

Item	Part #	Description	Qty.
	57839	CYLINDER, MAIN BOOM - TRACK 150MM	1
1	56156	BARREL ASSEMBLY	1
2	56154	ROD ASSEMBLY	1
3	TIM150108	GLAND	1
4	56275	FRONT PISTON	1
5	56274	BACK PISTON	1
6	TIM150117	CUSHION SLEEVE	1
7	LNUT M75	LOCKNUT	1
8	62066	BUSHING	1
9	DNH-112	SPIRAL SNAP RING	1
10	WHM-475	SPIRAL SNAP RING	1
11	SHSS 05-18-0.250	SET SCREW	2
12	62057	STEEL BALL	2
13	SHCS M16 X 90	SHCS METRIC	21
14	HD002049	FLAT WASHER	21
15	SHSS M16 X 16	SET SCREW	1
16	GREASE 1/8” STR	GREASE FITTING	3
17	TL-C5-190-30	TEMPERATURE LABEL	1
18	N1470 - 112	O-RING	1
19	54517	BUSHING SPACER	1
20	62067	BUSHING	2
21	57853	SEAL KIT	1
22	HD002308	PLUG	1
23	0125755	DISC SPRING	1
24	0123995	DISC SPRING	8
25	HD002306	HIGH PRESSURE SPOOL	1

T100-00080 - MAIN BOOM BOOM CYLINDER - 165MM BORE

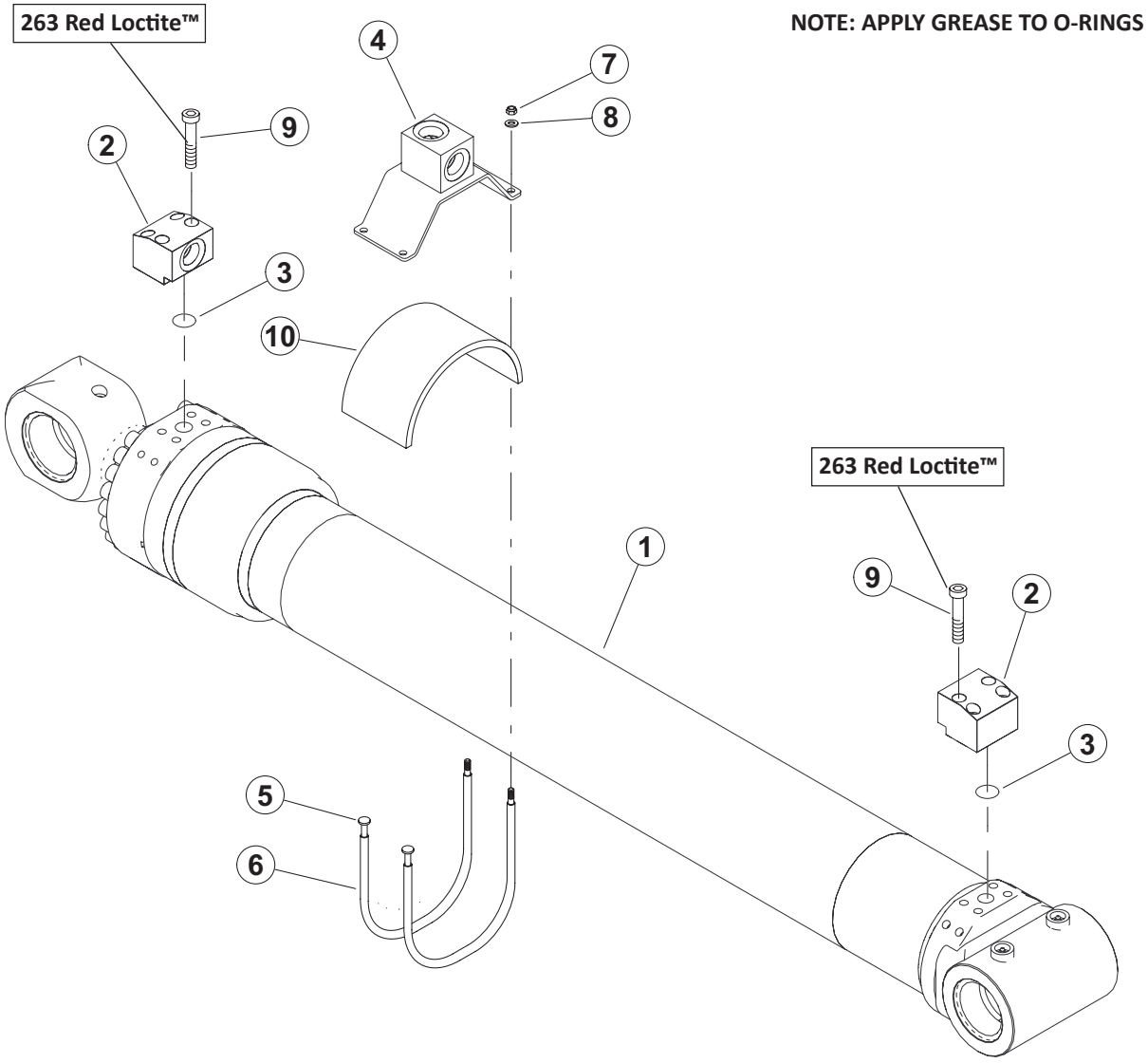

T-00008D 06/24

Item	Part #	Description	Qty.
1	58202	CYLINDER, MAIN BOOM - TRACK 165MM	1
2	57601	FLANGE, BLOCK ELBOW W184-16-16U CODE 62	2
3	15377	O-RING - 1” SF (CODE 61/62)	2
4	60435	WELDMENT, CYL BARREL CLAMP/BLOCK	1
5	57748	CABLE, CYLINDER - 19”	2
6	55411	3/8” HEATER HOSE	2
7	55262	NUT, NYLON INSERT LOCK, 3/8-24	2
8	15528	WASHER, SAE FLAT - .375”	2
9	58397	BOLT, ALLEN HEAD - 12MM X 65MM **263 RED LOCTITE™**	8
10	60653	RUBBER, CYL MANIFOLD MOUNT	1

T100-00081 - MAIN BOOM BOOM CYLINDER COMPONENTS - 165MM

NOTE: APPLY GREASE TO O-RINGS

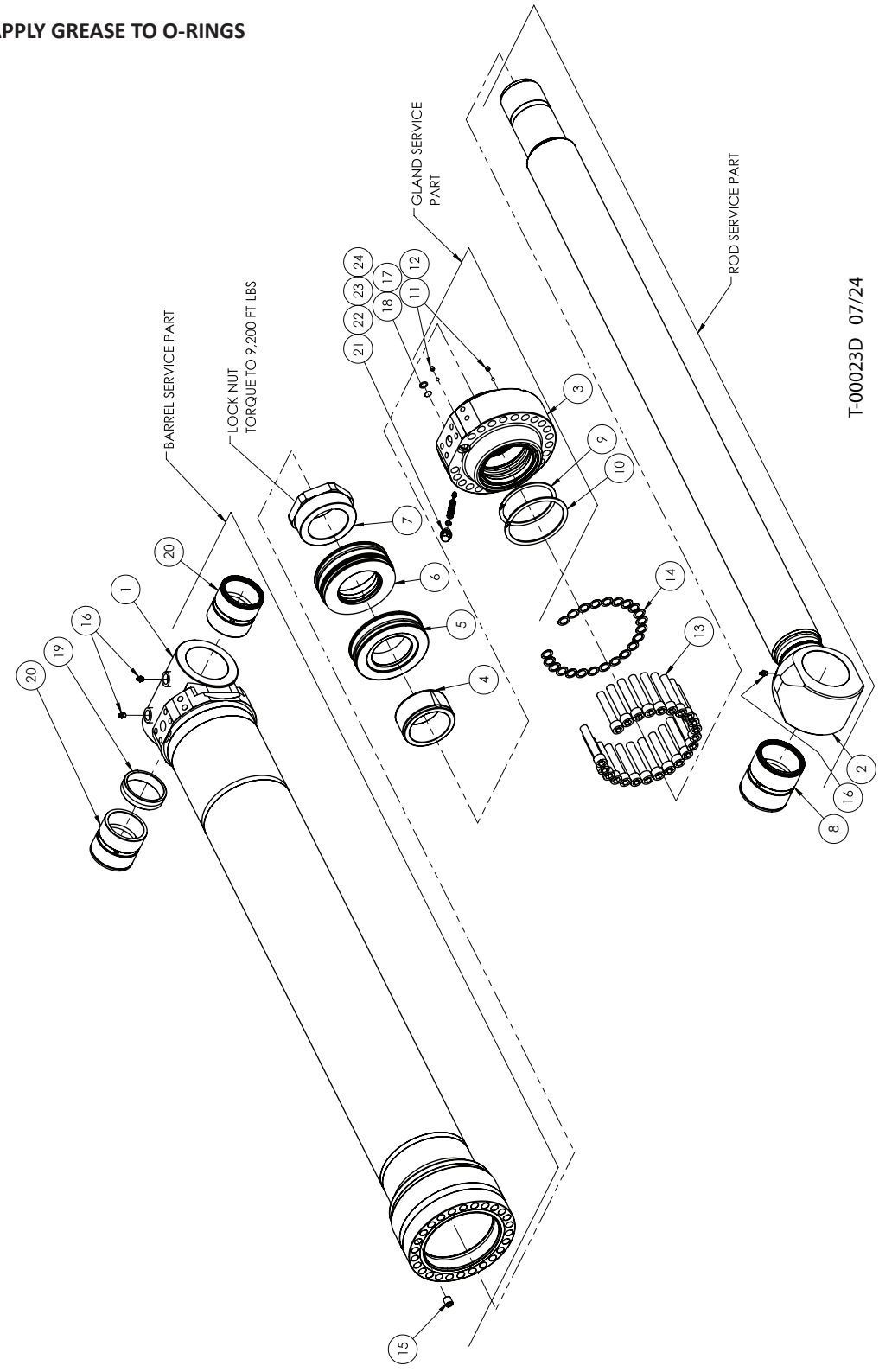

T100-00081 - MAIN BOOM BOOM CYLINDER COMPONENTS - 165MM

Item	Part #	Description	Qty.
	58202	CYLINDER, MAIN BOOM - TRACK 165MM	1
1	57056	BARREL ASSEMBLY	1
2	57054	ROD ASSEMBLY	1
3	TPM165108	GLAND	1
4	TP650117	CUSHION SLEEVE	1
5	TP650109	FRONT PISTON	1
6	TP650110	BACK PISTON	1
7	LNUT M90	LOCKNUT	1
8	62066	BUSHING	1
9	WHM-475	SPIRAL SNAP RING	1
10	WHM-525	SPIRAL SNAP RING	1
11	SHSS 05-18-0.250	SET SCREW	2
12	62057	STEEL BALL	2
13	SHCS M16 X 90	SHCS METRIC	23
14	HD002049	FLAT WASHER	23
15	SHSS M16 X 16	SET SCREW	1
16	GREASE 1/8” STR	GREASE FITTING	3
17	TL-C5-190-30	TEMPERATURE LABEL	1
18	N1470 - 112	O-RING	1
19	54517	BUSHING SPACER	1
20	62067	BUSHING	2
21	HD002308	PLUG	1
22	0125755	DISC SPRING	1
23	0123995	DISC SPRING	8
24	HD002306	HIGH PRESSURE SPOOL	1
25	58329	SEAL KIT	1

T100-00090 - MAIN BOOM BOOM CYLINDER INSTALLATION - FELLER BUNCHER

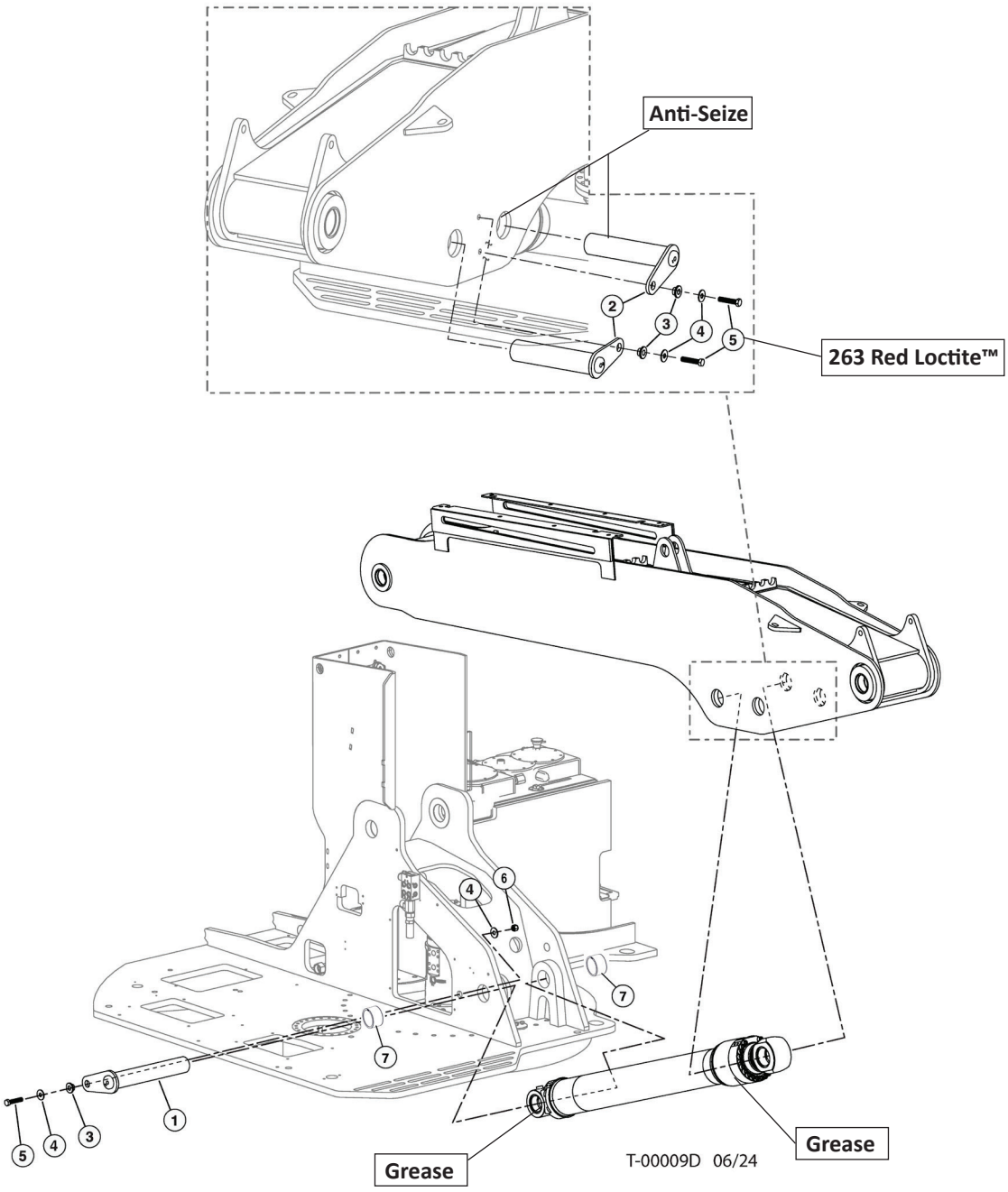

Item	Part #	Description	Qty.
1	60297	PIN ASSY, 80MM X 19.00” - BASE MAIN CYL	1
2	60303	PIN ASSY, 90MM X 15.5” (ROD MAIN/BASE ST **ANTI-SEIZE**	2
3	18570	WASHER, PIN RETAINING	2
4	15550	WASHER, SAE FLAT - .75”	4
5	10841	BOLT - .75” X 3.5” **263 RED LOCTITE™**	2
6	10817	NUT, 3/4-10 UNC	1
7	60290	BUSHING, 3.75 X 80MM X 4.75 (D - UPPER)	2

T100-00100 - MAIN BOOM CYLINDER INSTALLATION - HARVESTOR

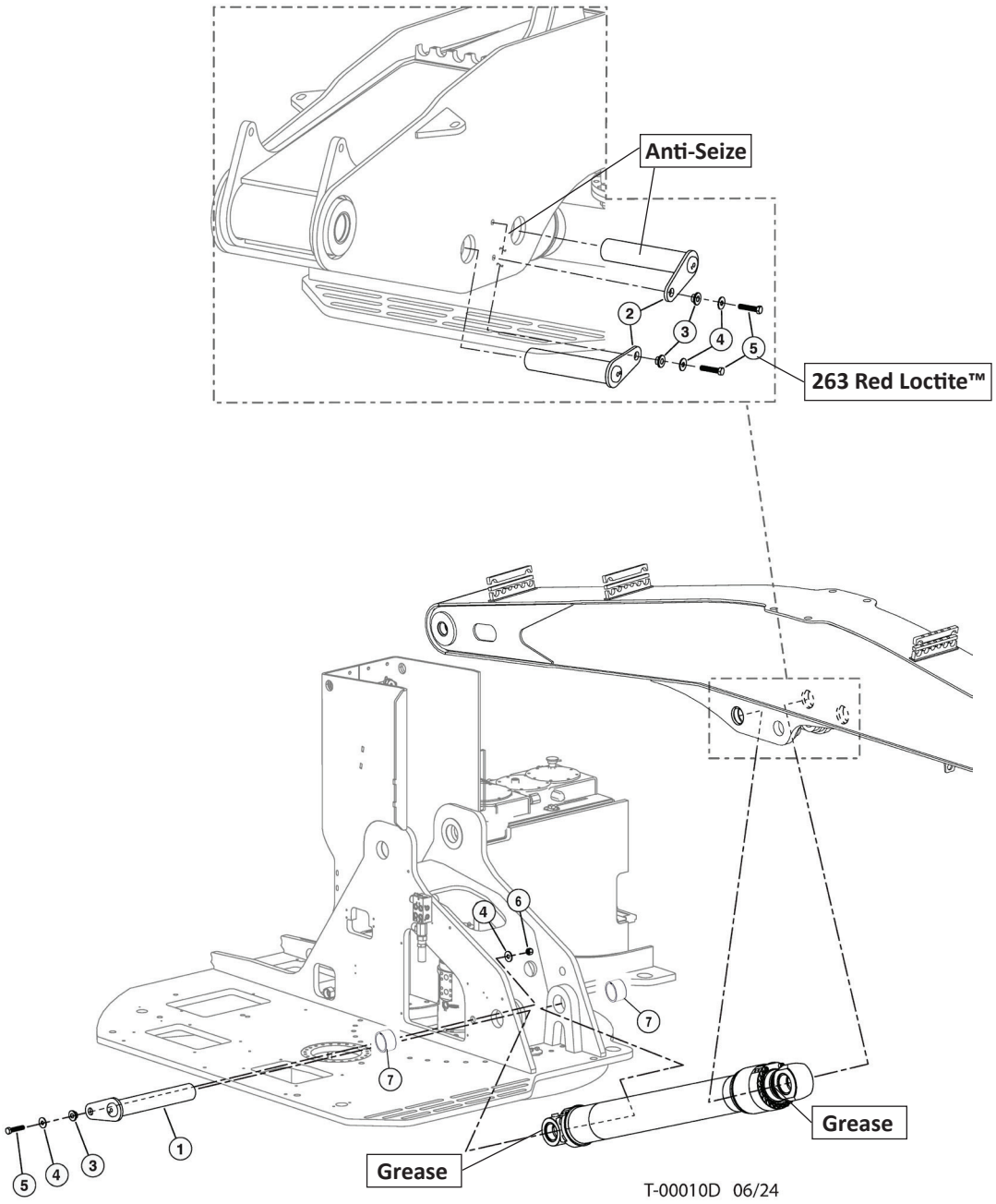

Item	Part #	Description	Qty.
1	60297	PIN ASSY, 80MM X 19.00” - BASE MAIN CYL	1
2	60303	PIN ASSY, 90MM X 15.5” (ROD MAIN/BASE ST **ANTI-SEIZE**	2
3	18570	WASHER, PIN RETAINING	2
4	15550	WASHER, SAE FLAT - .75”	4
5	10841	BOLT - .75” X 3.5” **263 RED LOCTITE™**	2
6	10817	NUT, 3/4-10 UNC	1
7	60290	BUSHING, 3.75 X 80MM X 4.75 (D - UPPER)	2

T100-00110 - STICK BOOM CYLINDER - 130MM BORE

NOTE: HYDRAULIC FITTINGS GET 545 LOCTITE™

NOTE: APPLY GREASE TO O-RINGS

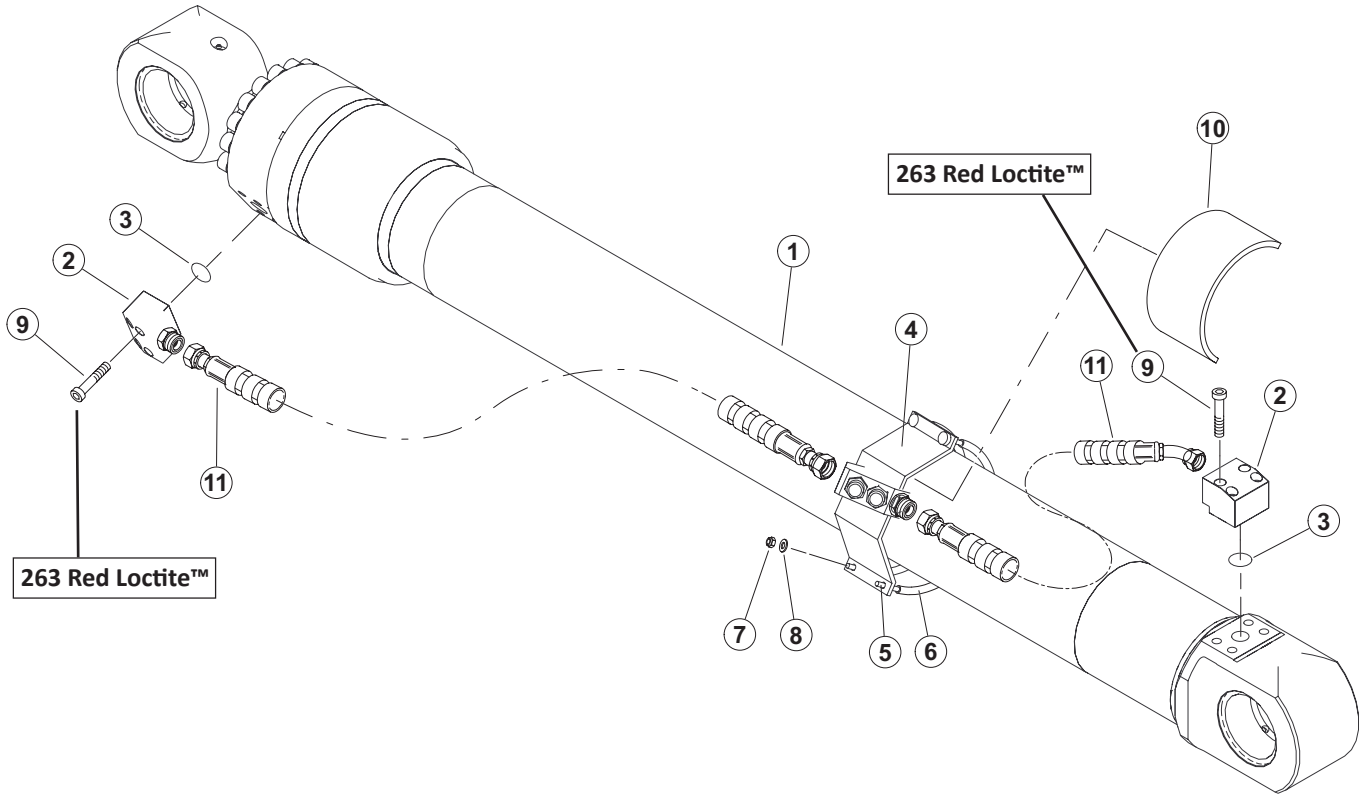

T-00011D 06/24

Item	Part #	Description	Qty.
1	57837	CYLINDER, STICK - FB 130mm	1
2	57601	FLANGE, BLOCK ELBOW W184-16-16U CODE 62	2
3	15377	O-RING - 1” SF (CODE 61/62)	2
4	60521	WELDMENT, CYL STK BARREL 45 DEG	1
5	58031	CABLE, CYLINDER, 15”	2
6	55411	3/8” HEATER HOSE	AR
7	55262	NUT, NYLON INSERT LOCK, 3/8-24	4
8	15528	WASHER, SAE FLAT - .375”	4
9	59149	BOLT - M12-1.75 X 60 Gr 12.9 SHC **263 RED LOCTITE™**	8
10	60653	RUBBER, CYL MANIFOLD MOUNT	1
11	65855	HOSE, HYD, 787TC38 16-16OS-16OS-SW	1
12	65853	HOSE, HYD, 787TC17 16-16OS-16O4-SW	1

T100-00111 - STICK BOOM CYLINDER COMPONENTS - 130MM BORE

NOTE: APPLY GREASE TO O-RINGS

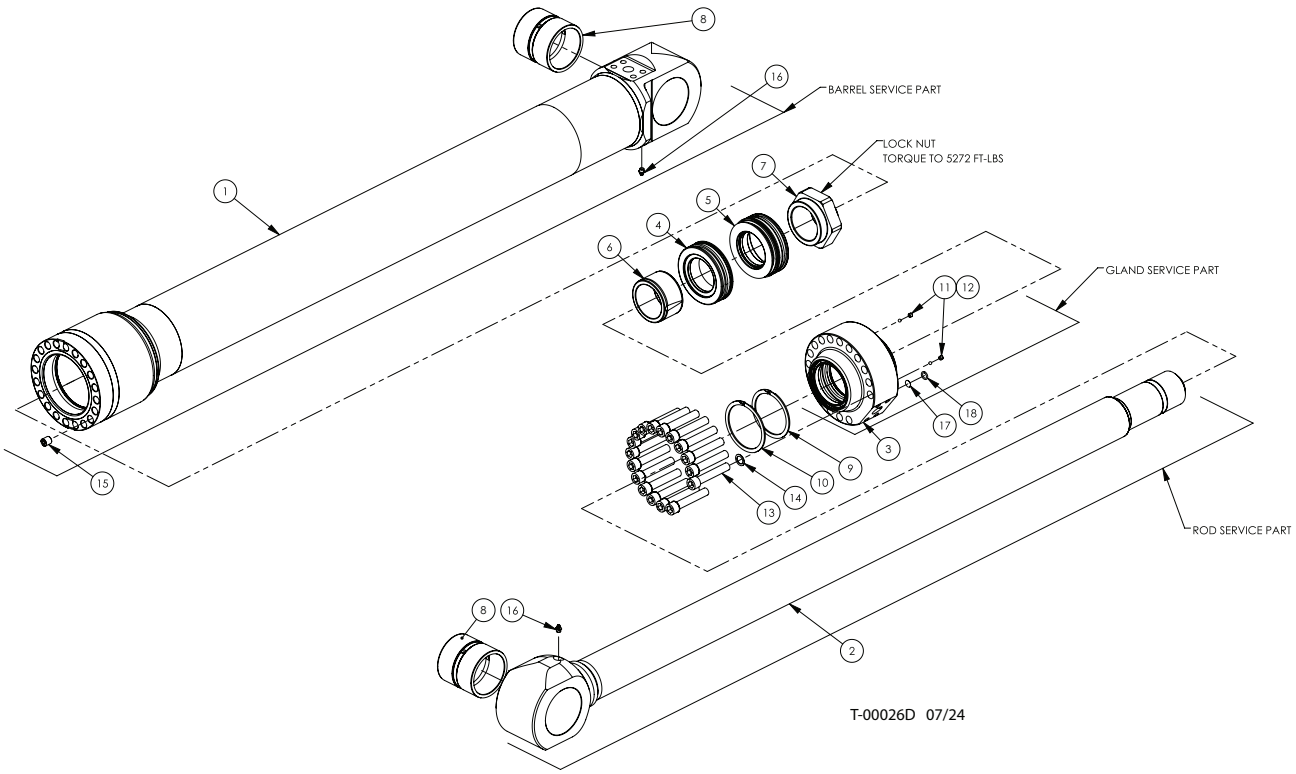

Item	Part #	Description	Qty.
	57837	CYLINDER, STICK BOOM - TRACK 130MM	1
1	TPM130400	BARREL ASSEMBLY	1
2	59015	ROD ASSEMBLY	1
3	TIM130308	GLAND	1
4	TP130109	FRONT PISTON	1
5	TP130110	BACK PISTON	1
6	TIM130217	CUSHION SLEEVE	1
7	LNUT M75	LOCK NUT	1
8	62066	BUSHING	1
9	WHM-400	SPIRAL SNAP RING	2
10	WHM-425	SPIRAL SNAP RING	1
11	SHSS 05-18-0.250	SET SCREW	1
12	62057	STEEL BALL	2
13	SHCS M16 X 90	SHCS METRIC	2
14	SHSS M16 X 16	SET SCREW	17
15	HD002049	FLAT WASHER	17
16	GREASE 1/8” STR	GREASE FITTING	1
17	TL-C5-190-30	TEMPERATURE LABEL	2
18	N1470 - 112	O-RING	1
19	57837	SEAL KIT	1
20	HD002306	HIGH PRESSURE SPOOL	1
21	0123995	DISC SPRING	8
22	0125755	DISC SPRING	1
23	HD002308	PLUG, RELIEF	1

T100-00120 - STICK BOOM CYLINDER - 140MM BORE

NOTE: HYDRAULIC FITTINGS GET 545 LOCTITE™

NOTE: APPLY GREASE TO O-RINGS

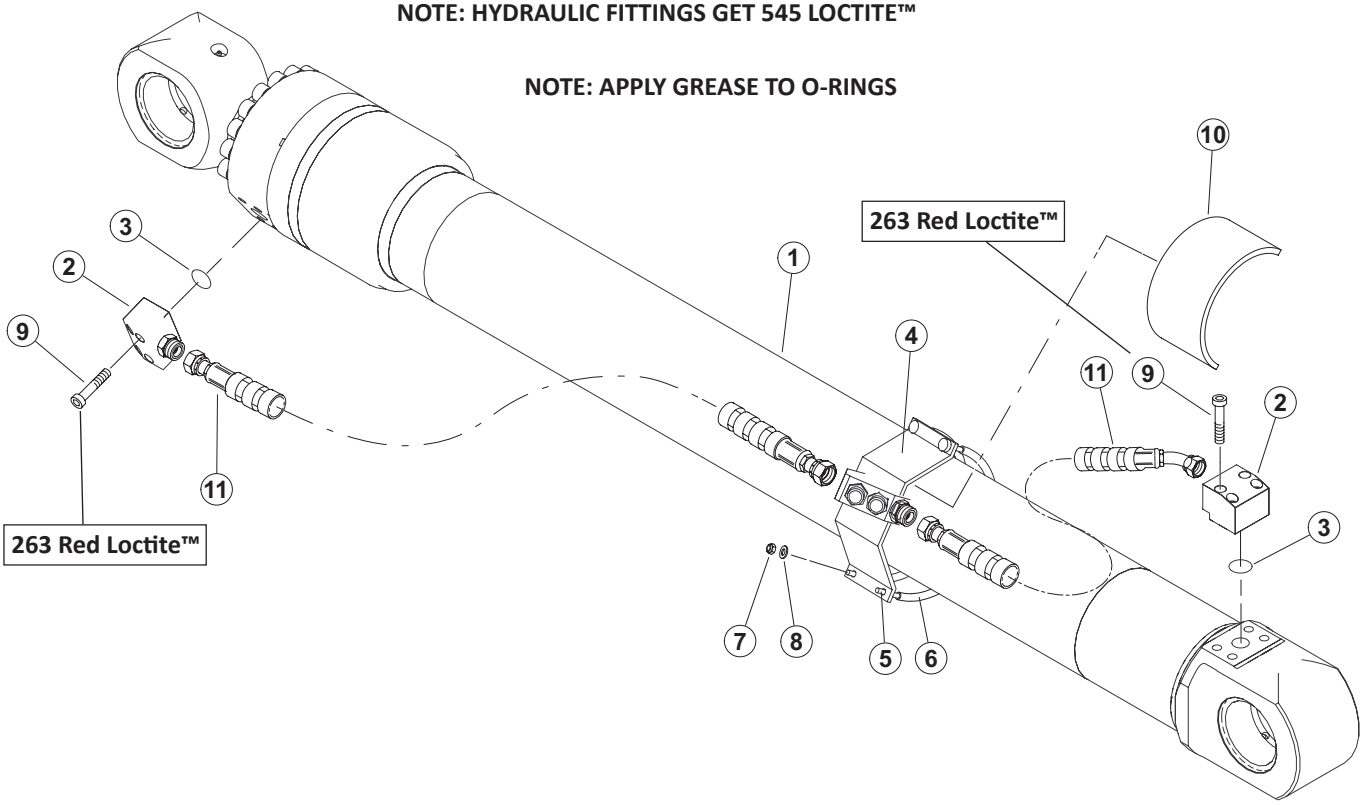

T-00011D 06/24

Item	Part #	Description	Qty.
1	57838	CYLINDER, STICK - 140mm	1
2	57601	FLANGE, BLOCK ELBOW W184-16-16U CODE 62	2
3	15377	O-RING - 1” SF (CODE 61/62)	2
4	60521	WELDMENT, CYL STK BARREL 45 DEG	1
5	58031	CABLE, CYLINDER, 15”	2
6	55411	3/8” HEATER HOSE	AR
7	55262	NUT, NYLON INSERT LOCK, 3/8-24	4
8	15528	WASHER, SAE FLAT - .375”	4
9	59149	BOLT - M12-1.75 X 60 Gr 12.9 SHC **263 RED LOCTITE™**	8
10	60653	RUBBER, CYL MANIFOLD MOUNT	1
11	65855	HOSE, HYD, 787TC38 16-16OS-16OS-SW	1
12	65853	HOSE, HYD, 787TC17 16-16OS-16O4-SW	1

T100-00121 - STICK BOOM CYLINDER COMPONENTS - 140MM BORE

NOTE: APPLY GREASE TO O-RINGS

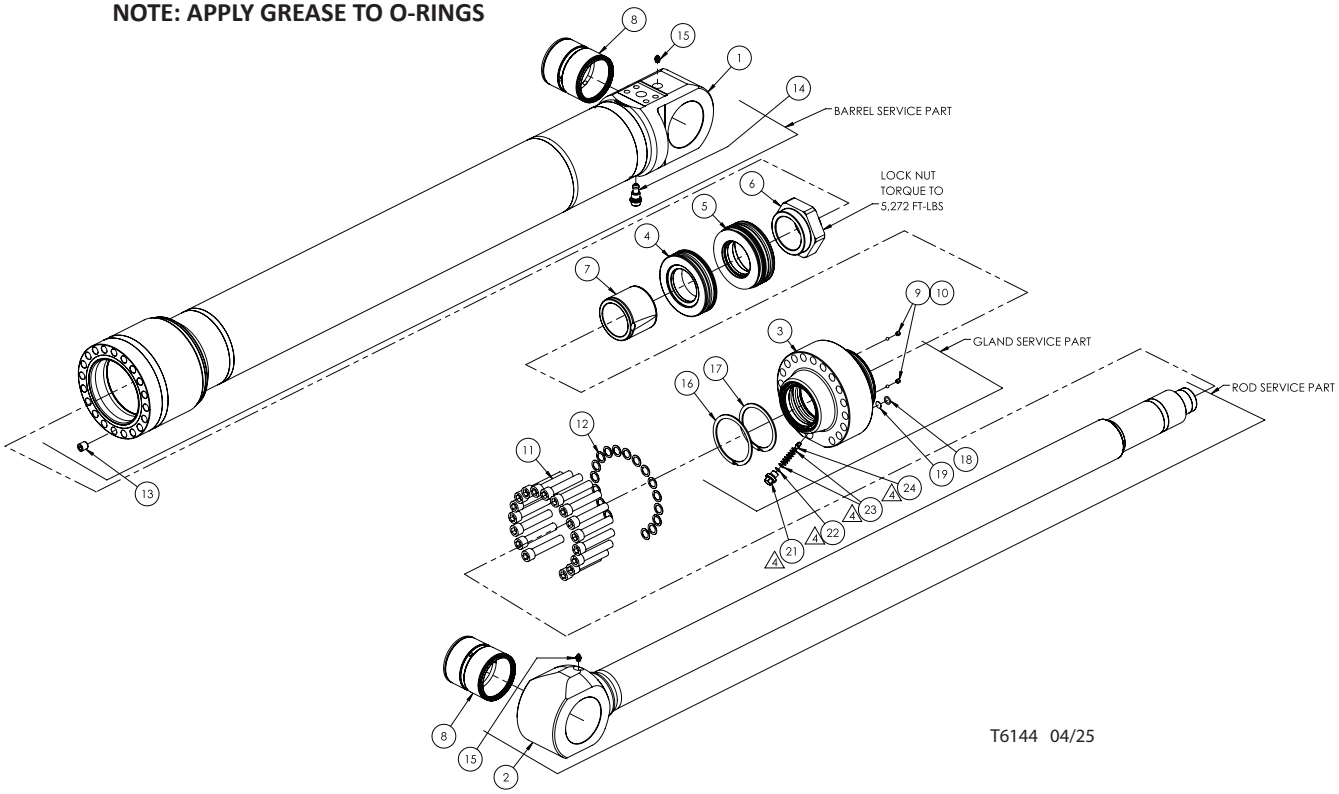

Item	Part #	Description	Qty.
	57838	CYLINDER, STICK BOOM - TRACK 140MM	1
1	TPM140100	BARREL ASSEMBLY	1
2	58293	ROD ASSEMBLY	1
3	58294	GLAND	1
4	TPM140209	FRONT PISTON	1
5	TPM140210	BACK PISTON	1
6	LNUT M75	LOCKNUT	1
7	TIM130317	CUSHION SLEEVE	2
8	62066	BUSHING	2
9	SHSS 05-18-0.250	SET SCREW	2
10	62057	STEEL BALL	17
11	SHCS M16 X 90	SHCS METRIC	17
12	62057	FLAT WASHER	1
13	SHSS M16 X 16	SET SCREW	1
14	IRAB.M18.0R.420	PRESSURE RELIEF w/ANTI CAV	2
15	GREASE 1/8” STR	GREASE FITTING	1
16	WHM-425	SPIRAL SNAP RING	1
17	WHM-400	SPIRAL SNAP RING	1
18	N1470 - 112	O-RING	1
19	TL-C5-190-30	TEMPERATURE LABEL	1
20	57838-SK	SEAL KIT	1
21	HD002308	PLUG, RELIEF	1
22	0125755	DISC SPRING	1
23	0123995	DISC SPRING	8
24	HD002306	HIGH PRESSURE SPOOL	1

T100-00130 - STICK BOOM - FELLER BUNCHER

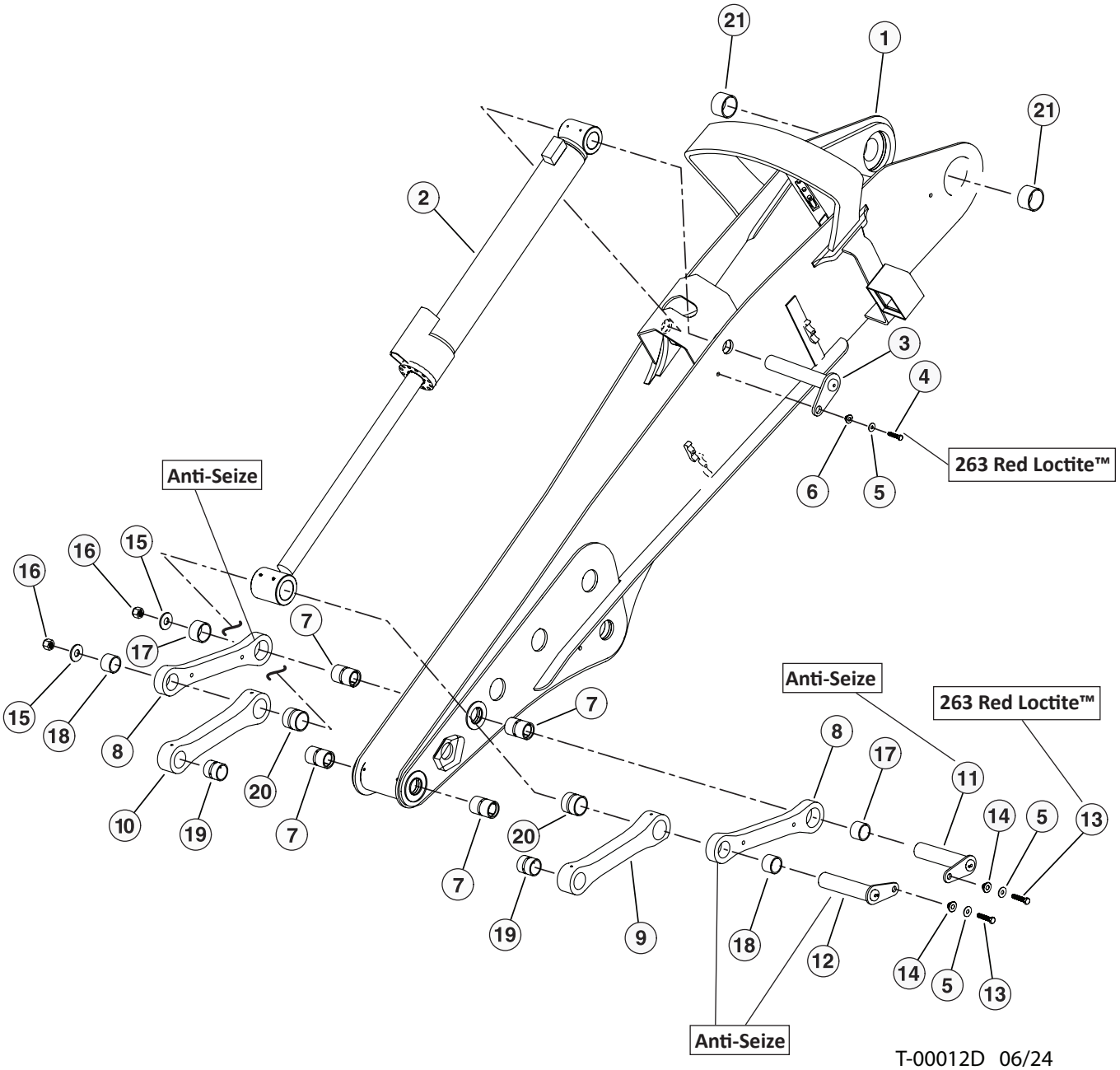

T-00012D 06/24

T100-00130 - STICK BOOM - FELLER BUNCHER

Item	Part #	Description	Qty.
1	60315-AST	WELDMENT, STICK BOOM F/B D - SERIES	1
2	57846	TOOL CYLINDER ASSEMBLY	1
3	51645	PIN ASSEMBLY, 2.50 DIA X 14.75”	1
4	10775	BOLT - 3/4” x 2.5” **263 RED LOCTITE™**	1
5	15550	WASHER, SAE FLAT - .75”	3
6	54136	WASHER, pin retaining	1
7	11704	BUSHING - 2.5” X 4.25”	4
8	54385	BAR, LINK CONNECTING 3” PIN 2.0TK **ANTI-SEIZE**	2
9	54421	BAR, LINK - CONNECTING (TOP) 3” PIN L.H.	1
10	54386	BAR, LINK - CONNECTING (TOP) 3” PIN R.H.	1
11	54391	PIN ASSEMBLY 2.5 X 18.88(16”W/LGTH) **ANTI-SEIZE**	1
12	54392	PIN ASSEMBLY 3.0 X 18.88(16”W/LGTH) **ANTI-SEIZE**	1
13	15549	BOLT - .75” X 2.0 **263 RED LOCTITE™**	2
14	18570	WASHER, PIN RETAINING	2
15	12021	WASHER, BURNED	2
16	10728	NUT, NYLOCK - 2” (ZINC PLATED)	2
17	54395	BUSHING - 2.5” X 2.0” (4 BAR)	2
18	54396	BUSHING - 3.0” X 2.0” (4 BAR)	2
19	14241	BUSHING - 2.5” X 3” (4 BAR)	2
20	54397	BUSHING - 3.0” X 3.0” (4 BAR)	2
21	18565	BUSHING - 3.5” X 2.5”	2

T100-00140 - STICK BOOM TOOL TILT CYLINDER COMPONENTS

NOTE: APPLY GREASE TO O-RINGS

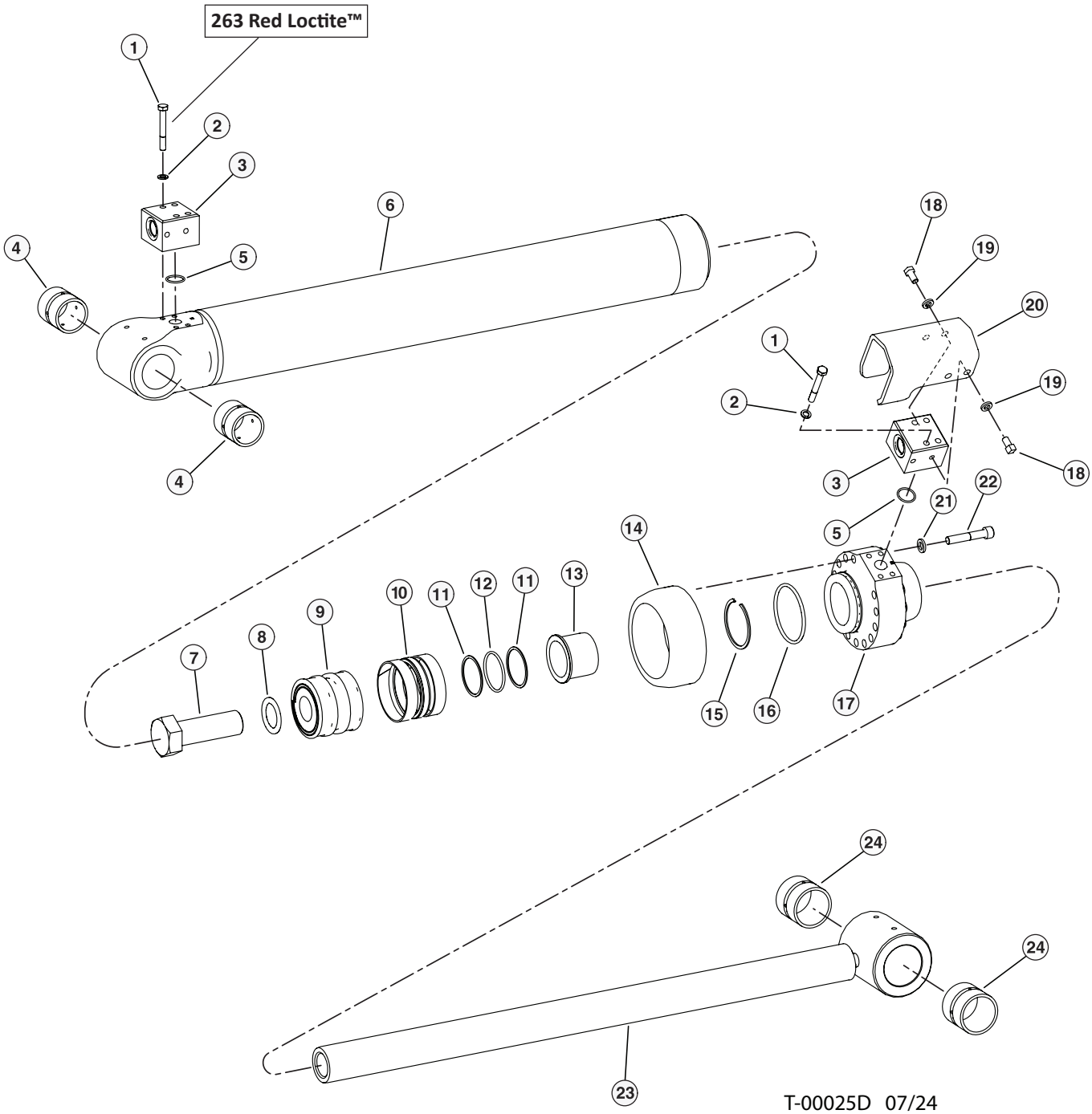

T-00025D 07/24

T100-00140 - STICK BOOM TOOL TILT CYLINDER COMPONENTS

Item	Part #	Description	Qty.
	57846	TOOL CYLINDER ASSEMBLY	1
1	55907	HHCS,M12X1.75,90,10.9,PLN **263 RED LOCTITE™**	8
2	55911	LOCK WASHER M12	8
3	691608B	ADAPTER BLOCK	2
4	58421	BARREL END BUSHING	2
5	790219A	O-RING,-219,NITRILE,90A	2
6	204537B	BARREL ASSEMBLY	1
7	24563	2.00-12 X 6.00” LG HHCS GR8	1
8	718032A	WASHER	1
	57895	PISTON ASSEMBLY	1
9	412127B	PISTON EXTERNAL	1
10	433152A	PISTON INTERNAL	1
11	704337A	BU RINGS 309-395	2
12	703337A	O-RINGS 309-395	1
13	691860B	CUSHION SLEEVE	1
14	540562B	ROD BEARING EXTERNAL HOUSING	1
15	716147A	RETAINING RING	1
16	703425A	O-RINGS 425-475	1
17	57896	ROD BEARING ASSEMBLY	1
18	711067A	HHCS,1/2-13,1.00,GR5,PLN	1
19	55909	LOCK WASHER,1/2”,PLN	4
20	55897	GUARD	4
21	55912	WASHER	14
22	711425A	SHCS,5/8-11,3.50,A574,PLN	14
23	57894	ROD ASSEMBLY	1
24	722363A	CYLINDER BUSHING	2
	57897	KIT, SEAL REPAIR - TOOL TILT CYLINDER	1

T100-00150 - GREASE LINE KIT - FELLER BUNCHER / CONTROL FALL PROCESSOR

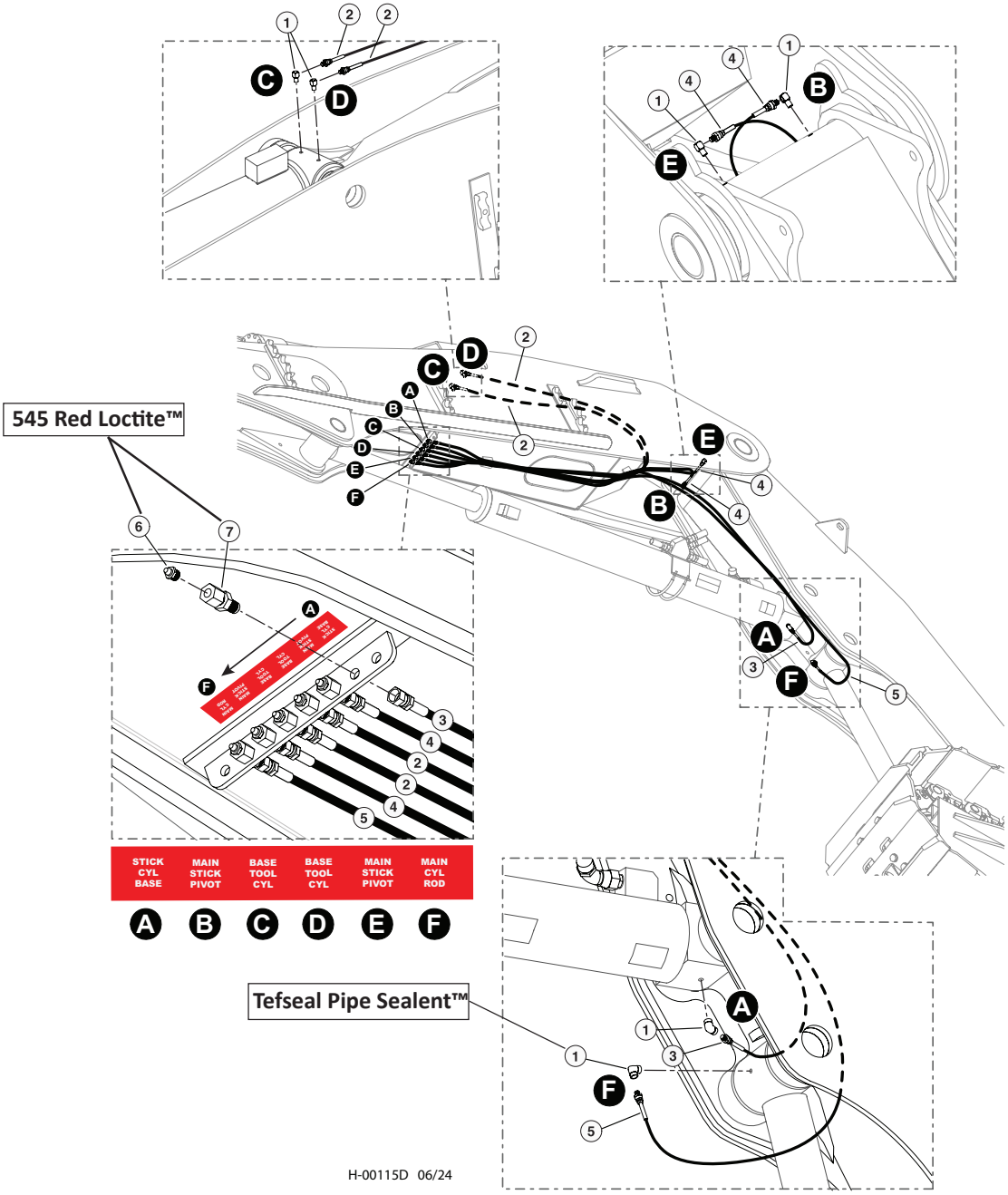

Item	Part #	Description	Qty.
1	22281	FITTING, 90° - 5546132 **TEFSEAL PIPE SEALENT™**	4
2	55605 - (KIT)	HOSE ASSY - 2133-02-02PS-04JS (TOOL CYL BASE)	2
3	55605 - (KIT)	HOSE ASSY - 2138-02-02PS-04JS (STICK CYL BASE)	1
4	55605 - (KIT)	HOSE ASSY - 2188-02-02PS-04JS (MAIN/STICK PIVOT)	2
5	55605 - (KIT)	HOSE ASSY - 2147-02-02PS-04JS (MAIN CYL ROD)	1
6	15658	CONNECTOR, STRAIGHT BULKHEAD - 2239-2-4S **545 RED LOCTITE™**	6
7	10704	FITTING, STRAIGHT GREASE - 1/8” PIPE THREAD **545 RED LOCTITE™**	6

T100-00151 - ARM ASSEMBLY, FB, HD, U - (TANGUAY HD)

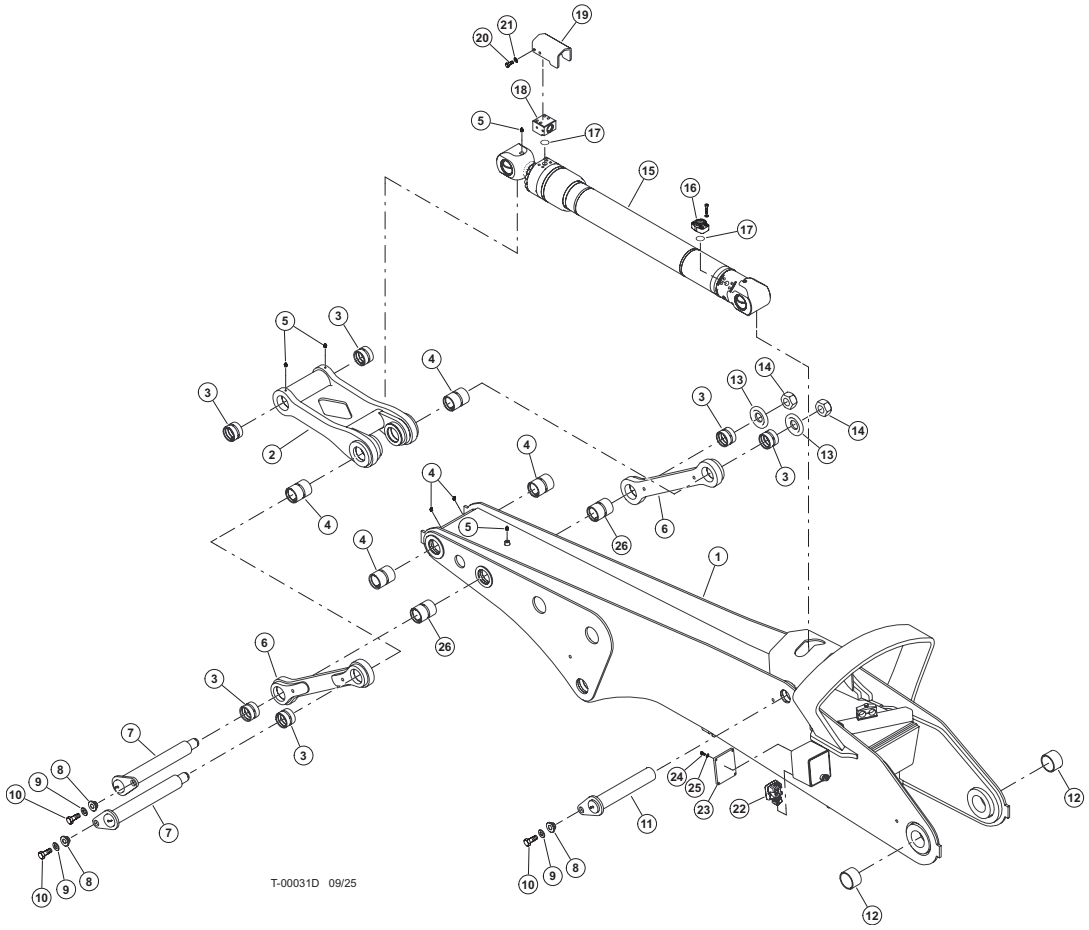

Item	Part #	Description	Qty.
1	58116	WELDMENT, STICK BOOM HD (TANGUAY)	1
2	487650	WELDMENT, LINK BOOM TO TOOL CYL-TAIL	1
3	48303	BUSHING, 3.5 X 3.0X 2.5	6
4	484250	BUSHING, 3.5 X 3.0 X 4.5	6
5	59122	ZERK, GREASE - 1/8-27 NPTF, ST	4
6	62580	DOG BONE-POWER STICK	2
7	48310	3.0 X 20.00 PIN ASSY	2
8	18570	WASHER, PIN RETAINING	3
9	15550	WASHER, SAE FLAT - .75”	3
10	15549	BOLT - .75” X 2.0	3
11	60683	PIN, TOOL TILT CYLINDER HD	1
12	18565	BUSHING - 3.5” X 2.5”	2
13	12021	WASHER, BURNED	2
14	10728	NUT, NYLON LOCK	2
15	58101	CYLINDER, TOOL TILT - T755 WC	1
16	18397 - (KIT - 59052)	CONNECTOR, FLANGE PAD - W48-16-16U(C 62)	1
17	15377	O-RING - 1” SF (CODE 61/62)	2
18	58231	MANIFOLD, PORT BLOCK - TOOL TILT CYL.	1
19	58232	GUARD, PORT BLOCK TOOL TILT CYL	1
20	10783	BOLT - .5” X 1”	4
21	15534	WASHER, SAE FLAT - .5”	4
22	50999	LIGHT, BOOM MOUNTED - LED LAMPS	1
23	53081	LEXAN, BOOM LIGHT COVER	1
24	15576	BOLT - .25” X 1.00”	4
25	10757	WASHER, SAE FLAT - .25”	4

T100-00160 - STICK BOOM FOUR BAR LINK GREASE FITTINGS

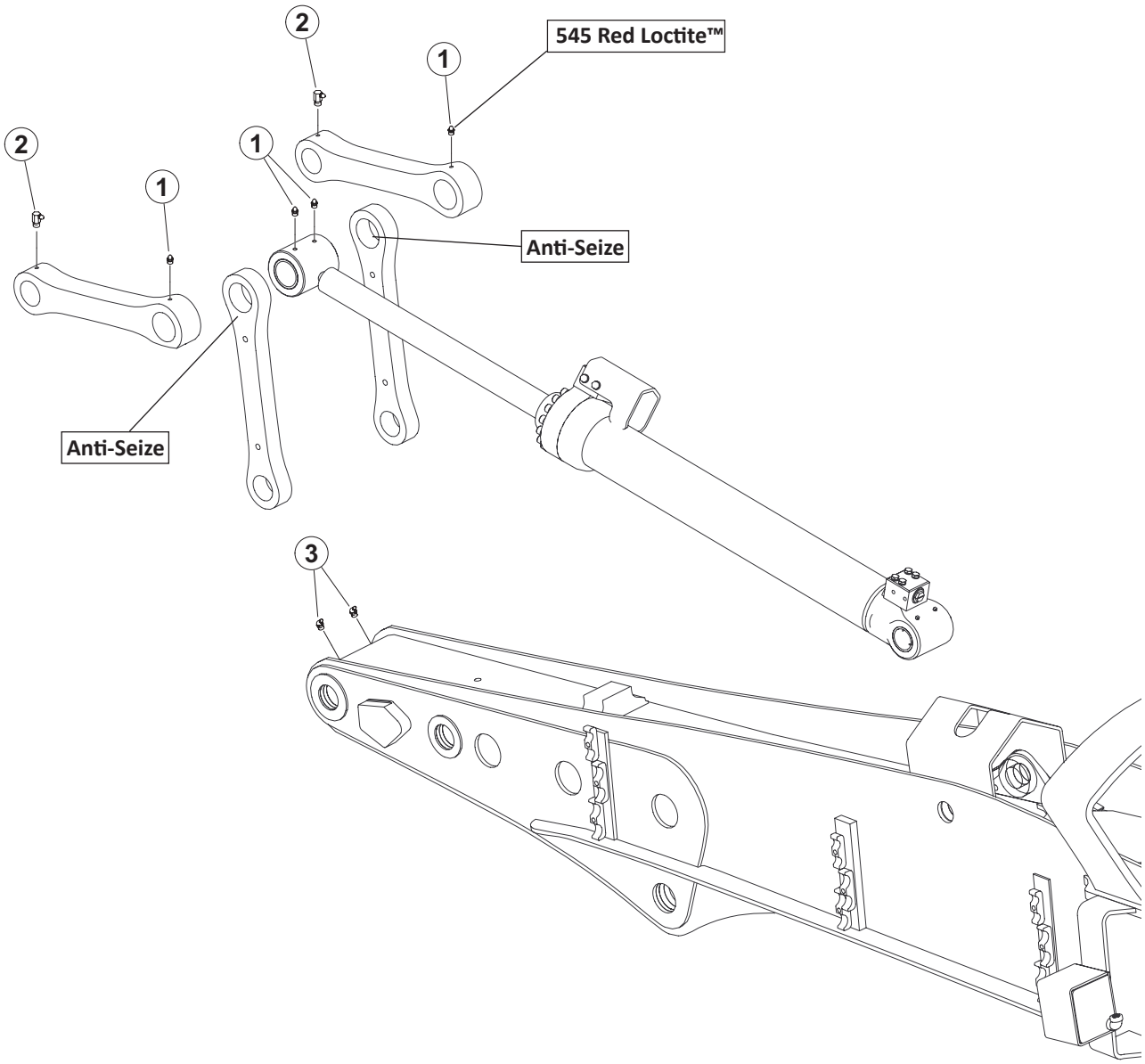

T-00013D 06/24

Item	Part #	Description	Qty.
1	59122	ZERK, GREASE - 1/8-27 NPTF, ST **545 RED LOCTITE™**	4
2	59123	ZERK, GREASE - 1/8-27 NPTF, 90	2
3	59133	ZERK, GREASE - 1/8-27 NPTF, 45	2

T100-00170 - FELLER BUNCHER / CONTROL FALL PROCESSOR - LIGHT INSTALLATION

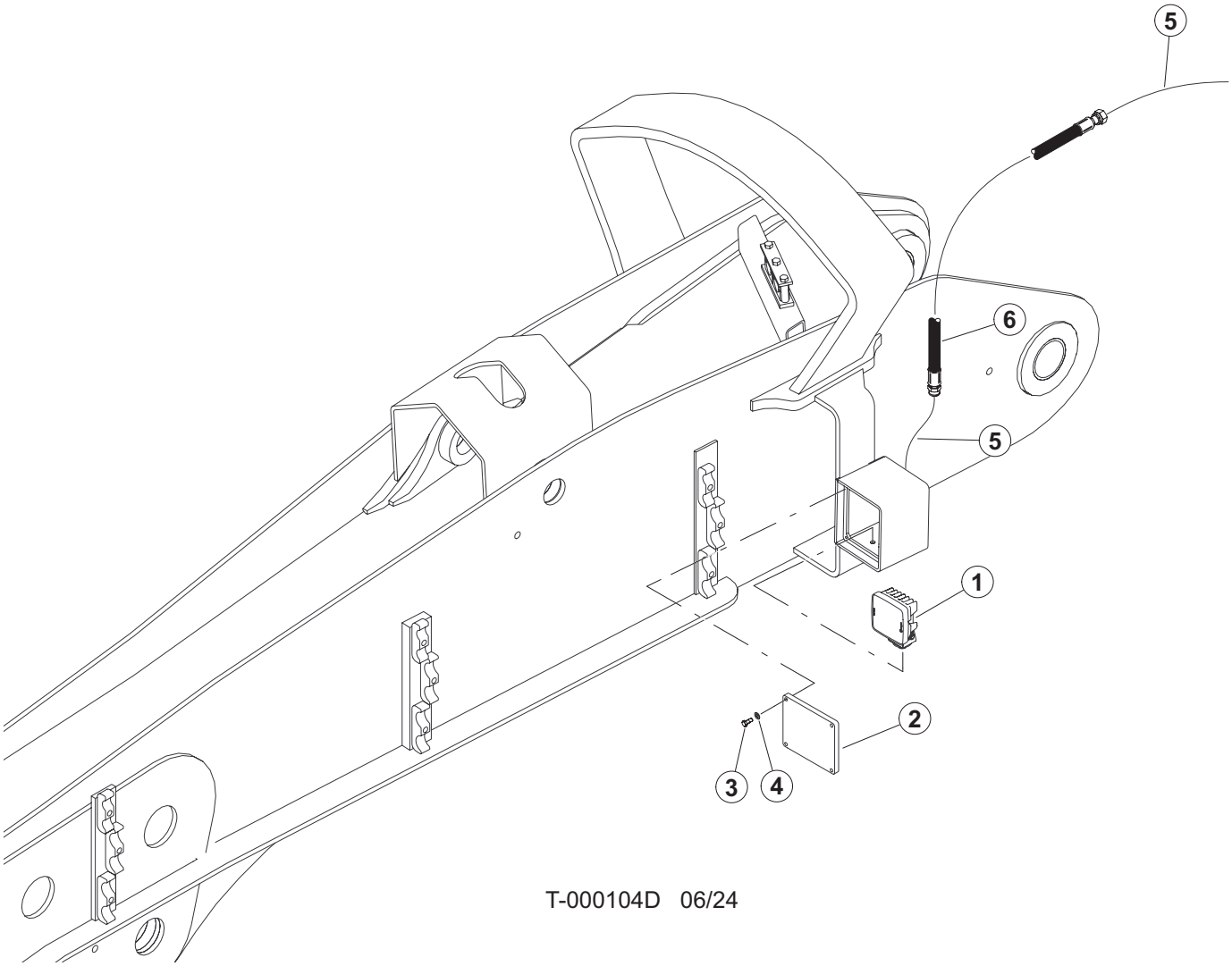

T-000104D 06/24

Item	Part #	Description	Qty.
1	53208	LIGHT	1
2	53081	LEXAN, BOOM LIGHT/SWING OUT DOOR B&C SER	1
3	15576	1/4” X 1’ BOLT	4
4	10757	1/4” WASHER	4
5	58380	CABLE	AR
	54065	SOCKET, CONTACT - #2 **(NOT SHOWN)**	1
	53176	CONNECTOR, TERMINAL 16-18G SOLID DEUTSCH **(NOT SHOWN)**	2
	54064	SOCKET, WEDGE LOCK - #2 **(NOT SHOWN)**	1
6	58068 - (KIT)	HOSE ASSY - 387TC84 06-06OS-08PS (STICK BOOM LIGHT CABLE)	1

T100-00170 - FIXED PROCESSOR STICK BOOM

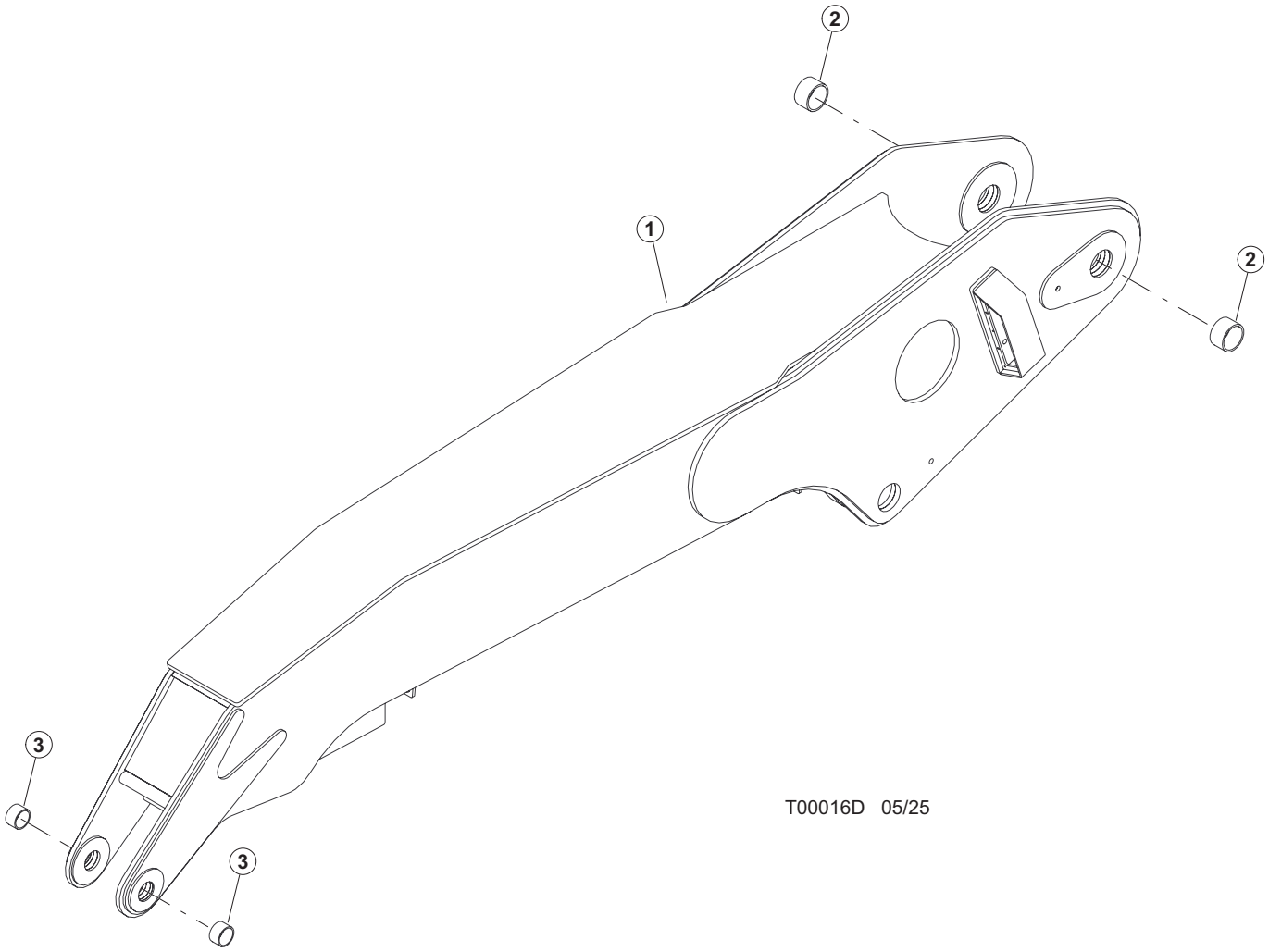

Item	Part #	Description	Qty.
1	47805	WELDMENT, STICK BOOM HARVESTOR	1
2	47222	BUSHING, HARVESTER STICK BOOM	2
3	65907	BUSHING 2.5ID X 3.0OD X 2.2LG	2

T100-00180 - FIXED PROCESSOR STICK BOOM - LIGHT INSTALLATION

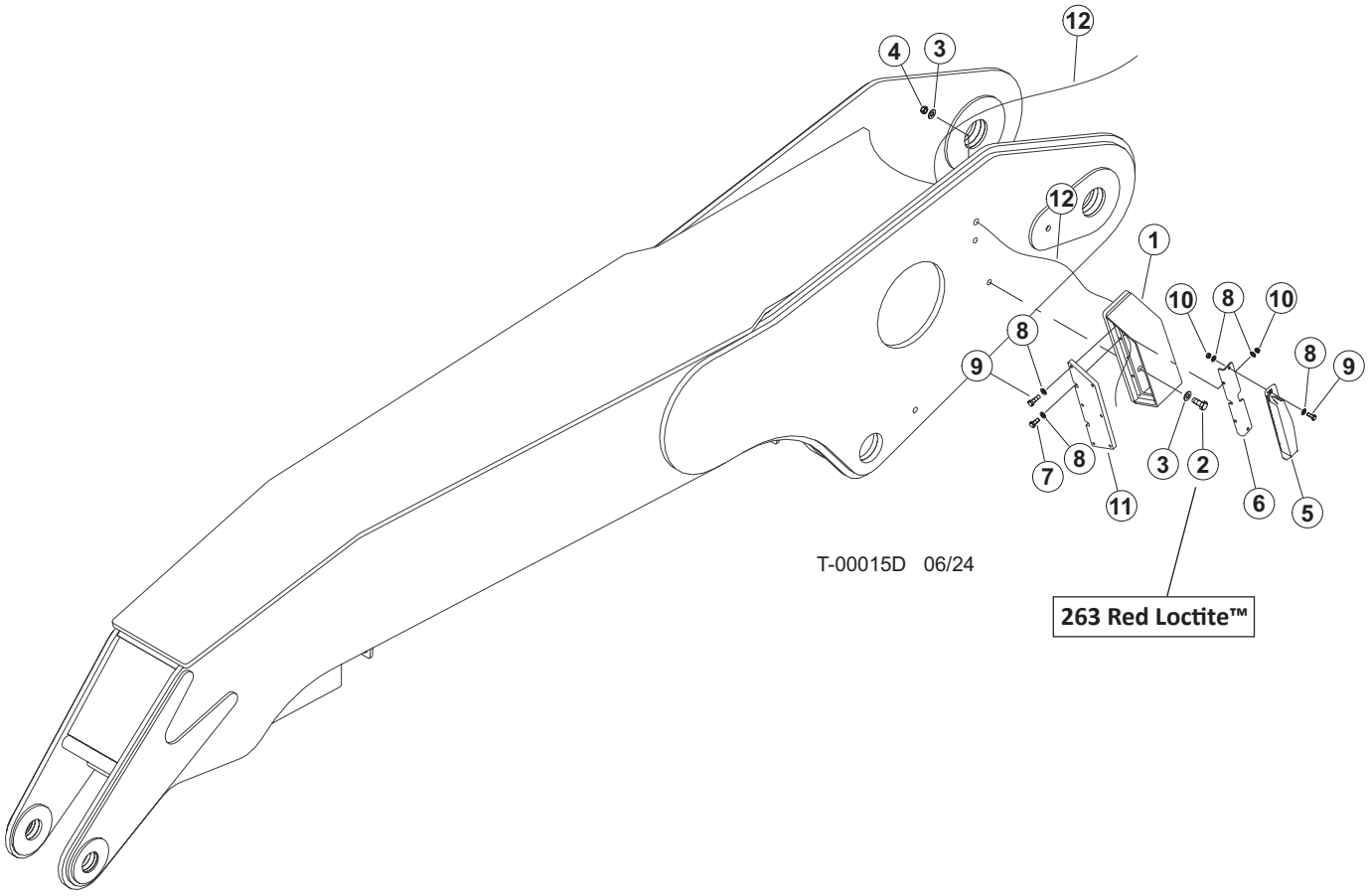

Item	Part #	Description	Qty.
1	48363	BOX, BOOM LIGHT - TAIL	1
2	15517	BOLT - .625” X 2.5” **263 RED LOCTITE™**	2
3	10771	WASHER, SAE FLAT - .625”	4
4	10816	NUT, LOCK - .625”	2
5	57384	LIGHT, BOOM RADIUS - LED	1
6	48364	ANGLE, LIGHT	1
7	15576	BOLT - .25” X 1.00”	6
8	10757	WASHER, SAE FLAT - .25”	14
9	15604	BOLT - .25” X .75”	4
10	15509	NUT, NYLOCK - .25”	4
11	48362	GUARD, BOOM LIGHT	1
12	58380	CABLE	AR
*	54065	SOCKET, CONTACT - #2 **(NOT SHOWN)**	1
*	53176	CONNECTOR, TERMINAL 16-18G SOLID DEUTSCH **(NOT SHOWN)**	2
*	54064	SOCKET, WEDGE LOCK - #2 **(NOT SHOWN)**	1

T100-00190 - PROCESSOR SQUIRT BOOM

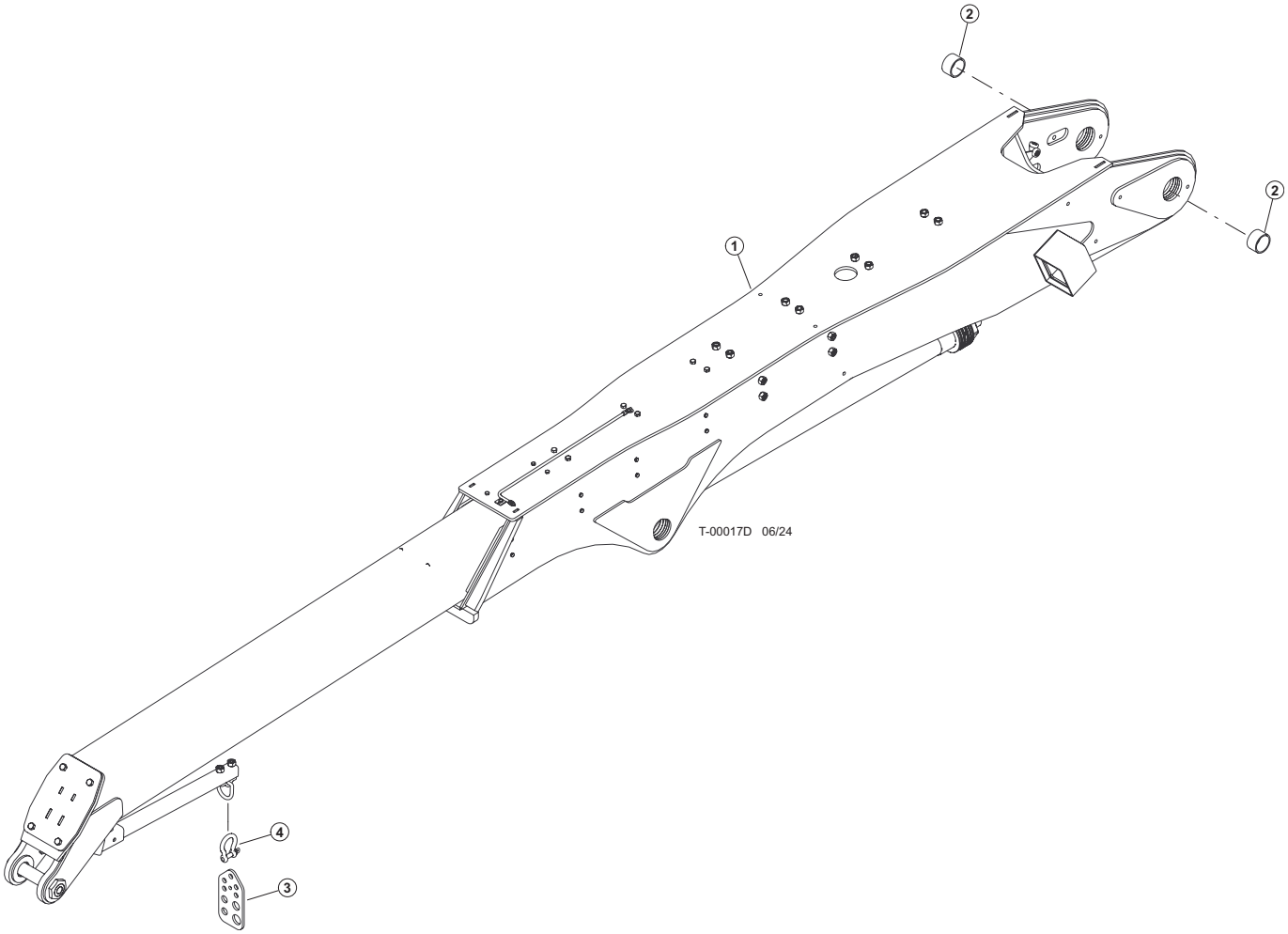

Item	Part #	Description	Qty.
1	60705	BOOM, SQUIRT FELLER BUNCHER - HD D SERIE	1
2	47222	BUSHING, HARVESTER STICK BOOM	2
3	46391	WELDMENT, BULKHEAD DANGLE-UNIVERSAL	1
4	59134	SHACKLE, 1/2”	1

T100-00200 - PROCESSOR SQUIRT BOOM LIGHT INSTALLATION

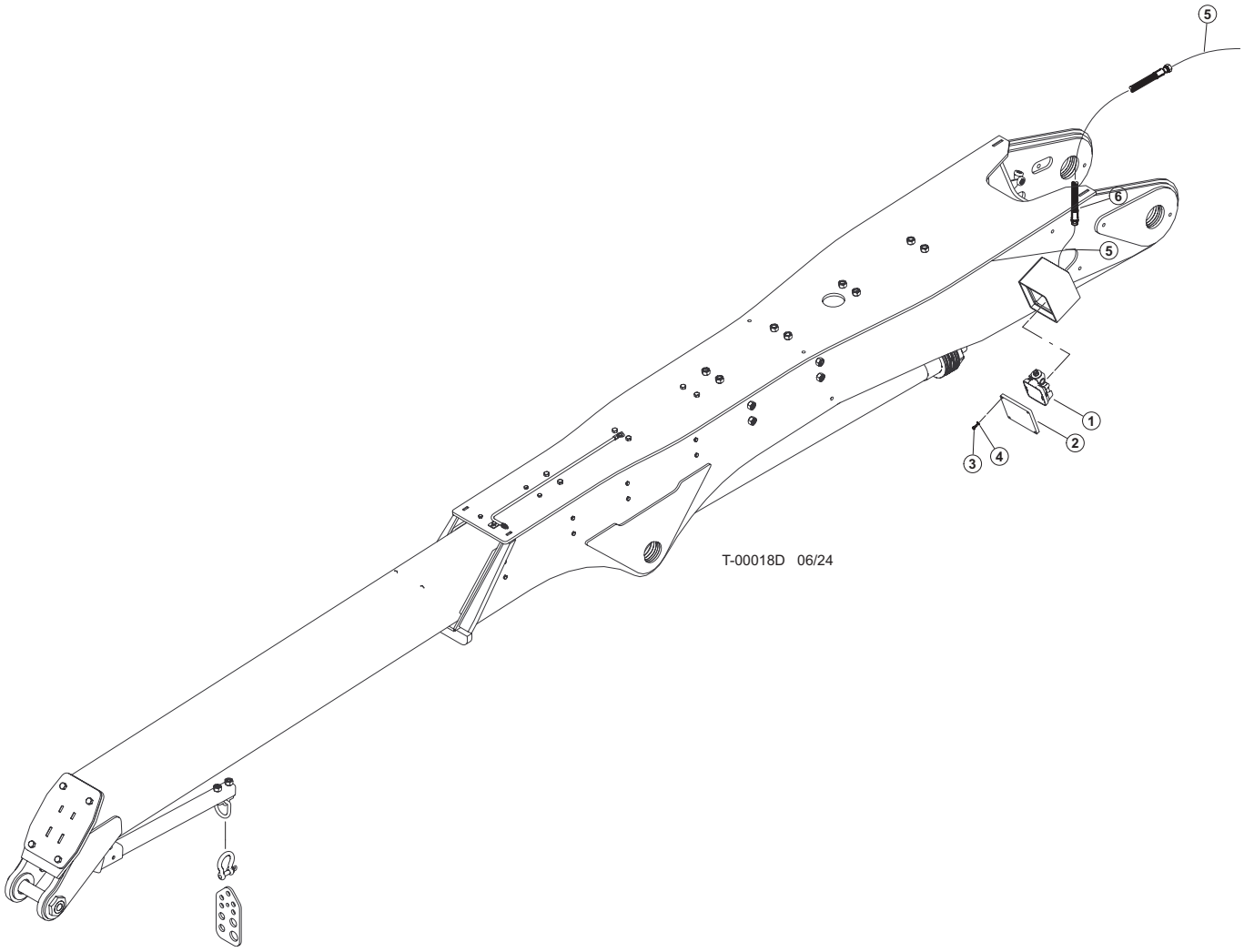

Item	Part #	Description	Qty.
1	53208	LIGHT	1
2	53081	LEXAN, BOOM LIGHT/SWING OUT DOOR B&C SER	1
3	15576	1/4” X 1’ BOLT	4
4	10757	1/4” WASHER	4
5	54065	CABLE	AR
	54065	SOCKET, CONTACT - #2 **(NOT SHOWN)**	1
	53176	CONNECTOR, TERMINAL 16-18G SOLID DEUTSCH	2
	54064	SOCKET, WEDGE LOCK - #2 **(NOT SHOWN)**	1
6	58068 - (KIT)	HOSE ASSY - 387TC84 06-06OS-08PS (STICK BOOM LIGHT CABLE)	1

T100-00201 - PROCESSOR SQUIRT BOOM COMPONENTS

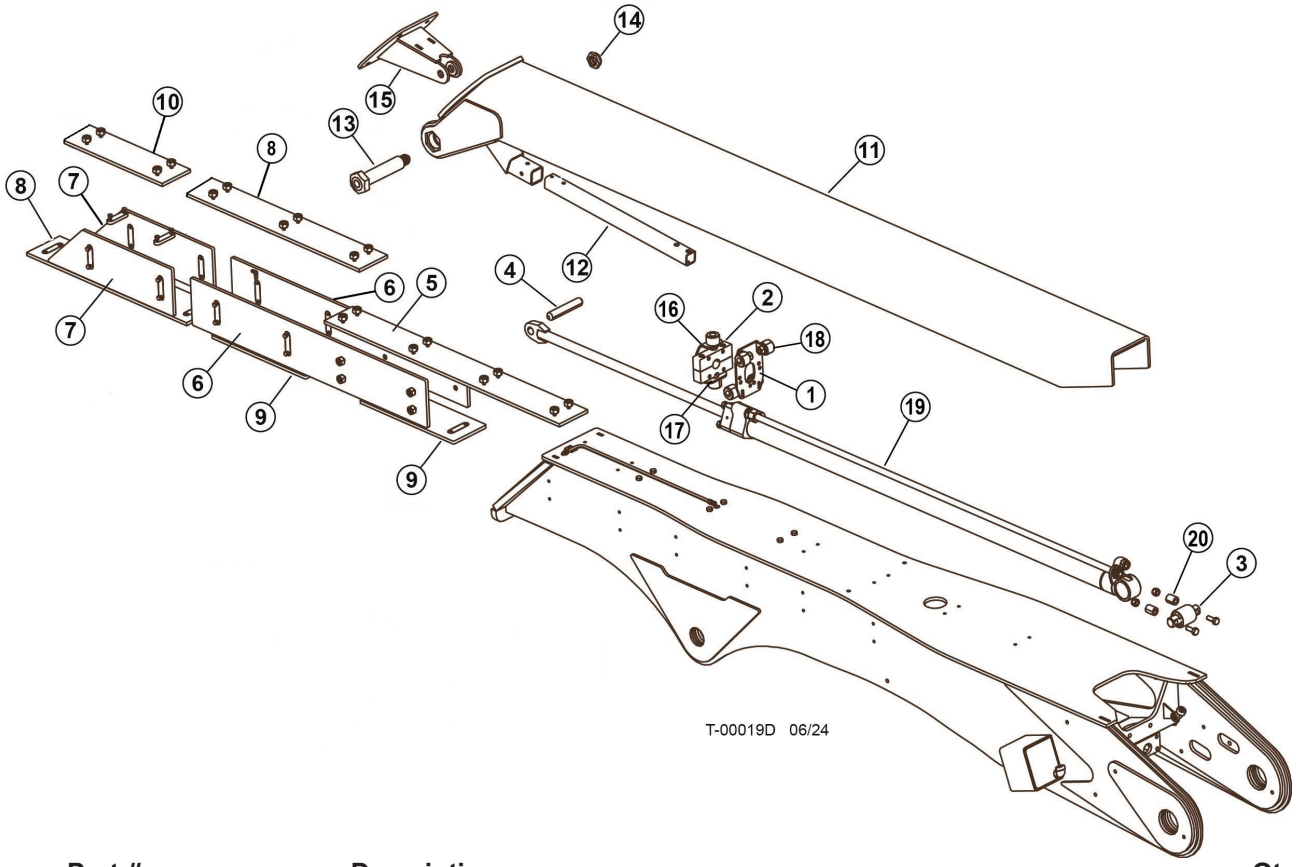

Item	Part #	Description	Qty.
1	56248	BUMPER MOUNT MAIN	1
2	56247	TRUSS/CYL ROD	1
3	**SEE DESRIPTION**	MOUNT BUSHING **(CALL)**	1
4	**SEE DESRIPTION**	PIN **(CALL)**	1
5	21081	WEAR PAD	1
6	56243	WEAR PAD	2
7	21070	WEAR PAD	2
8	XB3014	WEAR PAD	2
9	56239	WEAR PAD	2
10	55569	WEAR PAD	1
11	**SEE DESRIPTION**	INNER SLIDE **(CALL)**	1
12	**SEE DESRIPTION**	TUBE - 2” **(CALL)**	1
13	**SEE DESRIPTION**	PIN **(CALL)**	1
14	**SEE DESRIPTION**	NUT **(CALL)**	1
15	56234	MOUNT, CYL ROD	1
16	XB4084	BUMPER MOUNT UPPER	1
17	XB4083	BUMPER MOUNT LOWER	1
18	55941	BUMPER	6
19	132058B	CYLINDER ASSEMBLY	1
20	56246	SPACERS	2

T100-00202 - PROCESSOR SQUIRT BOOM CYLINDER COMPONENTS

NOTE: APPLY GREASE TO O-RINGS

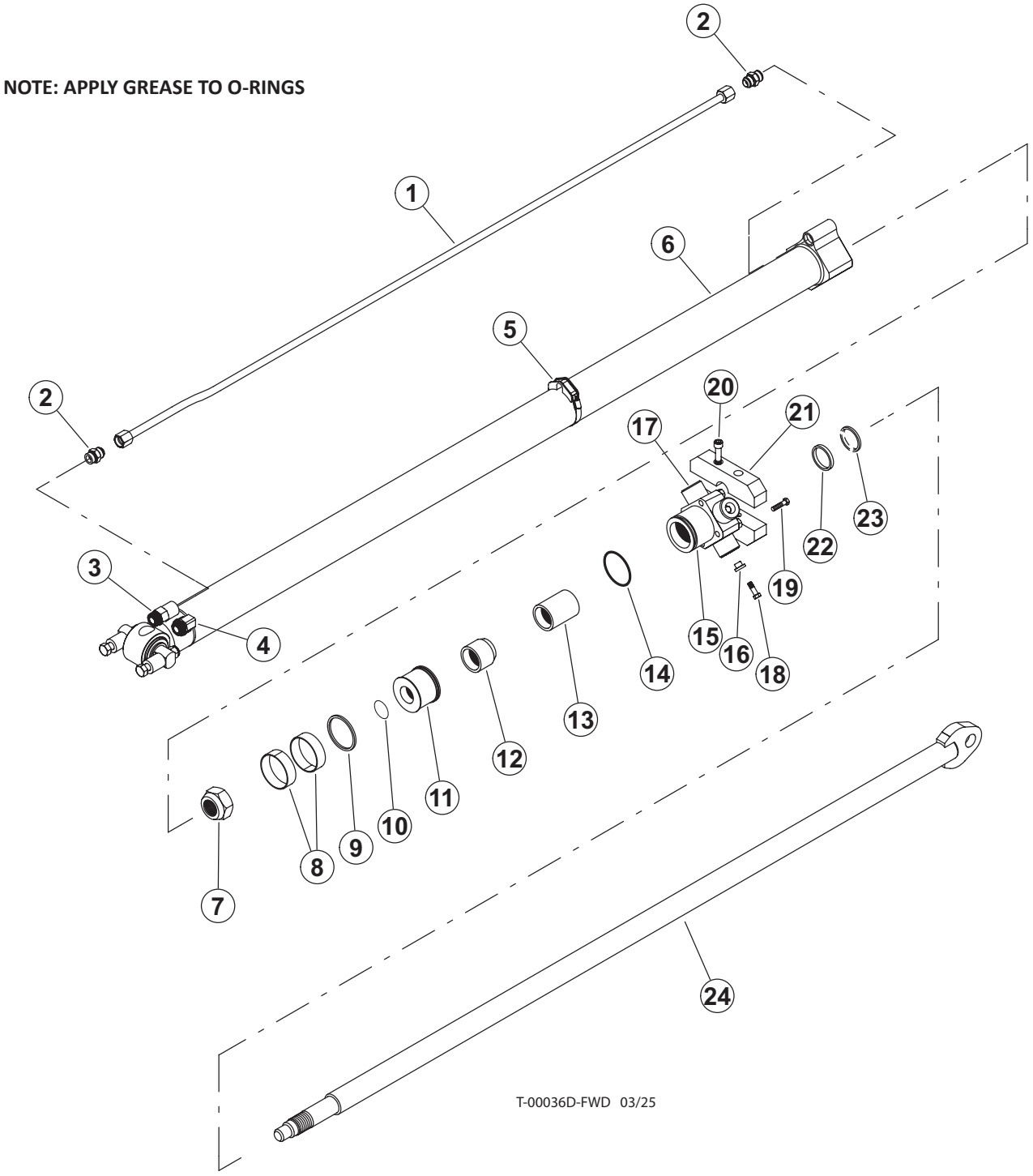

T100-00202 - PROCESSOR SQUIRT BOOM CYLINDER COMPONENTS

Item	Part #	Description	Qty.
	51008	CYLINDER, 6' SQUIRT	1
1	281266A	TRANSFER TUBE	1
2	710785A	CONNNECTOR, STR 10 ORB X 10 JIC	1
3	**SEE DESCRIPTION**	CONNNECTOR, STR **(CALL)**	1
4	**SEE DESCRIPTION**	ELBOW, 90 **(CALL)**	1
5	**SEE DESCRIPTION**	CLAMP **(CALL)**	1
	21028	GROMMET	1
6	51032	BARREL ASSEMBLY	1
7	712118A	NUT	1
8	721197A	RING, PISTON WEAR	1
9	700296A	RING, OISTON SQUARE	1
10	51030	O-RING SLEEVE	1
11	411326B	PISTON	1
12	690680B	CUSHION	1
13	721235A	WEAR RING	1
14	51031	RETAINER SLEEVE	1
15	511294B	PUCK - CYLINDER SUPPORT - 2" OD X .5" THICK (6" SLIDE TUBE)	4
16	**SEE DESCRIPTION**	PUCK, CYLINDER SUPPORT - 2" OD X 1.4" THICK (8" SLIDE TUBE) **(CALL)**	4
17	**SEE DESCRIPTION**	CAPSCREW- .375" X .75" FHCS BRASS (6" SLIDE TUBE) **(CALL)**	4
17	**SEE DESCRIPTION**	CAPSCREW - .375"-16 X 1.5 HEX HEAD GR5" (8" SLIDE TUBE) **(CALL)**	4
18	**SEE DESCRIPTION**	BOLT **(CALL)**	4
18	**SEE DESCRIPTION**	CAP SCREW - .5"-13 X 3.00" SOCKET HEAD	2
19	711206A	CAP SCREW	1
20	**SEE DESCRIPTION**	TRUSS - CYLINDER SUPPORT (8" SLIDE TUBE) **(CALL)**	1
21	**SEE DESCRIPTION**	U-CUP, ROD BEARING **(CALL)**	1
22	701126A	ROD SEAL	1
23	51029	ROD ASSEMBLY	1
24	51033	KIT, SEAL REPAIR - BOOM EXTENSION CYLINDER	1

T100-00210 - STICK BOOM CYLINDER - 130MM BORE

NOTE: HYDRAULIC FITTINGS GET 545 LOCTITE™

NOTE: APPLY GREASE TO O-RINGS

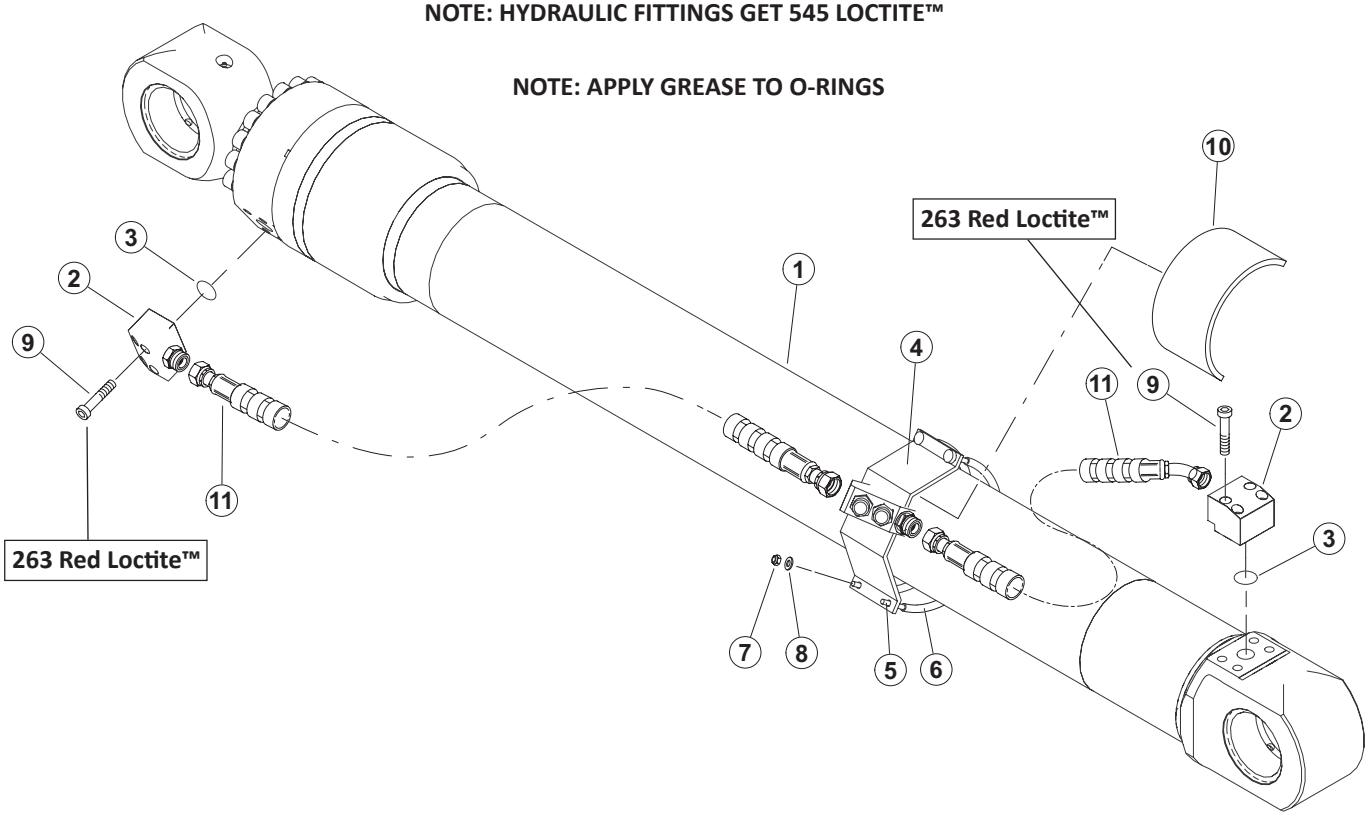

T-00011D 06/24

Item	Part #	Description	Qty.
1	57837	CYLINDER, STICK - FB 130mm	1
2	57601	FLANGE, BLOCK ELBOW W184-16-16U CODE 62	2
3	15377	O-RING - 1” SF (CODE 61/62)	2
4	60521	WELDMENT, CYL STK BARREL 45 DEG	1
5	58031	CABLE, CYLINDER, 15”	2
6	55411	3/8” HEATER HOSE	AR
7	55262	NUT, NYLON INSERT LOCK, 3/8-24	4
8	15528	WASHER, SAE FLAT - .375”	4
9	59149	BOLT - M12-1.75 X 60 Gr 12.9 SHC **263 RED LOCTITE™**	8
10	60653	RUBBER, CYL MANIFOLD MOUNT	1
11	65855	HOSE, HYD, 787TC38 16-16OS-16OS-SW	1
12	65853	HOSE, HYD, 787TC17 16-16OS-16O4-SW	1

T100-00211 - STICK BOOM CYLINDER COMPONENTS - 130MM BORE

NOTE: APPLY GREASE TO O-RINGS

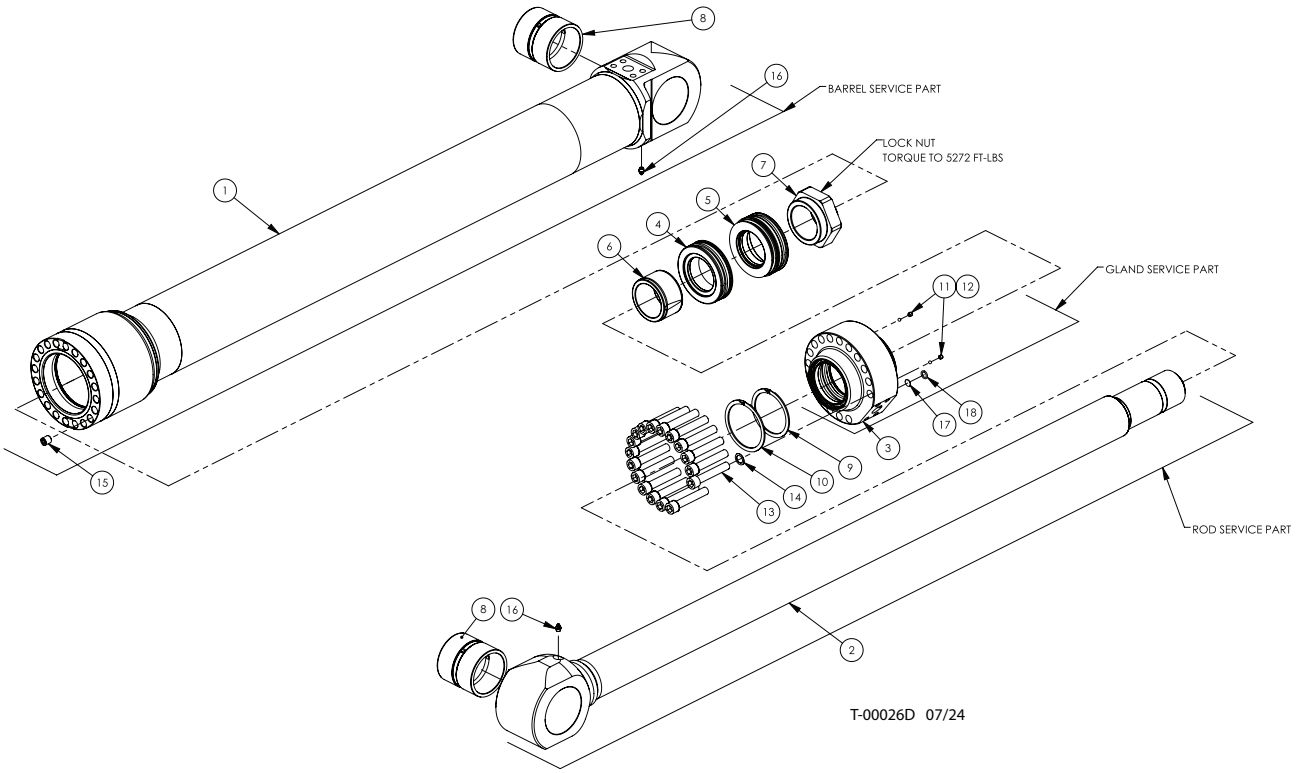

Item	Part #	Description	Qty.
	57837	CYLINDER, STICK BOOM - TRACK 130MM	1
1	TPM130405	BARREL ASSEMBLY	1
2	TPM130405	ROD ASSEMBLY	1
3	TIM130308	GLAND	1
4	TP130109	FRONT PISTON	1
5	TP130110	BACK PISTON	1
7	LNUT M75	LOCKNUT	1
6	TIM130217	CUSHION SLEEVE	1
8	62066	BUSHING	1
9	WHM-400	SPIRAL SNAP RING	2
10	WHM-425	SPIRAL SNAP RING	1
11	SHSS 05-18-0.250	SET SCREW	1
12	62057	STEEL BALL	2
13	SHCS M16 X 90	SHCS METRIC	2
14	HD002049	FLAT WASHER	17
15	SHSS M16X16	SET SCREW	17
16	GREASE 1/8" NPT	GREASE FITTING	1
17	TL-C5-190-30SEE	TEMPERATURE LABEL	2
18	N1470-112SEE	O-RING	1
19	57837-SK	SEAL KIT	1
			1

T100-00220 - STICK BOOM CYLINDER - 140MM BORE

NOTE: HYDRAULIC FITTINGS GET 545 LOCTITE™

NOTE: APPLY GREASE TO O-RINGS

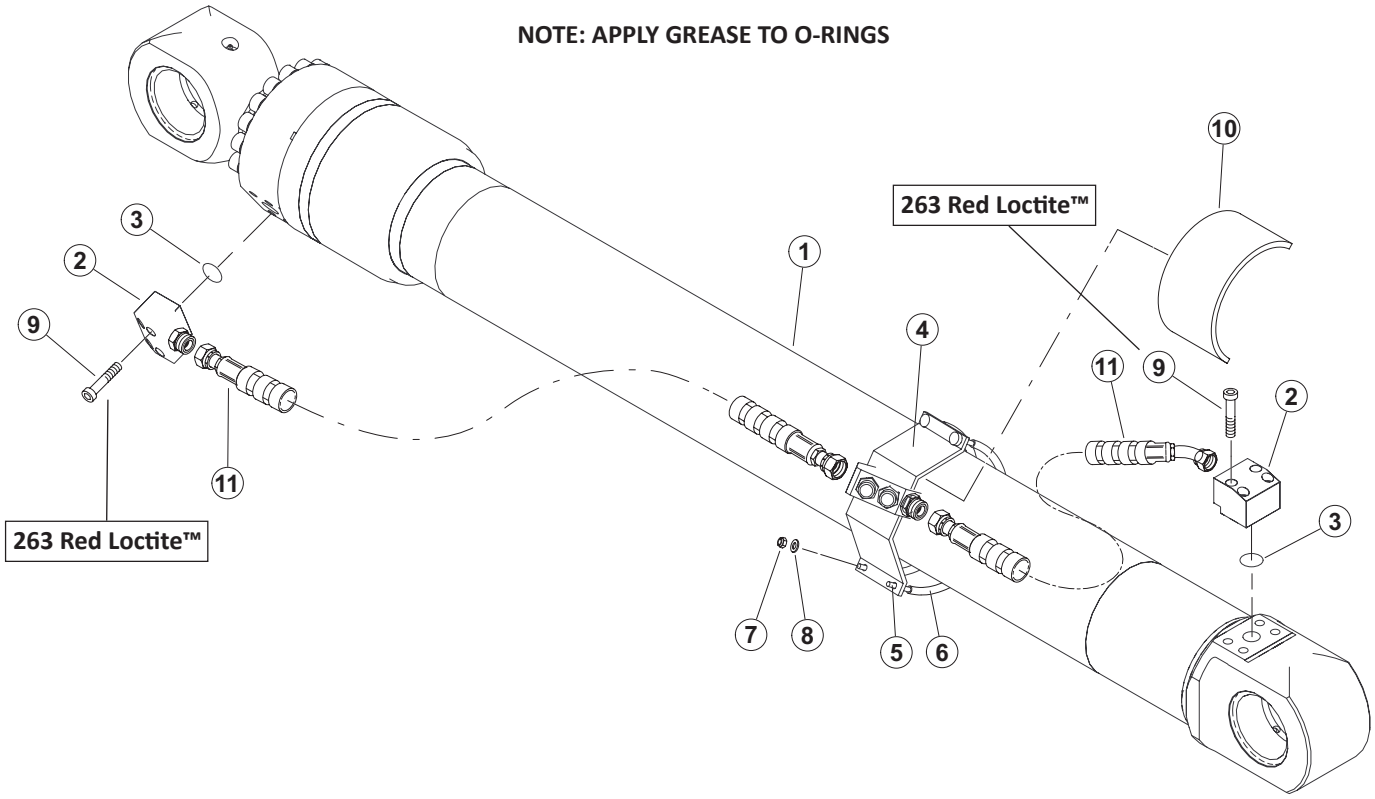

T-00011D 06/24

Item	Part #	Description	Qty.
1	57838	CYLINDER, STICK - 140mm	1
2	57601	FLANGE, BLOCK ELBOW W184-16-16U CODE 62	2
3	15377	O-RING - 1” SF (CODE 61/62)	2
4	60521	WELDMENT, CYL STK BARREL 45 DEG	1
5	58031	CABLE, CYLINDER, 15”	2
6	55411	3/8” HEATER HOSE	AR
7	55262	NUT, NYLON INSERT LOCK, 3/8-24	4
8	15528	WASHER, SAE FLAT - .375”	4
9	59149	BOLT - M12-1.75 X 60 Gr 12.9 SHC **263 RED LOCTITE™**	8
10	60653	RUBBER, CYL MANIFOLD MOUNT	1
11	65855	HOSE, HYD, 787TC38 16-16OS-16OS-SW	1
12	65853	HOSE, HYD, 787TC17 16-16OS-16O4-SW	1

T100-00221 - STICK BOOM CYLINDER COMPONENTS - 140MM BORE

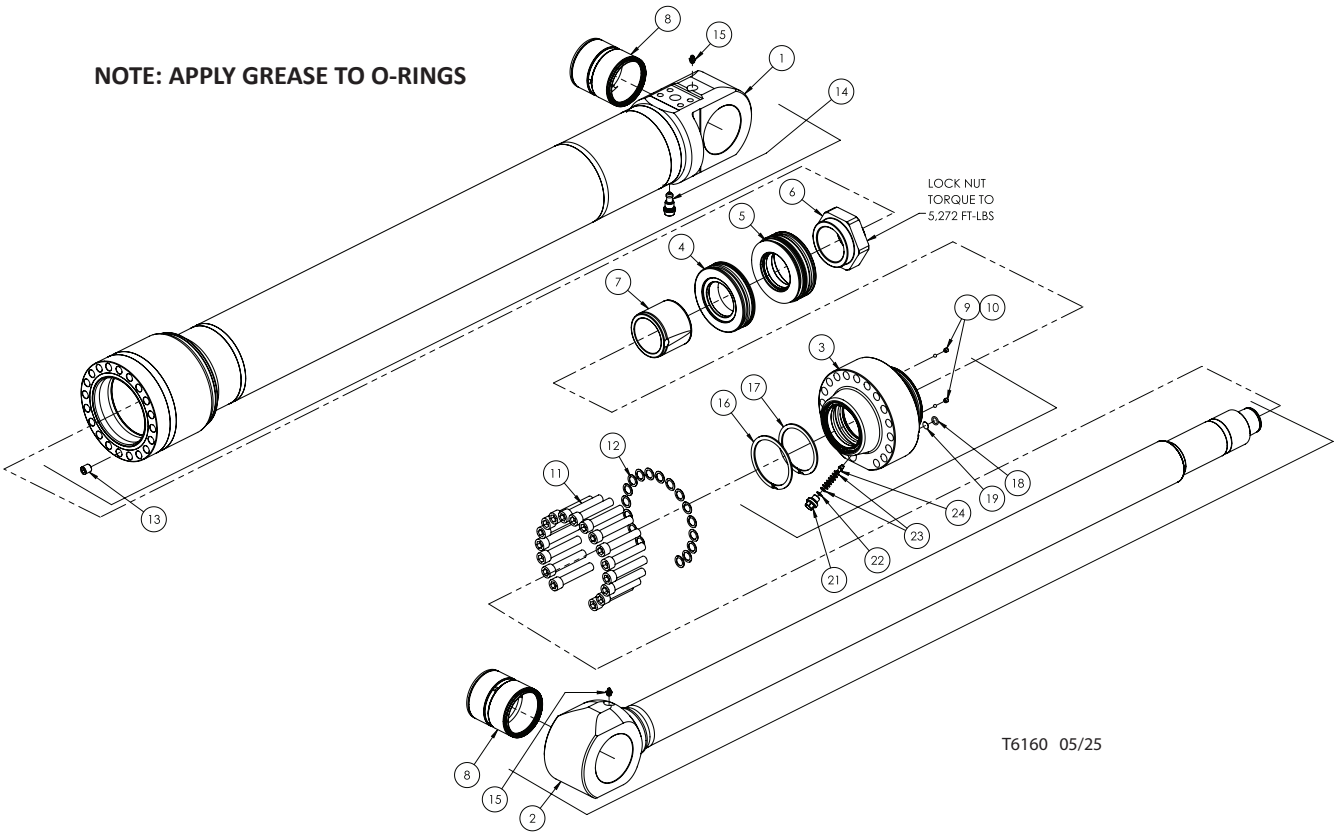

Item	Part #	Description	Qty.
	57838	CYLINDER, STICK BOOM - TRACK 140MM	1
1	TPM140100	BARREL ASSEMBLY	1
2	58293	ROD ASSEMBLY	1
3	TPM140208	GLAND	1
4	TPM140209	FRONT PISTON	1
5	TPM140210	BACK PISTON	1
6	LNUT M75	LOCKNUT	1
7	TIM130317	CUSHION SLEEVE	1
8	62066	BUSHING	2
9	SHSS 05-18-0.250	SET SCREW	2
10	62057	STEEL BALL	2
11	SHCS M16 X 90	SHCS METRIC	17
12	HD002049	FLAT WASHER	17
13	SHSS M16 X 16	SET SCREW	1
14	393000U020	PRESSURE RELIEF w/ANTI CAV 420 BAR (6090 PSI)	1
15	GREASE 1/8" STR	GREASE FITTING	1
16	WHM-425	SPIRAL SNAP RING	2
17	WHM-400	SPIRAL SNAP RING	1
18	N1470 - 112	O-RING	1
19	TL-C5-190-30	TEMPERATURE LABEL	1
20	57838-SK	SEAL KIT	1
21	HD002308	PLUG, RELIEF THREADED, SAE#6 ORB PORT	1
22	0125755	DISC SPRING .492"OD X .244"ID	1
23	0123995	DISC SPRING .500"OD X .255"ID	8
24	HD002306	HIGH PRESSURE SPOOL; SHORT STEM	1

T100-00224 TOOL TILT CYLINDER COMPONENTS - (TANGUAY)

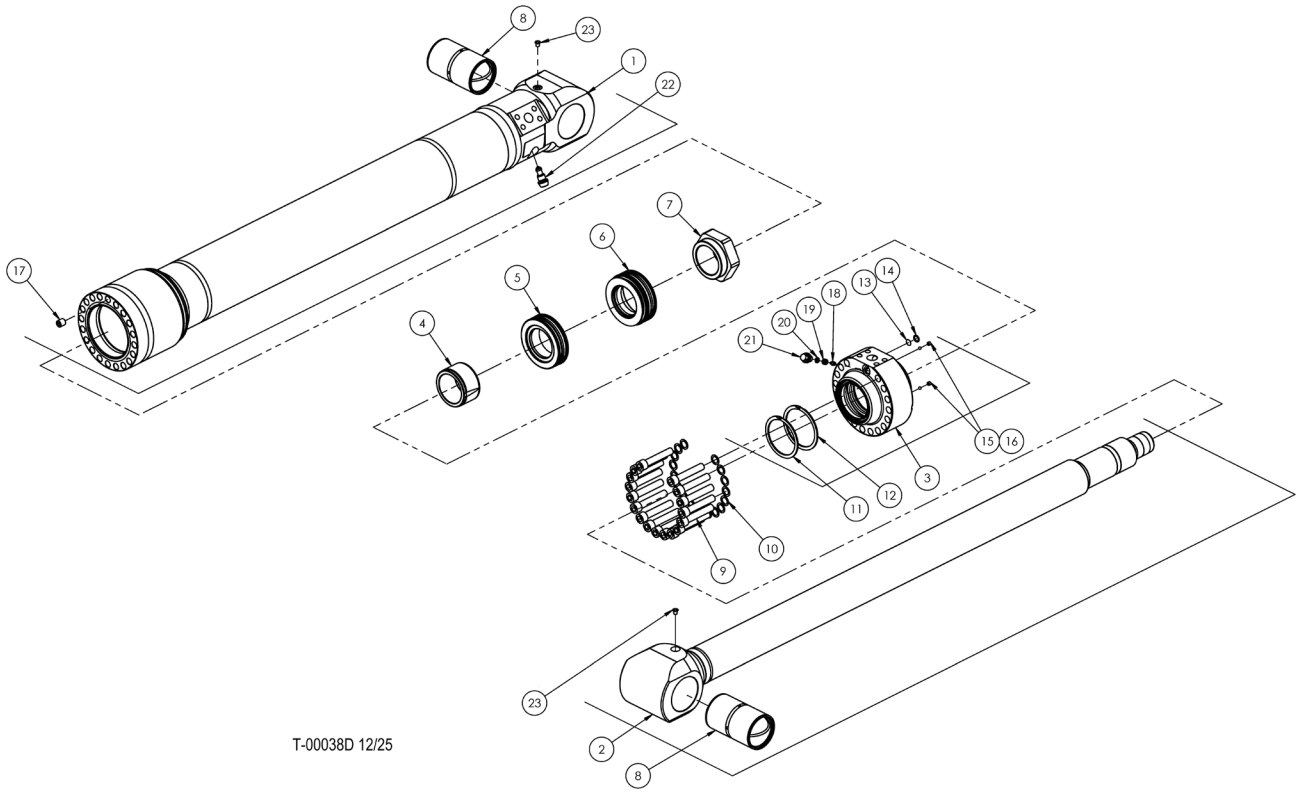

Item	Part #	Description	Qty.
	58101	CYLINDER, TOOL TILT	1
1	TPM130500	BARREL	1
2	59063	ROD	1
3	SK13009000	GLAND	1
4	TIM130308	CUSHION SLEEVE	1
5	TP130109	FRONT PISTON	1
6	TP130110	BACK PISTON	1
7	LNUT M75	LOCK NUT	1
8	TIM130217	BUSHING	2
9	**SEE DESRIPTION**	SHCS METRIC G12.9 **(CALL)**	17
10	**SEE DESRIPTION**	FLAT WASHER **(CALL)**	17
11	**SEE DESRIPTION**	SNAP RING **(CALL)**	1
12	**SEE DESRIPTION**	SNAP RING **(CALL)**	1
13	**SEE DESRIPTION**	TEMP LABEL **(CALL)**	1
14	**SEE DESRIPTION**	O-RING **(CALL)**	1
15	**SEE DESRIPTION**	SET SCREW **(CALL)**	2
16	**SEE DESRIPTION**	STEEL BALL **(CALL)**	2
17	**SEE DESRIPTION**	SET SCRCEW **(CALL)**	1
18	**SEE DESRIPTION**	HIGH PRESSURE SPOOL; SHORT STEM **(CALL)**	1
19	**SEE DESRIPTION**	DISC SPRING **(CALL)**	8
20	**SEE DESRIPTION**	DISC SPRING **(CALL)**	1
21	**SEE DESRIPTION**	PLUG, RELIEF THREADED **(CALL)**	1
22	**SEE DESRIPTION**	PRESSURE RELIEF w/ANTI CAV **(CALL)**	1
23	**SEE DESRIPTION**	PLUG **(CALL)**	2
*	**SEE DESRIPTION**	SEAL KIT **(CALL)**	1

T100-00230 - STICK BOOM CYLINDER AND CYLINDER INSTALLATION

FELLER BUNCHER AND HARVESTOR BOOM

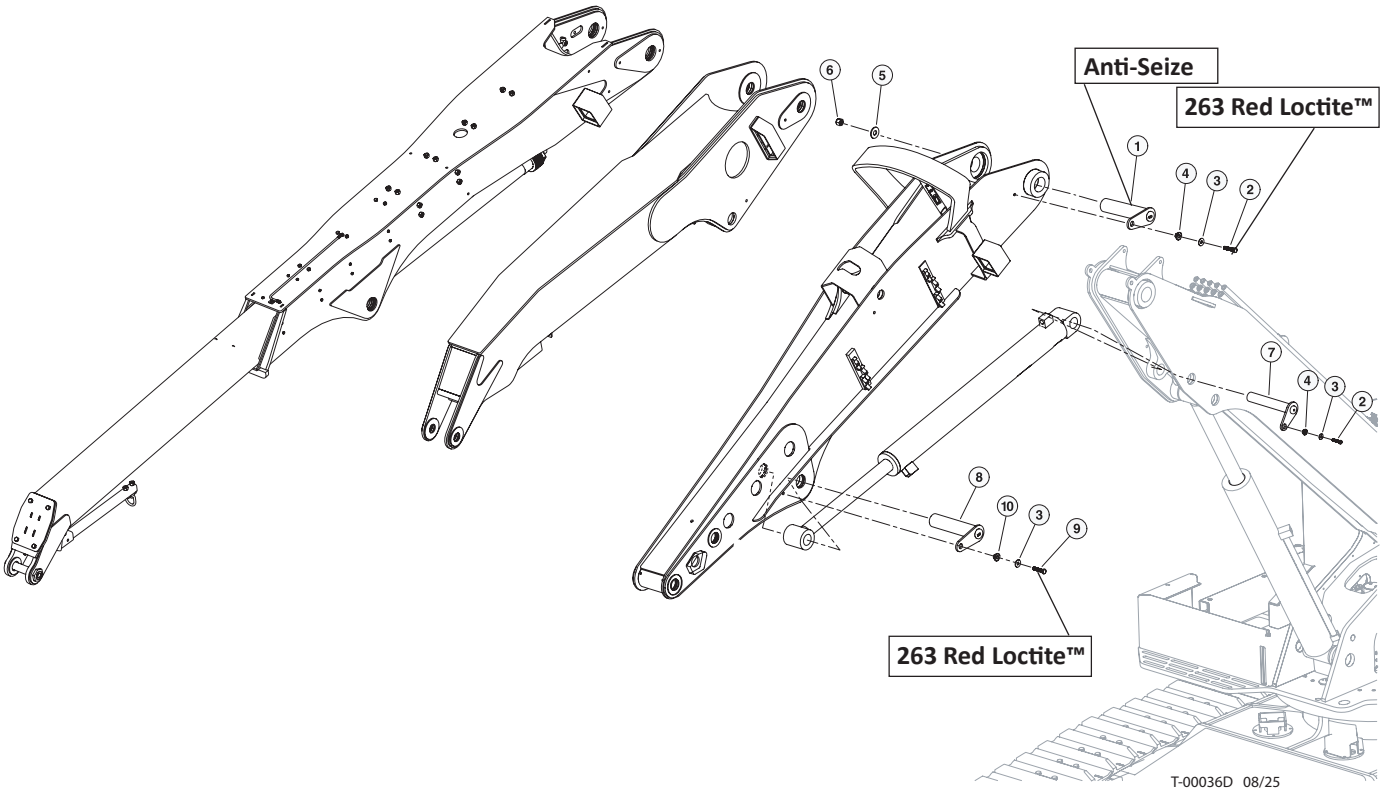

Item	Part #	Description	Qty.
1	51644	PIN ASSEMBLY, 3.50 DIA X 21.06 (2” NUT) **ANTI-SEIZE**	1
2	10775	BOLT - 3/4” x 2.5” **263 RED LOCTITE™**	2
3	15550	WASHER, SAE flat - 3/4”	3
4	54136	WASHER, pin retaining	2
5	19384	WASHER, burned	1
6	10728	NUT, nylock - 2”	1
7	60303	PIN ASSEMBLY, 3.50 DIA X 21.06	1
8	60308	PIN ASSY, 90MM X 12.25” (ROD STICK CLY)	1
9	15549	BOLT - .75” X 2.0 **263 RED LOCTITE™**	1
10	18570	WASHER, PIN RETAINING	1

T200-00100 - STICK BOOM CYLINDER HYD FLANG BLOCKS - TANGUAY

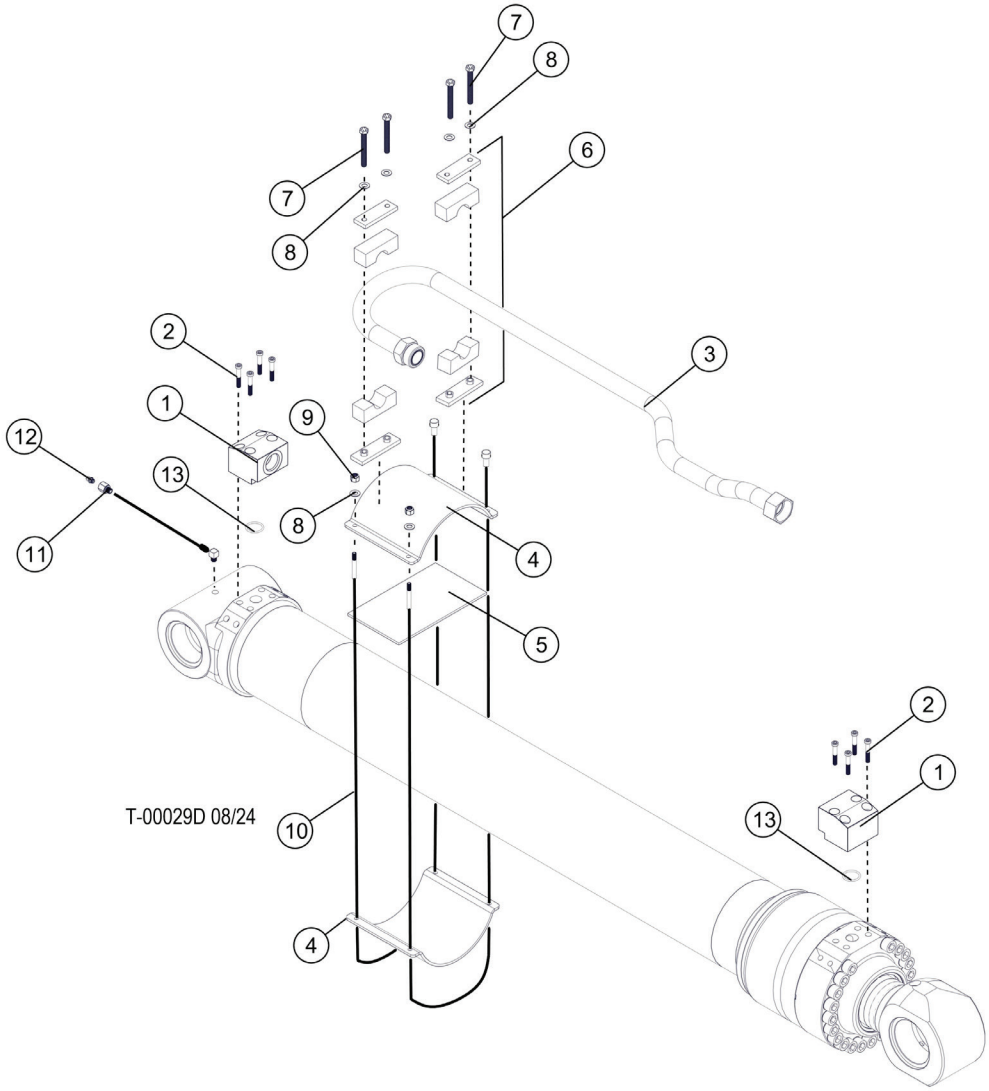

Item	Part #	Description	Qty.
1	57601	FLANGE, BLOCK ELBOW W184-16-16U CODE 62	2
2	59149	BOLT - M12-1.75 X 60 Gr 12.9 SHC	8
3	60892	TUBELINE, STICK BOOM CYLINDER	1
4	48481	PLATE	2
5	60653	RUBBER, CYL MANIFOLD MOUNT	1
6	52372	CLAMP, STEEL TUBELINES(WHEEL DRIVE)SMALL	2
7	10750	BOLT - .375” X 3”	4
8	15528	WASHER, SAE FLAT - .375”	2
9	58190	NUT, HEX, 3/8-24, Gr8	4
10	58031	CABLE, CYLINDER, 15” - FRWDR HYDRADYNE	2
11	52431	COUPLING, PIPE	1
12	59122	ZERK, GREASE - 1/8-27 NPTF, ST	1
13	15377	O-RING - 1” SF (CODE 61/62)	

T200-00105 ARM CYLINDER COMPONENTS - (TANGUAY HD)

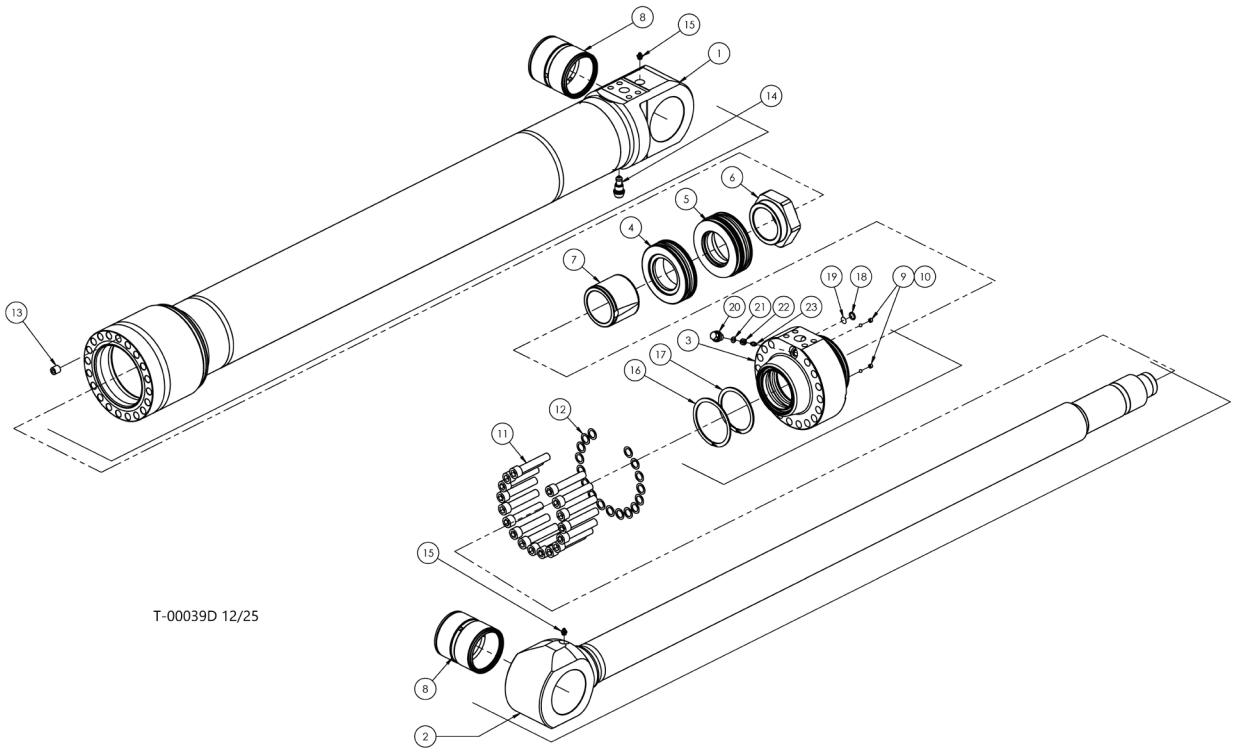

Item	Part #	Description	Qty.
	60980	CYLINDER, ARM	1
1	**SEE DESRIPTION**	BARREL FINAL WELDMENT **(CALL)**	1
2	60981	ROD ASSEMBLY	1
3	**SEE DESRIPTION**	GLAND **(CALL)**	1
4	60982	FRONT PISTON	1
5	**SEE DESRIPTION**	BACK PISTON **(CALL)**	1
6	60983	LOCK NUT	1
7	**SEE DESRIPTION**	CUSHION SLEEVE **(CALL)**	1
8	60984	BUSHING	2
9	**SEE DESRIPTION**	SET SCREW **(CALL)**	2
10	60985	STEEL BALL	2
11	**SEE DESRIPTION**	SHCS METRIC G12.9 **(CALL)**	17
12	60986	FLAT WASHER	17
13	**SEE DESRIPTION**	SET SCRCEW **(CALL)**	1
14	60987	PRESSURE RELIEF w/ANTI CAV	1
15	**SEE DESRIPTION**	GREASE FITTING **(CALL)**	2
16	60988	SNAP RING	1
17	**SEE DESRIPTION**	SNAP RING **(CALL)**	1
18	60989	O-RING	1
19	**SEE DESRIPTION**	TEMP LABEL **(CALL)**	1
20	60990	PLUG, RELIEF THREADED	1
21	**SEE DESRIPTION**	DISC SPRING **(CALL)**	8
22	60991	DISC SPRING	1
23	**SEE DESRIPTION**	HIGH PRESSURE SPOOL; SHORT STEM **(CALL)**	1
*	60992	SEAL KIT	1

T200-00100 - STICK BOOM CYLINDER HYD FLANG BLOCKS - TANGUAY

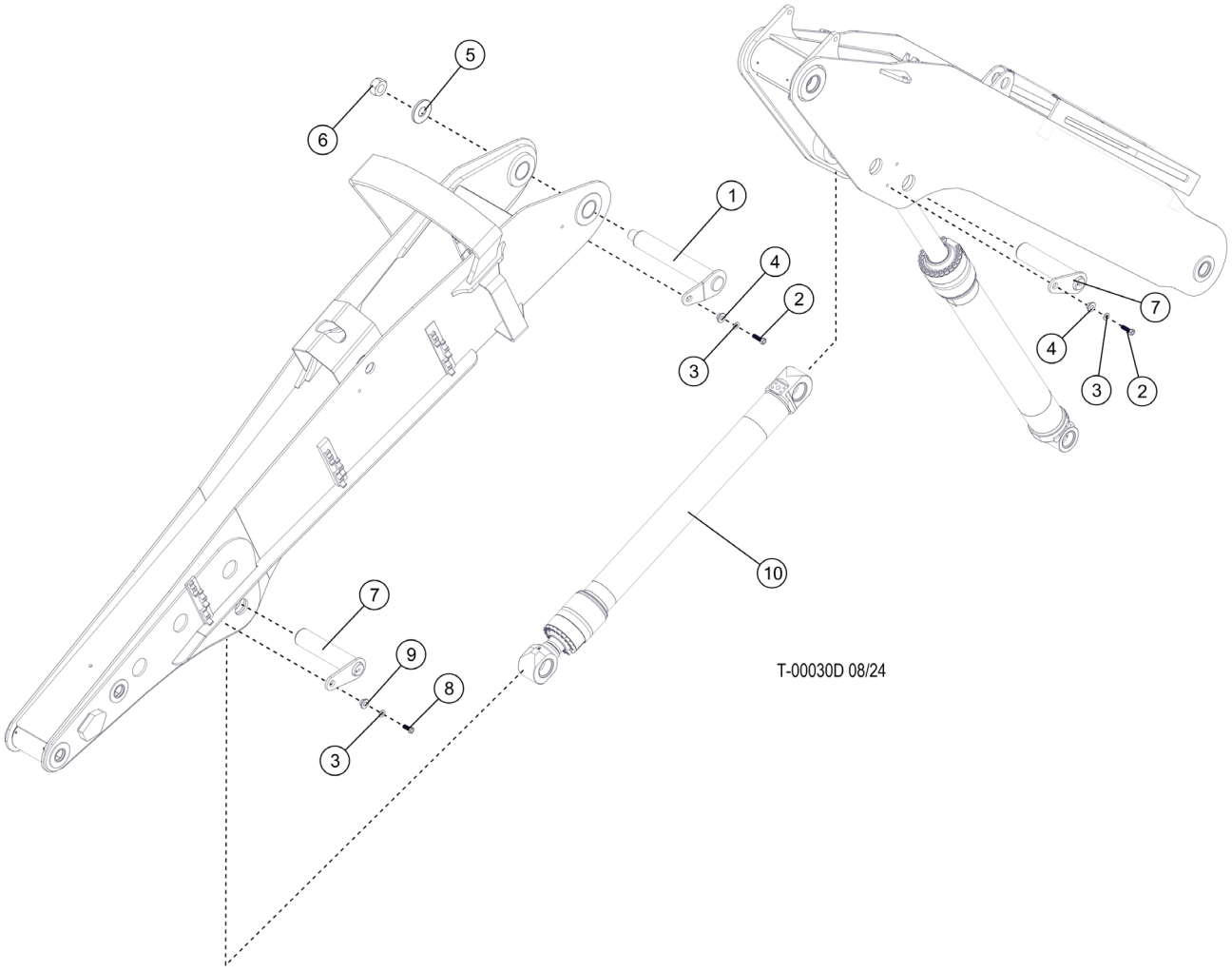

T200-00100 - STICK BOOM CYLINDER HYD FLANG BLOCKS - TANGUAY

Item	Part #	Description	Qty.
1	51644	PIN ASSEMBLY, 3.50 DIA X 21.06 (2” NUT)	1
2	10775	BOLT - 3/4” x 2.5”	2
3	15550	WASHER, SAE flat - 3/4”	3
4	54136	WASHER, pin retaining	2
5	19384	WASHER, burned	1
6	10728	NUT, nylock - 2”	1
7	60303	PIN ASSY, 90MM X 15.5” (ROD MAIN/BASE ST	2
8	15549	BOLT - .75” X 2.0	1
9	18570	WASHER, PIN RETAINING	1
10	60980	CYLINDER, STICK - TANGUAY (POWER) BOOM	1

MARKS AND PLATES - (U)

U100-00021 - MODEL DECAL TL755D

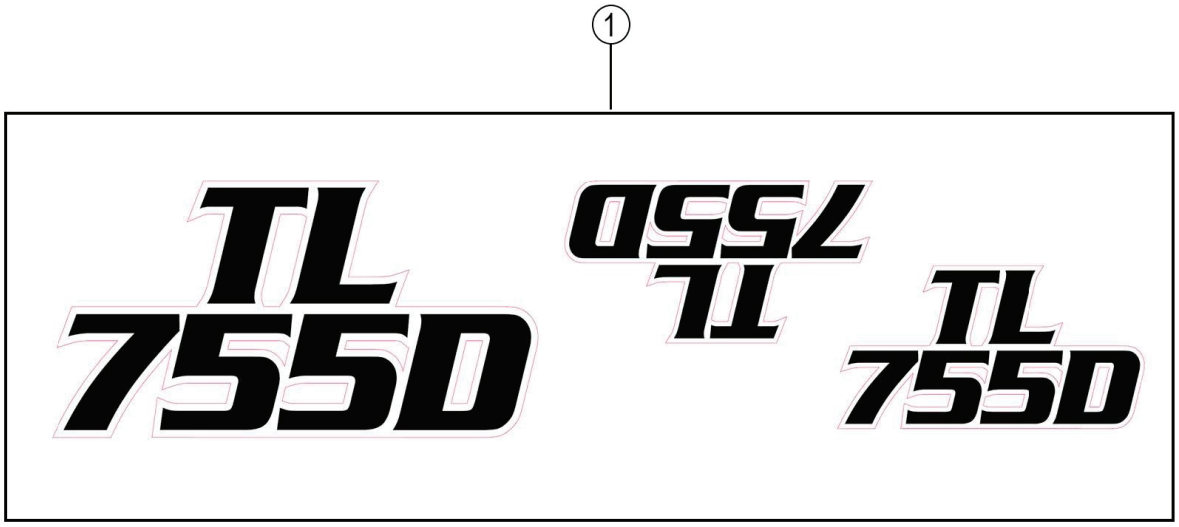

U-00011D 08/24

Item	Part #	Description	Qty.
1	57887	DECAL, MODEL # - TL755-D	1

U100-00021 - MODEL DECAL TN755D

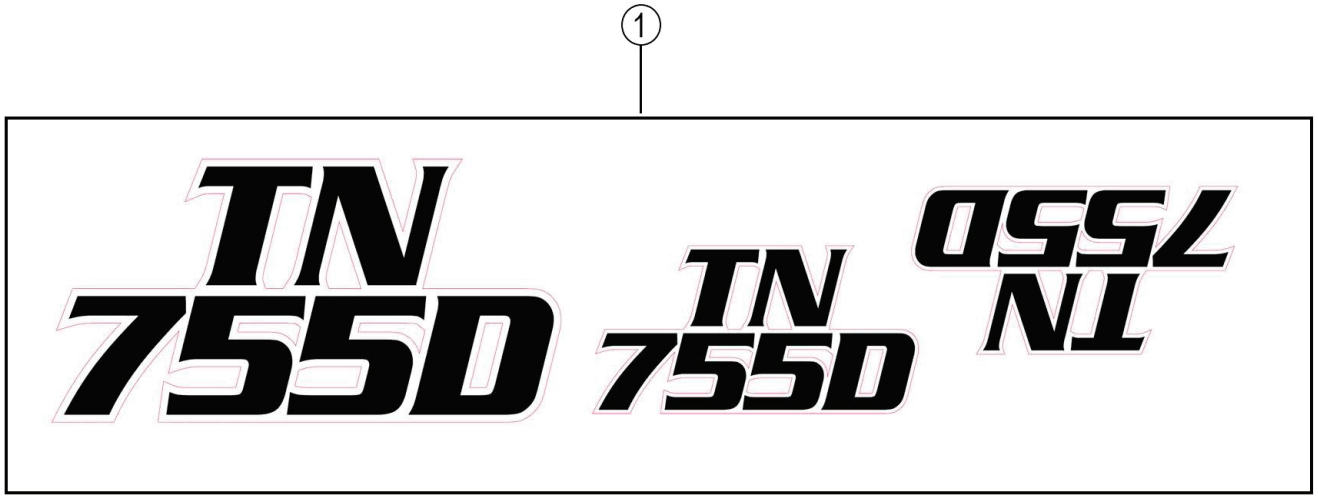

U-00012D 08/24

Item	Part #	Description	Qty.
1	57914	DECAL, MODEL # - TN755-D	1

U100-00021 - MODEL DECAL TL755D

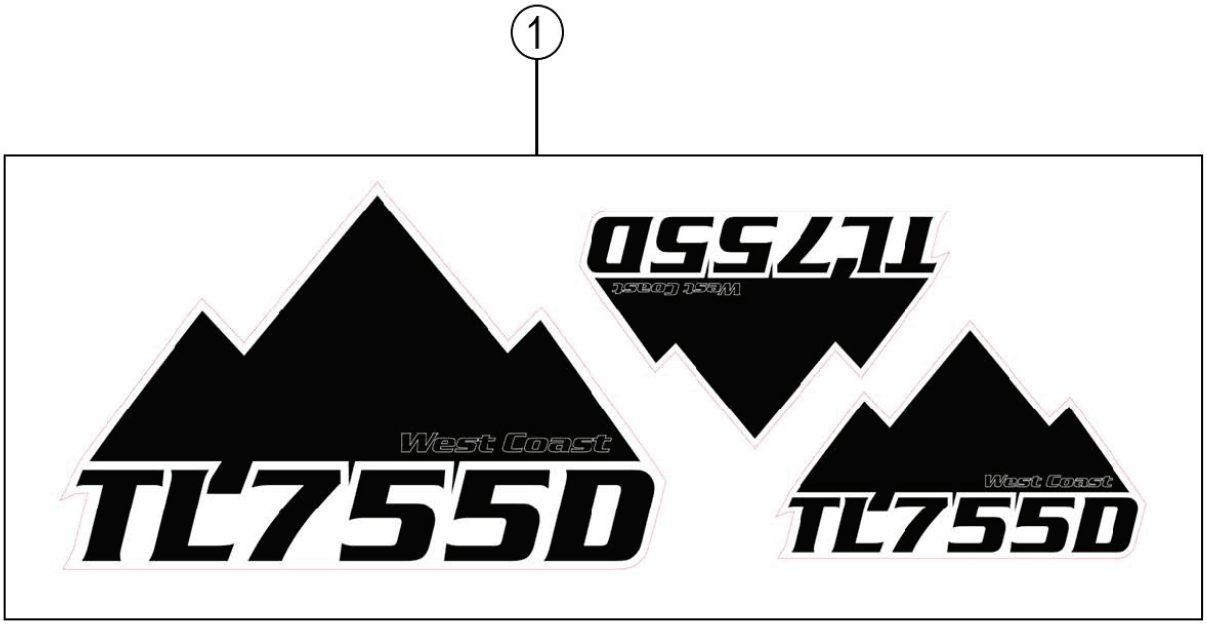

U-00013D 08/24

Item	Part #	Description	Qty.
1	59037	DECAL, MODEL # - TN755-D WEST COAST	1

U100-00022- BOOM, DECALS

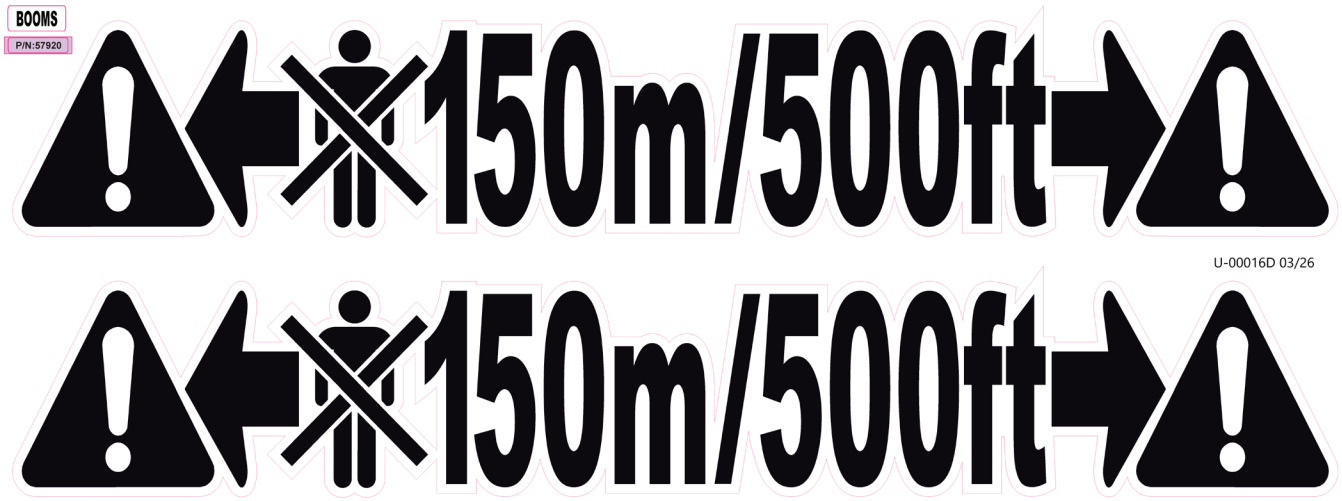

Item	Part #	Description	Qty.
1	57920	DECAL, BOOM UNIVERSAL KEEP CLEAR	1

U100-00023 - GULLWING, DECALS



Item	Part #	Description	Qty.
1	57628	DECAL, KEEP CLEAR GULLWING	1

U100-00024 - LOGO & WEB



Item	Part #	Description	Qty.
1	57908	DECAL, LOGO & WEB	1

U100-00025 - DECAL, DASH

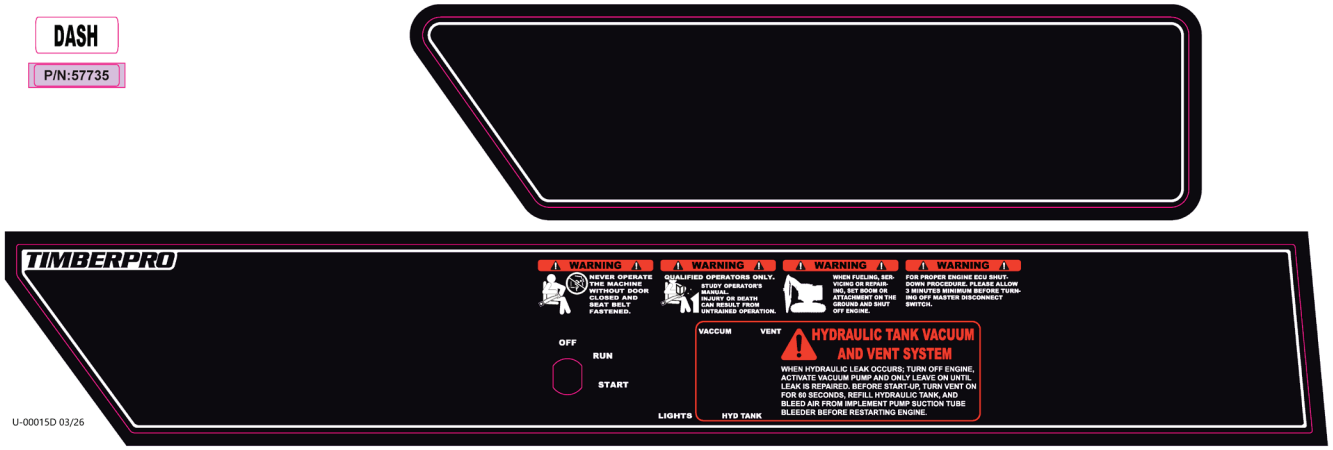

Item	Part #	Description	Qty.
1	57735	DASH, DECAL - D SERIES, ENGLISH	1
1	57735-FR	DASH, DECAL - D SERIES, FRENCH	1
1	57735-GR	DASH, DECAL - D SERIES, GERMAN	1
1	57735-PT	DASH, DECAL - D SERIES, PORTUGUESE	1
1	57735-SP	DASH, DECAL - D SERIES, SPANISH	1

U100-00026 - CAB DECALS

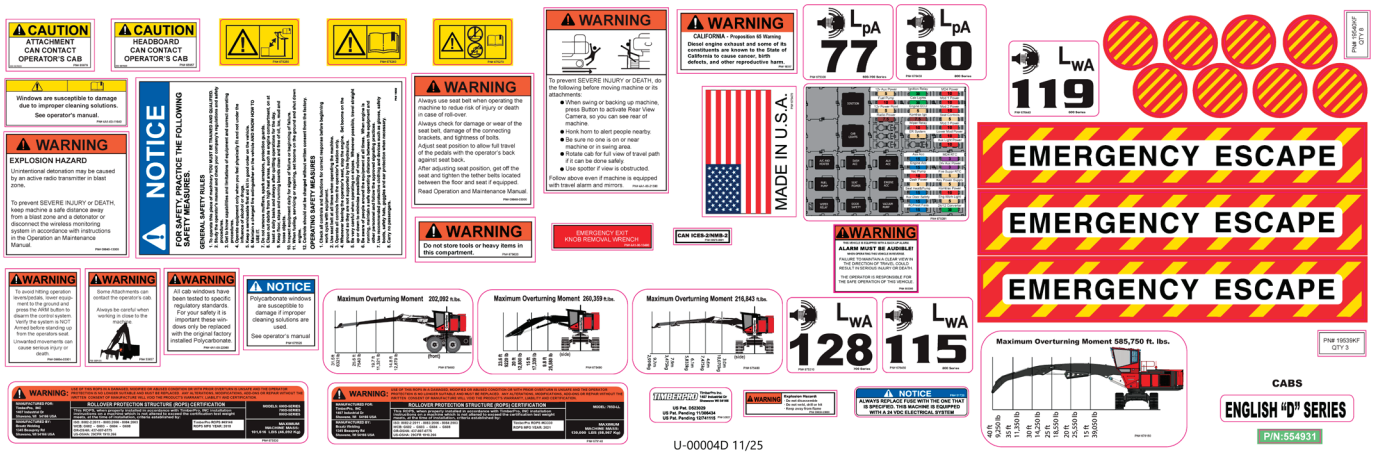

Item	Part #	Description	Qty.
1	554931	KIT, DECAL - D SERIES COMPLETE ENGLISH, CAB	1
1	554931-FR	KIT, DECAL - D SERIES COMPLETE FRENCH, CAB	1
1	554931-GR	KIT, DECAL - D SERIES COMPLETE GERMAN, CAB	1
1	554931-PT	KIT, DECAL - D SERIES COMPLETE PORTUGUESE, CAB	1
1	554931-SP	KIT, DECAL - D SERIES COMPLETE SPANISH, CAB	1

U100-00028 - OUTSIDE DECALS



Item	Part #	Description	Qty.
1	579560	KIT, DECAL - D SERIES COMPLETE, ENGLISH	1
1	579560-FR	KIT, DECAL - D SERIES COMPLETE, FRENCH	1
1	579560-GR	KIT, DECAL - D SERIES COMPLETE, GERMAN	1
1	579560-PT	KIT, DECAL - D SERIES COMPLETE, PORTUGUESE	1
1	579560-SP	KIT, DECAL - D SERIES COMPLETE, SPANISH	1

U100-00060 - SERIAL PLATE



U-00010D 07/24

Item	Part #	Description	Qty.
1	58964	PLACARD, SERIAL NUMBER - USA/CANADA	1

MISCELLANEOUS- (W)

W100-00010 - ESPAR HEATER

NOTE: HYDRAULIC FITTINGS GET 545 LOCTITE™

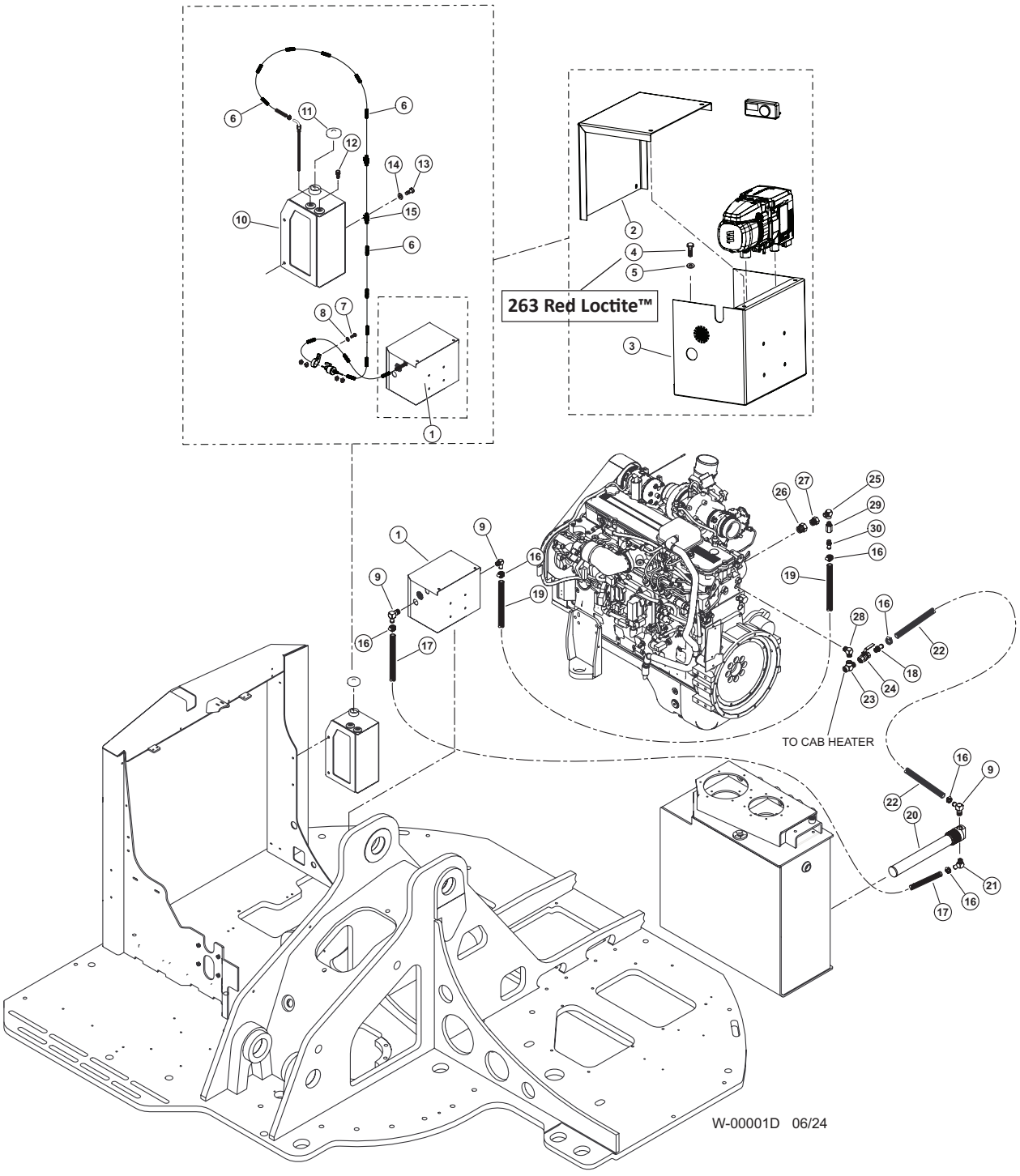

W100-00010 - ESPAR HEATER

Item	Part #	Description	Qty.
1	61249	PREHEATER, ESPAR	1
2	60727	LID, ESPAR	1
3	60726	BOX, ESPAR MOUNT	1
4	15589	BOLT - .3125” X 1” **263 RED LOCTITE™**	4
5	10801	WASHER, FLAT - .3125”	4
6	16705	LOOM, SPLIT - .25” GREEN (BULK)	AR
7	15604	BOLT - .25” X .75”	2
8	10800	WASHER, FLAT - .25”	2
9	52436	ELBOW, 90 BEADED HOSE BARB 10-8	3
10	46673	TANK, ESPAR FUEL - C/D SERIES	1
11	52965	CAP, WEBASTO/ESPAR FUEL TANK-REPAIR	1
12	22906	BREATHER, FUEL TANK	1
13	15542	BOLT - .375” X .75”	2
14	15528	WASHER, SAE FLAT - .375” OR 3/8”	2
15	59128	CABLE CLAMP, CUSHIONED, 1/2” (.406”)	2
16	58977	CLAMP, HOSE - AC UPDATE	1
17	58123	HOSE, HEATER 5/8 X 94 D-MOD ESPAR	1
	20810	SLEEVE, PROTECTIVE HOSE - 075	1
18	51774	CONNECTOR, STR HOSE BARB - .5 X 5/8 (830	1
19	58024	HOSE, HEATER - 5/8” X 64” (GATES 28473)	1
	50188	SLEEVE, PROTECTIVE HOSE - 150	1
20	51614	HEATER, ELEMENT 16” HYD TANK-TRANSPORT	1
21	57805	FITTING, 179HB-10-8	1
22	52738	HOSE, HEATER - 5/8” X 80” WRAPPED	1
23	51879	TEE, RUN - .5” (1/2 MR0-S)	1
24	51714	VALVE, BALL - WATER SHUT OFF HEATER 1/2”	1
25	52786	ELBOW, 90° STREET -½ X 3/8 CD-S	1
26	701600	BUSHING, REDUCER	1
27	51780	BUSHING, REDUCER - 12-1/2 FILL PUMP (830	1
28	52785	ELBOW, MALE PIPE - ¾ X ½ CR-S	1
29	15652	VALVE, CHECK - HYDRAULIC/FUEL	1
30	51502	NIPPLE, KING - .38NPT X .63 HOSE	1

W100-00011 - ESPAR HEATER COMPONENTS

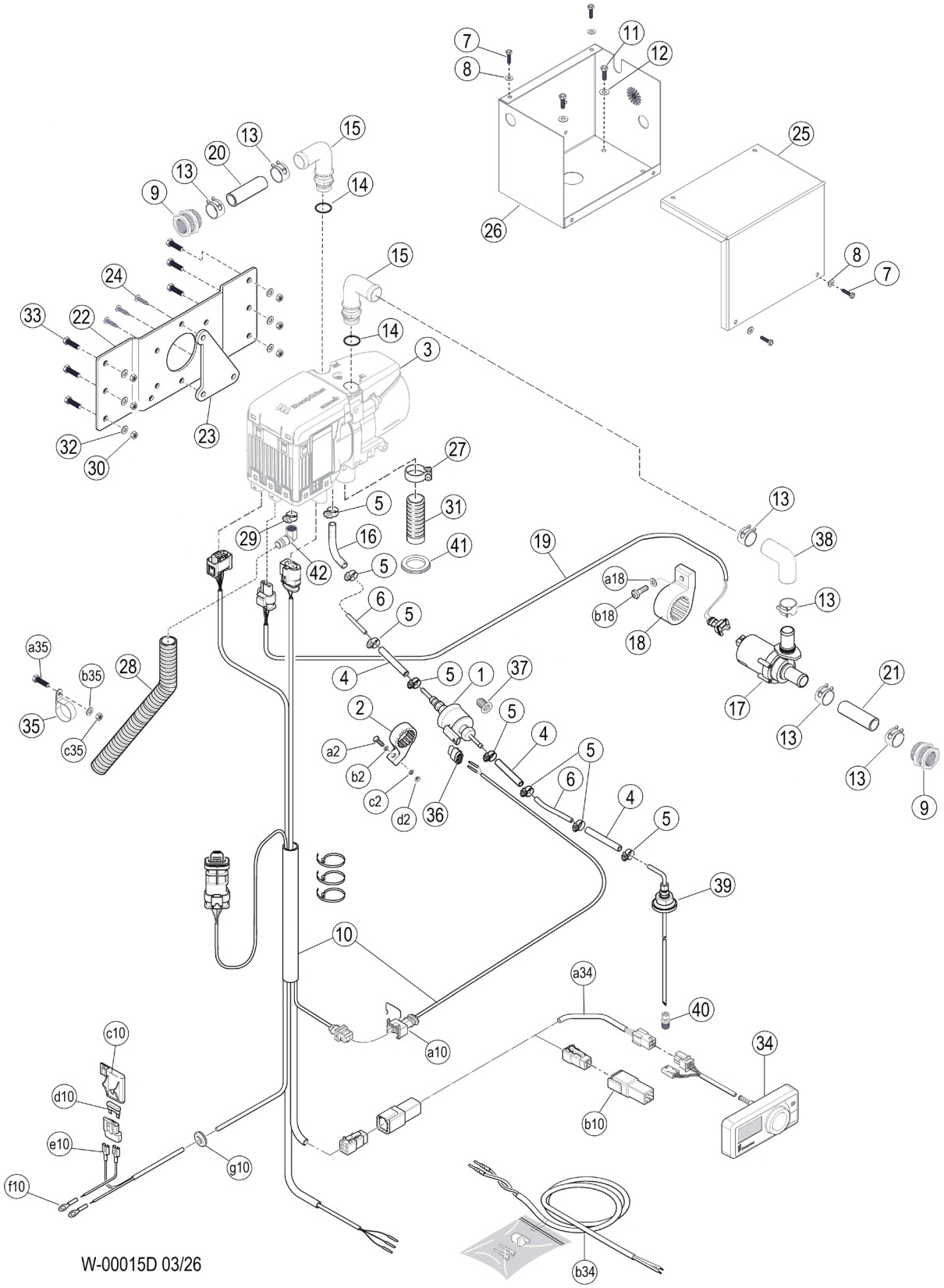

W100-00011 - ESPAR HEATER COMPONENTS

Item	Part #	Description	Qty.
1	56569	FUEL METERING PUMP, 24 V	1
2	705520	FMP MOUNT BRACKET	1
a2	-	a = INCLUDED WITH PRIMARY NUMBER	1
b2	-	b = INCLUDED WITH PRIMARY NUMBER	1
c2	-	c = INCLUDED WITH PRIMARY NUMBER	1
d2	-	d = INCLUDED WITH PRIMARY NUMBER	1
3	56401	D6 HEATER ASSEMBLY	1
4	53437	HOSE 3.5MM X 301MM	3
5	702480	HOSE CLIP, 9 MM	8
6	705530	PIPE, 4 X 1 VW TL 524 35-A, BLACK	2
7	23264	BOLT - .25" X .5"	4
8	10800	WASHER, FLAT - .25"	4
9	705310	COOLANT BULK HEAD FITTING	2
10	705320	CABLE HARNESS	1
a10	-	a = INCLUDED WITH PRIMARY NUMBER	1
b10	-	b = INCLUDED WITH PRIMARY NUMBER	1
c10	-	c = INCLUDED WITH PRIMARY NUMBER	1
d10	-	d = INCLUDED WITH PRIMARY NUMBER	1
e10	-	e = INCLUDED WITH PRIMARY NUMBER	2
f10	-	f = INCLUDED WITH PRIMARY NUMBER	2
g10	-	g = INCLUDED WITH PRIMARY NUMBER	1
11	15589	BOLT - .3125" X 1"	2
12	10801	WASHER, FLAT - .3125"	2
13	705330	CLAMPS, CONSTANT TENSION	6
14	700030	O-RING, 16 X 2	2
15	700110	90 DEGREE ELBOW W/O-RING	2
16	53469	ADAPTER HOSE 4.5 / 3.5 MM	1
17	55988	WATER PUMP 24V	1
18	705490	BRACKET WATER PUMP	1
a18	-	a = INCLUDED WITH PRIMARY NUMBER	1
b18	-	b = INCLUDED WITH PRIMARY NUMBER	1
19	705340	WATER PUMP WIRE HARNESS	1
20	705350	5" COOLANT HOSE	1
21	705360	2.75" COOLANT HOSE	1
22	700180	HEATER MOUNTING BRACKET	1
23	700080	SPACER DAMPENING PLATE	1
24	700020	SCREW, M6×16, THREAD FORMING	3
25	705470	LID, BOX, POWDER COATED GREY ENCLOSURE	1

W100-00011 - ESPAR HEATER COMPONENTS

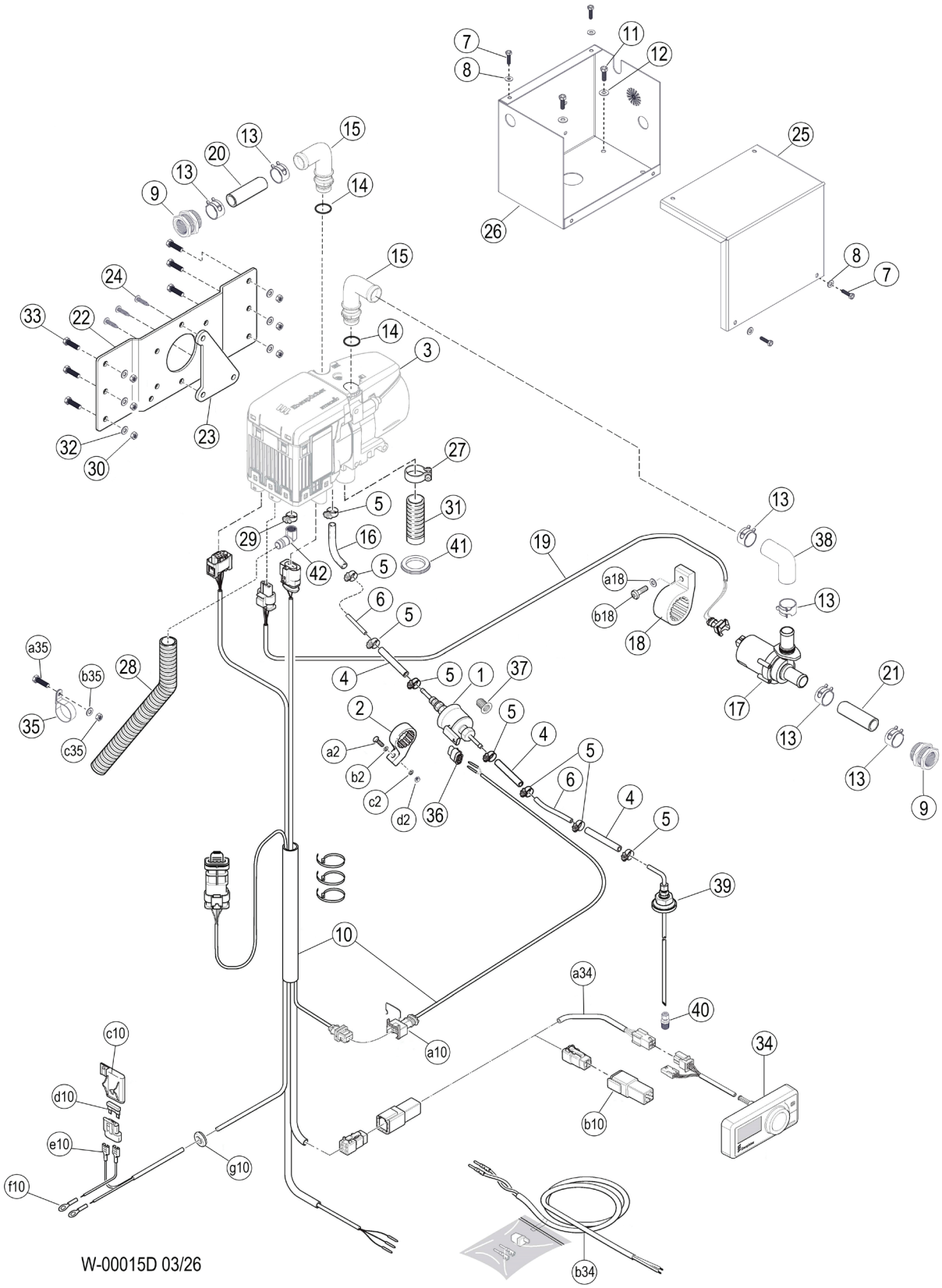

W100-00011 - ESPAR HEATER COMPONENTS

Item	Part #	Description	Qty.
26	705460	BOX, POWDER COATED GREY ENCLOSURE BOX	1
27	700060	EXHAUST CLAMP 26-28MM	1
28	705370	AIR INTAKE TUBE	1
29	700040	HOSE CLIP, 16 – 25 MM	1
30	705450	M6 NUT	6
31	701060	EXHAUST TUBE W/SLEEVE END	1
32	705440	M6 WASHER	6
33	705430	BOLT, M6 X 20	6
34	58369	EASY START PRO TIMER	1
a34	-	a = INCLUDED WITH PRIMARY NUMBER	1
b34	-	b = INCLUDED WITH PRIMARY NUMBER	1
35	700490	CLIP, 28MM	1
a35	-	a = INCLUDED WITH PRIMARY NUMBER	1
b35	-	b = INCLUDED WITH PRIMARY NUMBER	1
36	700500	CONNECTOR METERING PUMP	1
37	56524	STRAINER, FUEL METERING PUMP	1
38	705380	MOLDED ELBOW HOSE	1
39	53394	FUEL DRAWTUBE	1
40	53395	FITTING, COMPRESSION	1
41	705400	SILICONE EXHAUST SEAL	1
42	705410	COMBUSTION AIR ELBOW	1

W200-00020 - HYD TANK FILL PUMP

NOTE: HYDRAULIC FITTINGS GET 545 LOCTITE™

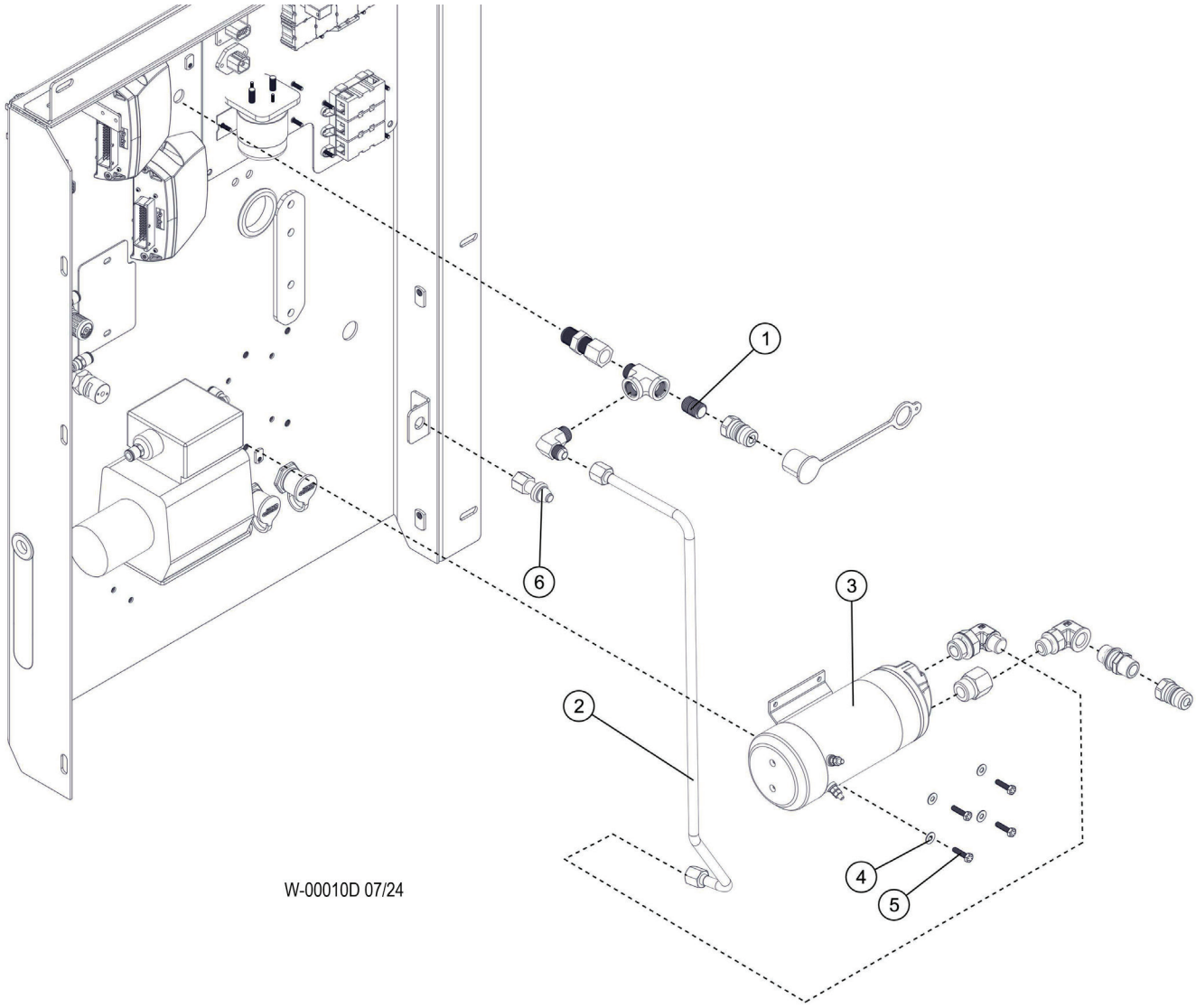

W200-00020 - HYD TANK FILL PUMP

Item	Part #	Description	Qty.
1	16126	NIPPLE, CLOSE - 1/2”	1
2	57664	TUBELINE, FILL PUMP	1
3	55691	FILL PUMP ASSEMBLY	1
4	10757	WASHER, FLAT - .25”	4
5	23264	BOLT - .25” X .5”	4
6	25104	SWITCH, DOOR LIMIT/FILL PUMP	1

W300-00030 - DAFO DISTRIBUTION COMPONENTS

NOTE: HYDRAULIC FITTINGS GET 545 LOCTITE™

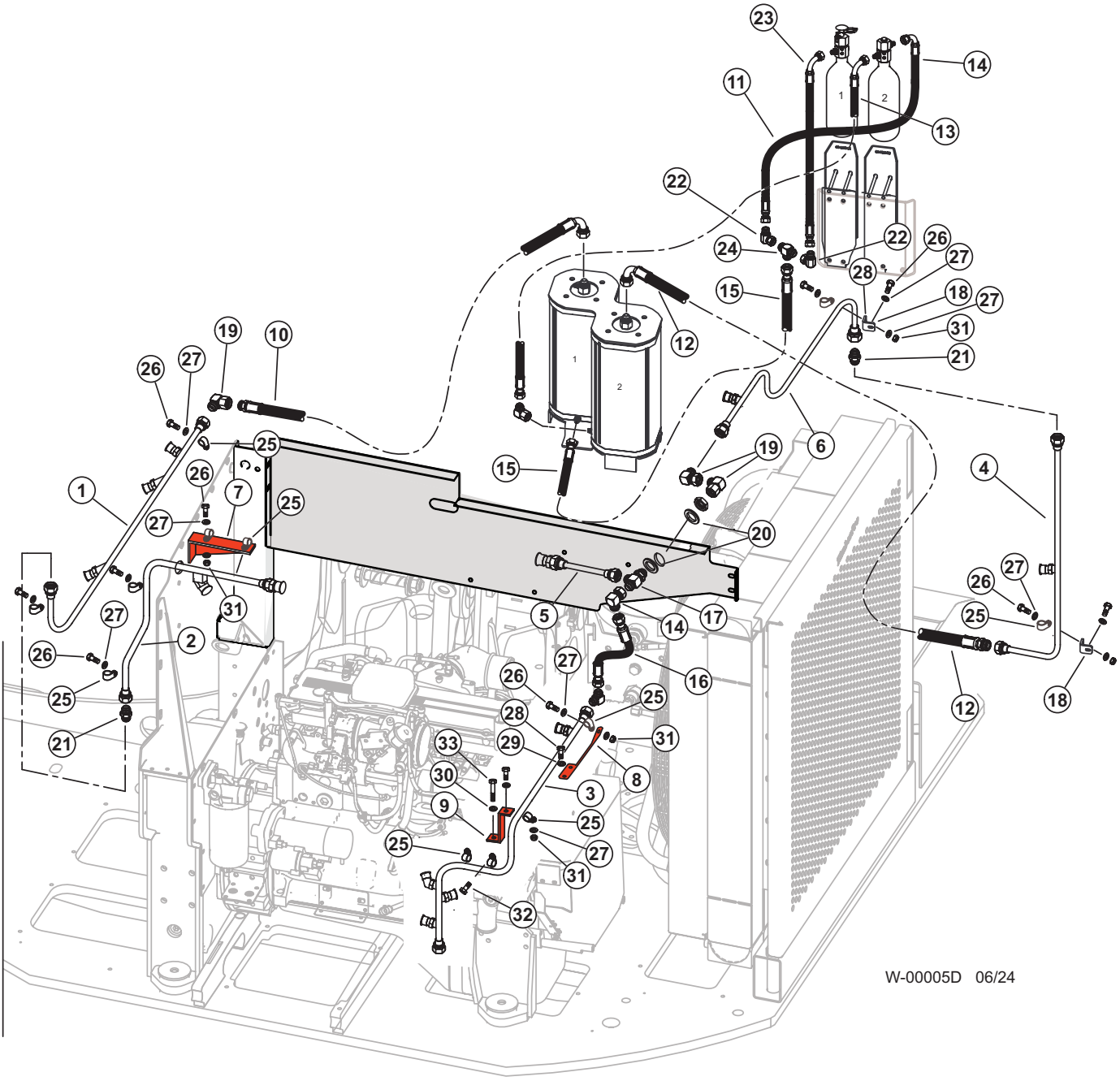

W300-00030 - DAFO DISTRIBUTION COMPONENTS

Item	Part #	Description	Qty.
1	674080	DISTRIBUTION RUN 2, SECTION 1	1
2	674791	DISTRIBUTION RUN 2, SECTION 2	1
3	674070	DISTRIBUTION RUN 1, SECTION 4	1
4	674040	DISTRIBUTION RUN 1, SECTION 1	1
5	674060	DISTRIBUTION RUN 1, SECTION 3	1
6	674050	DISTRIBUTION RUN 1, SECTION 2	1
7	65472	PLATE, FS BRACKET	1
8	61637	PLATE, NOZZLE MT, FRT ENG	1
9	61617	PLATE, FS MT	1
10	674160	AGENT SUPPLY HOSE 1/2” X 117”	1
11	674100	N2 SUPPLY HOSE 1/4”X 16”	1
12	674140	AGENT SUPPLY HOSE 1/2” X 10.5”	1
13	674120	N2 SUPPLY HOSE 1/4” X 36”	1
14	674370	COUPLING, 90° BEND, M-M	1
15	674130	N2 SUPPLY HOSE 1/4” X 49”	1
16	674150	AGENT SUPPLY HOSE 1/2” X 19”	1
17	674400	T-COUPLING, ADJUSTABLE ARM, M-F-M	2
18	46421	BRACKET, COOLER LINE SUPPORT	1
19	674380	COUPLING, 90° BEND, M-F	2
20	10718	7/8” FLAT WASHER	3
21	674360	COUPLING, STRAIGHT, M-M	2
22	674330	ELBOW ADAPTER, ¼”M X ¼”F	2
23	674110	N2 SUPPLY HOSE 1/4” X 13.5”	2
24	674340	T-ADAPTOR, ¼”M X ¼”M X ¼”M	1
25	674470	14MM P CLAMP FOR 1/4 HOSE	1
26	15576	BOLT - .25” X 1”	13
27	10757	WASHER, FLAT - .25”	12
28	80517	BOLT - 10MM-1.5P X 20MM	12
29	15528	WASHER, SAE FLAT - .375” OR 3/8”	1
30	NA	(INCLUDED WITH ENGINE)	1
31	10811	NUT, LOCK - .25”	1
32	NA	(INCLUDED WITH ENGINE)	6
33	NA	(INCLUDED WITH ENGINE)	1
*	674510	11 MM P-CLAMPS, WIDE POST	11
*	679780	6MM P-CLAMPS, WIDE POST	4
*	679790	ADAPTOR STEEL G1/4" (RUF-RUF)	1
*	679810	STRAP DOUBLE, 8MM BLACK	8
*	674500	LABEL KIT FOR SUPPRESSION SYSTEM, ENGLISH	1

***MEANS NOT SHOWN**

W300-00040 - DAFO DISTRIBUTION, DETECTION / ACTUATION CABLE INSTALLATION

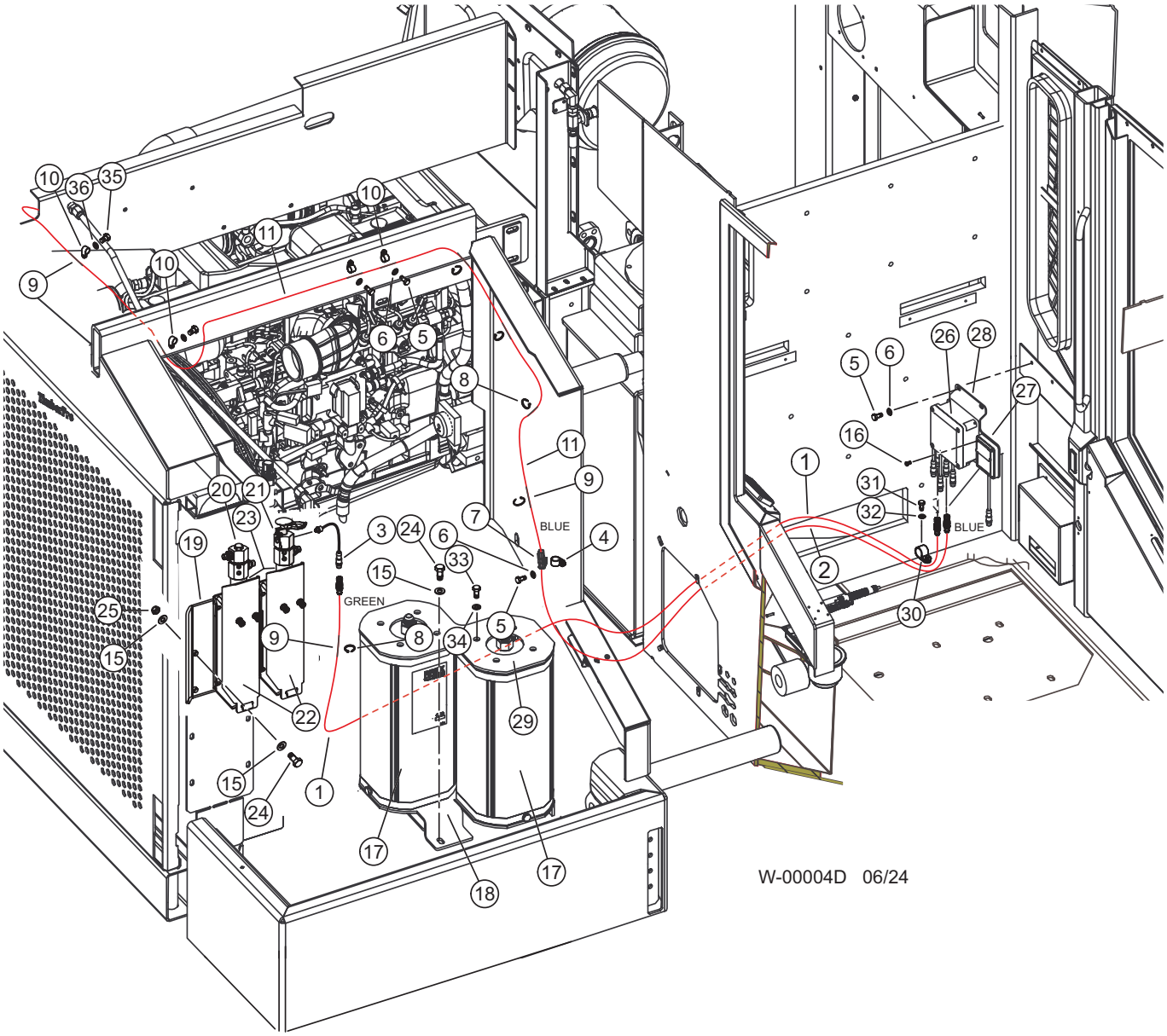

W300-00040 - DAFO DISTRIBUTION, DETECTION / ACTUATION CABLE INSTALLATION

Item	Part #	Description	Qty.
1	674020	CABLE, ACTUATION CIRCUIT, (GREEN)	1
2	674010	CABLE, M12, DETECTOR, (BLUE)	1
3	674170	GAS GENERATOR W. 200 MM CABLE & 3-POLE CONNECTOR	1
4	674480	18MM P CLAMP USED TO ATTACH DEUTSCH AND EOL	1
5	15604	BOLT - .25” X .75”	7
6	10757	WASHER, SAE FLAT - .25”	7
7	NSS	DEUTSCH CONNECTOR	1
8	Double Tie-wrap	SECURING LTD TO DISTRIBUTION TUBING	25
9	674430	RUBBER PROTECTORS FOR LTD CABLE	25
10	674460	8MM P CLAMP FOR LTD	4
11	674290	LINEAR DETECTION WIRE 180°C W/ 1.8 K OHM EOL RESISTOR	1
12	10811	NUT, LOCK - .25”	2
13	(CALL)	SECURING LTD ON BACK OF MACHINE	2
14	10731	BOLT - .375” X 1.5”	2
15	10802	WASHER, FLAT - .375”	6
16	59126	SCREW, 8-32 x 1 PAN HEAD	4
17	650520	FORREX CONTAINER SV-K 10 9,7 LITRE, EVO	2
18	65046	PLATE, DAFO 10L BASE	1
*	61622	PLATE, FS MT	1
19	65053	PLATE, DAFO NITRO BOTTLE MT	1
20	674200	PNEUMATIC/ELECTRIC RELEASE DEVICE	1
21	65051	PNEUMATIC/MECHANICAL/ELECTRIC RELEASE DEVICE	1
22	65049	NITROGEN CARTRIDGE BRACKETS	2
23	674320	NITROGEN CARTRIDGE N10B	2
24	11707	BOLT - .375” X 1”	4
25	10813	NUT, LOCK - .375”	2
26	674280	CONTROL UNIT, CV-X, GEN II	1
27	65054	ALARM PANEL CV-X	1
28	674310	BATTERY 9V, LITHIUM TYPE CR-V9-DV+	1
*	65056	PLATE, DAFO CONTROL PANEL	1
29	65047	PLATE, DAFO 10L TOP	1
30	59091	P-CLIP, 1.0 ID, CUSHIONED	3
31	15605	BOLT - .3125” X .75”	3
32	15559	WASHER, SAE FLAT - .3125”	3
33	59124	BOLT, M12-1.75 x 30, HHC, CL8.8	8
34	15534	WASHER, SAE FLAT - .5”	8
35	15542	BOLT - .375” X .75”	1
36	15528	WASHER, SAE FLAT - .375” OR 3/8”	1
*	679800	ALARM PANEL SEALING KIT	1
*	674000	CABLE, POWER/SHUTDOWN, (RED/WHITE)	1
*	674351	RUBBER COATED STEEL WASHER 1/4'', 13,7X2	1
*	674030	CABLE, ALARM CIRCUIT, (YELLOW)	1
*	674260	CONNECTOR CAN-BUS MALE-FMALE WITH 120 OHM RESISTOR	1

***MEANS NOT SHOWN**

W300-00050 - DAFO DISTRIBUTION, DETECTION / ACTUATION CABLE INSTALLATION

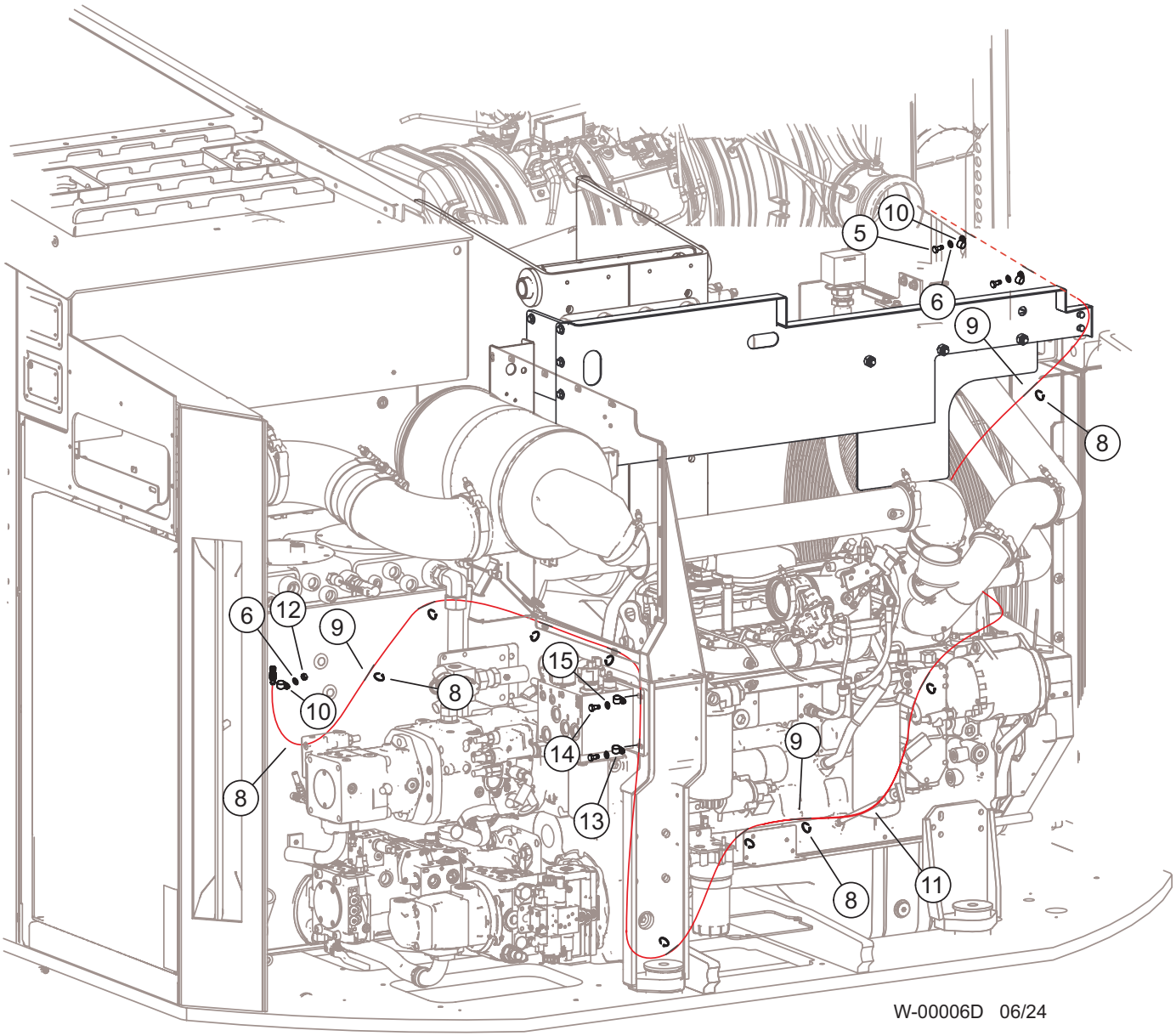

W300-00050 - DAFO DISTRIBUTION, DETECTION / ACTUATION CABLE INSTALLATION

Item	Part #	Description	Qty.
1	674020	CABLE, ACTUATION CIRCUIT, (GREEN)	1
2	674010	CABLE, M12, DETECTOR, (BLUE)	1
3	674170	GAS GENERATOR W. 200 MM CABLE & 3-POLE CONNECTOR	1
4	674480	18MM P CLAMP USED TO ATTACH DEUTSCH AND EOL	1
5	15604	BOLT - .25” X .75”	7
6	10757	WASHER, SAE FLAT - .25”	7
7	NSS	DEUTSCH CONNECTOR	1
8	Double Tie-wrap	SECURING LTD TO DISTRIBUTION TUBING	25
9	674430	RUBBER PROTECTORS FOR LTD CABLE	25
10	674460	8MM P CLAMP FOR LTD	4
11	674290	LINEAR DETECTION WIRE 180°C W/ 1.8 K OHM EOL RESISTOR	1
12	10811	NUT, LOCK - .25”	2
13	(CALL)	SECURING LTD ON BACK OF MACHINE	2
14	10731	BOLT - .375” X 1.5”	2
15	10802	WASHER, FLAT - .375”	6
16	59126	SCREW, 8-32 x 1 PAN HEAD	4
17	65052	SV-K 10L Agent Container, AB-50	2
18	65046	PLATE, DAFO 10L BASE	1
*	61622	PLATE, FS MT	1
19	65053	PLATE, DAFO NITRO BOTTLE MT	1
20	674200	PNEUMATIC/ELECTRIC RELEASE DEVICE	1
21	65051	PNEUMATIC/MECHANICAL/ELECTRIC RELEASE DEVICE	1
22	65049	NITROGEN CARTRIDGE BRACKETS	2
23	674320	NITROGEN CARTRIDGE N10B	2
24	11707	BOLT - .375” X 1”	4
25	10813	NUT, LOCK - .375”	2
26	65048	CONTROL UNIT, CV-01/CK, EXCL BATTERY	1
27	674300	ALARM PANEL CV-01 BK/CK, ENGLISH	1
28	674310	BATTERY 9V, LITHIUM TYPE CR-V9-DV+	1
*	65056	PLATE, DAFO CONTROL PANEL	1
29	65047	PLATE, DAFO 10L TOP	1
30	59091	P-CLIP, 1.0 ID, CUSHIONED	3
31	15605	BOLT - .3125” X .75”	3
32	15559	WASHER, SAE FLAT - .3125”	3
33	59124	BOLT, M12-1.75 x 30, HHC, CL8.8	8
34	15534	WASHER, SAE FLAT - .5”	8
35	15542	BOLT - .375” X .75”	1
36	15528	WASHER, SAE FLAT - .375” OR 3/8”	1

***MEANS NOT SHOWN**

W300-00045 - DAFO DISTRIBUTION, THERMAL BLANKET

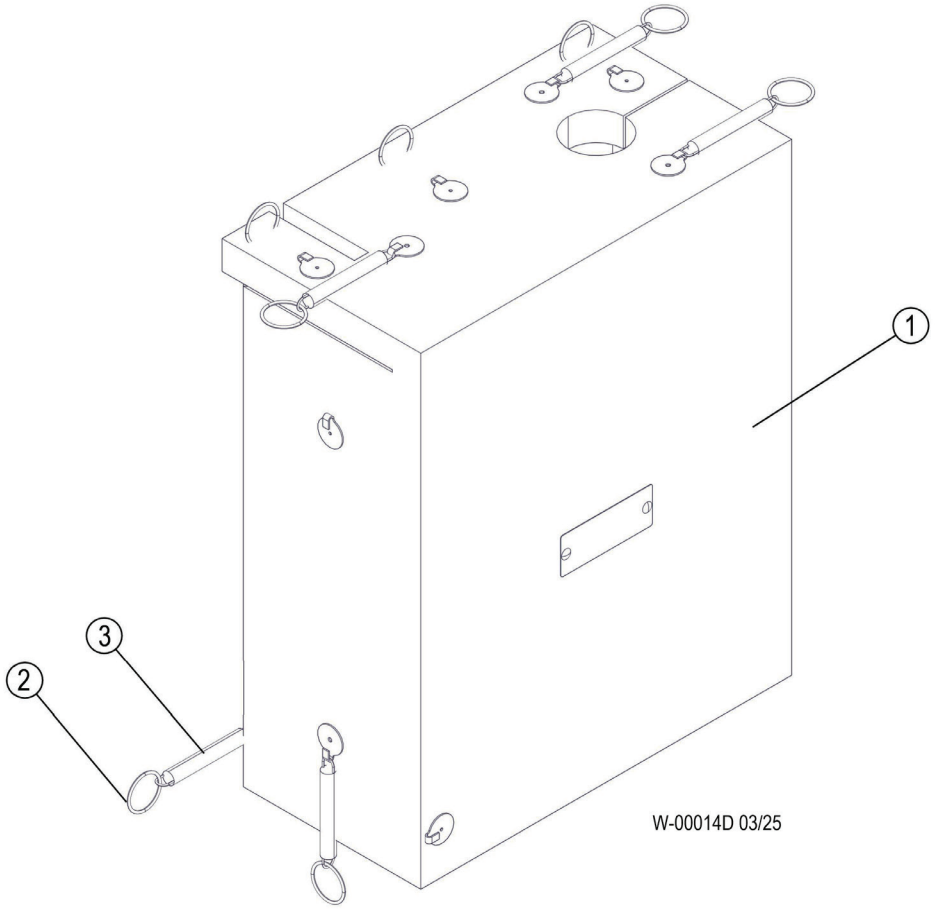

Item	Part #	Description	Qty.
1	644080	INSULATION, DUAL NO2 BOTTLES	1
*	SEE DESCRIPTION	RING (CALL)	11
*	SEE DESCRIPTION	3” SPRING (CALL)	11

W400-00060 - HYD TANK VACUUM PUMP

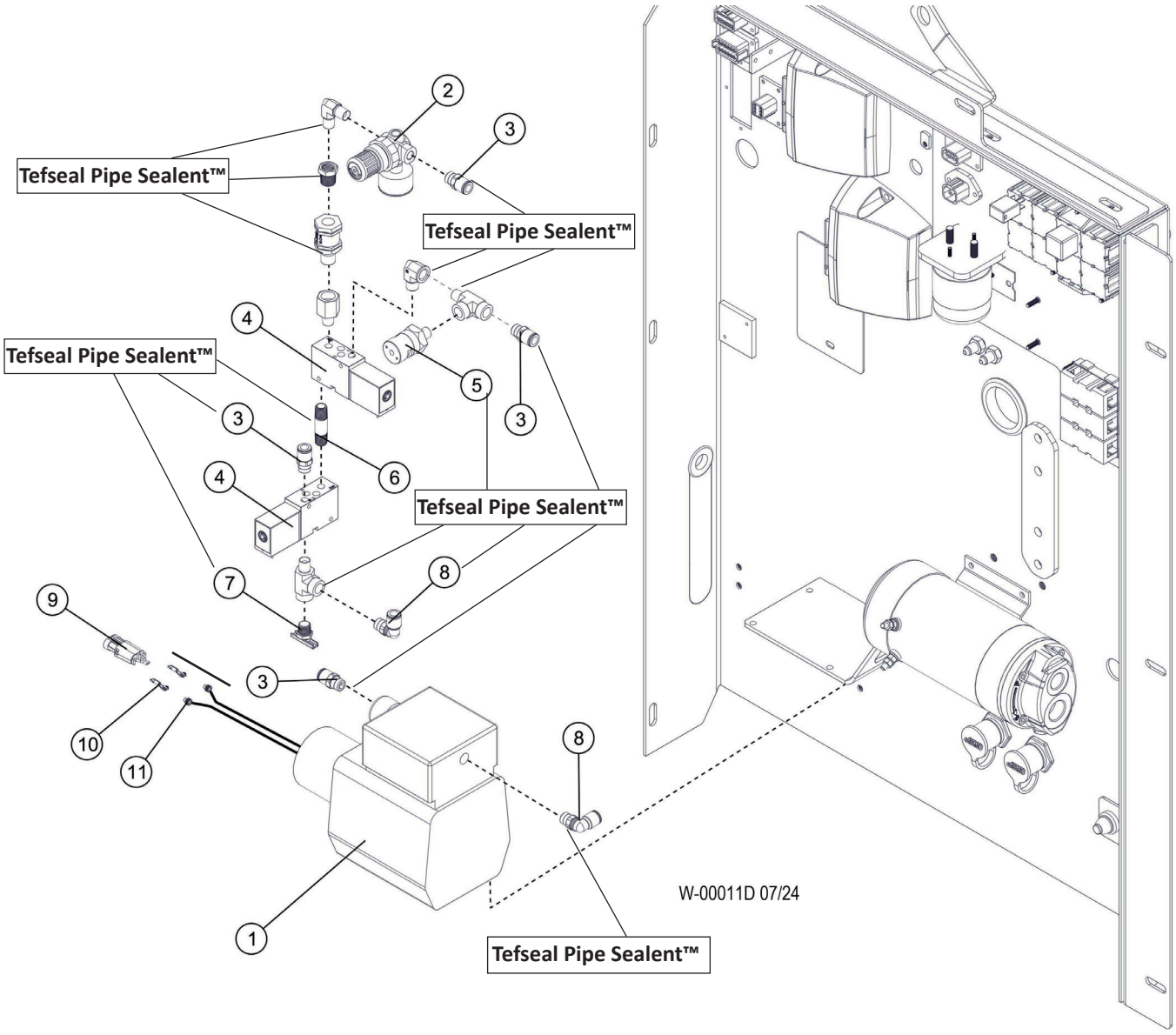

Item	Part #	Description	Qty.
1	51615	VACUUM PUMP	1
2	15649	REGULATOR, TURBO BOOST	1
3	52506	CONNECTOR, STR - PUSH HOSE - 1/4” VACUUM **TEFSEAL PIPE SEALENT™**	4
4	51616	VALVE, 3-WAY VACUUM PUMP	2
5	51737	SWITCH, PRESSURE - VACUUM PUMP **TEFSEAL PIPE SEALENT™**	1
6	16314	NIPPLE, PIPE - .25” X 2” **TEFSEAL PIPE SEALENT™**	1
7	53108	PETCOCK, HYD TANK VENT/RAD DRAIN 1/4 **TEFSEAL PIPE SEALENT™**	1
8	51739	CONNECTOR, ELBOW -PUSH ON (VACUUM) (1/4”) **TEFSEAL PIPE SEALENT™**	2
9	22223	CONNECTOR	1
10	22226	PIN	2
11	22225	SEAL	2

W400-00061 - HYD TANK VACUUM PUMP COMPONENTS

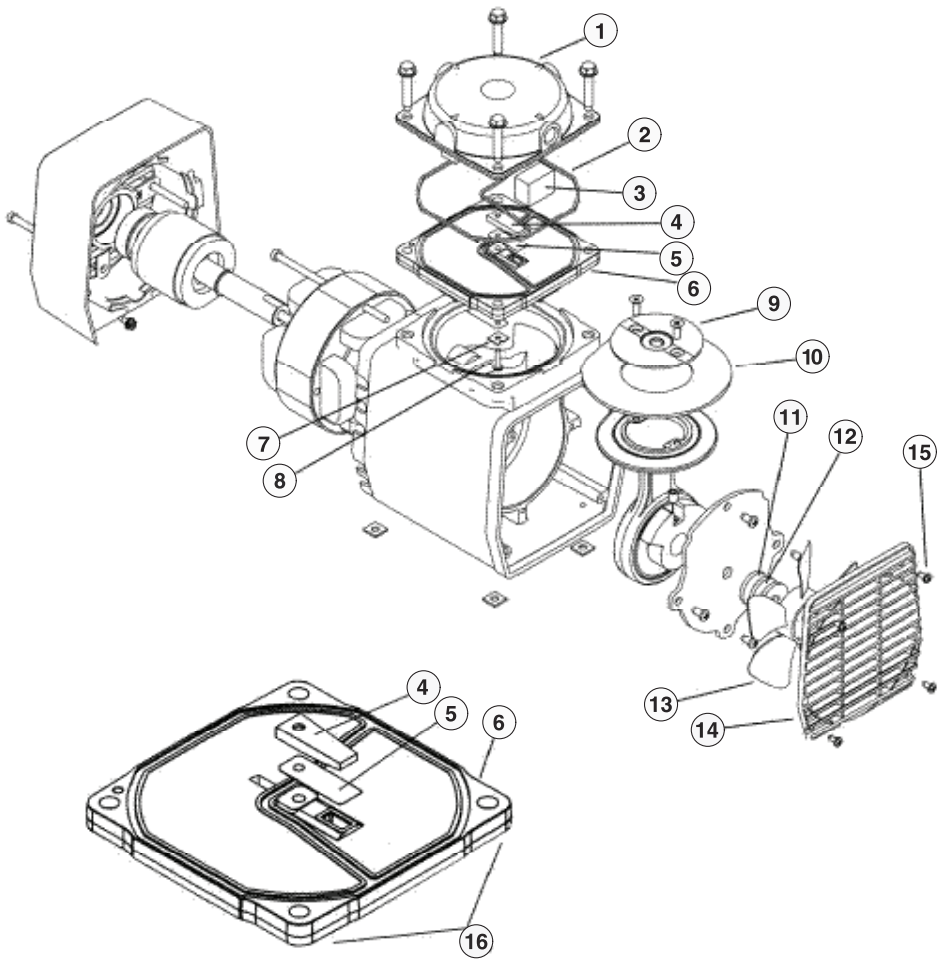

W-00012D 07/24

Item	Part #	Description	Qty.
	51615	VACUUM PUMP	1
1	AP500	HEAD	1
2	AP513	O-RING, HEAD	1
3	AT712A	FILTER, MUFFLER	2
4	AP110	VALVE, LIMITER	1
5	AF817	VALVE, LEAF	2
6	AP504	PLATE, VALVE	1
7	AF819A	RETAINER, VALVE	1
8	BB330A	SCREW, VALVE	1
9	AF809	PLATE, RETAINER	1
10	AF818A	DIAPHRAGM, COMPRESSOR	1
*	AF818B	DIAPHRAGM, VACUUM	1
11	AA929	SPACER, FELT	3
12	AD996	SPACER	1
13	AF533	FAN	1
14	AF807	GRILL	1
15	AP534	RIVET	4
16	AP519	ASSEMBLY, VALVE PLATE	1
*	AP526	CRANKCASE COVER	1
*	AP525	CRANKCASE COVER, SCREW	2
	K294A	SERVICE KIT	1

W500-00000 - FIRE EXTINGUISHER - 2.5 GAL

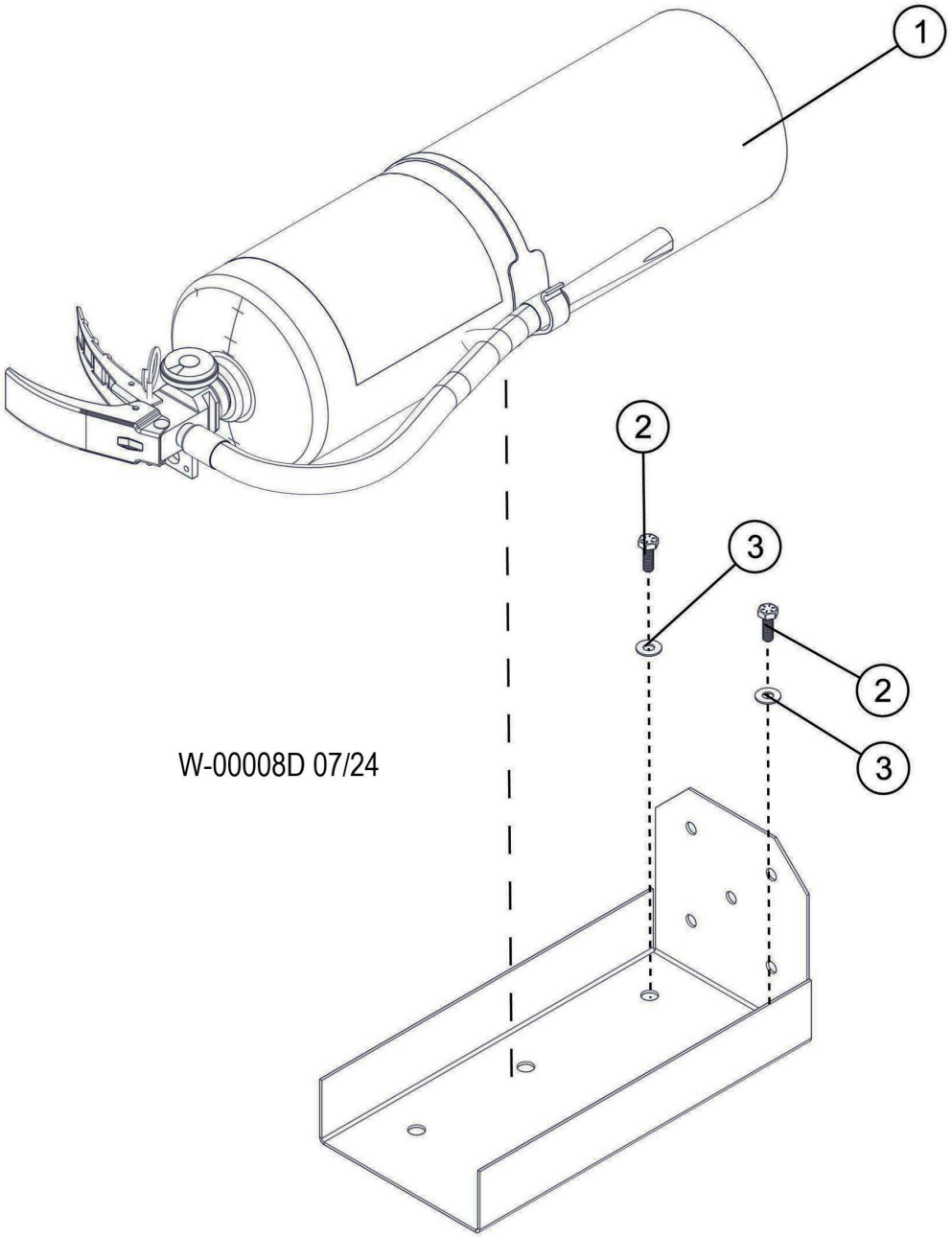

Item	Part #	Description	Qty.
1	51740	FIRE EXTINGUISHER -2.5 GAL(LOADED STREAM)	1
2	15604	BOLT - .25” X .75”	2
3	10800	WASHER, FLAT - .25”	2

W500-00010 - FIRE EXTINGUISHER - 10LB

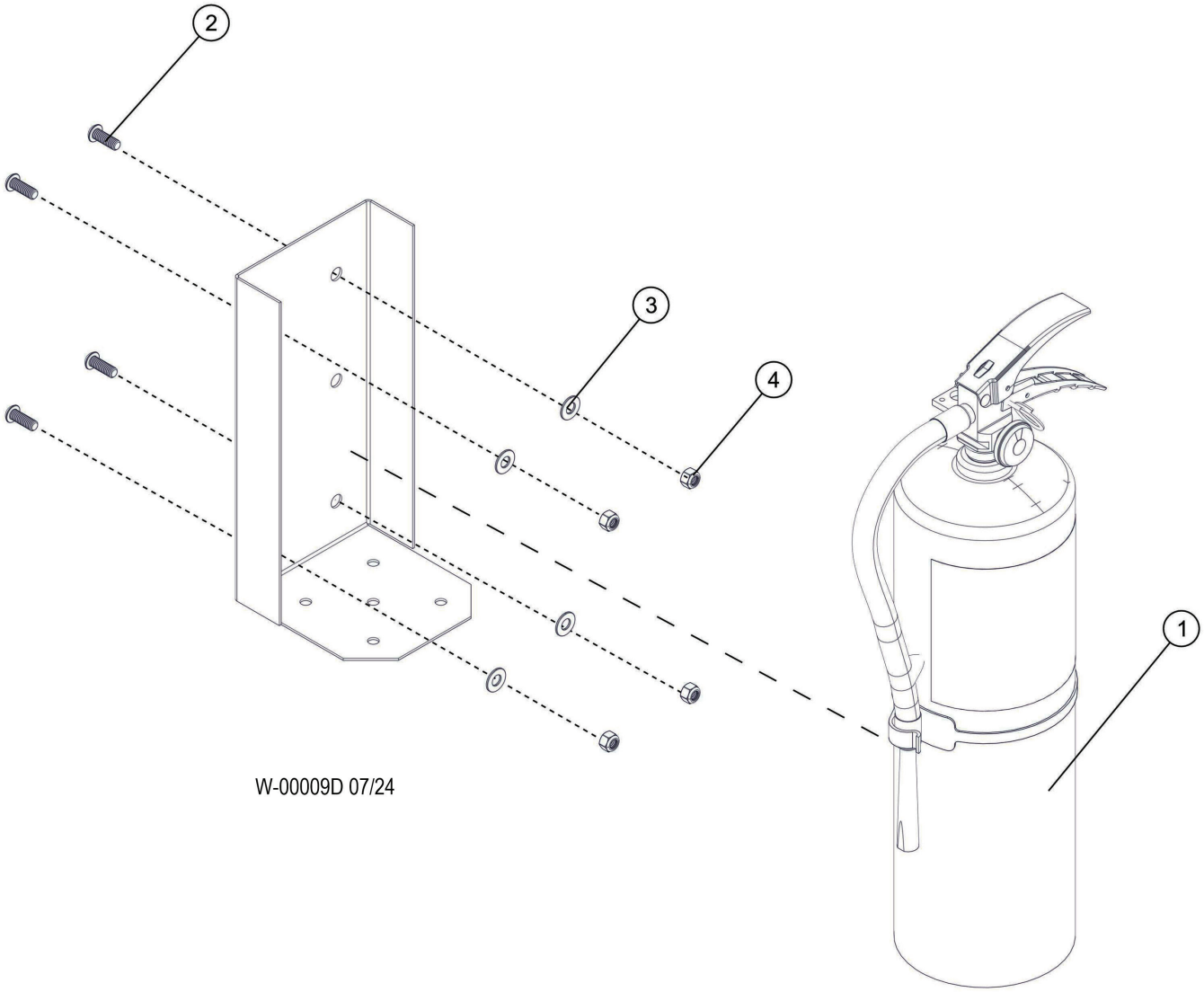

W-00009D 07/24

Item	Part #	Description	Qty.
1	16222	FIRE EXTINGUISHER W/BRACKET - 10 LBS	1
2	59112	SCREW, 5/16-18X7/8” BUTTON HD	4
3	15559	WASHER, SAE FLAT - .3125”	4
4	10812	NUT, LOCK - .3125”	4

W600-00000 - AUTO LEVELING

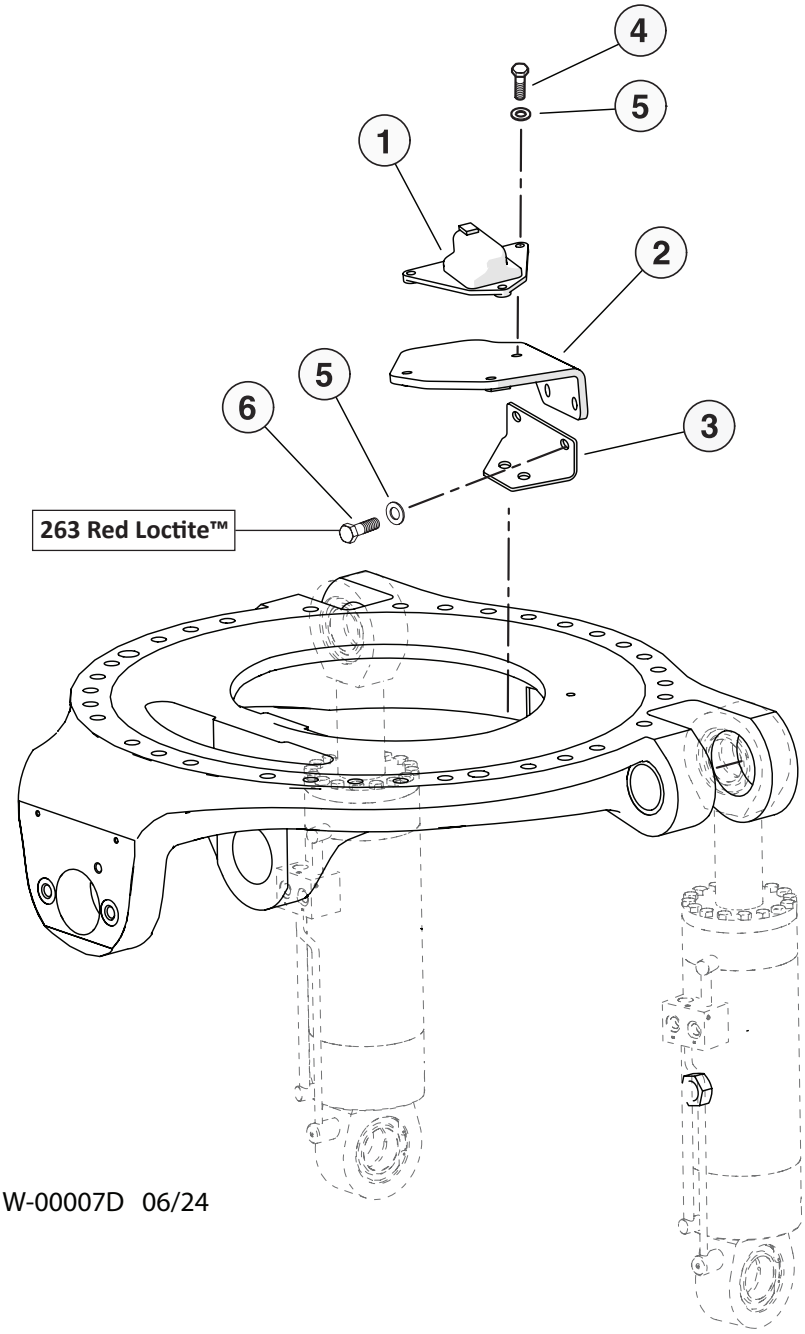

W-00007D 06/24

Item	Part #	Description	Qty.
1	55643	SENSOR, AUTO CAB LEVEL	1
2	47310	BRACKET, SWITCH - AUTO LEVEL	1
3	47308	BRACKET, GREASE LINE - LEVELING	1
4	15604	BOLT - .25” X .75”	3
5	10757	WASHER, SAE FLAT - .25”	5
6	15576	BOLT - .0.25” X 1” **263 RED LOCTITE™**	2

THIS PAGE LEFT BLANK FOR NOTES

THIS PAGE LEFT BLANK FOR NOTES

744