TIMBERPRO

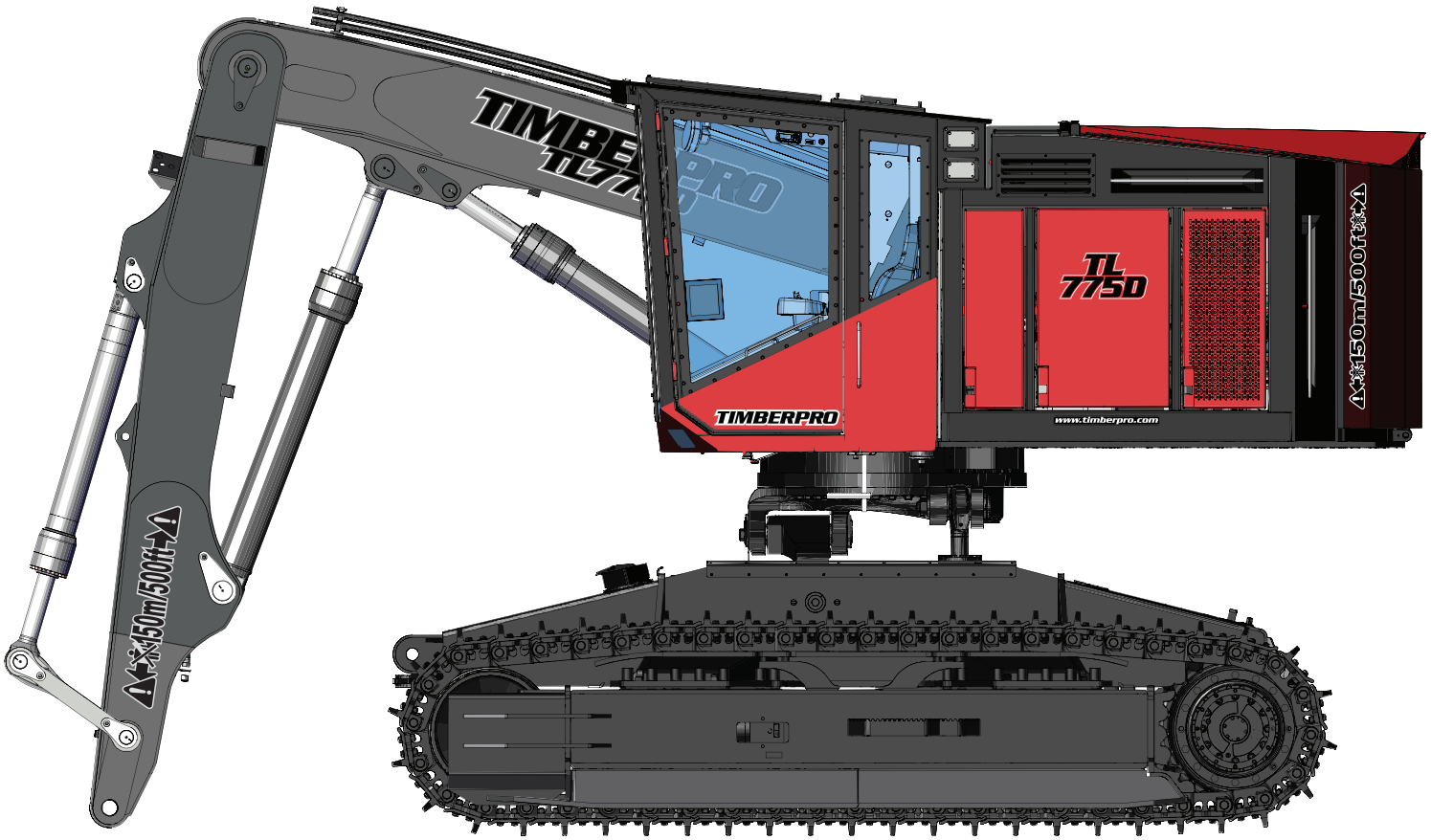

775D

Parts Manual

SN 1035 AND DOWN

Track Leveling Feller Buncher/Harvester/Shovel Logger

TABLE OF CONTENTS
775D SERIES TRACK MACHINE

SECTION	DESCRIPTION	PAGE
UP	Upper Turntable Components	UP-1
EE	Electronic Engines	EE-1
OC	Operator Cab Components	OC-1
ES	Electrical Systems Components	ES-1
DH	Drive Hydraulics	DH-1
FH	Feller Buncher Boom Components	FB-1
FB	Feller Buncher Boom Hydraulics	FH-1
HB	Harvester Boom Components	HB-1
HH	Harvester Hydraulics	HH-1
SBH	Shovel / Felling Boom Hydraulics	SBH-1
SB	Shovel / Felling Boom Components	SB-1
TS	Track System Components Leveling	TS-1
LV	Frame Components	LV-1
OPTIONAL SYSTEMS		
FS	Fire Suppression System	OS-FS-1
OH	Optional Heaters	OS-OH-1
MISC.		
TOC	Explantion of Hose Assemblies	TOC 1-9

UPPER TURNTABLE UP

Section UP-1: Structural Components

Upper Turntable Installation:
Leveling Machines UP-1-1
Upper Turntable Main Structural Components UP-1-3

Swing Motor Installation:
Lohmann / Rexroth UP-1-5

Upper Turntable Guards, Panels & Covers Installation:
Upper Turntable Doors, Covers, and Accessories Installation UP-1-7
Weatherstrip, Foam, and Rubber Install UP-1-9
Gull Wing Door and Rubber Guard Install UP-1-11
Rotary Manifold Breakdown UP-1-13
Gull Wing Lift Cylinder Breakdown UP-1-14
Gull Wing Pump Breakdown UP-1-15

Section UP-2: Hydraulic Tank

Hydraulic Tank Assembly and Filter Installation UP-2-1
Hydraulic Tank Component Assembly UP-2-5
Vacuum Pump Breakdown UP-2-7
DEF Tank Covers and Insulation Assembly and Installation UP-2-9

Section UP-3: Radiator and Oil Cooler Fan Drive Install

Radiator / Oil Cooler Breakdown UP-3-1
Fan Motor Breakdowns UP-3-3

Section UP-4 Decals

Upper Turntable Decals UP-4-1
Cab Decals UP-4-3
Warning Decals UP-4-5
Lower Frame Decals UP-4-7

ELECTRONIC ENGINES EE

Section EE-1: Cummins L9 Stage V and Cummins QSL9 TPEM Engine

Stage V and QSL9 TPEM Engine Installation EE-1-1
Triple Drive Panel and Attributing Parts Installation EE-1-3
Stage V Alternator, Starter, Filters, Senders, and Belt EE-1-5
QSL9 TPEM Engine Belt and Shroud Install EE-1-7
Stage V Fuel Lines Connections EE-1-9
QSL9 TPEM Fuel Lines Connections EE-1-11
Air Cleaner, Intake Tubes, and Attributing Parts Install EE-1-13
Stage V Muffler Assembly and Installation EE-1-15
QSL9 TPEM Muffler Assembly and Installation EE-1-17
Triple Pump Drive Transmission Breakdown EE-1-19
Engine Air-to-Air Connection and Installation EE-1-21
Stage V DEF Tank Assembly and Installation EE-1-23

Charge Manifold Assembly and Installation EE-1-25

OPERATOR'S CAB OC

Section OC-1: Cab Weldment & Installation

Cab Weldment Assembly OC-1-1
Cab Weldment Installation OC-1-3
Door Assembly & Installation OC-1-5
Door Covers, Weatherstrip, and Handle Installation OC-1-7
Cab Step Installation OC-1-9

Section OC-2: Window Installation

Window and Lights Cover Base Plate Installation OC-2-1

Section OC-3: Interior Components

Interior Trim & Floormat OC-3-1
Operator's Seat Install (BeGe) OC-3-5
Operator's Seat Install (Seats Inc) OC-3-6
Foot Pedals Install OC-3-7
Operator's Seat Breakdown (BeGe) OC-3-9
Operator's Seat Breakdown (Seats Inc) OC-3-11

Section OC-4: Air Conditioner / Heater Unit

Air Conditioner / Heater Unit Breakdown OC-4-1
Air Conditioner / Heater Unit Installation OC-4-2
Air Conditioner / Heater Unit Duct Installation OC-4-3
Air Conditioner Lines OC-4-5
Heater Lines OC-4-7

ELECTRICAL SYSTEM ES

Section ES-1: Engine Electrical

Battery Installation ES-1-1
Cummins Stage V After Treatment Electrical Harness ES-1-2
Battery Cable, Starter Cable, Electrical Panel, Cab Load Center Power Installation ES-1-3
Hydrostatic Harness, Cab to XA2 Panel Harness, Control Valve Harness ES-1-5
Gearbox Oil Cooler Harness, Engine Tier 3 Cummins 775, Rotary Manifold, Tier 4 Harness ES-1-6
Motor Shift, Parking Brake Harness, Charge Fan Harness, Hydraulic Tank Harness ES-1-8
Cummins Stage V Electrical Harness ES-1-9
Cab to Engine Harness, ... ES-1-11
DEF Tank, Stage V Engine Wire Harness ES-1-12

Section ES-2: Operator's Cab

Main Electrical Center Installation ES-2-1
Main Electrical Center Assembly ES-2-2
Upper Dash Installation ES-2-3
Upper Dash Wire Harness ES-2-4
Heat A/C Control Wire Harness ES-2-5
Cab Lights Wire Harness . . . . . ES-2-7 - 2-10

Cab Lights Assembly and Installation 2-11
MD4 Harness, Lights Front Door Harness, Foot Pedals Harness, Foot Pedals Harness, Joystick Pod 2-13

Section ES-3: IQAN Control System

Joystick Control Pods - Breakdown ES-3-1
Hand Controls Breakdown ES-3-3

TRACK DRIVE HYDRAULICS DH

Section DH-1: Track Drive Pump Circuit

Track Drive Pump Install, Pressure, Suction, and Drain DH-1-1
Parking Brake and Motor Shift System Assembly and Installation DH-1-3

Section DH-2: Track Drive Components

Track Drive Pump Breakdown (Forward Cast Housing Components) DH-2-1
Track Drive Pump Breakdown (Stroke Control Assembly) DH-2-3
Track Drive Pump Breakdown (Thru Drive Assembly) DH-3-5

FELLER BUNCHER HYDRAULICS FH

Section FH-1: Supply, Tank, Load Sense, and Drains

Main Control Valve, Implement Pump Installation, Suction Hose, Implement Pump Supply, and Drain Line FH-1-1
Swing Brake Hydraulics, Radiator Supply and Drain, and Swing Brake Assembly FH-1-3
Swing Motor Hydraulics, Swing Motor Install FH-1-5
Charge Pressure, Drainage, and Hydraulic Tank Connections FH-1-7
Cab Leveling Lines FH-1-9
Supply, Return, and Flushing Circuits FH-1-11
Vacuum Pump Hydraulic Supply and Assembly FH-1-13

Section FH-2: Feller Buncher Boom Hydraulics with Disc Saw Application

Main Boom Hydraulics Assembly and Installation FH-2-1
Disc Saw Hydraulics at Main and Stick Boom FH-2-3
Stick Boom Cylinder and Tool Cylinder Function FH-2-5
Case Drain and Rotate Function FH-2-7

FELLER BUNCHER BOOMS FB

Section FB-1: Main Boom

Main Boom Installation, Cylinder, Debris Shield, Pins, Bushings, and Guard Installation FB-1-1
Stick Boom Installation, Cylinder, Tool Cylinder, Pin, Bushing, and Linkage Installation FB-1-3
Main Boom and Stick Boom Grease Line Installation FB-1-5

Section FB-2: Cylinders

Main Boom Cylinder (6” Dia. Hydradyne) FB-2-1
Stick Boom Cyliner (6.5” Dia. Hydradyne) FB-2-3
Tool Tilt Cylinder (Hydradyne) FB-2-5

HARVESTER HYDRAULICS HH

Section HH-1: Hydraulics Assembly and Installation

Implement Pump Hydraulics Parts and Assembly HH-1-2
Hydraulics Parts and Assembly HH-1-4
Swing Motor Hydraulics and Assembly. HH-1-6
Charge Manifold Pressure, Drainage and Tank Connections HH-1-8
Cab Leveling Hydraulics Parts and Assembly HH-1-10
Supply, Return, and Flushing Circuits HH-1-12/14
Implement Pump - 175CC HH-1-15
Auxiliary Pump 60CC HH-1-16

Section HH-2: Harvester Boom Hydraulics

Main Boom Cylinder Parts and Assembly. HH-2-2
Hydraulics Lines - Valve to Boom HH-2-4
Return and Case Drain Hydraulic Lines. HH-2-6
Main Boom to Stick Boom Hydraulic Lines. HH-2-8

HARVESTER BOOM ASSEMBLY AND INSTALLATION HB

Section HH-1: Boom Components

Main Boom Assembly and Installation. HB-1-2
Stick Boom Assembly andInstallation. HB-1-4
Main Boom and Stick Boom Grease Lines HB-1-6

Section HH-2: Hydraulic Cylinders

Valve to Boom Hydraulic Lines SBH-2-2
Main Boom to Stick Boom Hydraulic Lines. SBH-2-4
Main Boom Cylinder Hydraulics Parts and Assembly . . . . .

SHOVEL LOGGER / FELLING HYDRAULICS SBH

Section SBH-1: Hydraulic Assemblies

Implement Pump Hydraulics and Assembly SBH-1-2
Hydraulics Parts and Assembly SBH-1-4
Swing Motor Hydraulics. SBH-1-6
Charge Manifold Pressure, Drainage and Tank Connections SBH-1-8
Cab Leveling Hydraulics and Assembly. SBH-1-10
Supply, Return and Flushing Circuits SBH-1-12/14
Implement Pump - 175CC SBH-1-15
Auxiliary Disk Saw Pump - 60CC SBH-1-16

Section SBH-2: Boom Hydraulics

Valve to Boom Hydraulic Lines SBH-2-2
Main Boom to Stick Boom Hydraulic Lines. SBH-2-4
Main Boom Cylinder Hydraulics Parts and Assembly SBH-2-6

SHOVEL LOGGER / FELLING BOOM ASSEMBLY AND INSTALLATION SB

Section SB-1: Boom Components

Main Boom Assembly and Installation SB-1-2
Shovel Logger Stick Boom Assembly and Installation SB-1-4
Shovel Felling Stick Boom Assembly and Installation SB-1-6
Main Boom and Stick Boom Grease Lines SB-1-8

Section SB-2: Hydraulic Cylinders

Main Boom Cylinder. SB-2-2
Stick Boom Cylinder. SB-2-4
Heel Cylinder. SB-2-6

LEVELING FRAME COMPONENTS LV

Section LV-1: Leveling Frame Structural

Frame and Access Covers and Installation LV-1-2
Rear Frame Component Installation LV-1-4

Section LV-2: Leveling Frame Components

Lower Turntable, Yoke, and Cylinder Installation. LV-2-1
Debris Shield, Skirting, and Belting Installation LV-2-3

Section LV-3: Leveling Frame Hydraulics

Track Motor Leveling Hydraulics LV-3-1
Leveling Cylnder Breakdown LV-3-5
Leveling System Grease Lines LV-3-7

Section LV-4: Fuel Tank Components

Leveling Fuel System. LV-4-1

TRACK SYSTEM COMPONENTS TS

Section TS-1: 725C Undercarriage

Track Frame Bottom Roller Installation TS-1-1
Upper Roller/Slide Installation TS-1-3
Front Idler and Idler Adjustment Cylinder Installation TS-1-5
Chain and Track Pads TS-1-7
Final Drive Installation TS-1-9
Final Drive Breakdown TS-1-11
Drive Motor Assembly and Installation TS-1-13

OPTIONAL SYSTEMS OS

Section OS-FS-1: Optional Fire Suppression System

Chemical Agent System Assembly and Installation OS-FS-1-1
Emission System Assembly and Installation OS-FS-1-4

Section OS-OH-1: Espar Heater Install

Espar Heater Install OS-OH-1-1
Espar Heater Hoses (Cummins QSC) OS-OH-1-3

Section OS-OH-2: Espar Heater Breakdown

Espar Heater Breakdown (Heater) OS-OH-2-1

Hydraulic Hose Code

Common Hose Description: 2018.5-08-080S-0804-WS

2 018.5 - 08 - 08 0S - 08 04 - WS

# of Wires (Pressure Rating)	Overall Length	Special	Hose Diameter	Coupling 1 Size	Style 1	Coupling 2 Size	Style 2	Protective Wrap
2 4 5 6	XXX (inches)	CS FR FS	02 = 1/8” 04 = 1/4” 06 = 3/8” 08 = 1/2” 10 = 5/8” 12 = 3/4” 16 = 1” 20 = 1 1/4” 24 = 1 /12” 32 = 2” 48 = 2 1/2”	02 04 06 08 10 12 16 20 24 32 48		02 04 06 08 10 12 16 20 24 32 48		WS = Wear Sleeve SW = Sprial Wrap AG = Flat Armor Guard SG = Metal Spring Guard AC = Against Curve

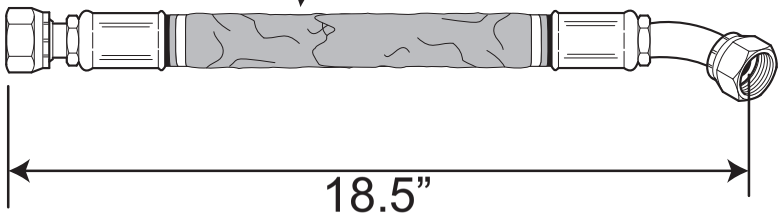

Fitting Styles	
MJ = Male Jic Str.	MP = Male Pipe
JS Female Jic Str.	FP = Female Pipe
J4 = Female Jic 45	PS = Male Pipe Swivel
J9 = Female Jic 90	PA = Code 61 Flange
OM = Male O-Ring Face	PA4 = Code 61 Flange 45
OS = Female O-Ring Face	PA9 = Code 61 Flange 90
O4 = Female O-Ring Face 45	PH = Code 62 Flange
O9 = Female O-Ring Face 90	PH4 = Code 62 Flange 45
	PH9 = Code 62 Flange 90

PAGE INTENTIONALLY LEFT BLANK

SECTION UP-1
UPPER TURNTABLE STRUCTURAL COMP'S, DOORS, AND COVERS

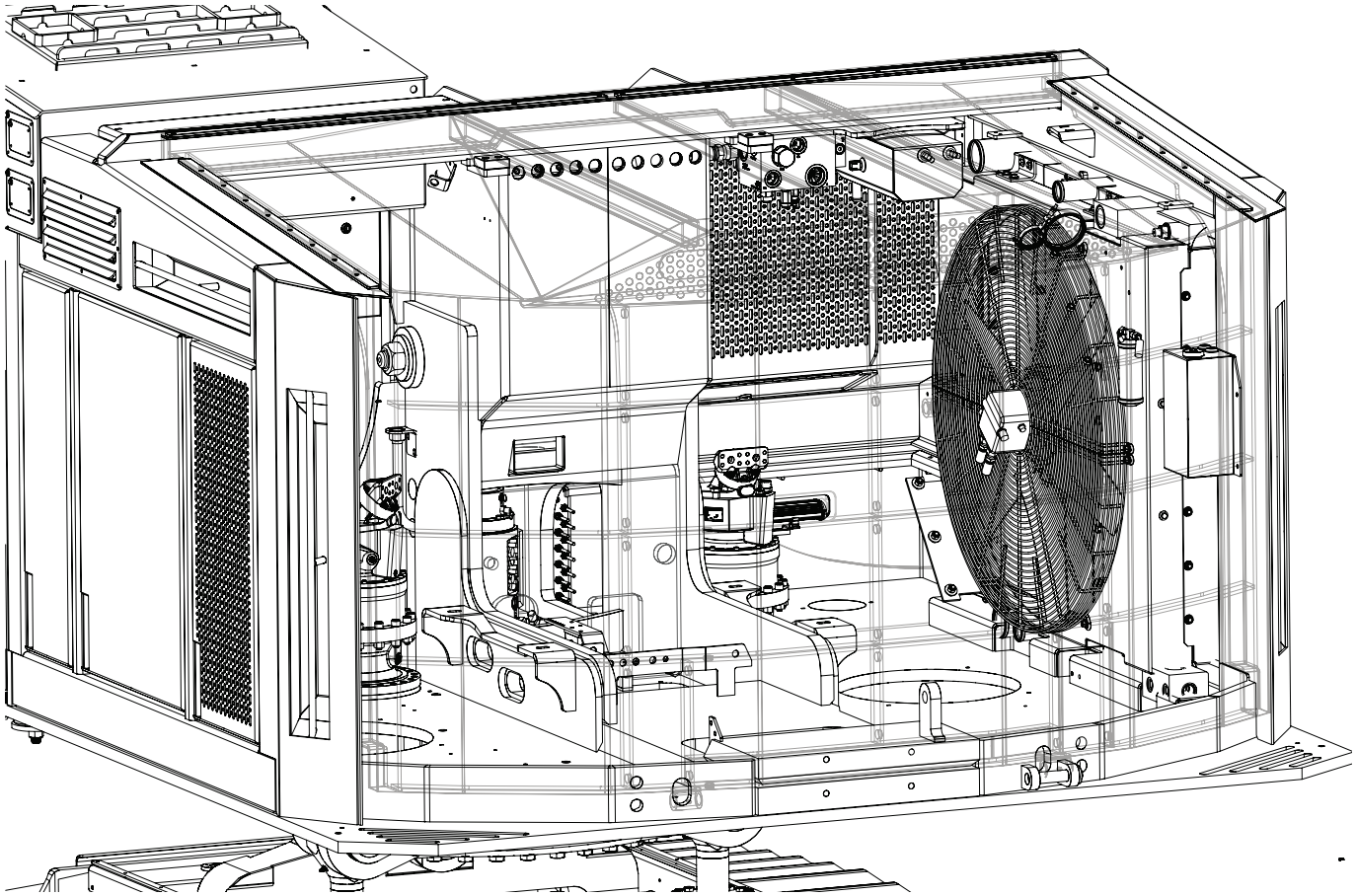

UPPER TURNTABLE - NON-LEVELING
TL-775 LEVELING TURNTABLE, SWING BEARING, AND ROTARY MANIFOLD

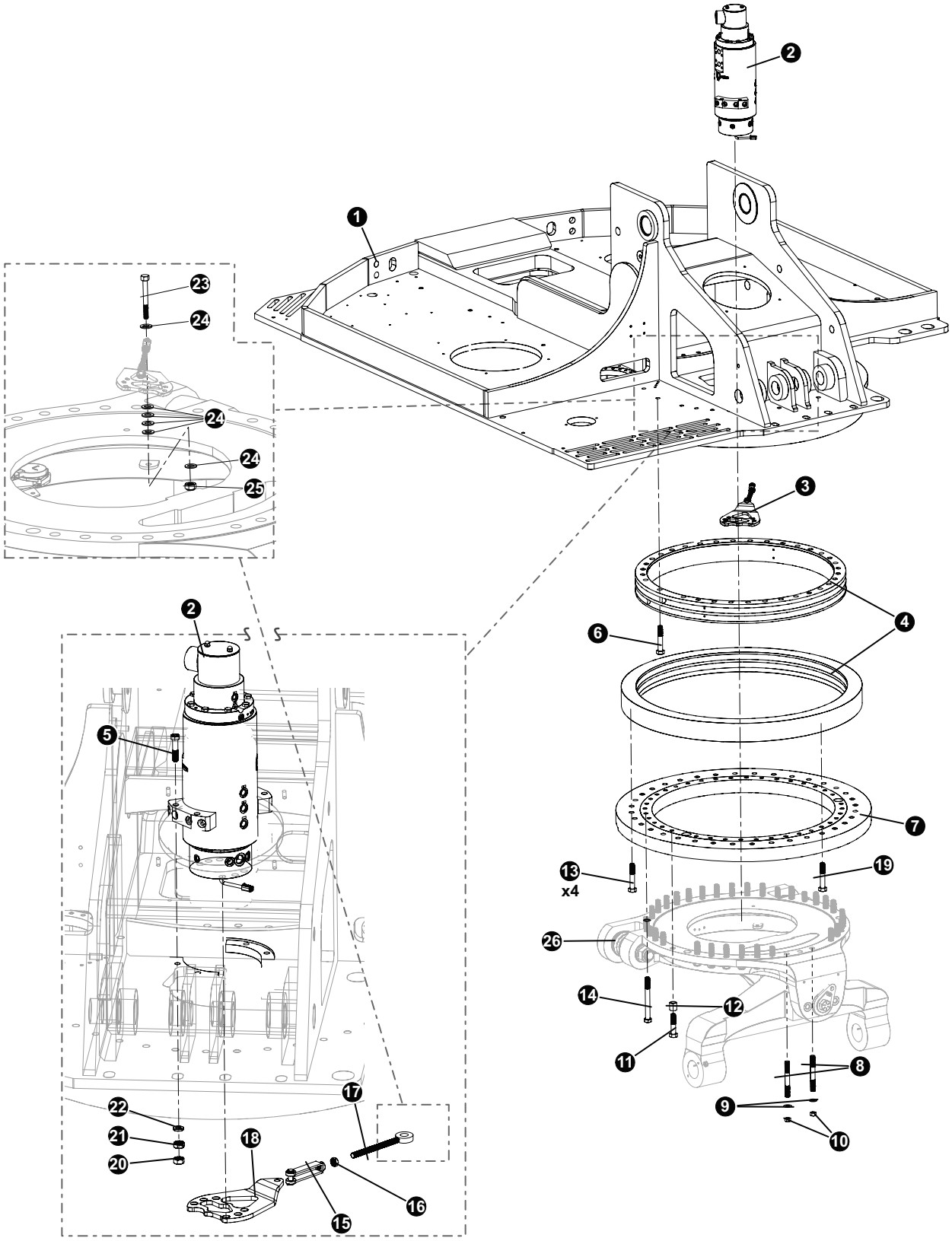

UPPER TURNTABLE - NON-LEVELING
TL-775 LEVELING TURNTABLE, SWING BEARING, AND ROTARY MANIFOLD

REF	PART #	QTY	DESCRIPTION	SEE SECTION
1	48840	1	WELDMENT, TAILSWING D - UPPER BASE	
2	(Click Here)	1	MANIFOLD, ROTARY - 14 PORT	UP-1
3	NA		(See Exploded View at bottom of illustration for parts)	
4	55589	1	BEARING, SWING - DOUBLE BALL (TL765, 755)	
5	10838	4	BOLT - .625” X 5”	
6	51816	34	1-8x4 1/2” Allen Sockethead Bolt (LAWSON #)	
7	47030	1	PLATE, BRG SUPPORT RING - TL765D	
8	53586	2	STUD - 1”- 8 X 7” TRACK MACHINE	
9	18532	24	WASHER	
10	17515	4	NUT, HEX - .625” (A109 LAWSON P#)	
11	50263	22	BOLT - 1” X 5.5”	
12	12463	22	SPACER, BOLT - LOWER TURNTABLE 1.88L	
13	58196	4	BOLT, 1-8X3 ALLOY SOCKET HEAT (LAWON #)	
14	18529	13	BOLT - 1” X 8.5”	
15	57502	2	YOKE, ROTARY MANIFOLD - 765	
16	17515	2	NUT (LAWSON #)	
17	57503	1	ROD, TIE - ROTARY MANIFOLD - 765	
18	60509	1	BRACKET, SWIVEL LOCK ARM T/M	
19	15577	36	BOLT (LAWSON #)	
20	10816	4	NUT, LOCK - .625”	
21	82881	4	NUT, HEX - .625” (LAWSON #)	
22	23210	4	WASHER, SAE FLAT - .625” (EXTRA THICK)	
23	10773	1	BOLT - .625” X 3.5”	
24	10771	6	WASHER, SAE FLAT - .625”	
25	10816	1	NUT, LOCK - .625”	
26	(Click Here)	1	ASSEMBLED CASTING	LV-2

📖 See reference page for component or assembly breakdown.
❑ Kit or Assembly - includes all items indented underneath.

Note: 1
Use Loctite 272 (blue) during installation.

Note: 2
Use Loctite 272 (red - high strength) during installation.

UPPER TURNTABLE - NV & LV
TL/TN 775 TURNTABLE, SWING BEARING, AND ROTARY MANIFOLD

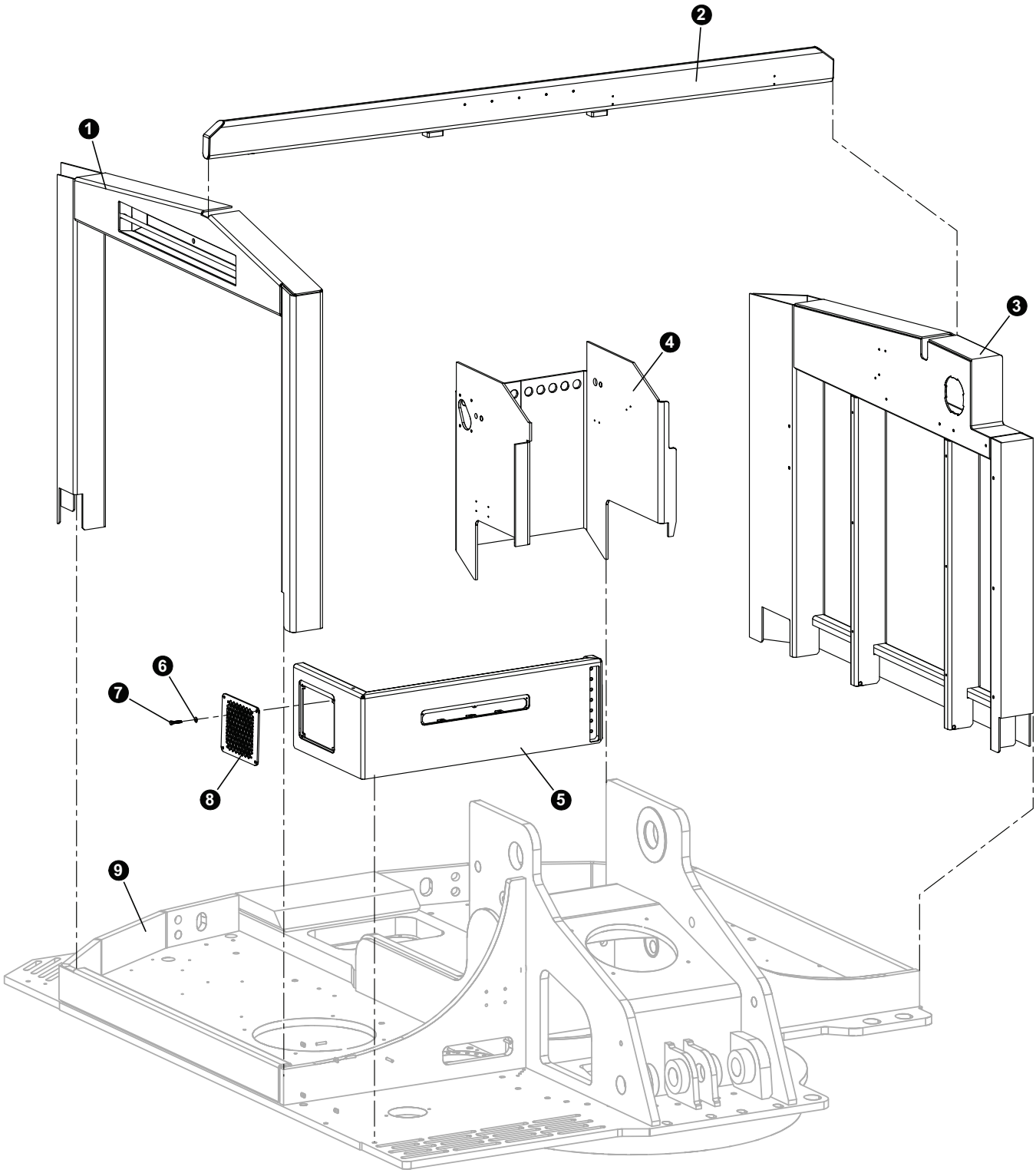

UPPER TURNTABLE - NV & LV
TL/TN 775 TURNTABLE, SWING BEARING, AND ROTARY MANIFOLD

REF	PART #	QTY	DESCRIPTION	SEE SECTION
1	48855	1	WELDMENT, D COOLER SURROUND - TAIL SWING	
2	48888	1	WELDMENT, TAILSWING SURROOUND SUPPORT	
3	48877	1	WELDMENT, CAB - SIDE SURROUND - TAIL SWING	
4	48463/48464	1	PLATE, CHIMNEY - TAIL SWING	
5	48864	1	WELDMENT, FRONT PLATE - TAIL SWING	
6	48912	1	PLATE, G-BOX COOLER MTG	
7	11707	4	BOLT - .375” X 1”	
8	10802	4	WASHER, FLAT - .375”	
9	(Click Here)	1	WELDMENT, D UPPER TURNTABLE	UP-1

UPPER TURNTABLE - NV & LV
TL-775 SWING MOTOR INSTALLATION

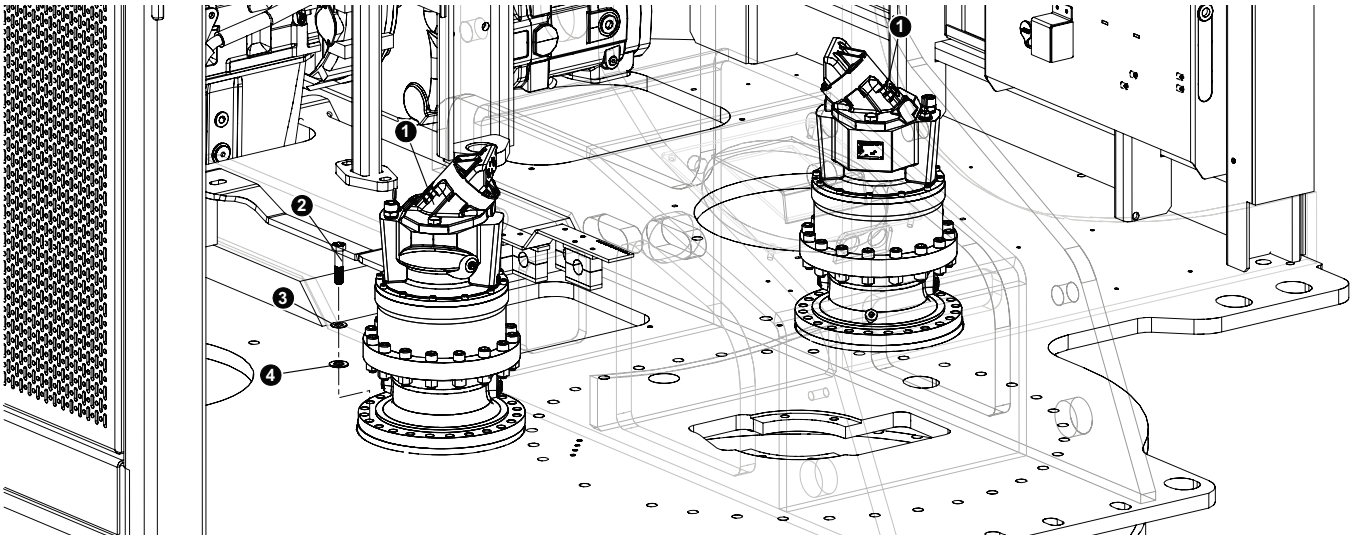

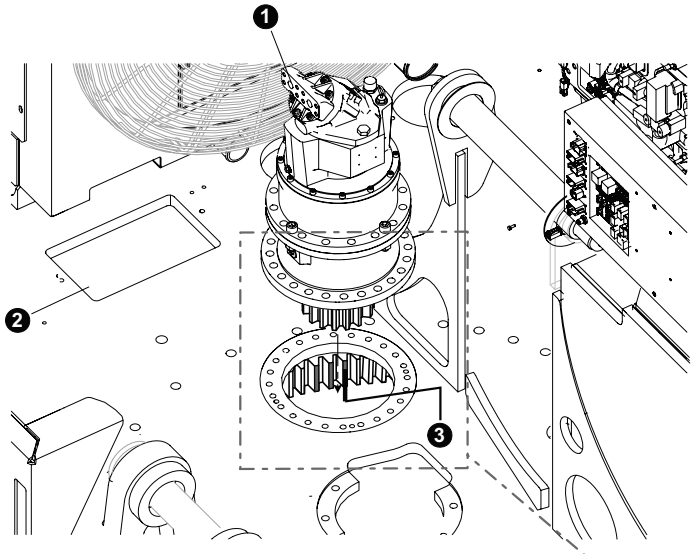

Installing the Eccentric Swing Motor:

Important:

1. Locate the green paint on the swing bearing teeth (3) by rotating the swing bearing until the green teeth are centered below the upper turntable (2).
2. Using a lifting device, lower the Eccentric swing motor (1) onto the upper turntable (2).
   a. Note: It may be necessary to lift the swing motor back out of position and rotate the motor until the motor fits snug with the upper turntable.
2. Once the swing motor is in place, using a pry bar (4), turn the motor clockwise until tight.
3. Additional adjustments may be required. Use the closest set of bolt holes to fasten the motor to the upper turntable.

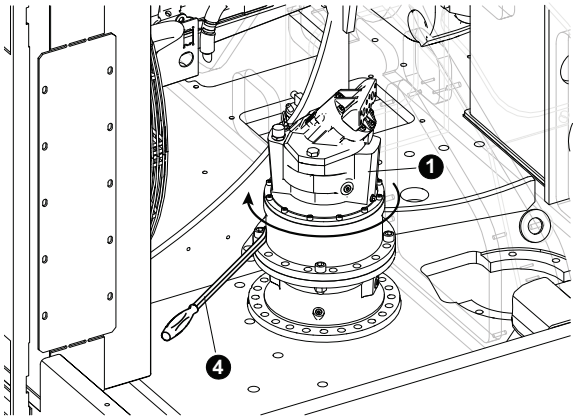

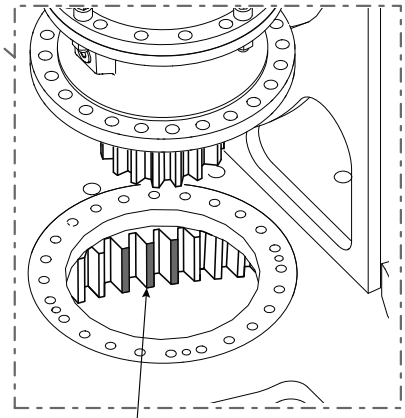

Green Paint on Swing Bearing Teeth

UPPER TURNTABLE - NV & LV
TL-775 SWING MOTOR INSTALLATION

REF	PART #	QTY	DESCRIPTION	SEE SECTION
1	57213	1	SWING MOTOR	
2	57870	24	BOLT - .625” X 2.75” (Torque to 230 ft.lbs (310 Nm)) (see note 1)	
3	57871	24	WASHER, SURELOK - 5/8” (SWING GEARBOX)	
4	23210	24	WASHER, SAE FLAT - .625” (EXTRA THICK)	

Note: 1
Use Loctite 272 (blue) during installation.

UPPER TURNTABLE - NV & LV
TL-775 AUTO GREASE SYSTEM

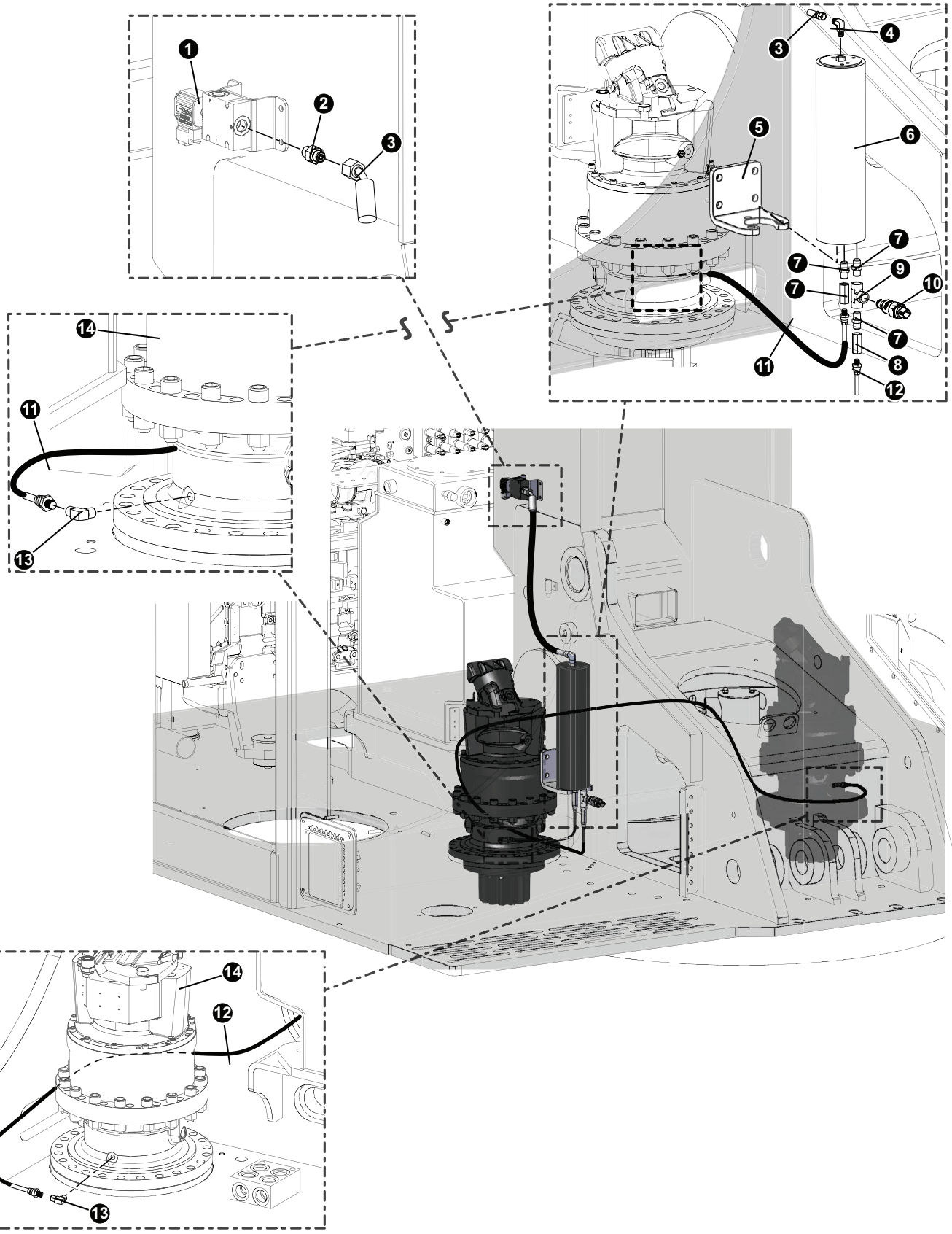

UPPER TURNTABLE - NV & LV
TL-775 AUTO GREASE SYSEM

REF	PART #	QTY	DESCRIPTION	SEE SECTION
1	57509	1	VALVE, AUTO GREASE SYSTEM	
2	15124	1	CONNECTOR, STR - FF1852T-0406S	
3	(See Description)	1	Hose **(Part #387TC29 04-04OS-04O4)** Valve to Accumulator	
4	57586	1	ELBOW, 90 4-5 GREASE ACCUMULATOR	
5	48344	1	PLATE, GREASE TUBE MOUNT	
6	57303	1	ACCUMULATOR, GREASE SYSTEM	
7	57498	2	VALVE, CHECK - ORIFICE GREASE SYSTEM	
9	55633	1	FITTING, TEE - MALE RUN #6 - 6 AOG5JG5-S	
10	57596	1	TRANSDUCER, PRESSURE - GREASE SYSTEM	
11	(See Description)	1	Hose **(Part #187TC36 08-08OS-08O9)** Grease, Accumulator to Swing Motor	
12	(See Description)	1	Hose **(Part #HLB65 02-02PS-04JS-W)** Swing Bearing	
13	22281	2	ELBOW, 90 - 5546132	

UPPER TURNTABLE - NV & LV

TL-775 UPPER TURNTABLE DOORS, COVERS, AND ACCESSORIES

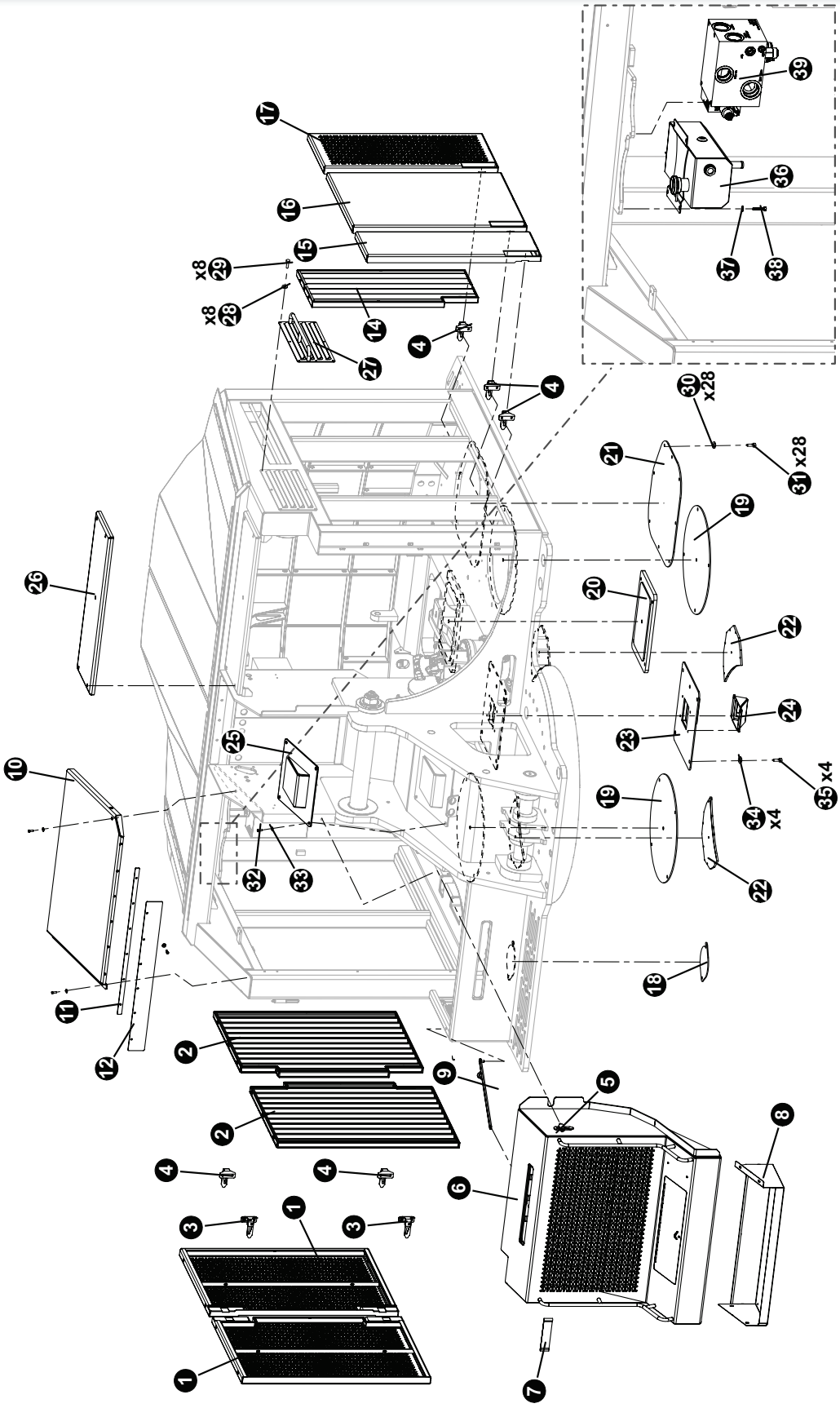

UPPER TURNTABLE - NV & LV
TL-775 UPPER TURNTABLE DOORS, COVERS, AND ACCESSORIES

REF	PART #	QTY	DESCRIPTION	SEE SECTION
1	48885	2	DOOR, COOLER SURROUND - TAIL	
2	48960	2	WELDMENT, SCREEN - COOLER DOOR TAIL	
3	51658	5	LATCH, CAM - DOOR L.H.	
4	51657	3	LATCH, CAM - DOOR R.H.	
5	19771	1	LATCH, CAM - SHORT (PUMP GUARD)	
6	48858	1	WELDMENT, FRONT DOOR - TAIL SWING	
7	51981	1	STRAP, DOOR STOP	
8	48697	1	WELDMENT, TOOLBOX TAILSWING	
9	46513	1	DOOR, FRONT PROP-ROD	
10	48315	1	WELDMENT, FOLD UP DOOR	
11	60141	1	BAR, RUBBER MOUNT FRONT DOOR	
12	46988	1	RUBBER, FRONT DOOR SEAL	
14	48870	1	WELDMENT, SCREEN - HYRO DOOR	
15	48905	1	DOOR, DEF COMPARTMENT	
16	60675	1	DOOR, ELECTRICAL	
17	48867	1	WELDMENT, DOOR - HYDRO	
18	12150	1	COVER, ACCESS - RAD FILL / STEER CYL	
19	48526	2	COVER, ROUND - LARGE	
20	62003	1	COVER, OIL PAN - 775	
21	48976	1	COVER, PUMP - TAILSWING	
22	48691	2	COVER, ACESS - PINION GEAR	
23	48994	1	MOUNT, CAMERA - 775	
24	60150	1	MOUNT, CAMERA IQAN - STAGE V	
25	48256	1	WELDMENT, ROTARY MANIFOLD COVER	
26	48377	1	PLATE, TOP ACCESS-CAB SIDE	
27	48927	1	GUARD, AIRINTAKE W/HANDLE	
28	15589	8	BOLT, 5/16X1” (A617)	
29	10801	8	WASHER, FLAT - .3125”	
30	10783	28	BOLT, 1/2-13X1” (A660)	
31	10804	28	WASHER, FLAT - .5”	
32	10783	4	BOLT, 1/2-13X1” (A660)	
33	10804	4	WASHER, FLAT - .5”	
34	60145	4	MOUNT, CAMERA - D SERIES	
35	10804	4	WASHER, FLAT - .5”	
36	60665	1	TANK, SURGE - D (Burp Tank)	
37	(See Description)	4	Bolt **(Supplier Part # 8050.059.0000)**	
38	(See Description)	4	Washer **(Supplier Part # 603874)**	
39	**57849**	**1**	**MANIFOLD, OIL COOLER CONTROL - D SERIES**	(System - See FH-1)

UPPER TURNTABLE - NV & LV
FRONT DOOR GUARDS, PANELS, AND COVERS INSTALLATION

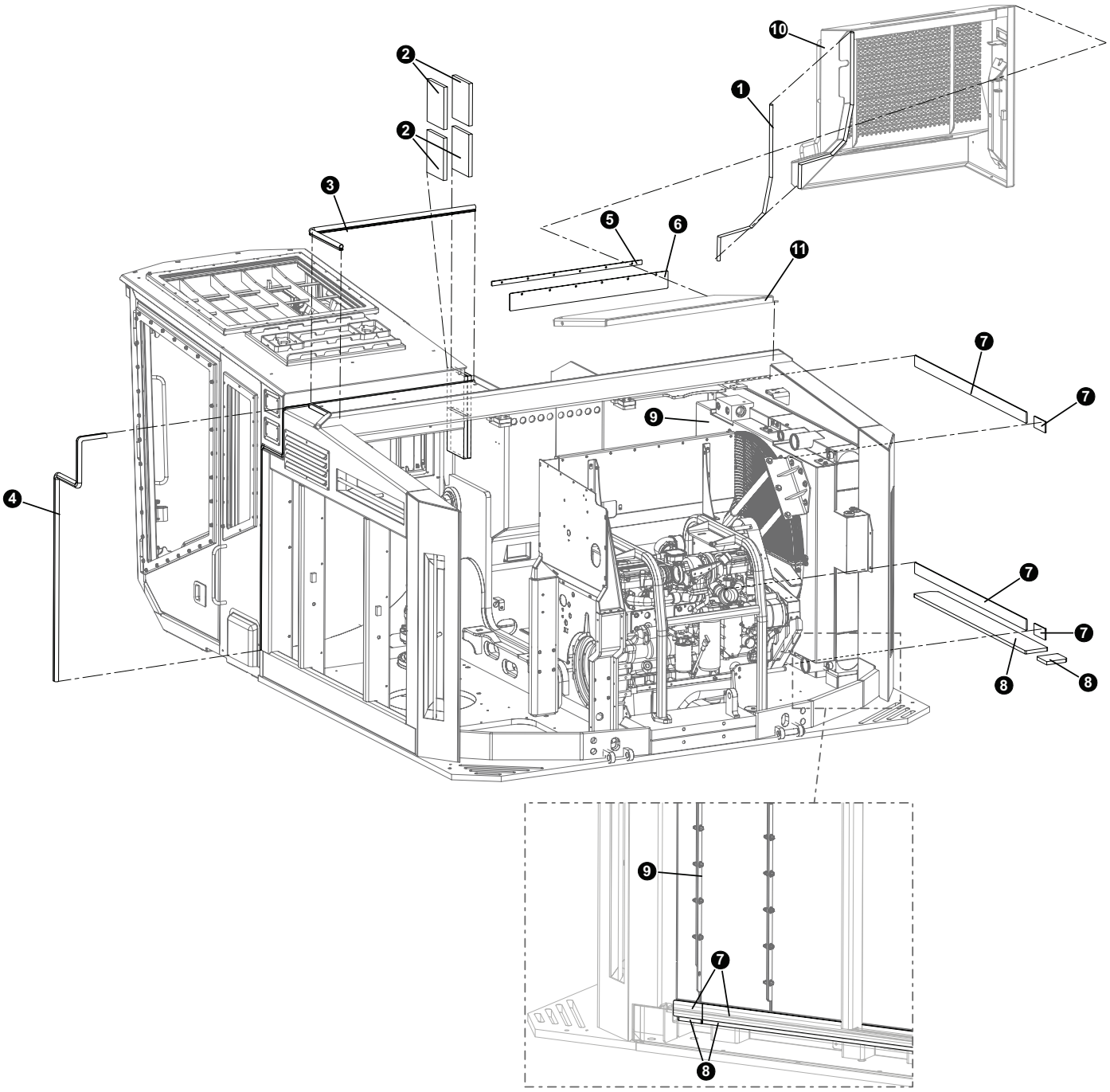

UPPER TURNTABLE - NV & LV
FRONT DOOR GUARDS, PANELS, AND COVERS INSTALLATION

REF	PART #	QTY	DESCRIPTION	SEE SECTION
1	18126	LF	WEATHERSTRIPPING, RUBBER-DOOR SEAL	
2	47344	4	FOAM, CONDENSED, CAB TO CHIMNEY	
3	54846	LF	CHANNEL, EDGE PROTECTOR - 1”	
4	54050	LF	WEATHERSTRIPPING, RUBBER SEAL	
5	60141	1	BAR, RUBBER MOUNT FRONT DOOR	
6	46988	1	RUBBER, FRONT DOOR SEAL	
7	61111	2	RUBBER, COOLER FRONT - 1 STD PC + 1PC CUT TO SIZE	
8	61247	2	RUBBER, COOLER FRONT, 3/4” THICK - 1 STD PC + 1PC CUT TO SIZE	
9	(Click Here)	1	RADIATOR/OIL COOLER	UP-3
10	(Click Here)	1	WELDMENT, FRONT DOOR - TAIL SWING	UP-1

UPPER TURNTABLE - SELF-LEVELING
GULLWING INSTALLATION

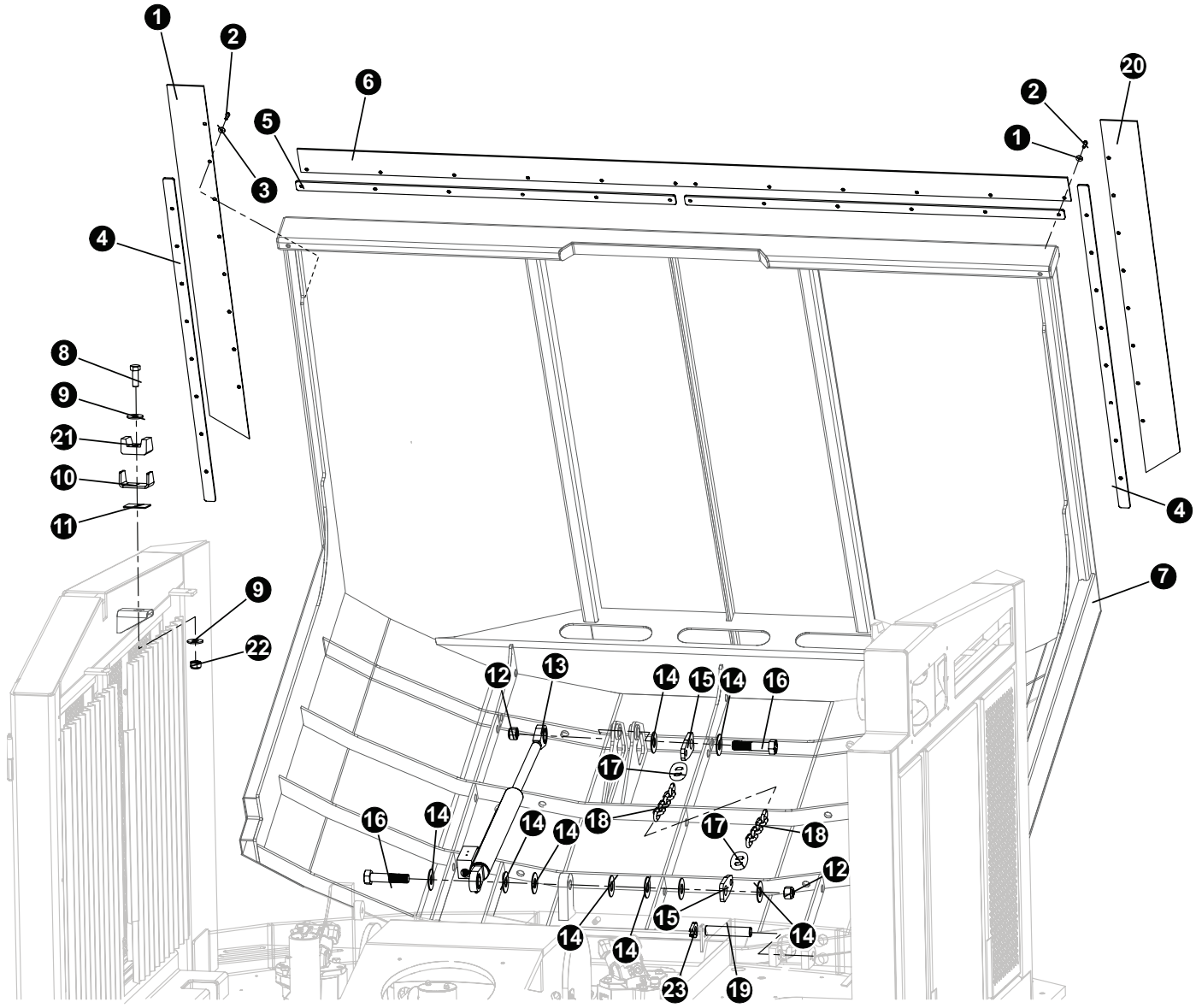

UPPER TURNTABLE - SELF-LEVELING
GULLWING INSTALLATION

REF	PART #	QTY		DESCRIPTION	SEE SECTION
1	48625-R	1		RUBBER, GULLWING - TAIL RIGHT-HAND	
2	11707	27		BOLT - .375” X 1”	
3	10802	27		WASHER, FLAT - .375”	
4	48469	2		PLATE, GULLWING - RUBBER HOLD DOWN SIDE	
5	48457	2		PLATE, GULLWING - RUBBER HOLD DOWN	
6	48626	1		RUBBER, GULLWING FRONT - TAIL	
7	48835	1		DOOR, GULLWING - ASSEMBLY	
8	10823	4		BOLT - .3125” X 2”	
9	10801	4		WASHER, FLAT - .3125”	
10	54512	2		CHANNEL, ISOLATOR MOUNT - GULLWING	
11	54520	2		SPACER, GULLWING ISOLATOR	
12	52026	2		NUT,HEX GULLWING CYL. - 1.25” - GRD 9	
13	(Click Here)	1	🕮	GULL WING CYLINDER	UP-1
14	22531	9		WASHER, SAE FLAT - 1.25”	
15	54515	1		LINK, GULLWING SAFETY CHAIN	
16	52025	2		BOLT, GULLWING CYL. - 1.25” - 7 X 7”	
17	54260	2		CLEVIS, 3/8” - GULLWING (2 PER) NEW	
18	55715	1		CHAIN, 23 LINK - GULLWING GR 8100	
19	48390	2		PIN, GULLWING PIVOT - WELDMENT	
14	18253	2		NUT, LOCK - 1”	
15	46496	1		LINK, GULLWING SAFETY CHAIN	
20	48625-L	1		RUBBER, GULLWING - TAIL LEFT-HAND	
21	54511	2		ISOLATOR, GULLWING MOUNTING-UHMW BLOCK	
22	10812	8		NUT, LOCK - .3125”	
23	48330	2		PLATE, PIN FLAG	

🕮 See reference page for component or assembly breakdown.

UPPER TURNTABLE - SELF-LEVELING
ROTARY MANIFOLD

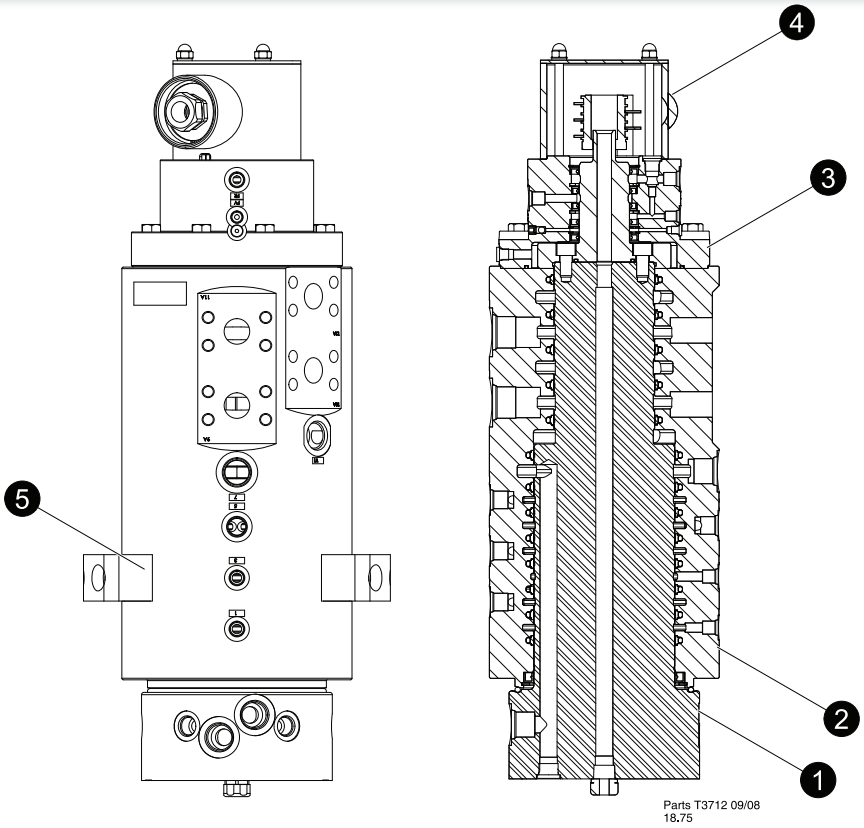

REF	PART #	QTY		DESCRIPTION	SEE SECTION
-	57996-UP	1		MANIFOLD, ROTARY - 14 PORT TRACK (Self_Leveling and Non-Leveling)	
	57997-UP	1	❑	MANIFOLD, ROTARY - 14 PORT, 8 ELECT- TRACK (AUTO-Leveling ONLY)	
1	TP1414001	1		SPOOL, ROTARY -	
2	TP1414002	1		BARREL, 14 PASS ROTARY -	
3					
4	54547-UP	1		WIPER, ELECTRIC - 4 CIRCUIT TRACK Standard	
-	54100-UP			SLIP RING UNIT (8 WIRE) ***Optional for Auto Level***	
5		2		MOUNTING PLATE - HD1214003	
-		8		BOLT, Allen M16 X 40mm (for mounting plate)	
-	54354-UP	1	⌘	KIT, SEAL REPAIR	

📖 See reference page for component or assembly breakdown.
❑ Kit or Assembly - includes all items indented underneath.
⌘ Parts Included in Seal Repair Kit.

Please contact TimberPro Dealer or Factory before attempting to disassemble or repair rotary manifold. Rotary manifold needs to be serviced by authorized TimberPro service technicians only.

NOTE:
Parts shown and labeled for 57996 and 57997 are same on this page. Connector at base is only difference between 57996 (non-leveling) and 57997 (leveling) rotary manifolds.

UPPER TURNTABLE - SELF-LEVELING
GULL WING LIFT CYLINDER

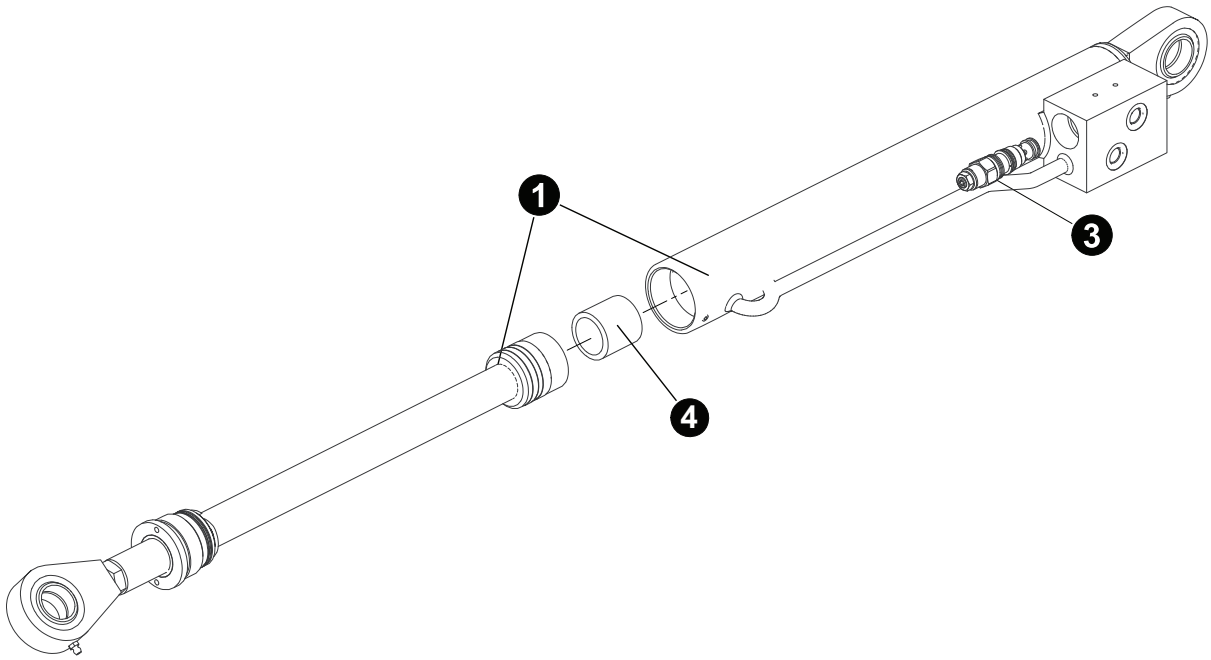

REF	PART #	QTY		DESCRIPTION	SEE SECTION
1	57848-UP	1	❑	CYLINDER, GULLWING LIFT - COLUMBUS	
3	(See Description)	1		CARTRIDGE, COUNTER BALANCE **(Supplier Part #CBCA-LHN)**	
4	(See Description)	1		SPHERICAL BUSHING (Supplier Part # GEZ020ES)	
	(See Description)	1	⌘	SEAL KIT, (**Supplier Part #: RKT2.500-1182**)	

📖 See reference page for component or assembly breakdown.
❑ Kit or Assembly - includes all items indented underneath.

UPPER TURNTABLE - SELF-LEVELING
GULL WING LIFT PUMP

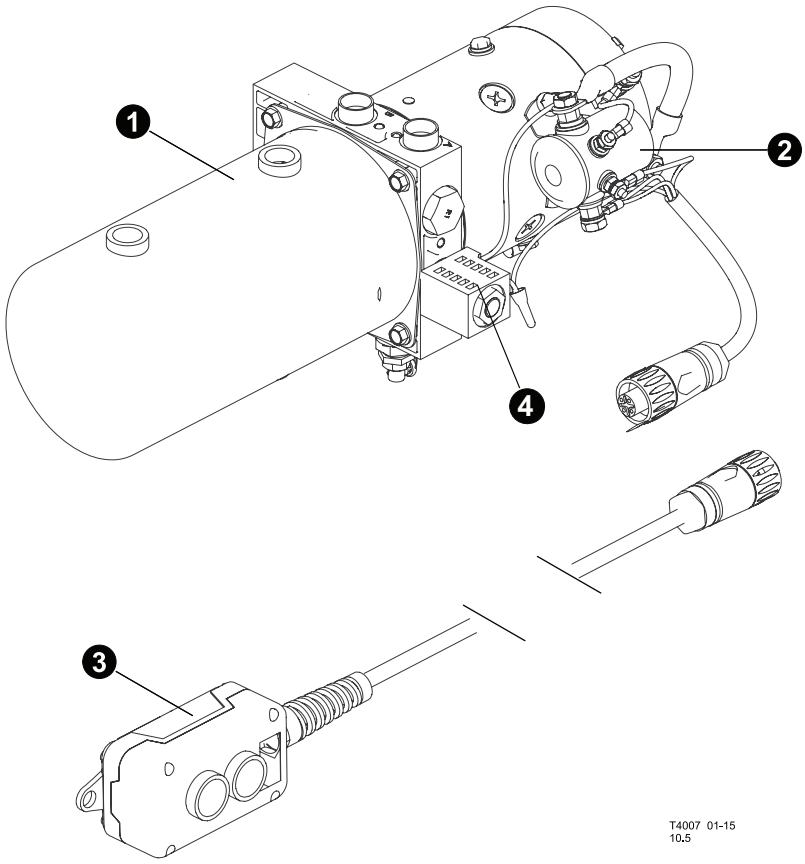

REF	PART #	QTY	DESCRIPTION	SEE SECTION
1	51577-UP	1	❑ PUMP, POWER UNIT - GULL WING W/PENDANT	
2	57185-UP	1	24VDC SOLENOID (Supplier Part # K-03463)	
3	395-23	1	PENDANT w/2 buttons	
4	54318-UP	1	COIL	
	17778-240	1	PENDANT	
	07995	1	BOX W/ SWITCHES	
	12537	1	base	
	06104	1	bottle	
	03171	1	breather cap, bottle	
	07900	1	clamp	
	00455-d	1	cart.	
	07193-D	1	CART	
	18723-D	1	COIL - SOL.	
	K-08120	1	STARTER MOTOR	
	12637-150	1	pump	
	2445-1	1	MOTOR KTI	
	64-11	1	pendant	
	64-23	1	short cable	
	PL-0.80	1	KTI PUMP	

SECTION UP-2
UPPER TURNTABLE HYDRAULIC TANK & DEF TANK INSTALLATION

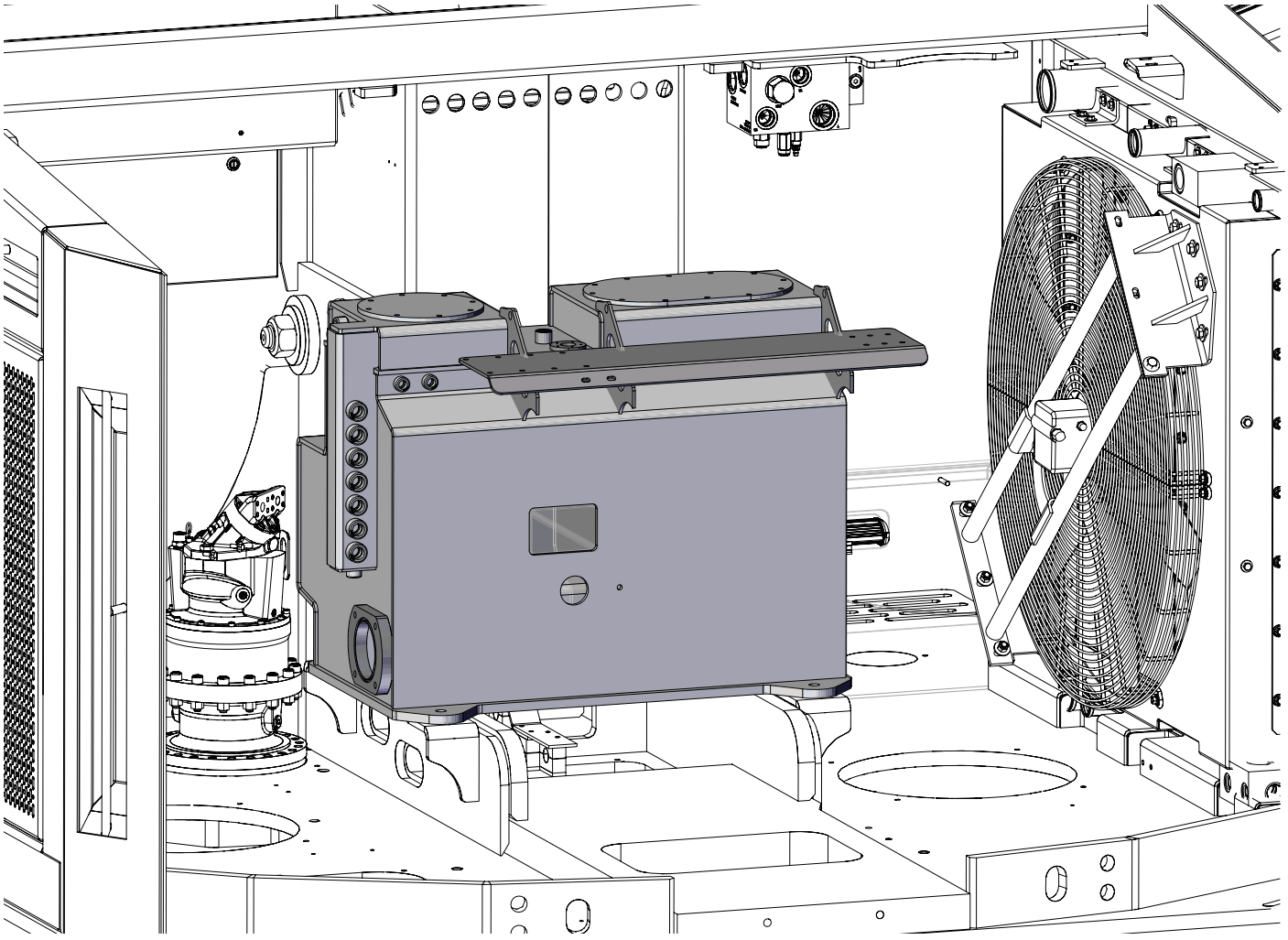

UPPER TURNTABLE - NV & LV

TL-775 HYDRAULIC TANK INSTALLATION, FILTER, AND COVER INSTALLATION

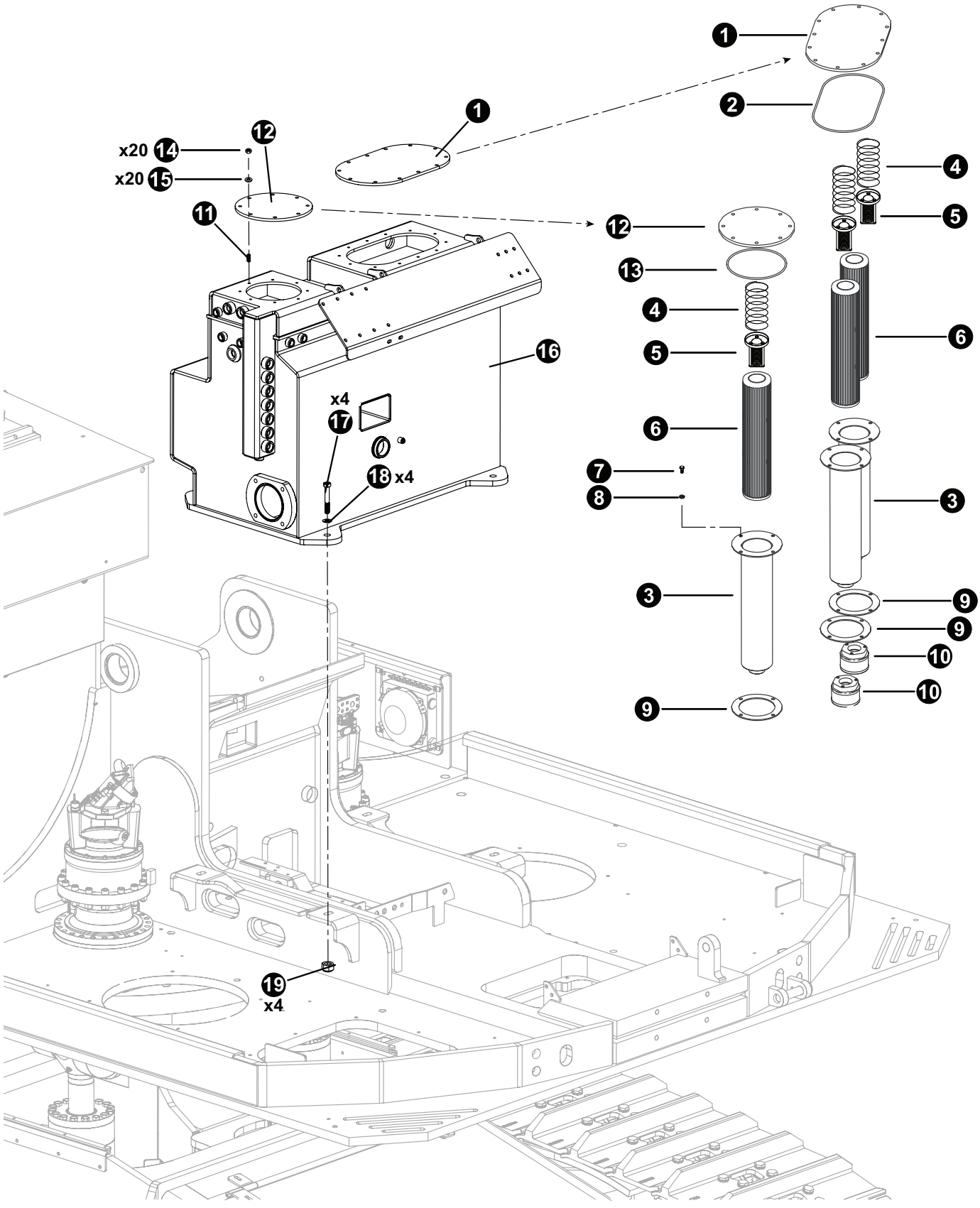

UPPER TURNTABLE - NV & LV

TL-775 HYDRAULIC TANK INSTALLATION, FILTER, AND COVER INSTALLATION

REF	PART #	QTY		DESCRIPTION	SEE SECTION
1	44738-UP	1		COVER - RETURN FILTER	
2	54417-UP	1		O-RING	
3	51621-UP	3		FILTER KIT, HYD. TANK MAIN RETURN	
4		3	❑	SPRING, CASE DRAIN FILTER	
5		3		BYPASS CHECK, CASE DRAIN FILTER	
6	22647-UP	3		ELEMENT, RETURN FILTER (Case Drain)	
7	15542-UP	8		BOLT - .375” X .75”	
8	15528-UP	8		WASHER, SAE FLAT - .375”	
9		1		SEAL, Gasket (LFT-642)	
10	54851-UP	1		DIFFUSSER, RETURN LRT FILTER - C SERIES	
11	42393-UP	1		STUD - .5”-13NC X .5”-20NF X 2.0LG”	
12	44737-UP	1		COVER - CASE DRAIN	
13	15600-UP	1		O-RING - 8” DIA. -369	
14	42394-UP	10		NUT, HEX .5-20NF	
15	15534-UP	10		WASHER, SAE FLAT - .5”	
16	(See Next Page)	1		HYDRAULIC TANK ASSEMBLY	See Next Page
17	10775	4		BOLT - .75” X 2.5”	
18	15550	4		WASHER, SAE FLAT - .75”	
19	10817	4		NUT, LOCK - .75”	

UPPER TURNTABLE - NV & LV
TL-775 HYDRAULIC TANK COMPONENT INSTALLATION

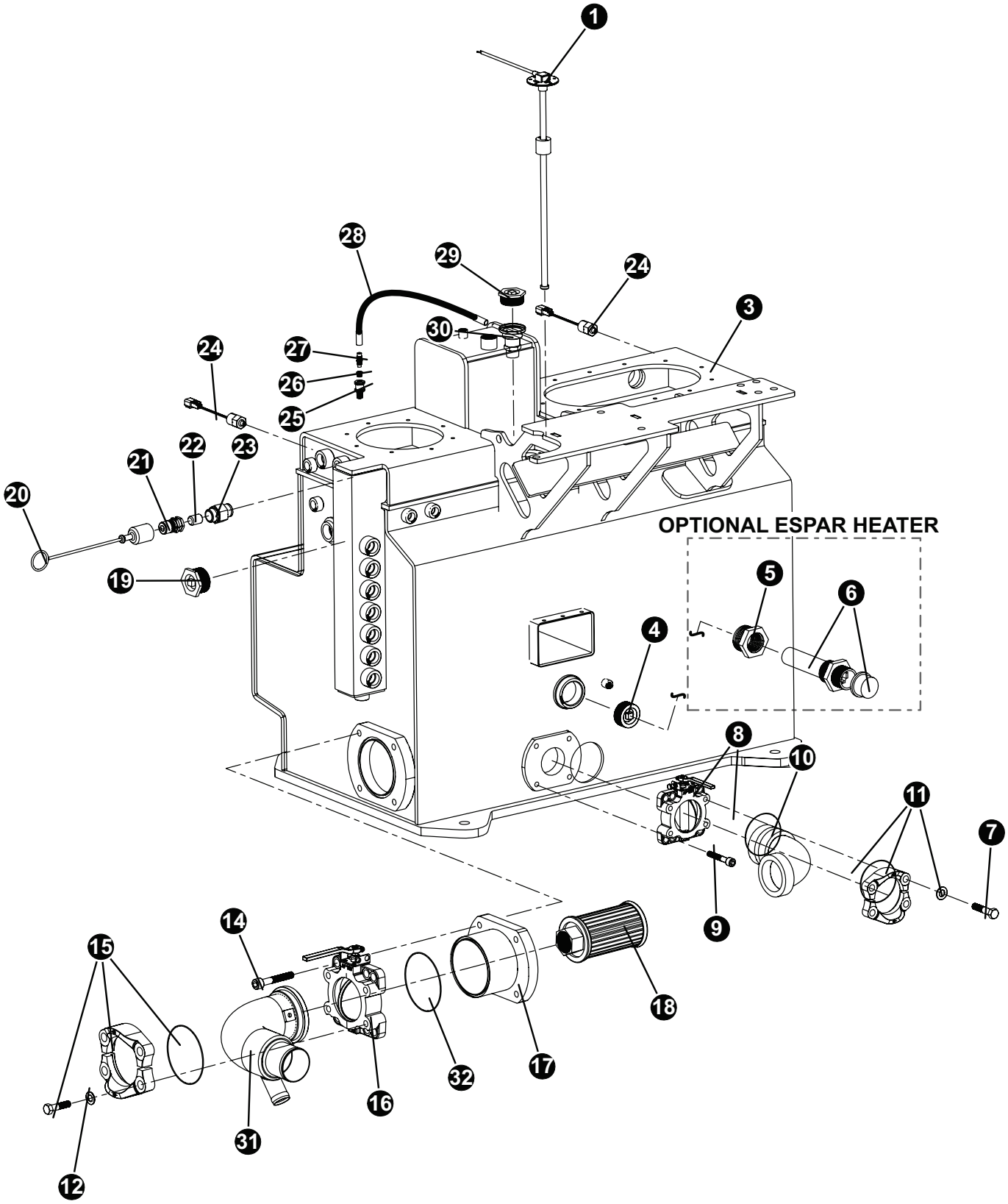

UPPER TURNTABLE - NV & LV
TL-775 HYDRAULIC TANK COMPONENT INSTALLATION

REF	PART #	QTY	DESCRIPTION	SEE SECTION
1	57264	1	SENDER, HYD OIL LEVEL W/FLOAT (TL765)	
3	48920	1	WELDMENT, HYD TANK - TAIL D SERIES	
4	53105	1	PLUG, BLACK PIPE - 2.0" HYD. TANK 830/630	
5	26397	1	BUSHING, BLACK - 2" X 1.25" (OPTIONAL)	
6	20069	1	ELEMENT, HEATER - HYD. TANK (120V 600W) (OPTIONAL)	
7	15551	1	BOLT - 12MM-1.75P X 40MM	
8	57834	1	VALVE, BUTTERFLY (2.5") - DISC SAW	
9	(See Description)	1	1/2-13 X 1 1/4" UNC - PART # 3551 (LAWSON #)	
10	58588	1	FLANGE, ELBOW - 23867-32-40	
11	15193	1	KIT, SPLIT FLANGE - 2.5" (CODE 61)	
14	23095	1	BOLT, ALLEN HEAD - .625" x 2"	
15	51625	1	KIT, FLANGE - SUCTION TUBE (4")	
	(See Description)	4	BOLT (Supplier Part # 1-246-90)	
	51725	1	O-RING	
16	54786	1	VALVE, SHUT OFF - BUTTERFLY (4")	
17	42306	1	PLATE, INTER.-SUCTION PORT 100mm VALVE	
18	15842	1	FILTER, SCREEN - IMPLEMENT	
19	24308	2	SIGHT GLASS	
20	55617	1	CAP, QUICK CONNECT - RUBBER (RED)	
21	55620	1	NIPPLE, 60 SERIES - H6-63-T12	
22	55698	1	FITTING, 8-1/2 F50F-S	
23	20067	1	BUSHING, REDUCER - 6410-12-8	
24	57818	2	SWITCH, PRESSURE - SCHROEDER D-series	
25	15652	1	VALVE, CHECK - HYDRAULIC/FUEL TAN	
26	11318	1	BUSHING, REDUCER - 5406-6-4	
27	16990	1	CONNECTOR, STR HOSE BARB - 4244-5-4	
28	16238	5 ft #	HOSE, FUEL LINE (BULK ROLL) - .3125"	
29	17156	1	STEM, HYDRAULIC TANK RELIEF CAP	
30	18135	1	CAP, HYD. RESERVOIR RELIEF - 13 PSI	
31	60752	1	TUBE, SUCTION 765 D	
32	51726	2	O-RING, HDYRAULIC TANK	

📖 See reference page for component or assembly breakdown.
❑ Kit or Assembly - includes all items indented underneath.
✂ Sold in bulk per foot - Please specify length when ordering.

UPPER TURNTABLE - NV & LV
VACUUM PUMP BREAKDOWN

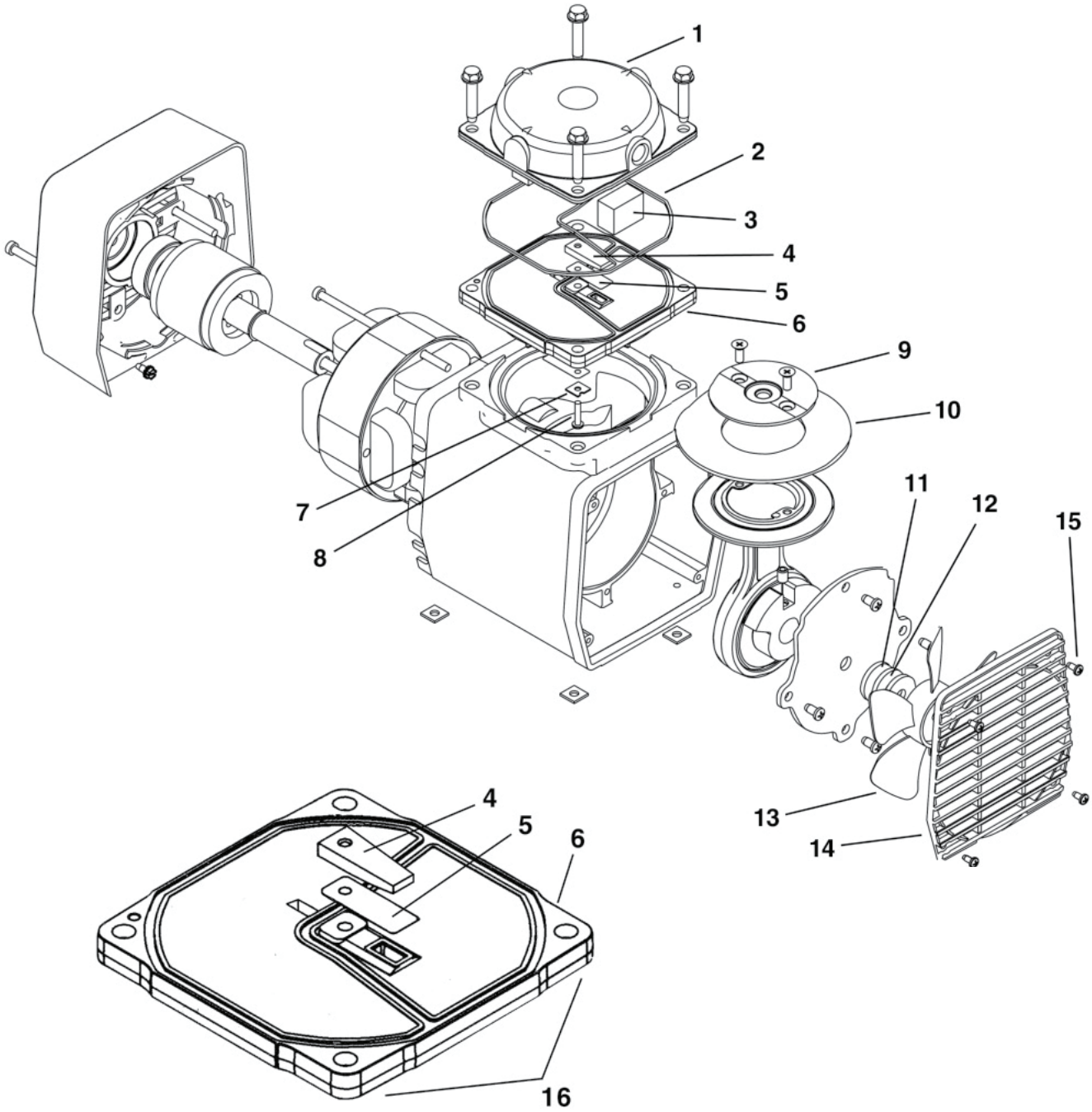

UPPER TURNTABLE - NV & LV
VACUUM PUMP BREAKDOWN

REF	PART #	QTY	DESCRIPTION	SEE SECTION
-	51615-UP	1	❑ VACUUM PUMP	
1	(See Description)	1	HEAD (**Supplier Part #** AP500)	
2	(See Description)	1	O-RING, HEAD (**Supplier Part #** AP513)	
3	(See Description)	2	FILTER, MUFFLER (**Supplier Part #** AT712A)	
4	(See Description)	1	VALVE, LIMITER (**Supplier Part #** AP110)	
5	(See Description)	2	VALVE, LEAF (**Supplier Part #** AF817)	
6	(See Description)	1	PLATE, VALVE (**Supplier Part #** AP504)	
7	(See Description)	1	RETAINER, VALVE (**Supplier Part #** AF819A)	
8	(See Description)	1	SCREW, VALVE (**Supplier Part #** BB330A)	
9	(See Description)	1	PLATE, RETAINER (**Supplier Part #** AF809)	
10	(See Description)	1	DIAPHRAGM, COMPRESSOR (**Supplier Part #** AF818A)	
10	(See Description)	1	DIAPHRAGM, VACUUM (**Supplier Part #** AF818B)	
11	(See Description)	3	SPACER, FELT (**Supplier Part #** AA929)	
12	(See Description)	1	SPACER (**Supplier Part #** AD996)	
13	(See Description)	1	FAN (**Supplier Part #** AF533)	
14	(See Description)	1	GRILL (**Supplier Part #** AF807)	
15	(See Description)	4	RIVET (**Supplier Part #** AP534)	
16	(See Description)	1	ASSEMBLY, VALVE PLATE (**Supplier Part #** AP519)	

📖 See reference page for component or assembly breakdown.
❑ Kit or Assembly - includes all items indented underneath.
✂ Sold in bulk per foot - Please specify length when ordering.

UPPER TURNTABLE - NV & LV
DEF TANK ASSEMBLY AND INSTALLATION

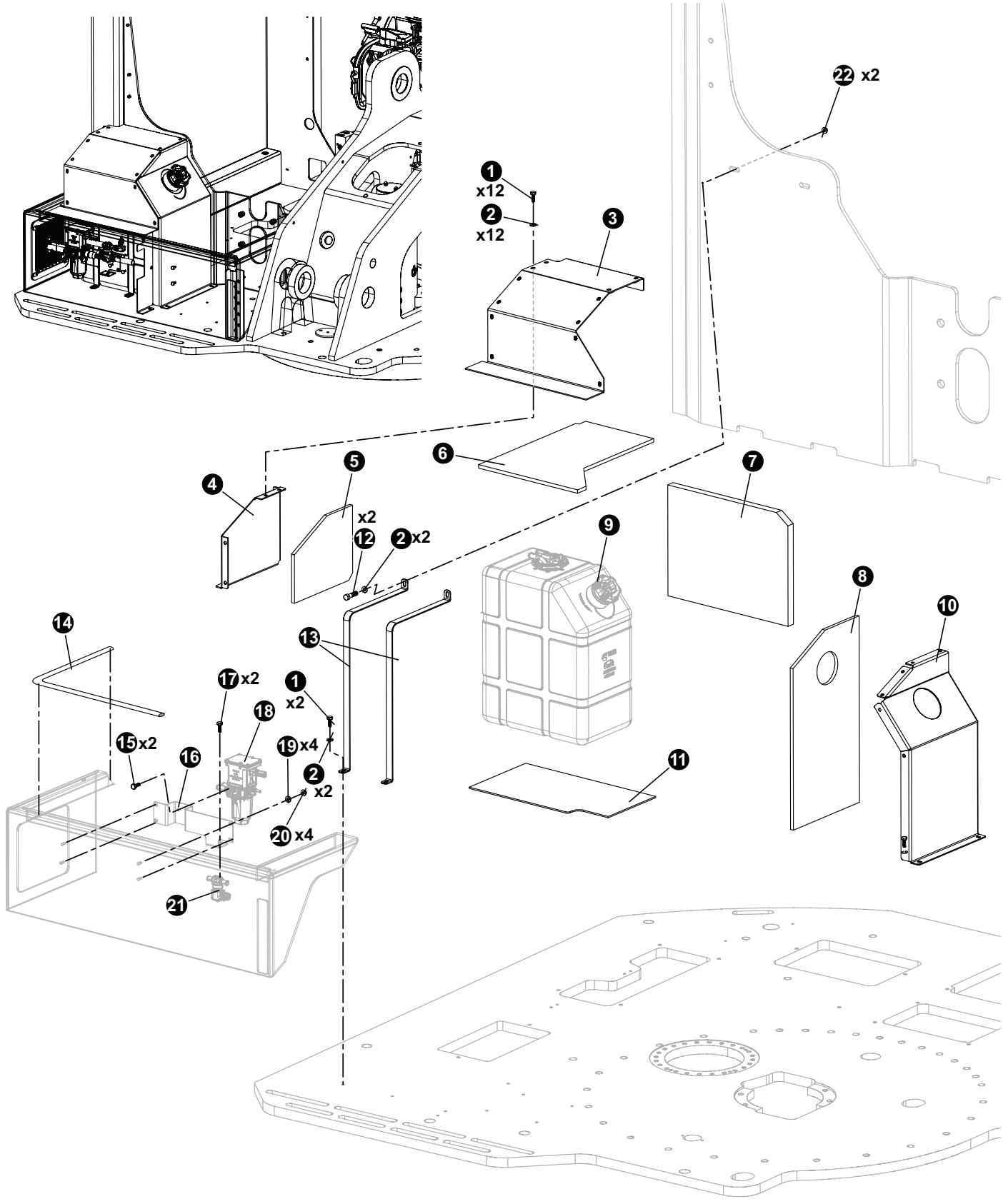

UPPER TURNTABLE - NV & LV
DEF TANK ASSEMBLY AND INSTALLATION

REF	PART #	QTY	DESCRIPTION	SEE SECTION
1	15542	14	BOLT - .375” X .75”	
2	10802	16	WASHER, FLAT - .375”	
3	60482	1	PLATE, DEF TANK SHROUD	
4	60488	1	WELDMENT, DEF TANK ENDCOVER	
5	58033	1	INSULATION, DEF TANK END COVER	
6	58034	1	INSULATION, DEF TANK TOP COVER	
7	58036	1	INSULATION, UPPER TO DEF TANK	
8	58035	1	INSULATION, DEF TANK FILL PANEL	
9	(Click Here)	1	DEF TANK 15 GAL.	EE-1
10	60492	1	WELDMENT, DEF TANK SHROUD END	
11	58037	1	FLOORMAT, DEF TANK D-MOD	
12	10822	1	BOLT - .3125” X 1.25”	
13	47942	1	STRAP, DEF TANK - CUMMINS	
14	18126	1	WEATHERSTRIPPING, RUBBER-DOOR SEAL (Lineal Foot)	
15	(See Description)	4	BOLT, ALLEN HEAD, M8x20mm **(Lawson Part Number: 80511)**	
16	(Click Here)	1	PLATE, DEF DOSER MOUNT - STAGE V	EE-1
17	(See Description)	1	BOLT, ALLEN HEAD, M5x12mm **(Lawson Part Number: 80498)**	
18	(Click Here)	1	PUMP, DOSER	EE-1
19	10800	4	WASHER, FLAT - .25”	
20	10811	4	NUT, LOCK - .25”	
21	(Click Here)	1	VALVE, COOLANT CONTROL	EE-1

📖 See reference page for component or assembly breakdown.
❑ Kit or Assembly - includes all items indented underneath.
✂ Sold in bulk per foot - Please specify length when ordering.

PAGE INTENTIONALLY LEFT BLANK

SECTION UP-3
RADIATOR AND OIL COOLER FAN DRIVE SYSTEM

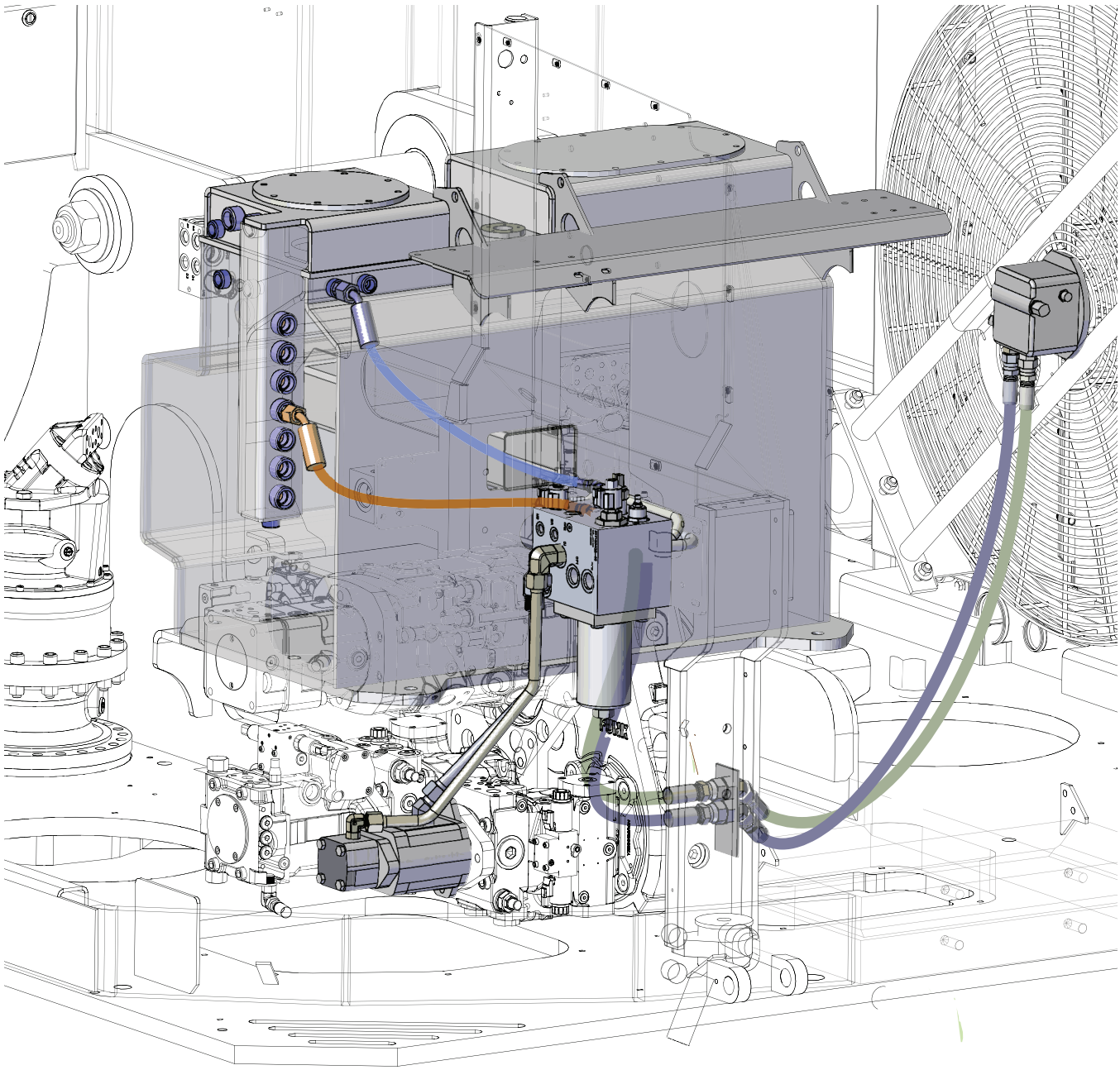

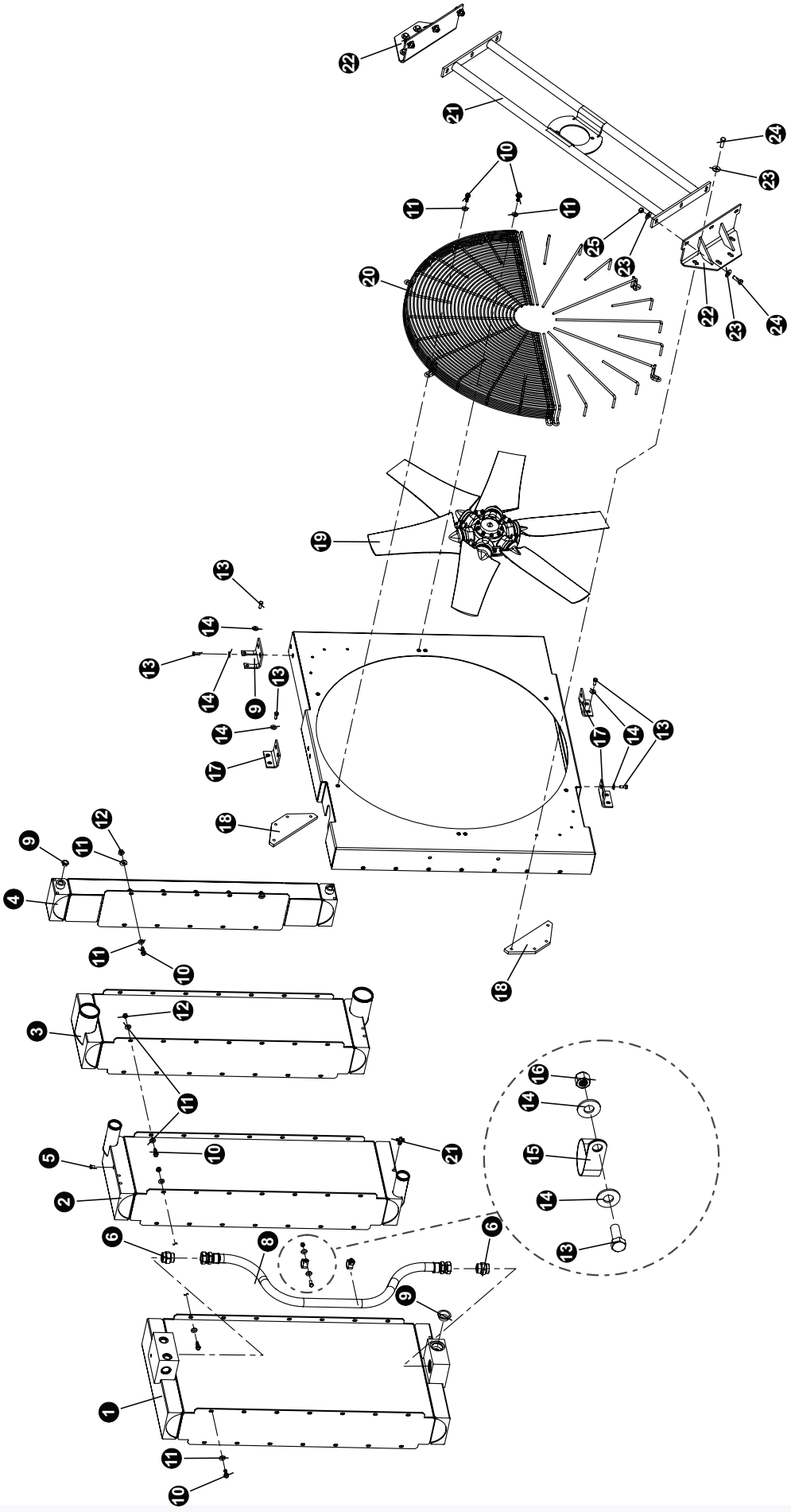

UPPER TURNTABLE - NV & LV
TL-775 RADIATOR/OIL COOLER BREAKDOWN

REF	PART #	QTY	DESCRIPTION	SEE SECTION
-	58128	1	❑ RADIATOR / OIL COOLER - STAGE V TAIL SWING (COMPLETE UNIT)	
1	(See Description)	1	Core Hyd Oil Cooler **(Supplier Part #** 3918.014.1000-58128)	
2	(See Description)	1	Radiator 1 **(Supplier Part #** 3918.014.2000-70-58128)	
3	(See Description)	1	Charge Air Cooler **(Supplier Part #** 3918.014.3000-58128)	
4	(See Description)	1	Gearbox Oil Cooler **(Supplier Part #** 3918.014.1700-58128)	
5	(See Description)	1	Insert **(Supplier Part #** 603275-58128)	
6	(See Description	2	Straight Fitting (**Supplier #** 609622-58128)	
8	(See Description)	1	HYD Hose Assembly (Supplier P# 3918.006.0000-58128)	
10	(See Description)	60	Bolt **(Supplier Part #** 8050.059.0000-58128)	
11	(See Description)	110	Washer **(Supplier Part #** 603784-58128)	
12	(See Description)	38	Nut **(Supplier Part #** 600862AX-58128)	
13	(See Description)	18	Bolt **(Supplier Part #** 8050.058.0000_8050.058.0000-58128)	
14	(See Description)	20	Washer **(Supplier Part #** 8050.036.0000-58128)	
15	(See Description)	2	P-Clip **(Supplier Part #** 8055.008.0000)	
16	(See Description)	2	Nut **(Supplier Part #** 8049.091.0000-58128)	
17	(See Description)	3	Bracket **(Supplier Part #** 3806.061.0001-58128)	
18	(See Description)	2	Support **(Supplier Part #** 3918.013.4012-58128)	
19	(See Description)	1	Fan **(Supplier Part #** M13068-58128)	
20	(See Description)	1	Fan Cover **(Supplier Part #** 3918.003.4040-58128)	
21	(See Description)	1	Fan Motor Mount **(Supplier Part #** 3918.013.5000-58128)	
22	(See Description)	2	Mounting Bracket **(Supplier Part #** 3918.013.5002-58128)	
23	(See Description)	20	Washer (**Supplier Part #** 601827-58128)	
24	(See Description)	14	Bolt (**Supplier Part #** 8050.066.0000)	
25	(See Description)	6	(**Supplier Part #** 8049.062.0000)	

📖See referenced page for component or assembly breakdown.

❑ Kit or Assembly - inlcudes all items indented underneath.

58168 - core oil cooler
- 3918.013.1700 AC COND.
- 3918.013.3000 CAC
- 3918.013.2000 RAD
- 3918.013.1000 HOC

UPPER TURNTABLE - NV & LV
TL-775 RADIATOR/OIL COOLER FAN DRIVE MOTOR

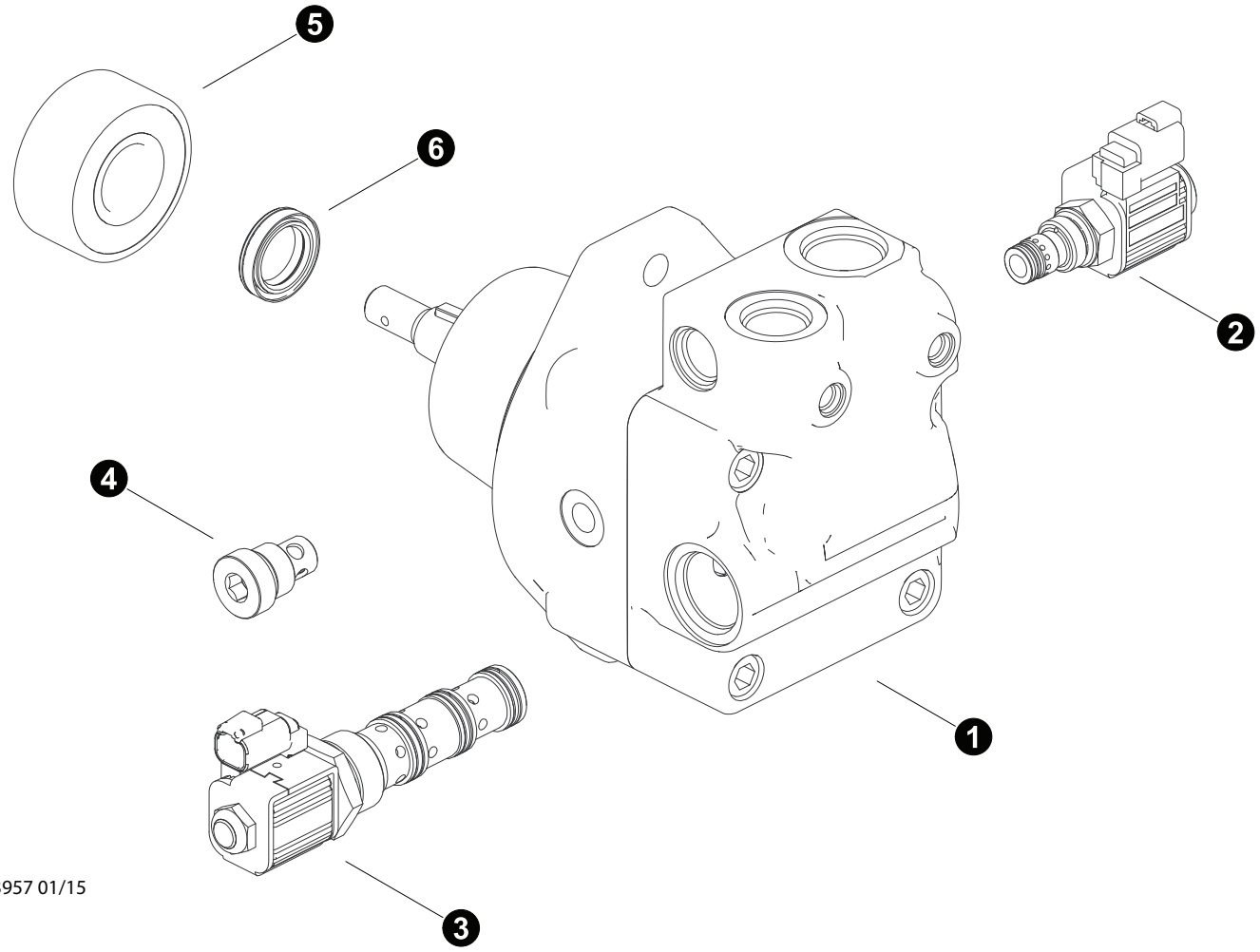

Parts T3957 01/15
25

REF	PART #	QTY		DESCRIPTION	SEE SECTION
1	55215-UP	1	❑	MOTOR, FAN DRIVE - RADIATOR W/FAN CONTR0	
2	57603-UP	1		ASSEMBLY, Fan Reverse Valve	
3	57604-UP	1		ASSEMBLY, Fan Control	
4	(See Description)			ASSEMBLY, Check Valve **(Supplier Part #: S24_94046)**	
5	(See Description)	1		BEARING **(Supplier Part #: 230_90022_3)**	
6	57670	1		SHAFT SEAL	

📖See referenced page for component or assembly breakdown.

❑ Kit or Assembly - inlcudes all items indented underneath.

SECTION UP-4
UPPER TURNTABLE DECALS

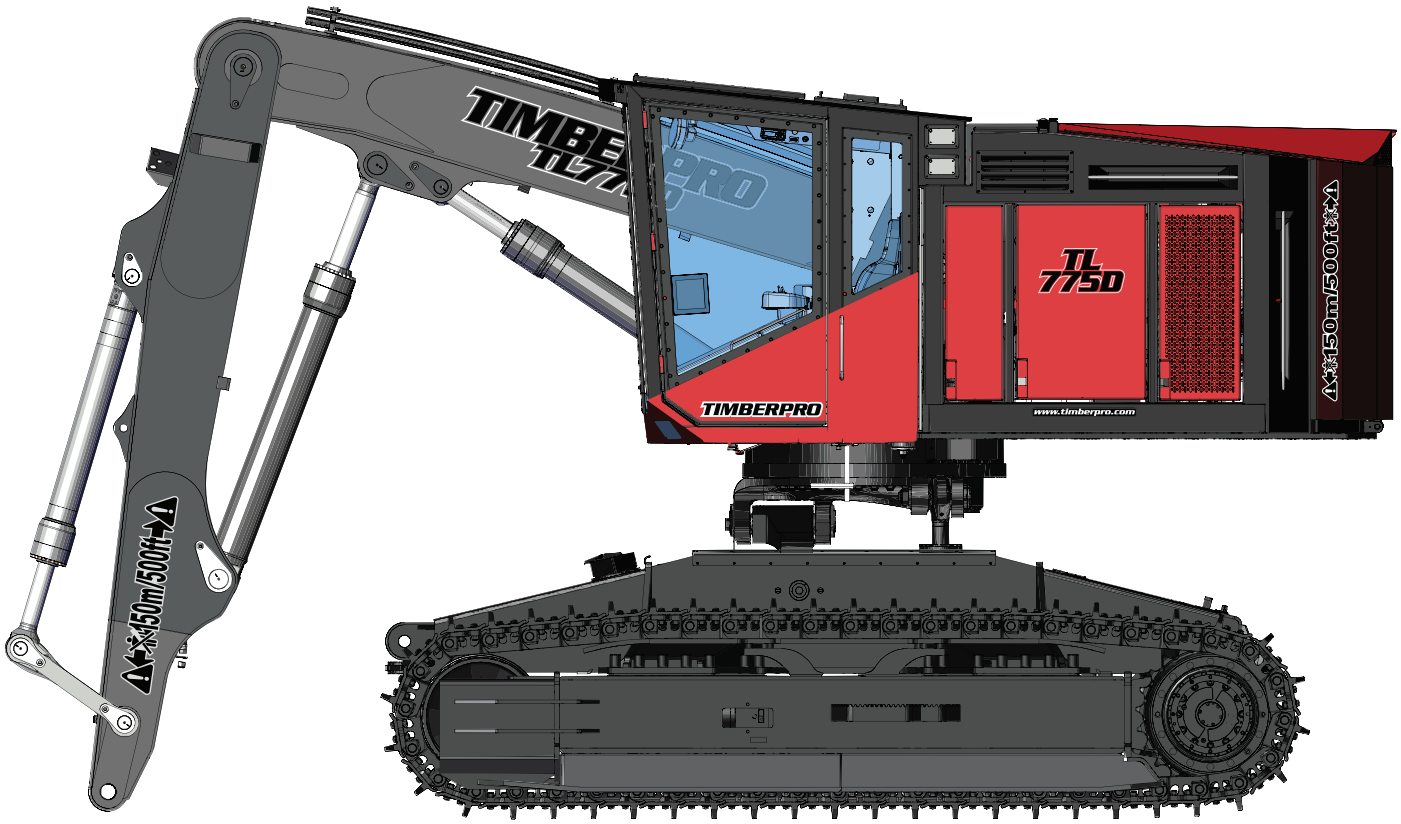

UPPER TURNTABLE - NV & LV
UPPER TURNTABLE AND BOOM EXTERIOR DECALS

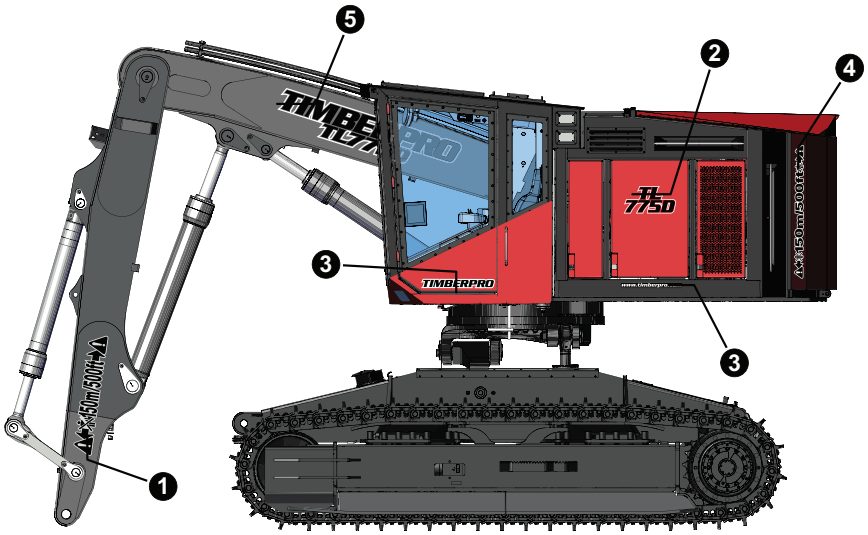

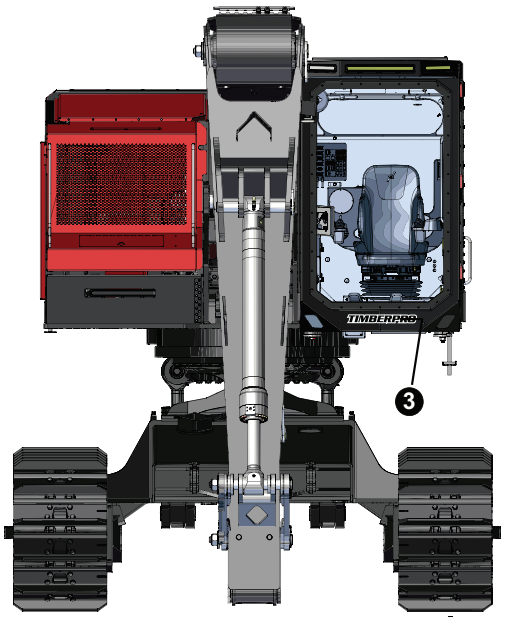

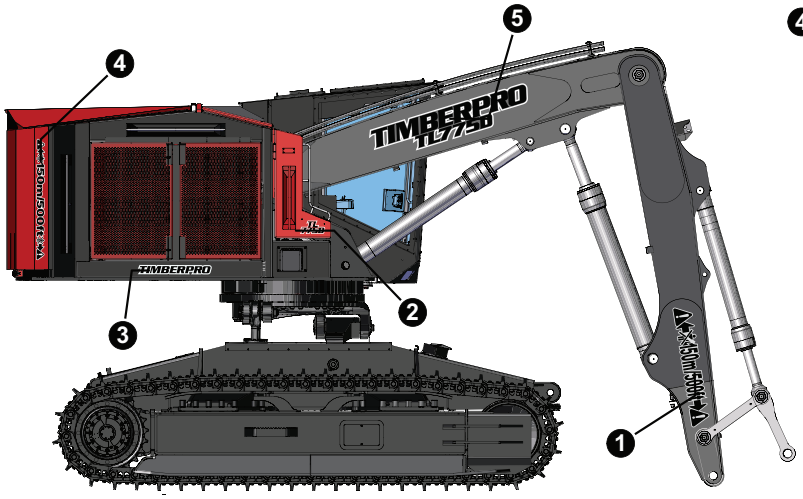

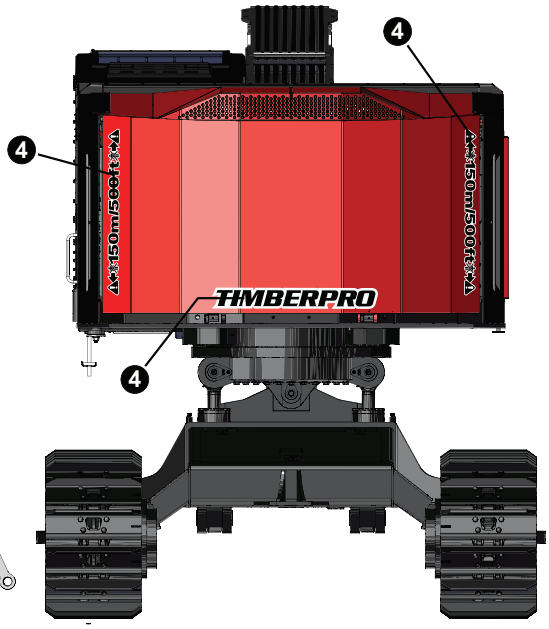

UPPER TURNTABLE - NV & LV
UPPER TURNTABLE AND BOOM EXTERIOR DECALS

REF	PART #	QTY	DESCRIPTION	SEE SECTION
1	57920 (Kit #)	1	DECAL, BOOM Universal Keep Clear (Kit Includes 2 Decals)	
2	58126 (Kit #)	1	DECAL, MODEL # - **TL775-D** (Kit Includes 3 Decals; one 16” Decal and two 10” decals)	
2	58249 (Kit #)	1	DECAL, MODEL # - **TN775-D** (Kit Includes 3 Decals; one 16” Decal and two 10” decals)	
3	55493 (Kit #)	1	KIT, DECAL - “D” SERIES Outside (Kit Includes 7 Decals:) Two 20” “**TimberPro**” Decals Three 10” **TimberPro**” Decals Two “**www.timberpro.com**” Decals	
4	57628 (Kit #)	1	DECAL, KEEP CLEAR - GULLWING (Kit Includes 3 Decals; two “**Keep Clear**” Decals and one “**TimberPro**” Gullwing Decal)	
5	58127 (Kit #)	1	DECAL, TIMEBERPRO TL775D (Kit Includes 2 Decals)	

UPPER TURNTABLE - NV & LV
UPPER TURNTABLE CAB DECALS

1 (KIT ONLY)

TIMBERPRO

CAUTION

SEVERE STRUCTURAL DAMAGE CAN OCCUR
IF TAPERED HUB ASSEMBLIES ARE NOT KEPT TIGHT

2

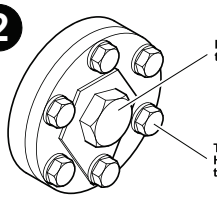

THE FOLLOWING BREAK-IN
PROCEDURE MUST BE PERFORMED:

1. Torque tapered hub retaining bolts after the first 2 hours of operation (5 pivots, 1 pivot if no cab level system).
2. Torque tapered hub retaining bolts each day of operation until the tapered hub is seated (the tapered hub is seated when the retaining bolts no longer loosen with operation).
3. Torque tapered hub retaining bolts after every 50 hours of operation.
4. Visually inspect tapered hub pivots daily.

PN# 18066

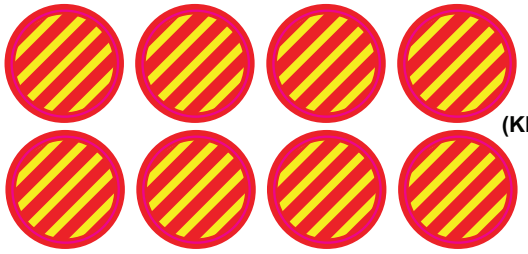

3 (KIT ONLY)

WARNING: USE OF THIS ROPS IN A DAMAGED, MODIFIED OR ABUSED CONDITION OR WITH PRIOR OVERTURN IS UNSAFE AND THE OPERATOR PROTECTION IS NO LONGER SUITABLE AND MUST BE REPLACED. ANY ALTERATIONS, MODIFICATIONS, ADD-ONS OR REPAIR WITHOUT THE WRITTEN CONSENT OF MANUFACTURE WILL VOID THE PRODUCT'S WARRANTY, LIABILITY AND CERTIFICATION.

MANUFACTURED FOR:
TimberPro, INC
1407 Industrial Dr
Shawano, WI 54166 USA

MANUFACTURED BY:
Brantz Welding
1345 Beauprey Rd
Shawano, WI 54166 USA

ROLLOVER PROTECTION STRUCTURE (ROPS) CERTIFICATION

This ROPS, when properly installed in accordance with TimberPro, INC installation instructions on a machine which is not altered to exceed the certification test weight meets, at the time of installation, criteria established by:

ISO: 8082-2:2007 - 8083:2006 - 8084:2003
WCB: G602 - G603 - G604 - G608
OR-OSHA: 437-007-0775
US-OSHA: 29CFR 1910.266

TimberPro ROPS 840146
ROPS MFG YEAR: 2018

MODELS: 600D-SERIES
700D-SERIES
800D-SERIES

MAXIMUM
MACHINE MASS:
101,616 LBS (46,092 Kg)

4 (KIT ONLY)

NOTICE PN 51720

ALWAYS REPLACE FUSE WITH THE ONE THAT IS SPECIFIED. THIS MACHINE IS EQUIPPED WITH A 24 VDC ELECTRICAL SYSTEM

6

TIMBERPRO
TimberPro Inc.
1407 Industrial Dr
Shawano WI 54166

US Pat. D523029
US Pat. Pending 11/306434
US Pat. Pending 12/741115

PN 52827

7

1 (KIT ONLY)

TIMBERPRO

5 NOTICE

FOR SAFETY, PRACTICE THE FOLLOWING SAFETY MEASURES.

GENERAL SAFETY RULES

1. To operate this piece of machinery YOU MUST BE TRAINED AND QUALIFIED.
2. Study the operator's manual and check your company's regulations and safety procedures.
3. Get to know capabilities and limitations of equipment and correct operating procedures.
4. Operate equipment only when you feel physically fit and not under the influence of alcohol or drugs.
5. Keep a serviceable first aid kit in good order on the vehicle.
6. Maintain a charged fire extinguisher on the vehicle AND KNOW HOW TO USE IT.
7. Do not remove mufflers, spark arrestors, protection guards.
8. Clean out debris from high heat areas, such as engine compartment, on at least a daily basis and always after quitting operations for the day.
9. Keep floor, steps and running boards clean and free of oil, ice, mud and loose objects.
10. Inspect equipment daily for signs of failure or beginning of failure.
11. When fueling, servicing or repairing, set booms on the ground and shut down engine.
12. Controls should not be changed without written consent from the factory.

OPERATING SAFETY MEASURES

1. Check all controls and functions for correct response before beginning work cycle with equipment.
2. Use seat belt at all times when operating the machine.
3. Operate all controls from the operator's station only.
4. Whenever leaving the operator's seat, stop the engine. Set booms on the ground so they are not supported by the hydraulics.
5. Be very careful when operating on slopes. Whenever possible, travel straight up or down to minimize possibility of rollover.
6. Be aware of people around the equipment at all times. When engine is running, maintain a safe operating distance between the equipment and other personnel and follow the approved signaling practices.
7. Use recommended protective clothing and devices such as gloves, safety boots, safety hats, goggles and ear protection when necessary.
8. Carry no passengers.

PN# 16062



8 (KIT ONLY)

WARNING

CALIFORNIA - Proposition 65 Warning
Diesel engine exhaust and some of its constituents are known to the State of California to cause cancer, birth defects, and other reproductive harm.

PN# 10137

11



9 (KIT ONLY)

MADE IN U.S.A.

WARNING

Do not store tools or heavy items in this compartment.

10 (KIT ONLY)

UPPER TURNTABLE - NV & LV
UPPER TURNTABLE CAB DECALS

KIT DECALS (REF. 1-10)

REF	PART #	QTY		DESCRIPTION	SEE SECTION
-	55493EN-UP	1	❑	KIT, DECAL - “D” SERIES Outside (ENGLISH)	
	55493BR-UP	1	❑	KIT, DECAL - “D” SERIES Outside (BRAZILIAN PORTUGUESE)	
	55493FR-UP	1	❑	KIT, DECAL - “D” SERIES Outside (FRENCH)	
	55493SP-UP	1	❑	KIT, DECAL - “D” SERIES Outside (SPANISH)	
	55493SW-UP	1	❑	KIT, DECAL - “D” SERIES Outside (SWEEDISH)	

NOTE:
- Individual replaceable decals from Kit#55493 are listed below.
- Replaceable decals listed below are available in the languages listed above. To order an individual decal in a specific language use the two digit language extension from above.
  - ie: 52827**FR**

KIT 55493 DECALS THAT CAN ORDERED INDIVIDUALLY

REF	PART #	QTY		DESCRIPTION	SEE SECTION
-	55493-UP	NA	❑	KIT, DECAL - “D” SERIES Outside	
2	18066	1		DECAL, TAPERED HUB TORQUE	
5	16062	1		DECAL, CAB OPS INSTRUCTION	
6	21570	1		BREATHER, SWING GEARBOX - LOHMANN	
7	52827	1		DECAL, Patent Pend Logo	
11	18337	1		DECAL, CALIFORNIA DIESEL EXHAUST WARNING	

UPPER TURNTABLE - NV & LV

UPPER TURNTABLE WARNING, INFO, & CAUTION DECALS

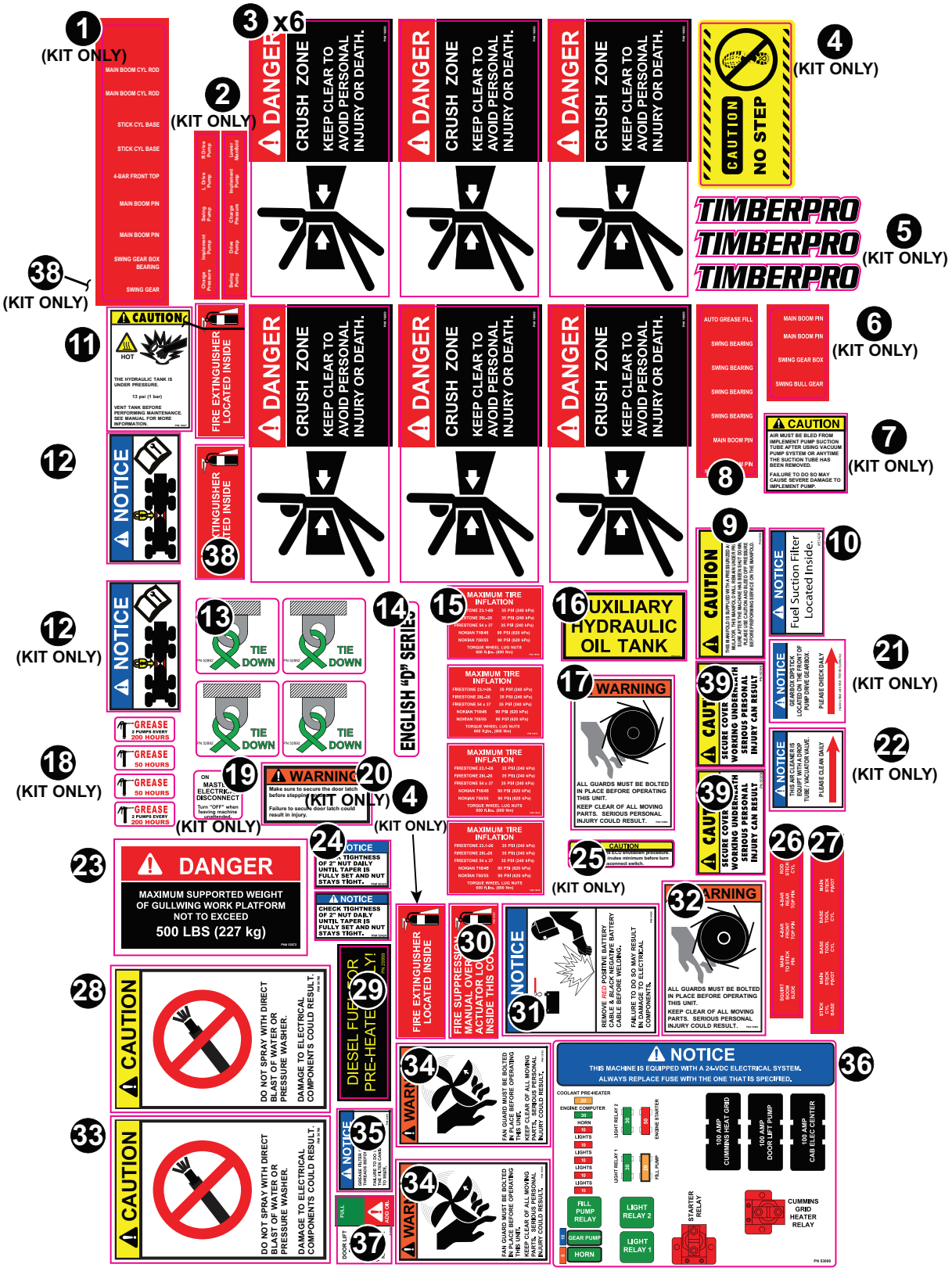

UPPER TURNTABLE - NV & LV
UPPER TURNTABLE WARNING, INFO, & CAUTION DECALS

KIT DECALS (REF. 1-39)

REF	PART #	QTY		DESCRIPTION	SEE SECTION
-	57909EN-UP	1	❑	KIT, DECAL - “D” SERIES Outside (ENGLISH)	
-	57909FR-UP	1	❑	KIT, DECAL - “D” SERIES Outside (FRENCH)	
-	57909SP-UP	1	❑	KIT, DECAL - “D” SERIES Outside (SPANISH)	
-	57909GR-UP	1	❑	KIT, DECAL - “D” SERIES Outside (GERMAN)	
-	57909BR-UP	1	❑	KIT, DECAL - “D” SERIES Outside (Brazilian Portuguese)	

KIT 57909 DECALS THAT CAN ORDERED INDIVIDUALLY

REF	PART #	QTY		DESCRIPTION	SEE SECTION
3	16060-UP	1		DECAL, DANGER CRUSH ZONE	
8	57952-UP	1		DECAL, GREASE POINTS - 755 Upper	
9	53956-UP	1		DECAL, lower man acc warning	
10	51424-UP	1		DECAL, Fuel Filter Location Inside	
11	16607-UP	1		DECAL, PRESSURIZED HYD. TANK	
13	52892-UP	1		DECAL, TIE DOWN	
15	19678-UP	1		DECAL, TIRE PRESSURE	
16	53231-UP	1		DECAL, Aux Hyd Oil Tank	
17	53869-UP	1		DECAL, MOVING PARTS WARNING	
23	52672-UP	1		DECAL, GULLWING SUPPORT WEIGHT WARNING	
24	50424-UP	1		DECAL, TORQUE 2” NUT NOTICE	
26	52715-UP	1		DECAL, GREASE POINTS - squirt 630/830	
27	52716-UP	1		DECAL, GREASE POINTS - feller stick 630	
28	54766-UP	1		DECAL, Pressure Washing Warning	
29	25959-UP	1		DECAL, DIESEL FUEL ONLY	
30	51927-UP	1		DECAL, Fire Surpression actuator inside	
31	24286-UP	1		DECAL, WELDING NOTICE - 300HP	
32	53869-UP	1		DECAL, MOVING PARTS WARNING	
33	54766-UP	1		DECAL, Pressure Washing Warning	
34	19765-UP	2		DECAL, KEEP CLEAR OF MOVING PARTS	
35	23451-UP	1		DECAL, GREASE FILTER CANISTER	
36	53008-UP	1		DECAL, engine electrical center MDL	
37	51902-UP	1		DECAL, Door Lift Pump Oil	
39	50359-UP	1		DECAL, SECURE COVER CAUTION	

❑ Kit or assembly. Includes all items indented underneath.

UPPER TURNTABLE - NV & LV
LOWER CARBODY DECALS

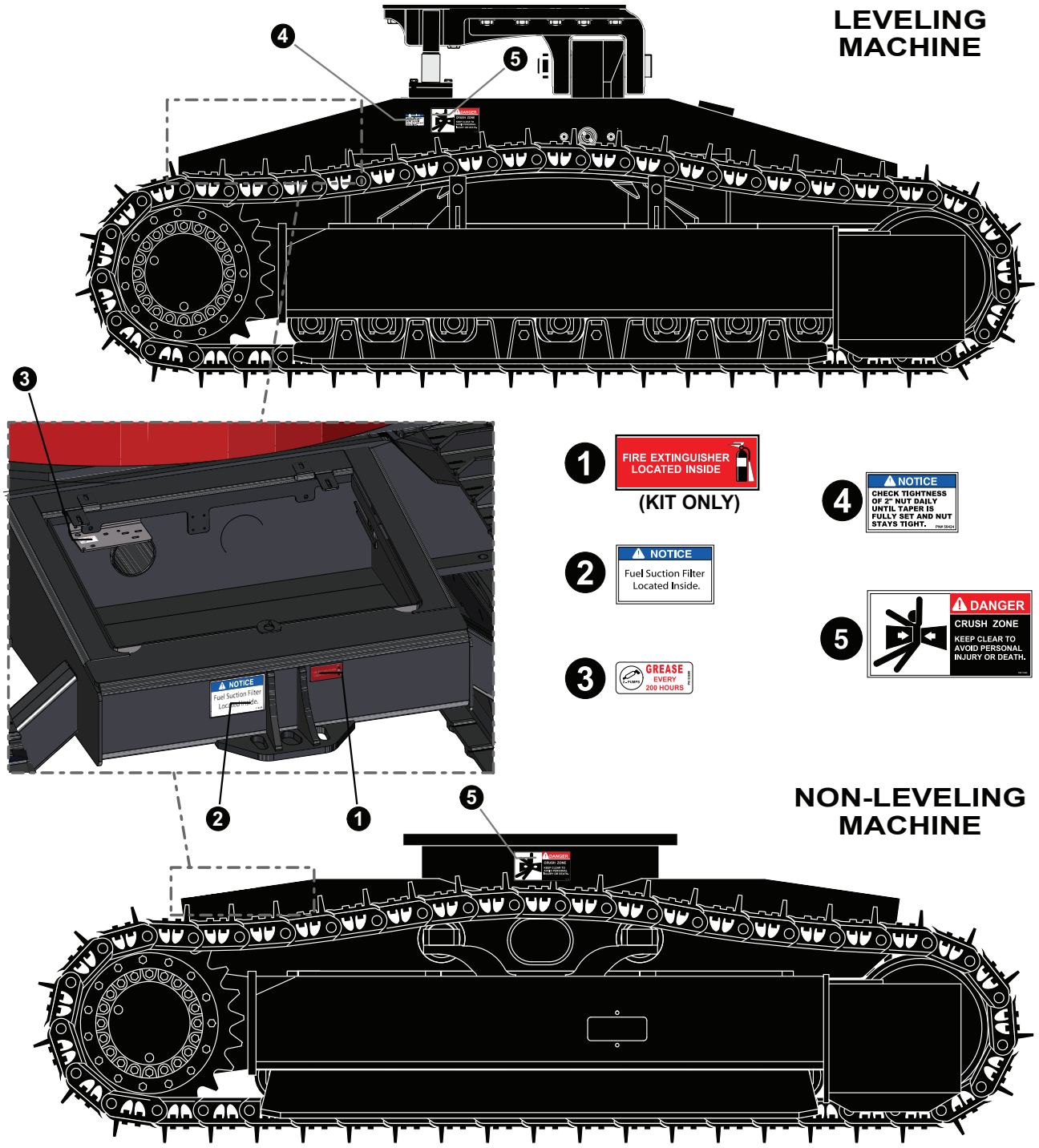

1 FIRE EXTINGUISHER LOCATED INSIDE
(KIT ONLY)

2 NOTICE
Fuel Suction Filter Located Inside.

3 GREASE EVERY 200 HOURS

4 NOTICE
CHECK TIGHTNESS OF 2" NUT DAILY UNTIL TAPER IS FULLY SET AND NUT STAYS TIGHT.

5 DANGER
CRUSH ZONE
KEEP CLEAR TO AVOID PERSONAL INJURY OR DEATH.

REF	PART #	QTY	DESCRIPTION	SEE SECTION
1	57909-UP	1	DECAL, Fire Extinguisher Inside (KIT ONLY)	See previous page for kit
2	51424-UP	1	DECAL, Fuel Suction Filter location	
3	53690-UP	1	DECAL, 200 Hour Grease Notice	
4	50424-UP	2	DECAL, TORQUE 2" NUT NOTICE	
5	16060-UP	4	DECAL, DANGER CRUSH ZONE	

PAGE INTENTIONALLY LEFT BLANK

SECTION EE-1
CUMMINS L9 STAGE V ENGINE (365 HP) AND CUMMINS QSL9 / TPEM EXPORT ENGINE (325 HP) PARTS AND INSTALLATION

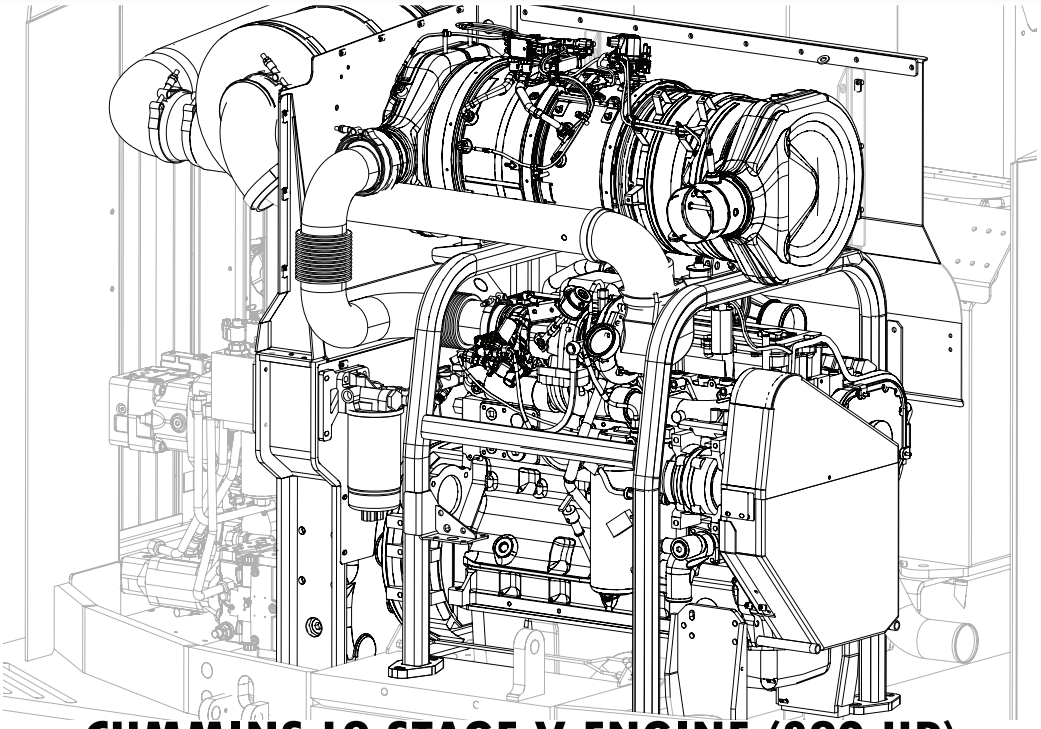

CUMMINS L9 STAGE V ENGINE (390 HP)

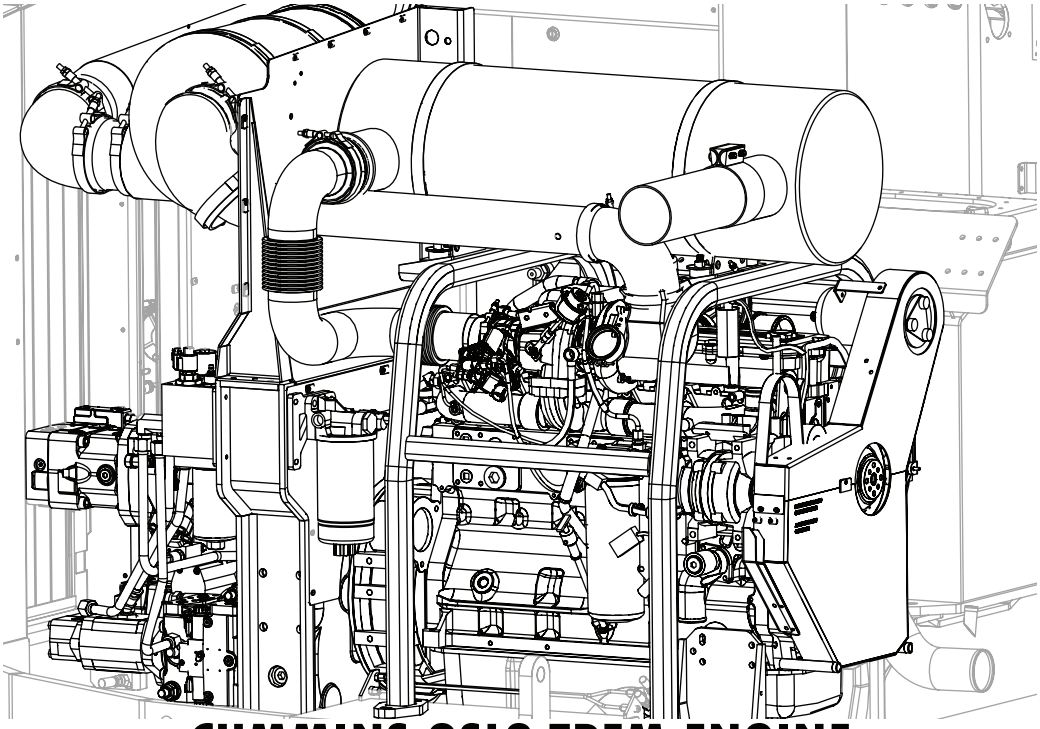

CUMMINS QSL9 TPEM ENGINE

ENGINE PARTS AND INSTALLATION
CUMMINS ENGINE INSTALLATION - STANDARD ALL PACKAGES

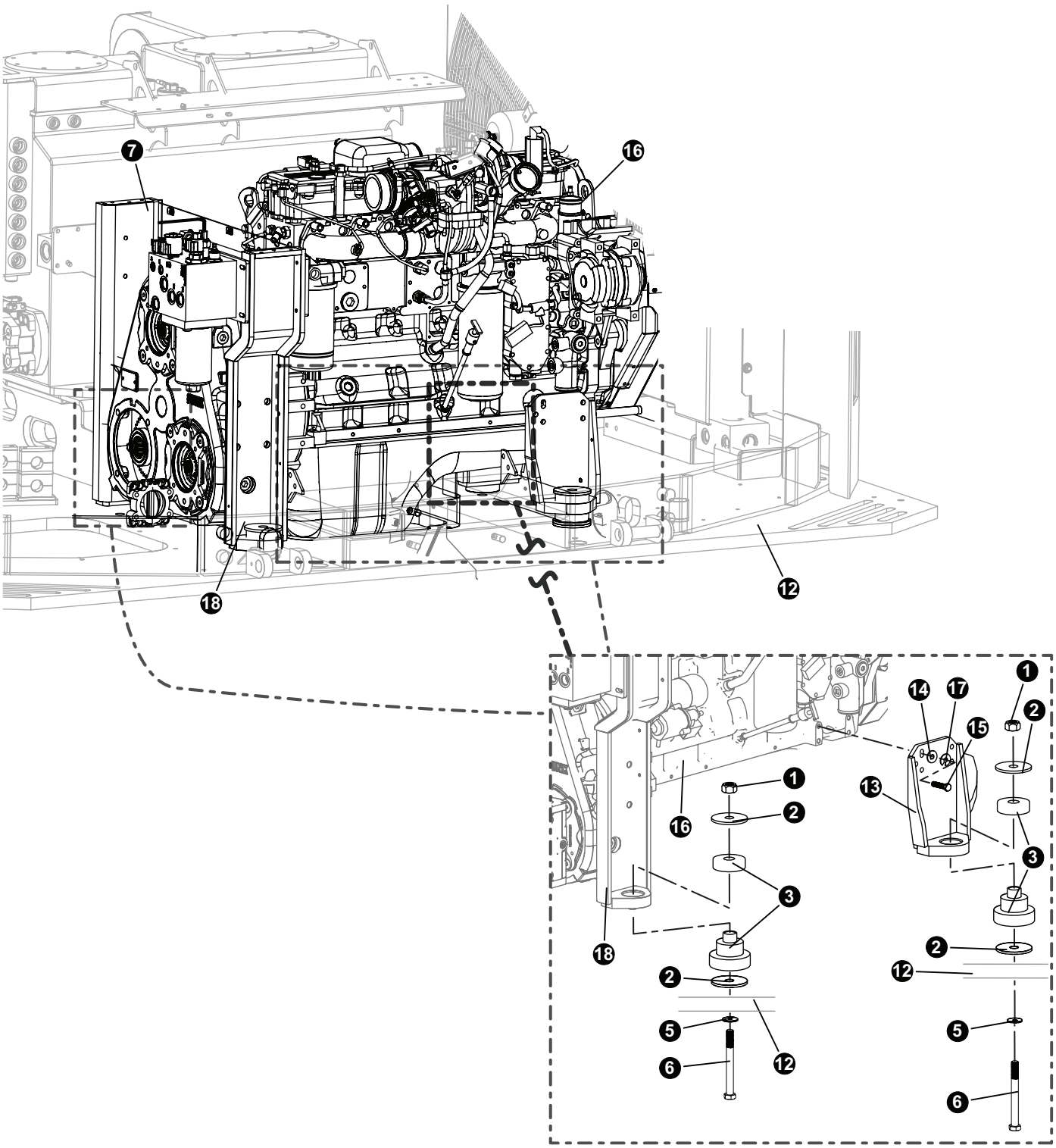

NOTE: See next page for Item #7 and #18.

Rear mounts shown, forward mounts are same except Item #7.

ENGINE PARTS AND INSTALLATION
CUMMINS ENGINE INSTALLATION - STANDARD ALL PACKAGES

COMMON COMPONENTS

REF	PART #	QTY	DESCRIPTION	SEE SECTION
1	50334	4	NUT, LOCK .875”	
2	60268	8	WASHER, ENGINE MOUNT D-MOD	
3	60270	4	ISOLATOR, ENGINE MOUNT - D SERIES	
5	10718	4	WASHER, SAE FLAT - .875”	
6	21540	4	BOLT - .875” X 6”	
7	(See Next Page)	1	MOUNT, ENGINE - REAR (D MODEL)	(See Next Page)
12	(Click Here)	1	WELDMENT, TAILSWING D - UPPER BASE	UP-1
13	60269	2	MOUNT, ENGINE - FRONT (D MODEL)	
14	18735	8	WASHER, FLAT - 12MM	
15	15551	4	BOLT - 12mm-1.75P x 40mm	
17	53760	2	1/2” LOCKWASHER KNURLED	
18	(See Next Page)	1	MOUNT, ENGINE - REAR (D MODEL)	(See Next Page)

OPTIONAL ENGINE PACKAGES

REF	PART #	QTY	DESCRIPTION	SEE SECTION
16	57574-EXPORT	1	ENGINE, CUMMINS QSL9 - TPEM (325 HP)	
16	58070	1	ENGINE, CUMMINS L9 -STAGE V 390 HP TAIL	

❑ Kit or Assembly - includes all items indented underneath.

NOTE:

- Parts listed are consistent for CUMMINS L9 - STAGE V (365 HP) engine / CUMMINS QSL9 - TPEM (325 HP) Engine unless otherwise noted.
- See next page for Item #7 and #18.

ENGINE PARTS AND INSTALLATION
TRIPLE DRIVE BULKHEAD PANELS - STANDARD ALL PACKAGES

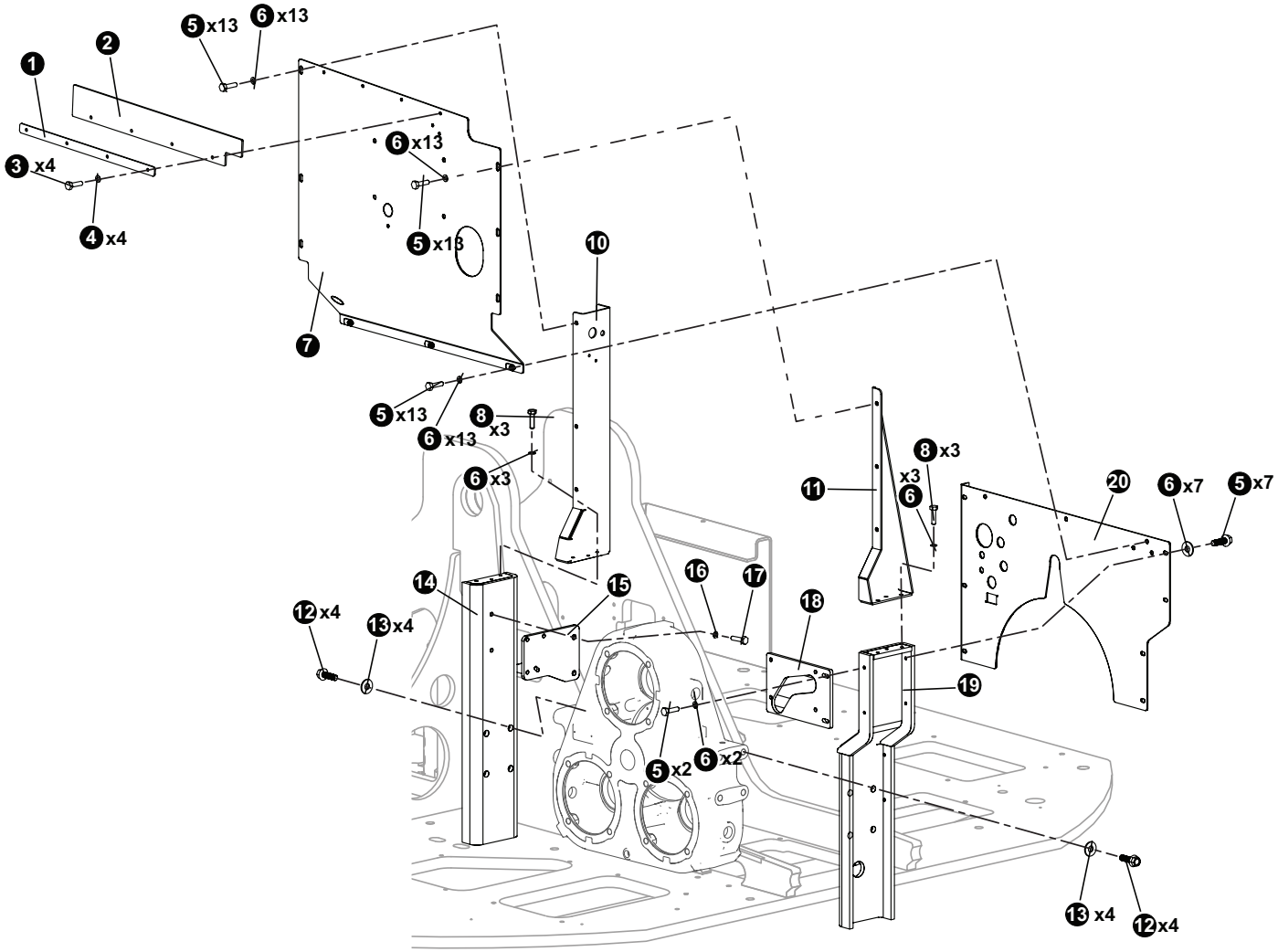

ENGINE PARTS AND INSTALLATION
TRIPLE DRIVE BULKHEAD PANELS - STANDARD ALL PACKAGES

REF	PART #	QTY	DESCRIPTION	SEE SECTION
1	47205	1	BAR, BARRIER PANEL - ENGINE	
2	47206	1	RUBBER, ENGINE BARRIER PANEL	
3	15576	4	BOLT - .25” X 1”	
4	10757	4	1/4” WASHER	
5	15542	18	BOLT - .375” X .75”	
6	15528	20	WASHER, SAE FLAT - .375”	
7	60528	1	BARRIER PANEL, UPPER ENGINE - D SERIES	
8	11707	6	BOLT - .375” X 1”	
10	60392	1	PLATE, UPPER G-BOX 2 - D SERIES	
11	60389	1	WELDMENT, G-BOX UPPER - D SERIES	
12	15526	8	BOLT - .625” X 2”	
13	10771	8	WASHER, SAE FLAT - .625”	
14	60570	1	WELDMENT, ENGINE MT INNER REAR D-MODEL	
15	60444	1	MOUNT, MANIFOLD	
16	10805	2	WASHER, SAE FLAT - .5”	
17	50100	2	BOLT - .5” X 1.25”	
18	60391	1	PLATE, CHARGE BLOCK MOUNT - D	
19	60295	1	MOUNT, ENGINE - REAR (D MODEL)	
20	60396	1	WELDMENT, LOWER ENG BARRIER PANEL	

❑ Kit or Assembly - includes all items indented underneath.

NOTE:
Parts listed are consistent for CUMMINS L9 - STAGE V (365 HP) engine / CUMMINS QSL9 - TPEM (325 HP) Engine unless otherwise noted.

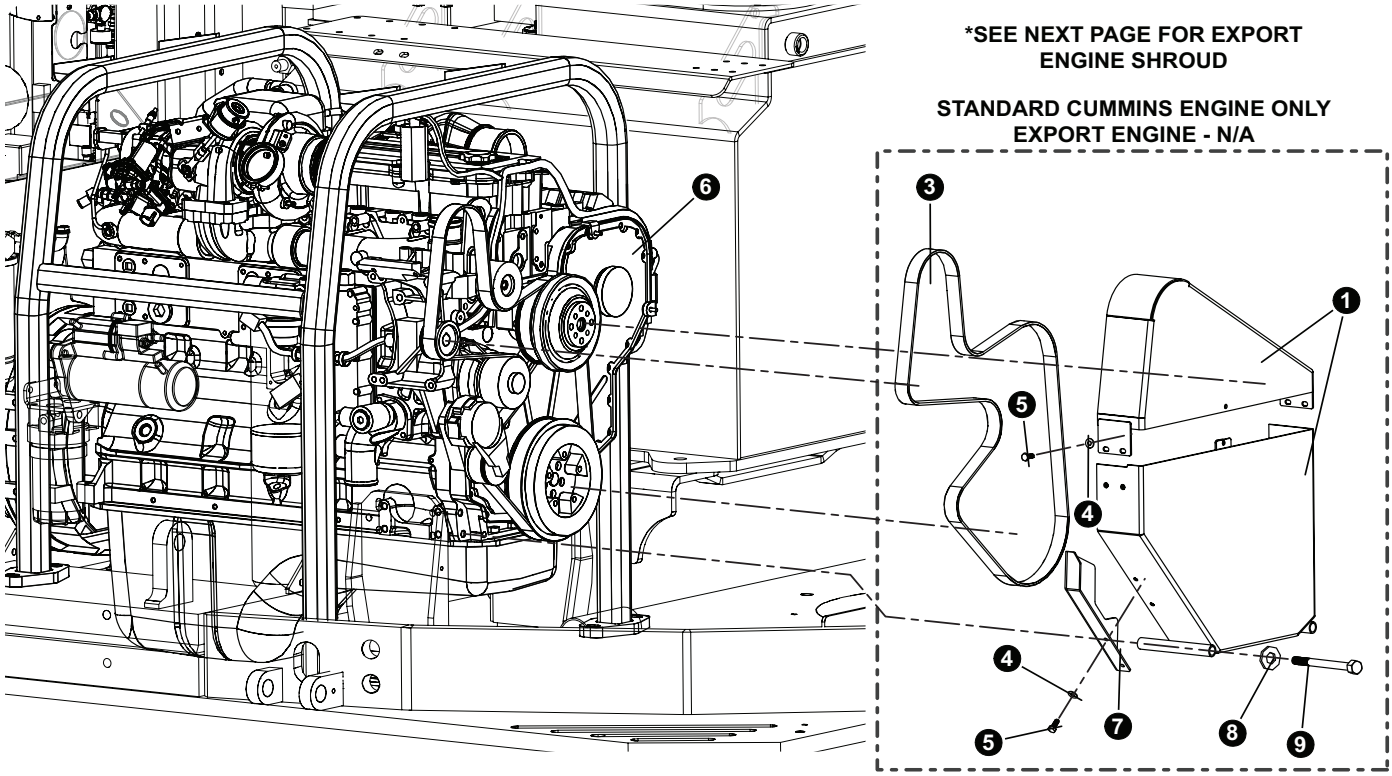
*SEE NEXT PAGE FOR EXPORT ENGINE SHROUD
STANDARD CUMMINS ENGINE ONLY
EXPORT ENGINE - N/A
6
3
1
5
4
4
5
7
8
9

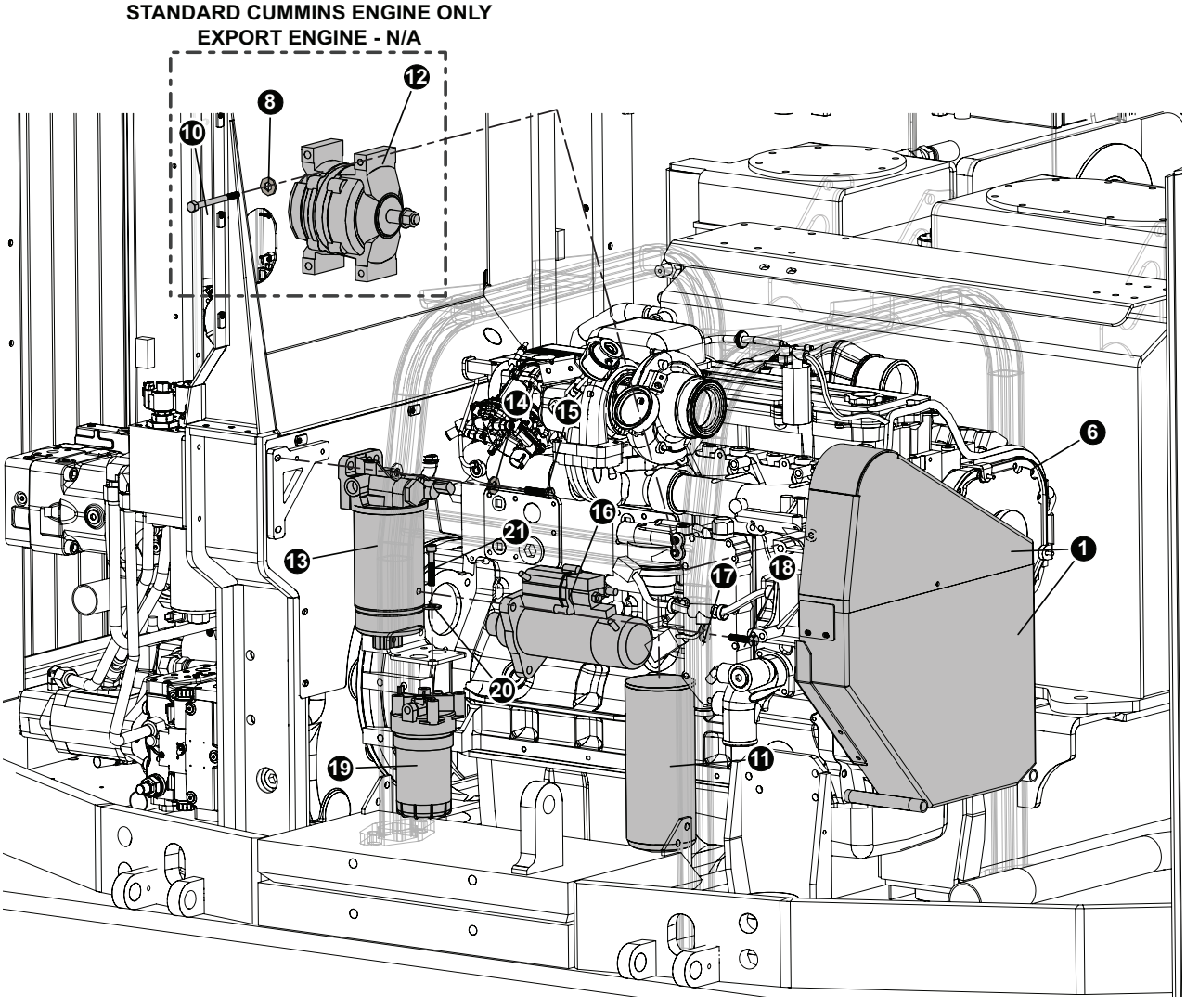
STANDARD CUMMINS ENGINE ONLY
EXPORT ENGINE - N/A
12
8
10
14
15
6
16
21
1
13
17
18
20
11
19

ENGINE PARTS AND INSTALLATION
CUMMINS L-9 STAGE V ENGINE COMPONENTS ONLY

REF	PART #	QTY	DESCRIPTION	SEE SECTION
1	48950	1	SHROUD, ENGINE BELT	
3	(See Description)	1	BELT, FAN - ENGINE (D-SERIES) (Supplier Part #: 3289864)	
4	10757	7	1/4” FLAT WASHER	
5	15604	7	BOLT - .25” X .75”	
6	(Click Here)	1	ENGINE, CUMMINS	EE-1
7	46288	1	SHROUD, FAN - BOTTOM	
8	18735	6	12mm Washer	
9	53110	2	BOLT - 12MM X 150MM FAN GUARD	
10	15556	4	BOLT - 12MM-1.75P X 20MM	
11	58084	1	OIL FILTER	
12	3686047 (Sup. #)	1	ALTERNATOR, CUMMINS	
13	58082	1	FUEL PRO FILTER - STAGE 1	
14	15528	2	WASHER, SAE FLAT - .375”	
15	10402	1	BOLT - .375” X 1.25”	
16	5367768 (Sup. #)	1	STARTER, CUMMINS	
18	24604	1	BOLT - 10MM-1.5P X 125MM (FLANGE HEAD)	
19	58083	1	FILTER, FUEL - STAGE 2	
20	10801	4	5/16” FLAT WASHER	
21	25059	2	BOLT - 8MM-1.25P X 20MM	

📖 See referenced page for component or assembly breakdown.

NOTE:
Parts listed are consistent for CUMMINS L9 - STAGE V (365 HP) engine / CUMMINS QSL9 - TPEM (325 HP) Engine unless otherwise noted.

ENGINE PARTS AND INSTALLATION
CUMMINS QSL9 TPEM EXPORT ENGINE COMPONENTS ONLY

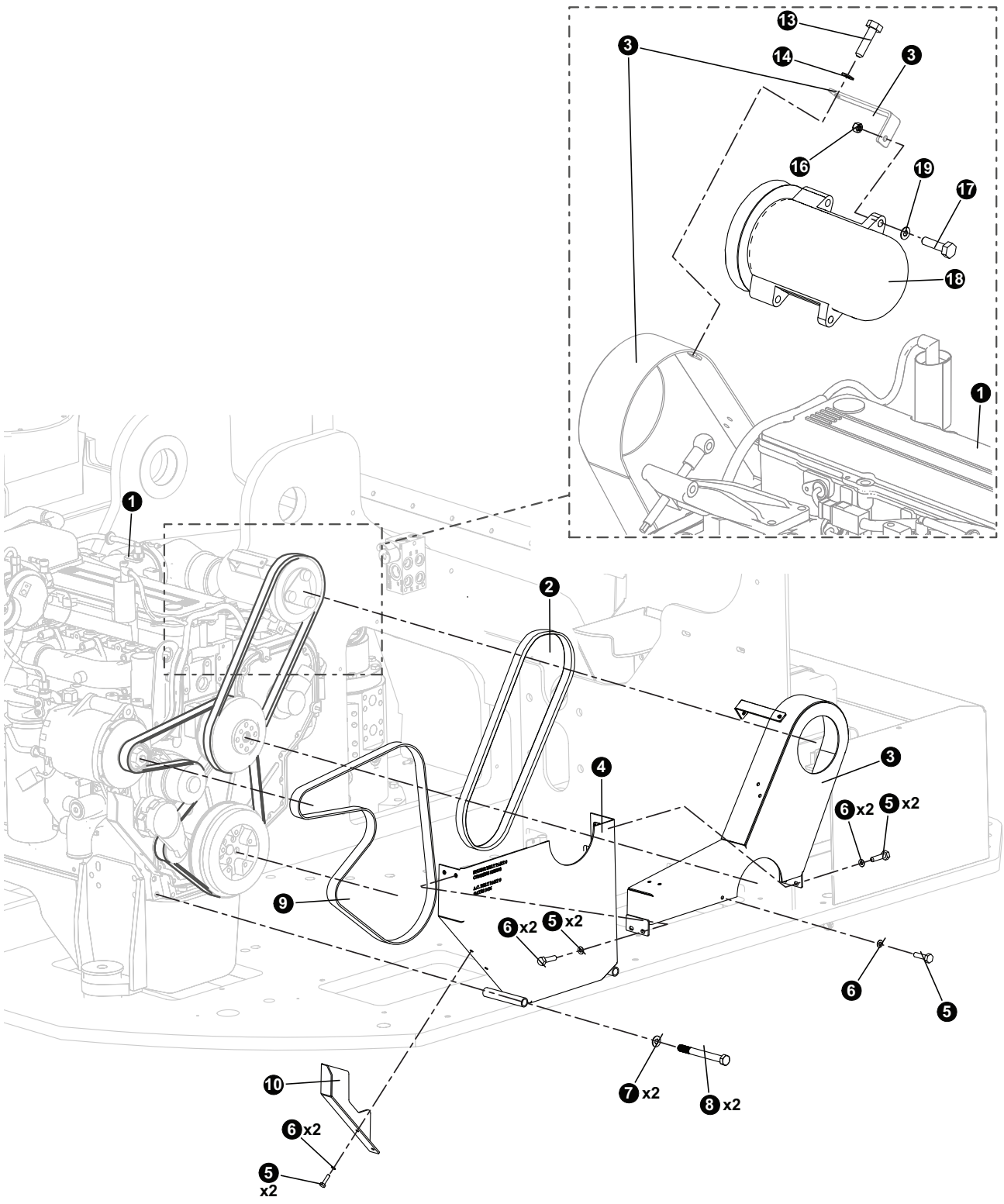

ENGINE PARTS AND INSTALLATION
CUMMINS QSL9 TPEM EXPORT ENGINE COMPONENTS ONLY

REF	PART #	QTY	DESCRIPTION	SEE SECTION
1	(Click Here)	1	ENGINE, CUMMINS	EE-1
2	55584	1	BELT, A/C COMPRESSOR - C - D SERIES - CU	
	46268	1	SHROUD, ASSY BELT GUARD 300HP & D-MOD	
3	46272	1	SHROUD, ENGINE BELT TOP	
4	46275	1	SHROUD, ENGINE BELT LOWER 300HP & D-MOD	
5	15604	7	BOLT - .25” X .75”	
6	10757	7	1/4” FLAT WASHER	
7	18735 (Mfgr. #)	1	12mm Washer	
8	53110	4	BOLT - 12MM X 150MM FAN GUARD (830-B)	
9	58055	1	BELT, FAN - ENGINE (D-SERIES)	
10	46288	1	SHROUD, FAN - BOTTOM	
13	15604	1	BOLT - .25” X .75”	
14	10757	1	WASHER, .25 FLAT	
16	10812	1	5/16” NUT	
17	10822	1	BOLT - .3125” X 1.25”	
18	55135	1	COMPRESSOR, A/C - C MODEL / SKIDDER	

NOTE:
Parts listed are consistent for CUMMINS QSL9 - TPEM (325 HP) Engine ONLY.

📖 See referenced page for component or assembly breakdown.

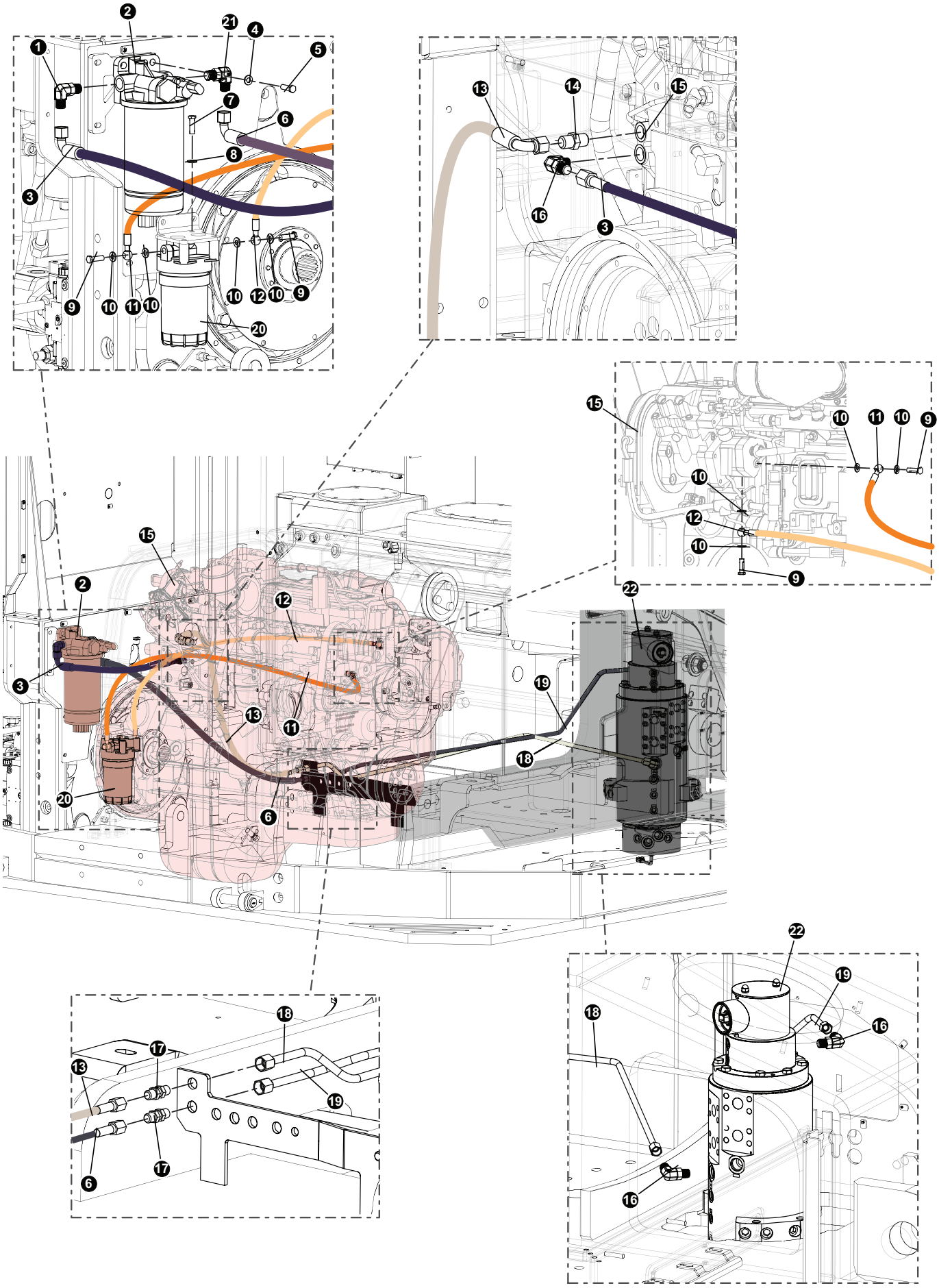
1
2
21
4
5
7
6
8
3
9
10
11
10
10
12
10
9
20
13
14
15
16
3
15
10
11
10
9
10
12
10
9
22
15
2
12
3
19
13
11
18
20
6
22
19
18
16
16
18
17
13
19
17
6

ENGINE PARTS AND INSTALLATION
CUMMINS L-9 STAGE V ENGINE FUEL LINES ONLY

REF	PART #	QTY	DESCRIPTION	SEE SECTION
1	55347	1	FITTING, ELBOW - BULKHEAD 6 WETX-WLN-S	
2	58052	1	FUEL PRO FILTER - STAGE 1	
3	(See Description)	1	HOSE ASSEMBLY - **221FR25-06-06JS-06J9**	
4	15528	2	WASHER, SAE FLAT - .375”	
5	10402	2	BOLT - .375” X 1.25”	
6	(See Description)	1	HOSE ASSEMBLY - **221FR64-06-06JS-06J9**	
7	25059	2	BOLT - 8MM-1.25P X 20MM	
8	10801	2	WASHER, 5/16”	
9	FASTENER	4	(CONTACT YOUR CUMMINS DEALER FOR REPLACEMENT PART)	
10	WASHER	8	(CONTACT YOUR CUMMINS DEALER FOR REPLACEMENT PART)	
11	HOSE	1	(CONTACT YOUR CUMMINS DEALER FOR REPLACEMENT PART)	
12	HOSE	1	(CONTACT YOUR CUMMINS DEALER FOR REPLACEMENT PART)	
13	(See Description)	1	HOSE ASSEMBLY - **221FR39-06-06JS-06J9**	
14	53103	3	FITTING, 6-8 - ORB-JIC	
15	(Click Here)	1	ENGINE - CUMMINS.	EE-1
16	53103	1	FITTING, 6-8- ORB-JIC 830-B	
17	55385	2	FITTING, BULKHEAD- 8 WTX-WLN-S	
18	57274	1	TUBELINE, RM FS TO FUEL SUPPLY BULKHEAD	
19	57273	1	TUBELINE, RM FR TO FUEL RETURN BULKHEAD	
20	58053	1	FILTER, FUEL - STAGE 2	
21	53073	1	ELBOW, 90 6-JIC X 10-ORB	
22	(Click Here)	1	ROTARY MANIFOLD	UP-1

📖 See referenced page for component or assembly breakdown.

NOTE:
Parts listed are consistent for CUMMINS L9 - STAGE V (365 HP) engine ONLY.

ENGINE PARTS AND INSTALLATION
CUMMINS QSL9 TPEM EXPORT ENGINE FUEL LINES ONLY

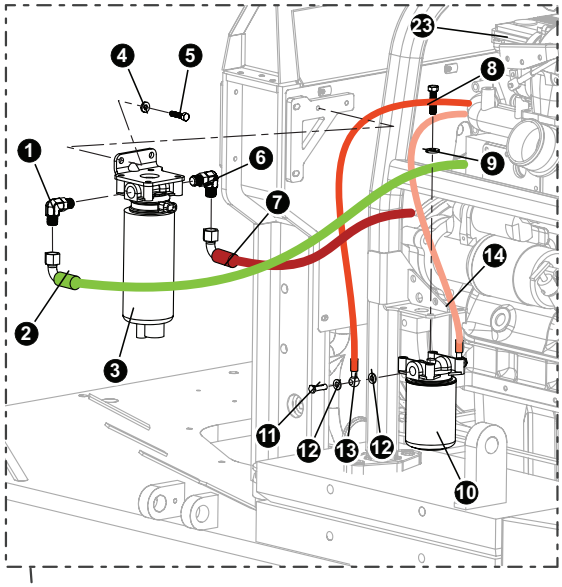

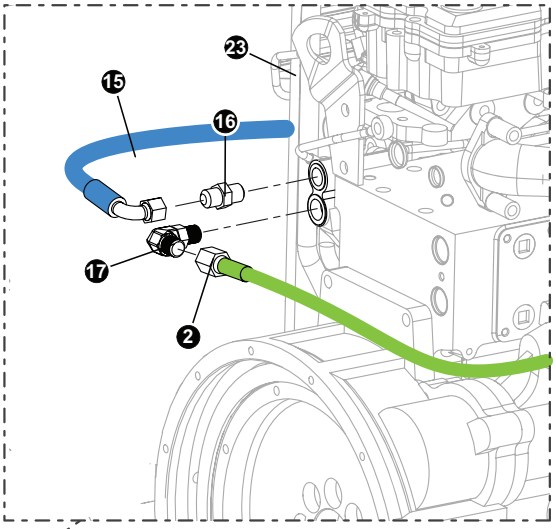

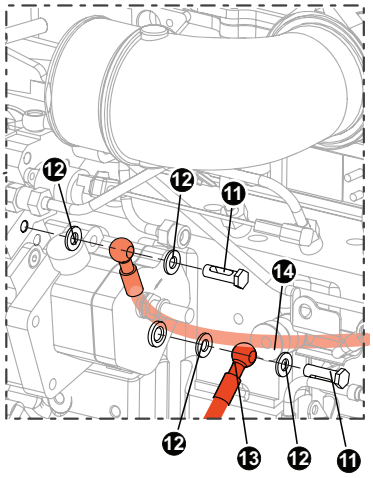

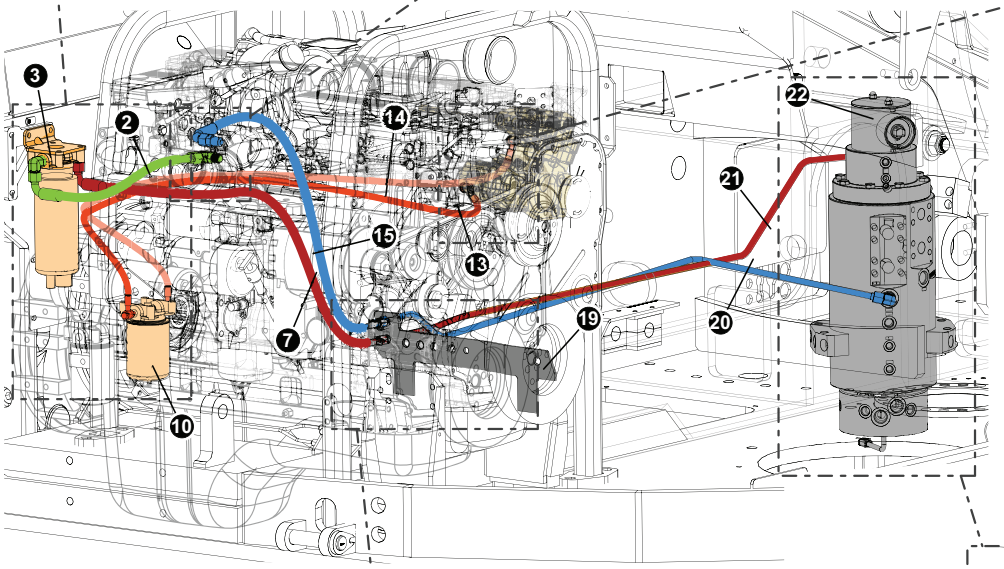

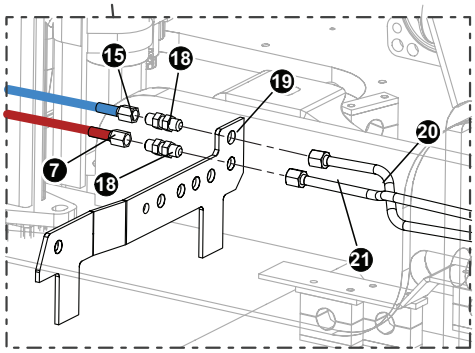

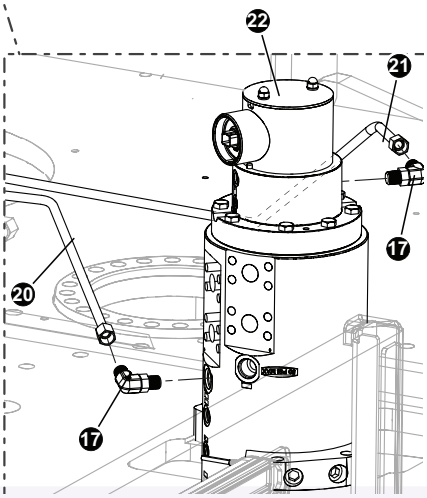

ENGINE PARTS AND INSTALLATION
CUMMINS QSL9 TPEM EXPORT ENGINE FUEL LINES ONLY

REF	PART #	QTY	DESCRIPTION	SEE SECTION
1	55347	2	FITTING, ELBOW - BULKHEAD 6 WETX-WLN-S	
2	(See Description)	1	HOSE ASSEMBLY - **221FR25-06-06JS-06J9**	
3	(See Description)	1	FUEL FILTER **(Supplier Part #FS9357)**	
4	15528	2	WASHER, SAE FLAT - .375”	
5	10402	2	BOLT - .375” X 1.25”	
6	53073	1	ELBOW, 90 6-JIC X 10-ORB	
7	(See Description)	1	HOSE ASSEMBLY - **221FR64-06-06JS-06J9**	
8	25059	2	BOLT - 8MM-1.25P X 20MM	
9	10801	2	WASHER, 5/16”	
10	(See Description)	1	FILTER, FUEL **(Supplier Part #WF9077)**	
11	FASTENER	4	(CONTACT YOUR CUMMINS DEALER FOR REPLACEMENT PART)	
12	WASHER	8	(CONTACT YOUR CUMMINS DEALER FOR REPLACEMENT PART)	
13	HOSE	1	(CONTACT YOUR CUMMINS DEALER FOR REPLACEMENT PART)	
14	HOSE	1	(CONTACT YOUR CUMMINS DEALER FOR REPLACEMENT PART)	
15	(See Description)	1	HOSE ASSEMBLY - **221FR39-06-06JS-06J9**	
16	53103	3	FITTING, 6-8 - ORB-JIC	
17	20031	3	ELBOW, 90 - 6-8 C5OLO-S	
18	55385	2	FITTING, BULKHEAD - 8 WTX-WLN-S	
19	(Click Here)	1	WELDMENT, TAILSWING D - UPPER BASE	UP-1
20	57274	1	TUBELINE, RM FS TO FUEL SUPPLY BULKHEAD	
21	57273	1	TUBELINE, RM FR TO FUEL RETURN BULKHEAD	
22	(Click Here)	1	ROTARY MANIFOLD	UP-1
23	(Click Here)	1	ENGINE - CUMMINS.	EE-1

📖 See referenced page for component or assembly breakdown.

NOTE:
Parts listed are consistent for CUMMINS QSL9 - TPEM (325 HP) Export Engine ONLY.

ENGINE PARTS AND INSTALLATION

AIR CLEANER AND AIR INTAKE TUBE INSTALLATION - STANDARD ALL PACKAGES

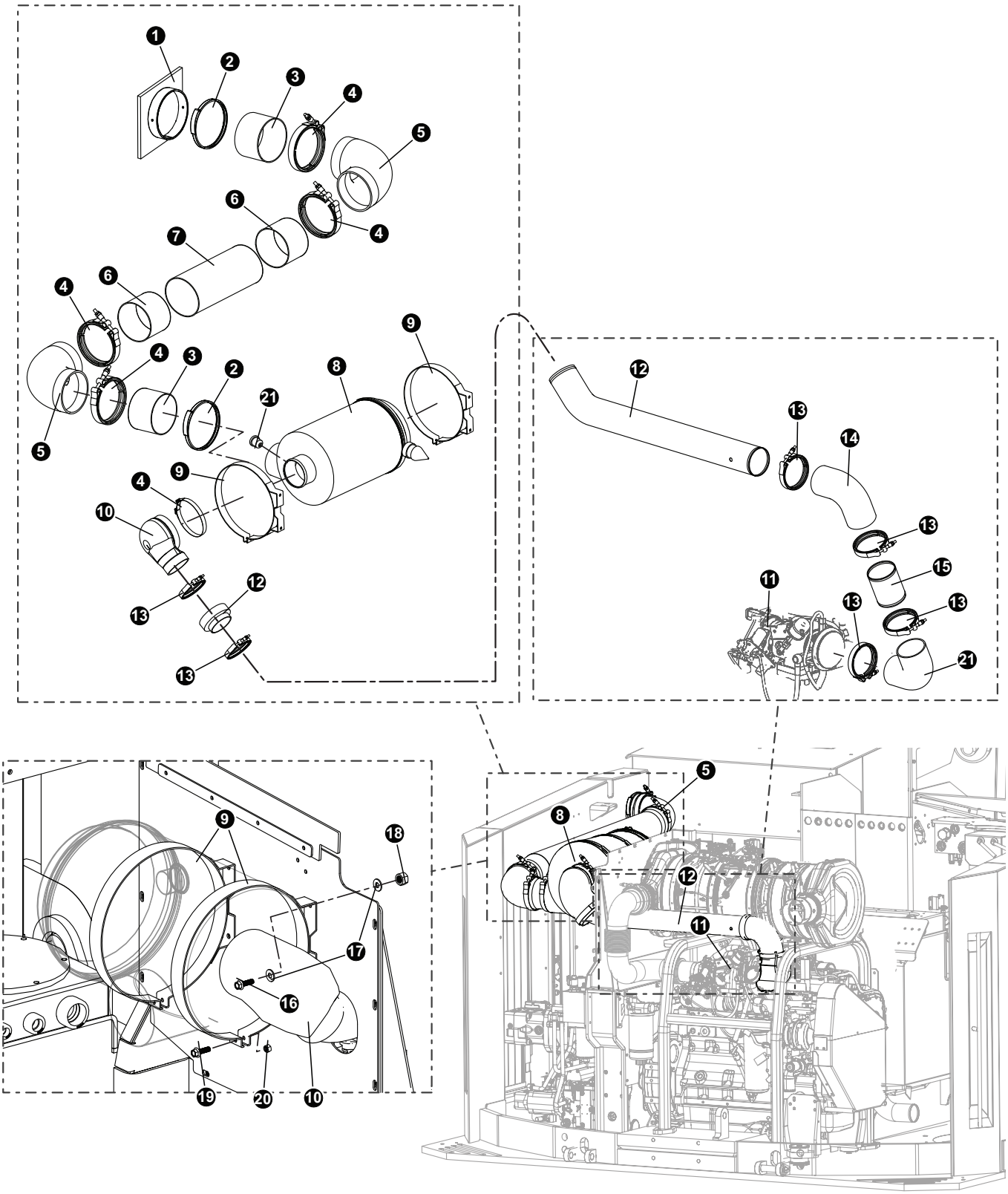

ENGINE PARTS AND INSTALLATION
AIR CLEANER AND AIR INTAKE TUBE INSTALLATION - STANDARD ALL PACKAGES

REF	PART #	QTY	DESCRIPTION	SEE SECTION
1	46868	1	WELDMENT, AIR INTAKE FLANGE C/D/765	
2	55498	1	CLAMP, AIR INLET	
3	55499	1	TUBE, AIR INLET - TIER 4	
4	16249	5	CLAMP, STRAP BAND - 5.5”	
5	57495	2	ELBOW, RUBBER - 90 DEGREE 6” X 6”	
6	60548	2	TUBE, 6” - AIR INTAKE	
7	55273	1	TRIM, PLENUM - C SERIES CAB	
8	58136	1	AIR CLEANER ASSEMBLY - 775	
9	58260	2	BAND, AIR CLEANER CLAMP, 775	
10	58279	1	ADAPTOR, RUBBER ELBOW - 4” TO 5”	
11	(Click Here)	1	ENGINE, CUMMINS	EE-1
12	60445	1	WELDMENT, AIR INTAKE TUBE	
13	15697	4	CLAMP, STRAP BAND - 4.5”	
14	55634	1	ELBOW, RUBBER - 4” x 4” - CUMMINS	
15	60525	1	TUBE, BREATHER TO TURBO - 4”OD X 3”L.	
16	11707	4	BOLT - .375” X 1”	
17	10802	8	3/8” WASHER	
18	10813	4	NUT, LOCK - .375”	
19	10822	2	BOLT - .3125” X 1.25”	
20	10812	2	5/16” LOCKNUT	
21	58252	1	ELBOW, RUBBER 90 COBRA 4X4 765 D	

📖 See referenced page for component or assembly breakdown.

NOTE:
Parts listed are consistent for CUMMINS L9 - STAGE V (365 HP) engine / CUMMINS QSL9 - TPEM (325 HP) Engine unless otherwise noted.

ENGINE PARTS AND INSTALLATION

CUMMINS L-9 STAGE V ENGINE MUFFLER AND MUFFLER MOUNT INSTALLATION ONLY

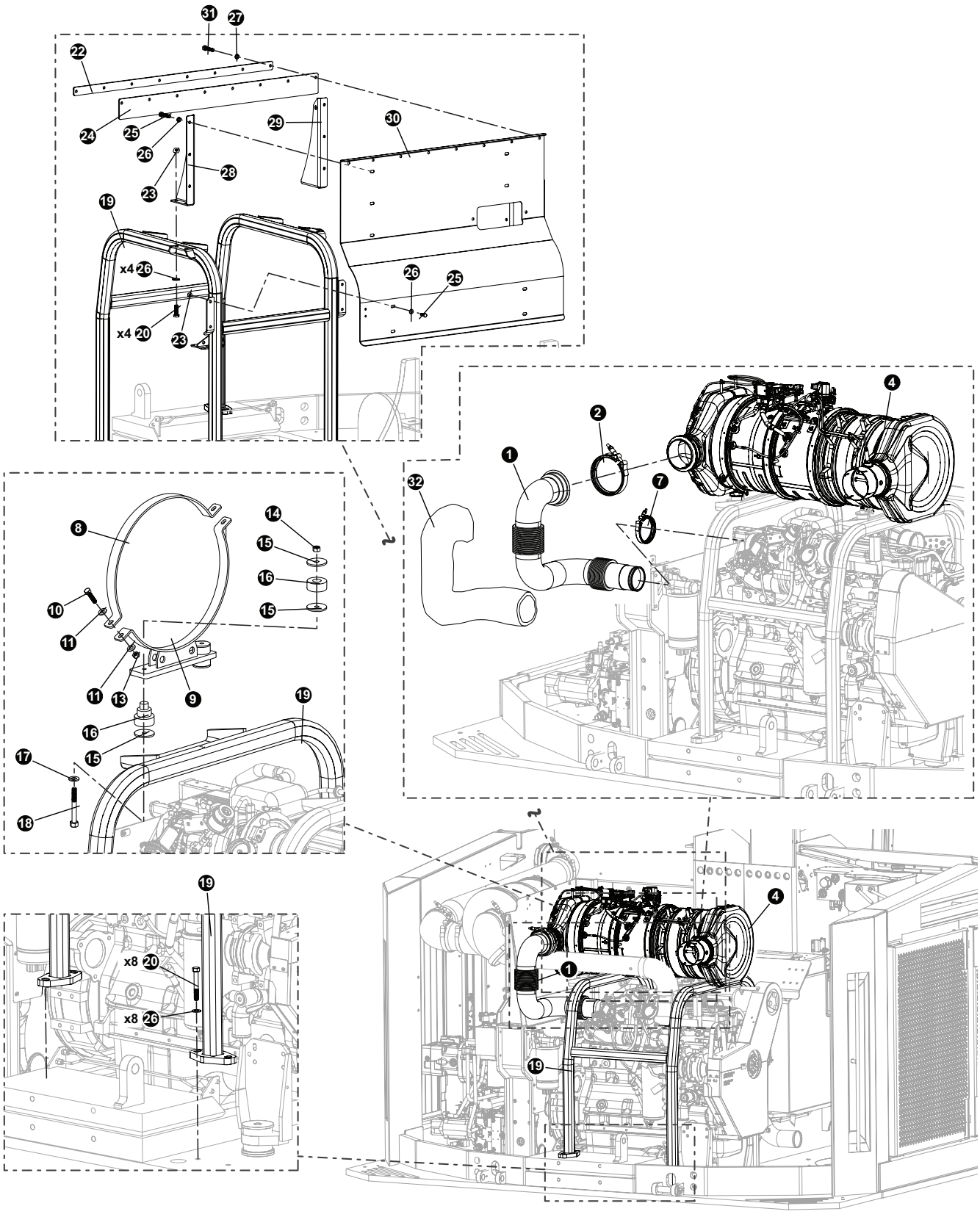

ENGINE PARTS AND INSTALLATION

CUMMINS L-9 STAGE V ENGINE MUFFLER AND MUFFLER MOUNT INSTALLATION ONLY

REF	PART #	QTY	DESCRIPTION	SEE SECTION
1	62201	1	PIPE, EXHAUST - TAIL SWING STAGE 5	
2	16249	1	CLAMP, STRAP BAND - 5.5”	
4	(No Replacement Part)	1	MUFFLER, STAGE V ENGINE - CUMMINS	
7	20452	1	CLAMP, TURBO EXHAUST - C8.3 ELITE	
8	60381	2	STRAP, SINGLE CAN MOUNT - AFTER TREATMENT	
9	60380	2	WELDMENT, SCR MTG CLAMP - D SERIES	
10	10822	4	BOLT - .3125” X 1.25”	
11	10801	8	5/16” WASHER	
13	10812	4	5/16-18 LOCKNUT	
14	10815	4	1/2” LOCKNUT	
15	46674	12	WASHER, FENDER - ISOLATOR	
16	55560	4	ISOLATOR, RUBBER - VOLVO MUFFLER - T4F	
17	10804	4	1/2” FLAT WASHER	
18	10893	4	BOLT - .5” X 3”	
19	48910	1	WELDMENT, ATFER TREATMENT MOUNT - D SERIES	
20	10402	12	BOLT, 3/8” X 1 1/4” BOLT	
22	48988	1	PLATE, SCR PANEL RUBBER HOLD DOWN	
23	10813	8	NUT, LOCK - .375”	
24	(No Replacement Part)		RUBBER SHIELD	
25	15542	10	BOLT - .375” X .75”	
26	15528	14	WASHER, SAE FLAT - .375”	
27	10802	8	WASHER, FLAT - .375”	
28	48996	1	PLATE, SCR PANEL SUPPORT - RH	
29	48997	1	PLATE, SCR PANEL SUPPORT - LH	
30	48963	1	SHIELD, HEAT	
31	11707	8	BOLT - .375” X 1”	
32	57841	1	INSULATION, EXHAUST PIPE - D-SERIES	

📖 See referenced page for component or assembly breakdown.

NOTE:
Parts listed are consistent for CUMMINS L9 - STAGE V (365 HP) engine ONLY.

ENGINE PARTS AND INSTALLATION

CUMMINS QSL9 TPEM EXPORT ENGINE MUFFLER AND MUFFLER MOUNT INSTALLATION ONLY

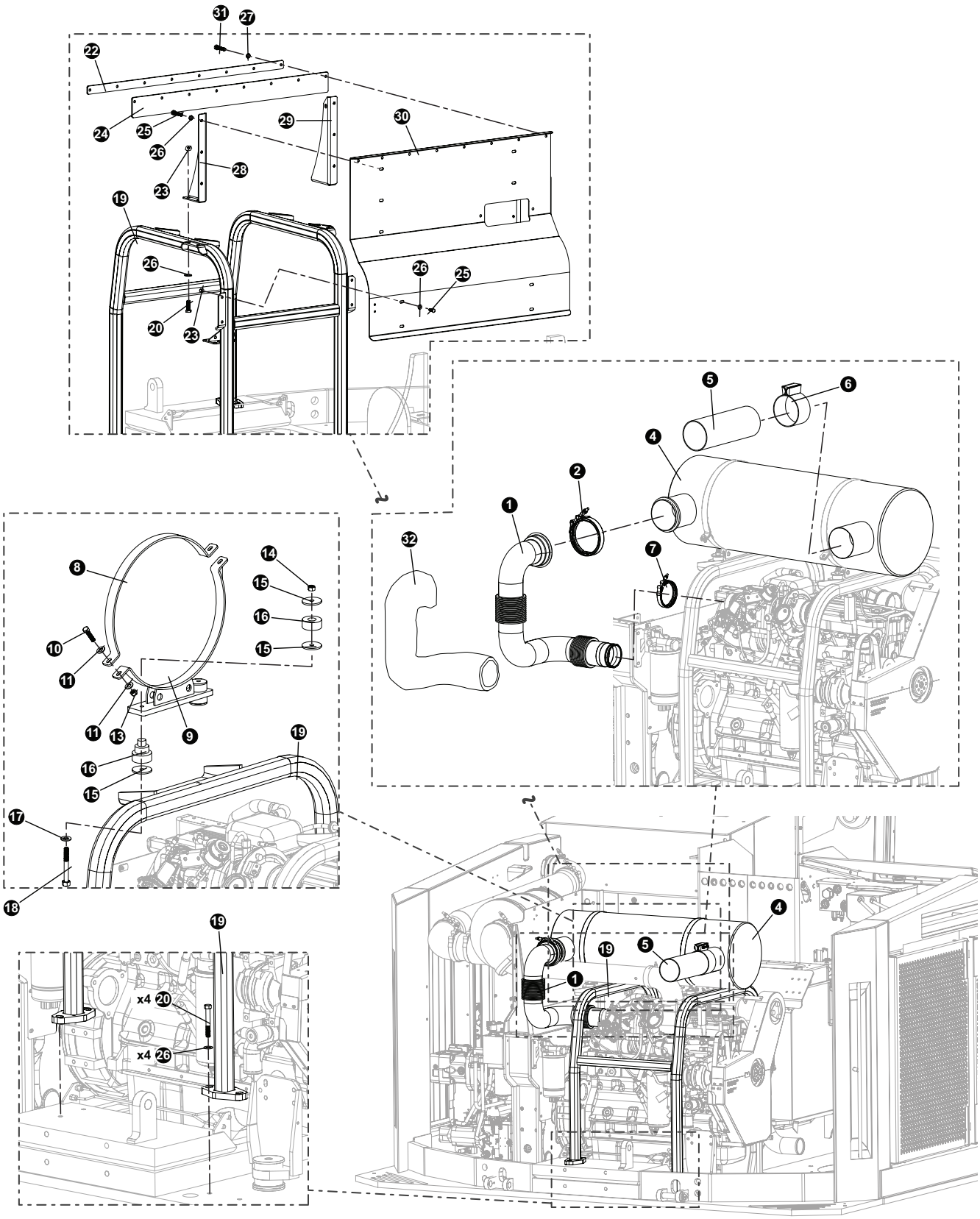

ENGINE PARTS AND INSTALLATION
CUMMINS QSL9 TPEM EXPORT ENGINE MUFFLER AND MUFFLER MOUNT INSTALLATION ONLY

REF	PART #	QTY	DESCRIPTION	SEE SECTION
1	62201	1	PIPE, EXHAUST - TAIL SWING STAGE 5	
2	16249	1	CLAMP, STRAP BAND - 5.5”	
4	58065	1	MUFFLER, SCR - CUMMINS	
7	20452	1	CLAMP, TURBO EXHAUST - C8.3 ELITE	
8	60381	2	STRAP, SINGLE CAN MOUNT - AFTER TREATMENT	
9	60380	2	WELDMENT, SCR MTG CLAMP - D SERIES	
10	10822	4	BOLT - .3125” X 1.25”	
11	10801	8	5/16” WASHER	
13	10812	4	5/16-18 LOCKNUT	
14	10815	4	1/2” LOCKNUT	
15	46674	12	WASHER, FENDER - ISOLATOR	
16	55560	4	ISOLATOR, RUBBER - VOLVO MUFFLER - T4F	
17	10804	4	1/2” FLAT WASHER	
18	10893	4	BOLT - .5” X 3”	
19	48910	1	WELDMENT, ATFER TREATMENT MOUNT - D SERIES	
20	10402	12	BOLT, 3/8” X 1 1/4” BOLT	
22	48988	1	PLATE, SCR PANEL RUBBER HOLD DOWN	
23	10813	8	NUT, LOCK - .375”	
24	(No Replacement Part)		RUBBER SHIELD	
25	15542	10	BOLT - .375” X .75”	
26	15528	14	WASHER, SAE FLAT - .375”	
27	10802	8	WASHER, FLAT - .375”	
28	48996	1	PLATE, SCR PANEL SUPPORT - RH	
29	48997	1	PLATE, SCR PANEL SUPPORT - LH	
30	48963	1	SHIELD, HEAT	
31	11707	8	BOLT - .375” X 1”	
32	57841	1	INSULATION, EXHAUST PIPE - D-SERIES	

📖 See referenced page for component or assembly breakdown.

NOTE:
Parts listed are consistent for CUMMINS QSL9 - TPEM (325 HP) Export Engine ONLY.

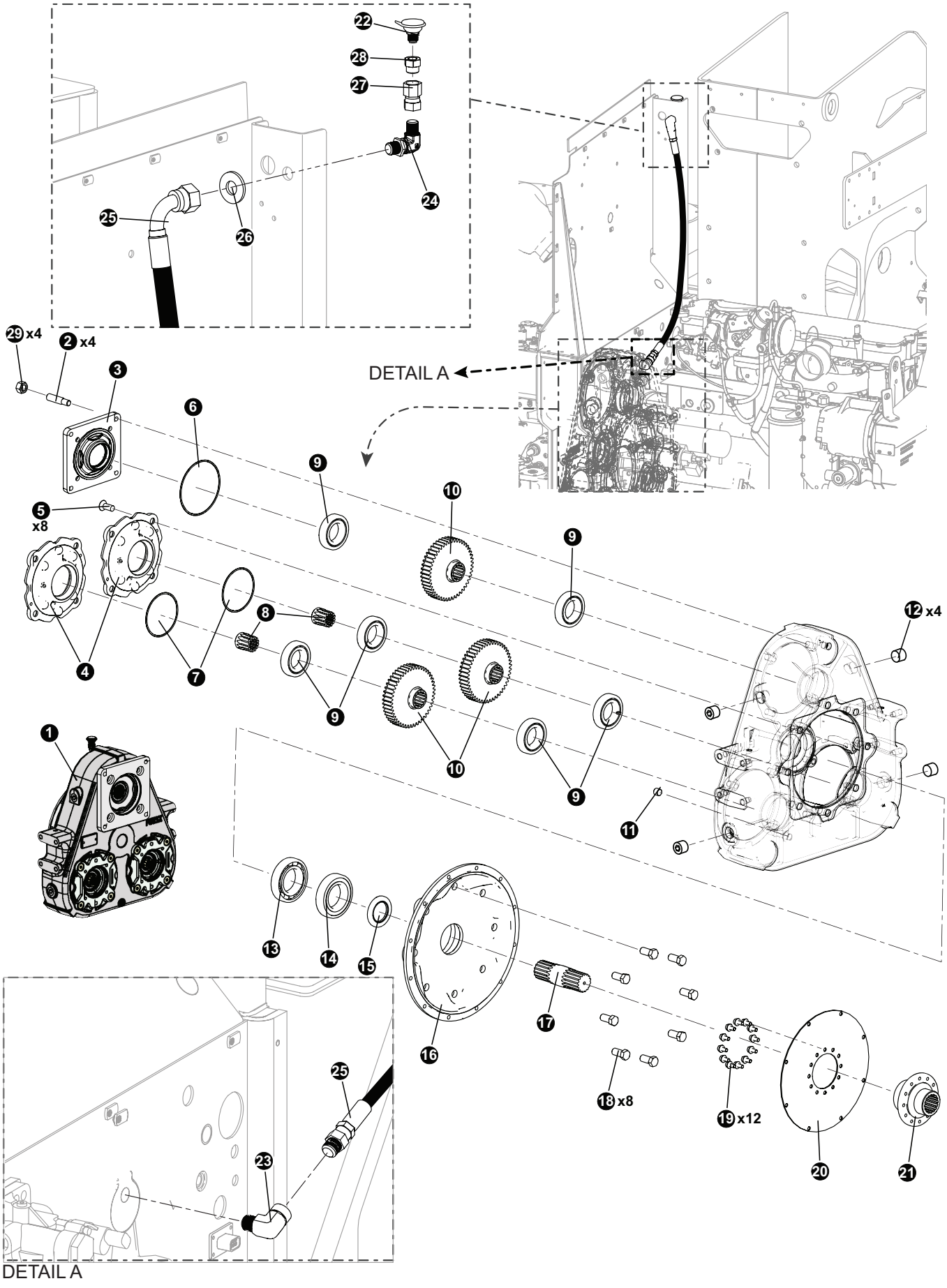
22
28
27
24
25
26
29 x4
2 x4
3
6
9
10
5 x8
4
7
8
12 x4
1
13
14
15
16
17
18 x8
19 x12
20
21
23
DETAIL A
DETAIL A

ENGINE PARTS AND INSTALLATION
PUMP DRIVE TRANSMISSION BREAKDOWN - STANDARD ALL PACKAGES

REF	PART #	QTY	DESCRIPTION	SEE SECTION
-	55673	1	TRANSMISSION, TRIPLE PUMP DRIVE (.723:1)	
1	F13015000	4	NUT	
2	18293	4	THREADED STUD (Supplier # 40281351)	
3	18292	1	COVER, TOP	
4	54767	2	COVER, BOTTOM (Supplier # YZ280186)	
5	F1122824	8	FASTENER	
6	F37030258	1	GASKET	
7	F37030248	2	GASKET	
8	16330	2	ADAPTOR SLEEVE (Supplier # 4028056)	
9	YZ104564_ASM	3	BEARING,	
10	51408	3	GEAR,	
11	F202004	1	INSERT COVER	
12	F1900316	4	INSERT COVER	
13	18892	1	BEARING (Supplier # F40214)	
14	18891	1	BEARING (Supplier # F40214S)	
15	18027	4	SEAL	
16	4059411	1	COVER, engine adapter housing (See Note #2 Below)	
17	18388	1	SHAFT	
18	F1008024	8	FASTENER	
19	YZ280039	12	FASTENER	
20	18028	1	PLATE	
21	YZ100938	1	PINION FLANGE YOKE	
22	21304	1	VENT AP	
23	16251	1	ELBOW, 90 STREET - 5502-4	
24	55347	1	FITTING, ELBOW - BULKHEAD 6 WETX-WLN-S	
25	(See Description)	1	HOSE, **Supplier Part # 387TC 38 06-06JS-06J9** (Triple Drive Vent Hose)	
26	98631 (Supplier #)	1	5/8” TRU TORQ, EXTRA THICK FLAT WASHER: 15/64” THICK, 21/32” ID, 1 5/16” OD	
27	57422	1	FITTING, 6-6 G6X-S	
28	11318	1	BUSHING, REDUCER - 5406-6-4	

❑ Kit or Assembly - includes all items indented underneath.

Note #1:
Use Loctite 272 (blue) during installation.

Note #2:
Use Silicone sealant during installation.

Note #3:
Use teflon sealant during installation.

NOTE:
Parts listed are consistent for CUMMINS L9 - STAGE V (365 HP) engine / CUMMINS QSL9 - TPEM (325 HP) Engine unless otherwise noted.

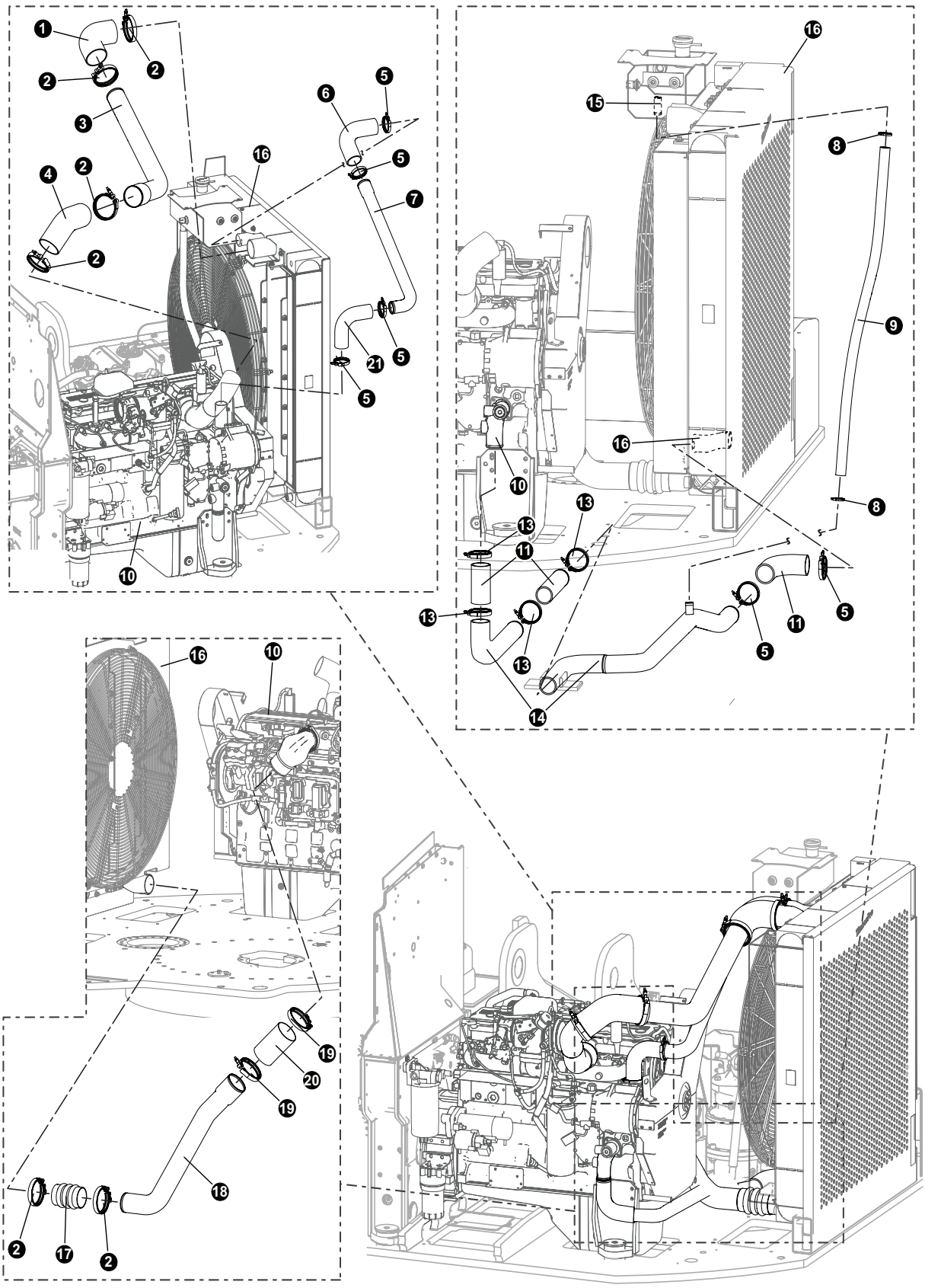
1
2
2
3
4
2
2
16
6
5
5
7
21
5
5
10
16
15
8
9
16
10
8
13
13
11
13
5
11
5
13
14
16
10
19
20
19
18
2
17
2

ENGINE PARTS AND INSTALLATION

ENGINE CHARGE AIR - AIR TO AIR CONNECTIONS AND INSTALLATION - STANDARD ALL PACKAGES

REF	PART #	QTY	DESCRIPTION	SEE SECTION
1	52753	1	ELBOW, 90 - 3.5” X 6” SILICONE	
2	52862	6	CLAMP, spring hose - 4” (Supplier #**3926703**)	
3	60440	1	TUBE, UPPER CAC TO MANIFOLD	
4	52729	1	ELBOW, 48 - 4” BOOT (AIR TO AIR)	
5	18103	2	CLAMP, CONSTANT TORQUE - #40	
6	57992	1	HOSE, RADIATOR - D-SERIES	
7	48583	1	TUBE, UPPER COOLANT LINE-TAIL SWING	
8	15629	2	CLAMP, HOSE - WORM STYLE - 1.5”	
9	(See Description)	1	HOSE, (Supplier #**8031957 16-0-0-SW**)	
10	(SEE PAGE)	1	ENGINE, CUMMINS	EE-1-1
11	57992	2	HOSE, RADIATOR - D-SERIES	
13	18104	2	CLAMP, CONSTANT TORQUE - #36	
14	48582	1	TUBE, LOWER COOLANT LINE-TAIL SWING	
15	(SEE PAGE)	1	TANK, SURGE - D SERIES (HI VOLUME)	UP-1-9
16	(SEE PAGE)	1	RADIATOR / COOLER ASSEMBLY	UP-3-2
17	52861	4	HOSE, HUMP - SILICONE (3 WIRE CUMMINS)	
18	48387	1	TUBE, BOTTOM CAC - ENGINE CA IN	
19	15697	2	CLAMP, STRAP BAND - 4.5”	
20	55646	1	HOSE, AIR TO AIR - CUMMINS - 4” X 4” STR	
21	15617	1	HOSE, 90 DEGREE RADIATOR - 2 1/4 ID	

📖 See referenced page for component or assembly breakdown.
❑ Kit or Assembly - includes all items indented underneath.

NOTE:
Parts listed are consistent for CUMMINS L9 - STAGE V (365 HP) engine / CUMMINS QSL9 - TPEM (325 HP) Engine unless otherwise noted.

ENGINE PARTS AND INSTALLATION
CUMMINS STAGE V ENGINE DEF TANK ASSEMBLY AND INSTALLATION

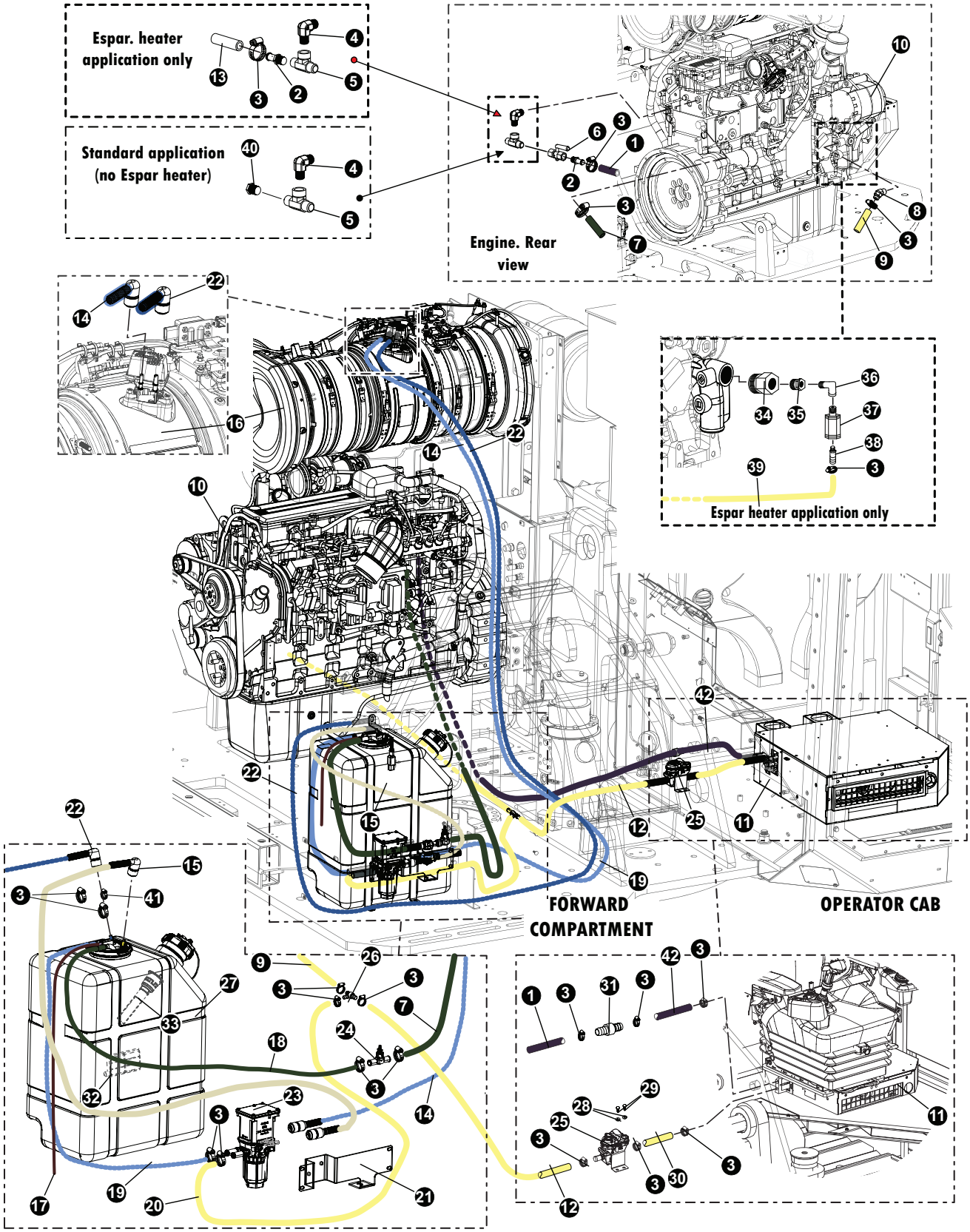

ENGINE PARTS AND INSTALLATION
CUMMINS STAGE V ENGINE DEF TANK ASSEMBLY AND INSTALLATION

REF	PART #	QTY	DESCRIPTION	SEE SECTION
1	58024	1	HOSE, HEATER - 5/8" X 64" (GATES 28473) (Engine to AC Heater Unit)	
2	51774	2	CONNECTOR, STR HOSE BARB - .5 X 5/8	
3	16256	20	CLAMP, HOSE - WORM STYLE - 1"	
4	52785	1	ELBOW, MALE PIPE - ¾ X ½ CR-S	
5	51879	1	TEE, RUN - .5" (1/2 MR0-S)	
6	51714	1	VALVE, BALL - WATER SHUT OFF HEATER 1/2"	
7	58024	1	HOSE, HEATER - 5/8" X 64" (GATES 28473) (Engine to Coolant Control Valve) Hose cut to 46"	
8	57805	1	FITTING, 179HB-10-8	
9	58024	1	HOSE, HEATER - 5/8" X 64" (GATES 28473) (Engine to Tee Connector)	
10	(Click Here)	1	ENGINE, CUMMINS L9 -STAGE V 338 HP D	EE-1
11	(Click Here)	1	KIT, HEATER/AC - D SERIES - LEFT CAB	OC-4
12	58024	1	HOSE, HEATER - 5/8" X 64" (GATES 28473) (Tee Hose Barb to Water Valve) Hose cut to 46"	
13	58024	1	HOSE, HEATER - 5/8" X 64" (GATES 28473) (Engine to Espar Unit)	
14	(See Description)	1	HOSE, DEF RETURN (Supplier Part # 4388441)	
15	(See Description)	1	HOSE, DEF PRESSURE (Supplier Part # 4377353)	
16	(See Description)	1	No Replacement Part in System (Nothing under 57762 Service Parts)	
17	58024	1	HOSE, HEATER - 5/8" X 64" LF (GATES 28473) (DEF Tank Breather) Hose cut to 18"	
18	58024	1	HOSE, HEATER - 5/8" X 64" LF(GATES 28473) (DEF Tank OUT to SCR Water Valve) Hose cut to 34"	
19	58024	1	HOSE, HEATER - 5/8" X 64" LF(GATES 28473) (DEF Tank IN to Doser Pump) Hose cut to 34"	
20	58024	1	HOSE, HEATER - 5/8" X 64" (GATES 28473) (Doser Pump to Tee Hose Barb) Hose cut to 46"	
21	60134	1	PLATE, DEF DOSER MOUNT - STAGE V	
22	(See Description)	1	HOSE, (Supplier Part # SCR6E400FAFC215)	
23	(See Description)	1	PUMP, DOSER (Supplier Part # A055V395)	
24	(See Description)	1	VALVE, COOLANT CONTROL (Supplier Part # A0475305-10)	
25	58069	1	VALVE, WATER KIT	
26	57903	1	TEE, HOSE BARB - 5/8" PIPE	
27	(See Description)	1	TANK, DEF 15 GAL. (Supplier Part # 4353889)	
28	10800	4	WASHER, FLAT - .25"	
29	15604	2	BOLT - .25" X .75"	
30	58024	1	HOSE, HEATER - 5/8" X 64" LF (GATES 28473) (Water Valve to AC . . Heater) Hose cut to 24"	
31	52578	1	BARB, HOSE 5/8" BRASS SPLICER	

IMPORTANT:
58057, FAN, DEF - STAGE 5 D-SERIES IS AN OBSOLETE PART. FAN IS NOT NEEDED PER SR. MANAGEMENT AND CANNOT BE REPLACED.

📖 See reference page for component or assembly breakdown.
❑ Kit or Assembly - includes all items indented underneath.
✂ Sold in bulk per foot - Please specify length when ordering.

ENGINE PARTS AND INSTALLATION
TL-775 CHARGE MANIFOLD ASSEMBLY AND INSTALLATION

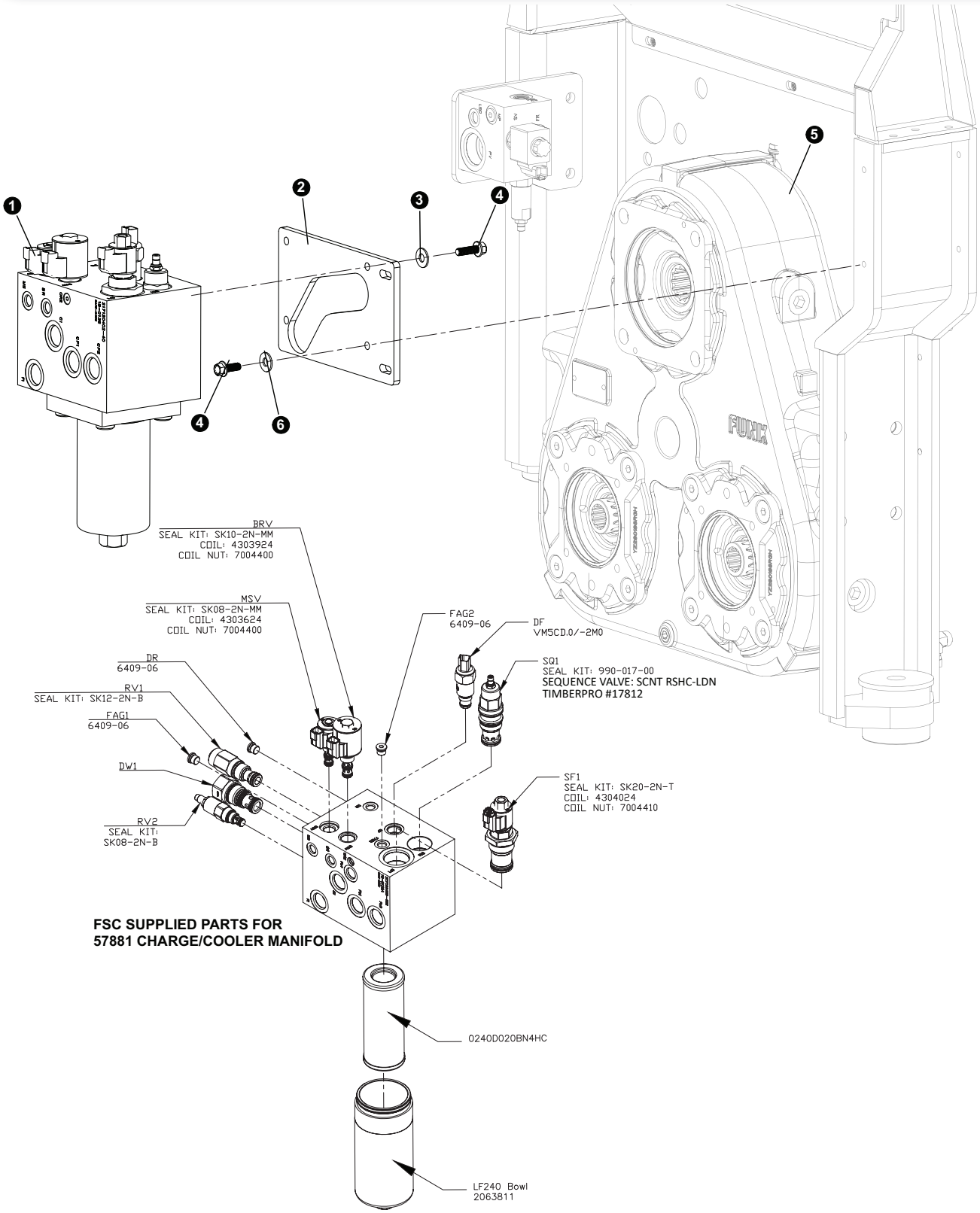

ENGINE PARTS AND INSTALLATION
TL-775 CHARGE MANIFOLD ASSEMBLY AND INSTALLATION

REF	PART #	QTY	DESCRIPTION ..... SEE SECTION
1	(See Illustration)	1	MANIFOLD, CHARGE / COOLER - D SERIES (57881)
2	60391	1	PLATE, CHARGE BLOCK MOUNT - D
3	15528-UP	4	WASHER, SAE FLAT - .375”
4	11707-UP	6	BOLT - .375” X 1”
5	(Click Here)	1	BARRIER, ENGINE - D MODEL EE-1
6	10802-UP	2	WASHER, FLAT - .375”

PAGE INTENTIONALLY LEFT BLANK

SECTION OC-1
OPERATOR CAB ASSEMBLY AND INSTALLATION

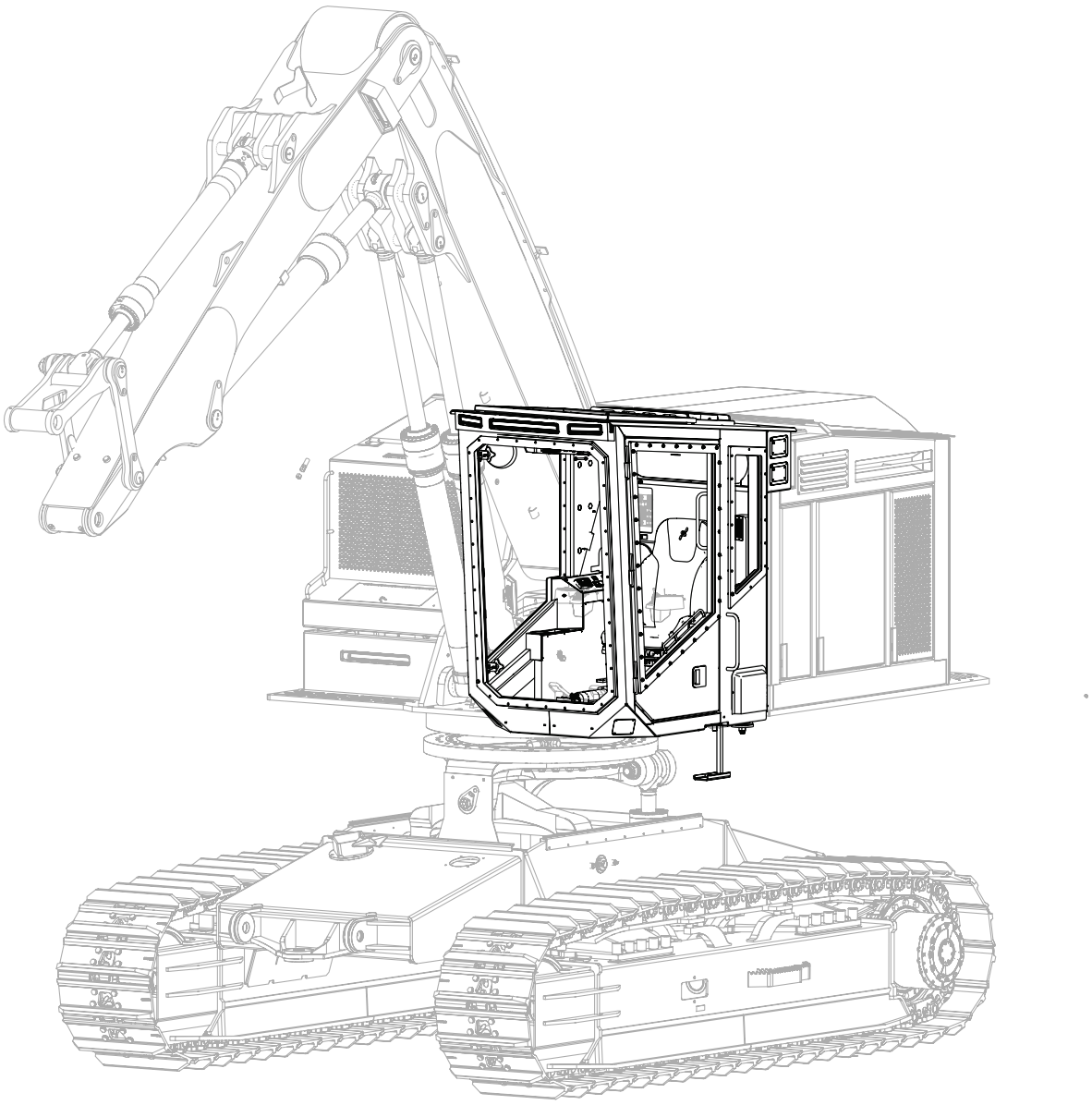

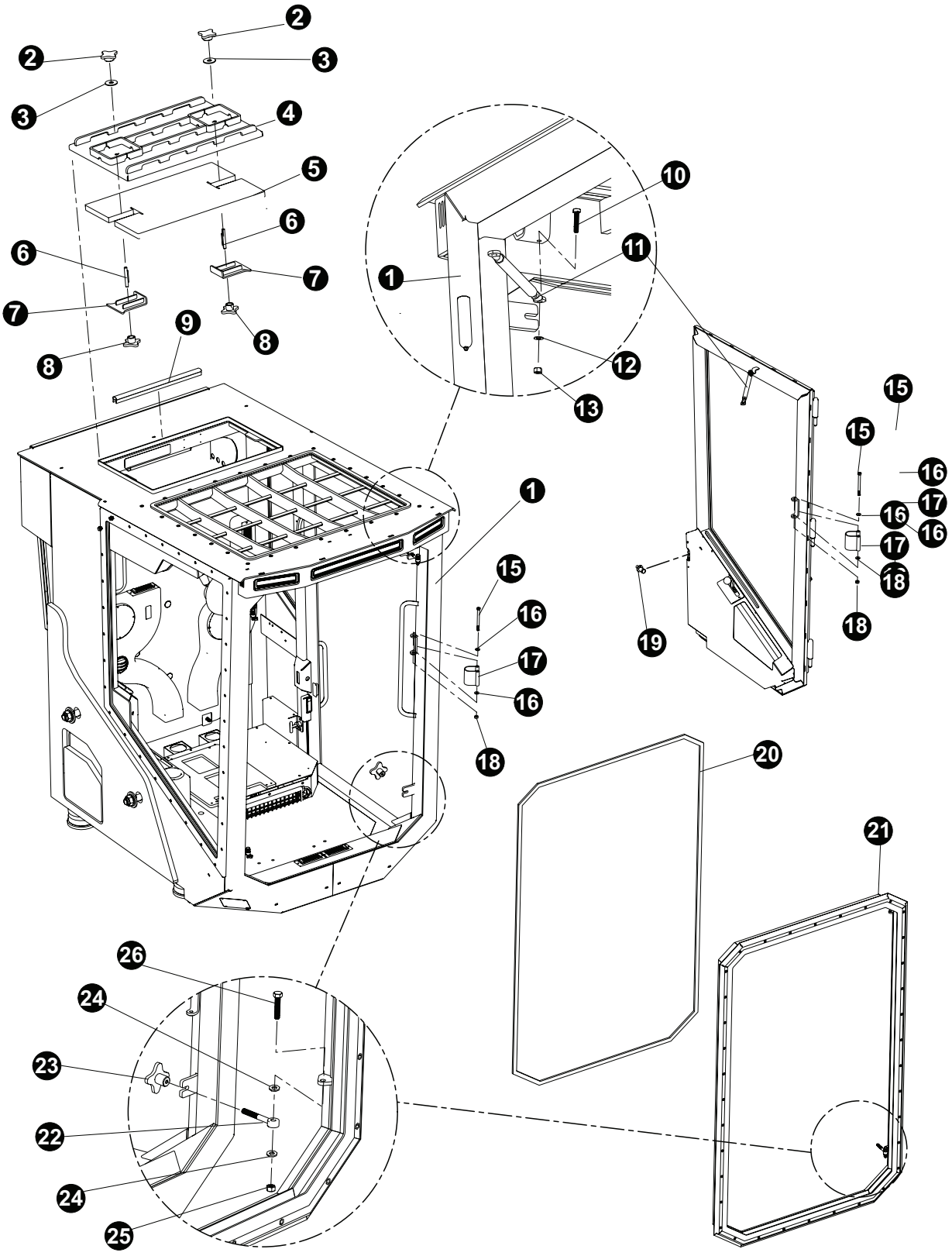
2
2
3
3
4
5
6
6
7
7
8
8
9
10
11
1
12
13
15
15
16
16
17
16
16
17
18
18
19
1
15
16
17
16
18
20
21
26
24
23
22
24
25

OPERATOR CAB ASSEMBLY AND INSTALLATION

CAB EXTERIOR COMPONENT ASSEMBLY AND INSTALLATION

REF	PART #	QTY		DESCRIPTION	SEE SECTION
1	49146	1	❑	WELDMENT, CAB ASSEMBLY (D-SERIES)	
2	49514	2		KNOB, STAR - EMERGENCY ESCAPE	
3	63246	2		SEAL, EMERGENCY ESCAPE	
4	49190	1		HATCH, ESCAPE TOP CAB - D SERIES	
5	49520	1		FOAM, ACOUSTIC ESCAPE HATCH - D CAB	
6	49516	2		STUD, 2 WAY - D CAB	
7	49509	2		BRACKET, ESCAPE HATCH - D CAB	
8	52061	2		KNOB, STAR - EMERGENCY ESCAPE INSIDE ROOF	
9	24925	10 ft	✂	WEATHERSTRIPPING	
10	18016	2		BOLT, DOOR SHOCK	
11	55121	1		SHOCK, GAS - CAB DOOR	
12	1012571	4		WASHER, DOOR SHOCK	
13	63216	2		NUT, DOOR SHOCK	
14	49147	1		WELDMENT, DOOR	
15	15592	2		BOLT - .375” X 4”	
16	15528	4		WASHER, SAE FLAT - .375”	
17	57855	1		STRAP, DOOR - D-SERIES CAB	
18	10813	2		NUT, LOCK - .375”	
19	49175	1		STRIKER, STUD - CAB	
20	42378	10 ft	✂	WEATHERSTRIPPING, WINDOW 5/16x3/4x500’	
21	49366	1	❑	WELDMENT, HATCH FRONT WINDOW RETAINER D SERIES	
22	63388	4		SWING BOLT	
23	12013	4		KNOB, STAR - CAB WINDOW / AC ACCESS	
24	15528	8		WASHER, SAE FLAT - .375”	
25	10813	4		NUT, LOCK - .375”	
26	20084	2		BOLT - .375” X 1.75”	

❑ Kit or Assembly - includes all items indented underneath.
✂ Bulk material - order length required in feet or meters.

OPERATOR CAB ASSEMBLY AND INSTALLATION

CAB INSTALLATION AT UPPER TURNTABLE

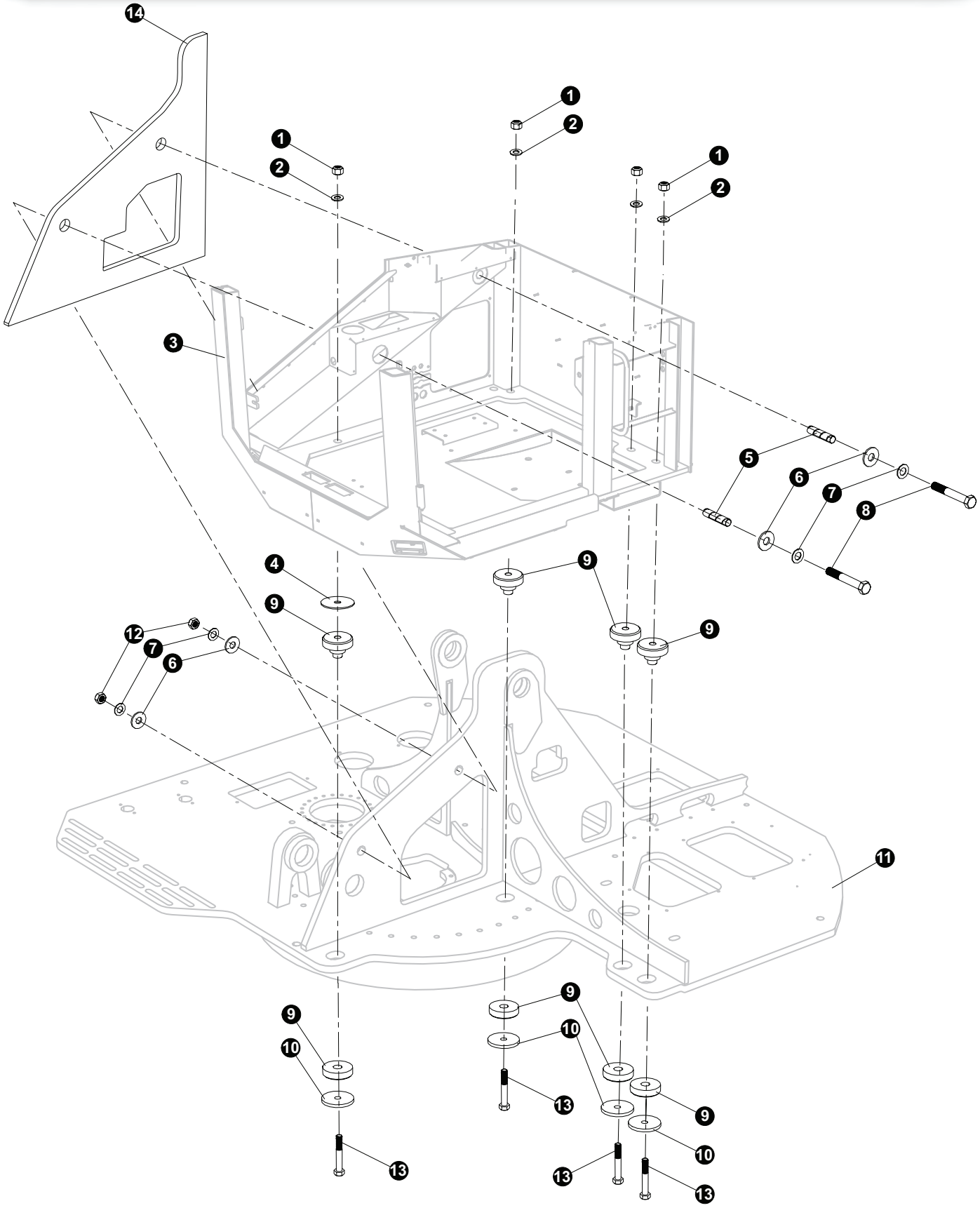

OPERATOR CAB ASSEMBLY AND INSTALLATION

CAB INSTALLATION AT UPPER TURNTABLE

REF	PART #	QTY		DESCRIPTION	SEE SECTION
1	18253	3		NUT, LOCK - 1”	
2	15579	4		WASHER, SAE FLAT - 1”	
3	(Click Here)	1	🕮	CAB WELDMENT	OC-1
4	54773	1		SHIM, CAB MOUNT - 1/4 INCH THICKNESS	
5	20843	2		PROTECTOR, HOSE - SPRIAL (.78")(BULK)	
6	17065	4		WASHER, rubber	
7	51320	4		WASHER, SAE FLAT - 1.125”	
8	53856	2		BOLT - 1.125-12 X 7.5” (FINE THREAD)	
9	18141	4		ISOLATOR, CAB MOUNTING	
10	19369	4		WASHER, cab mount isolator - (.5 thick)	
11	(Click Here)	1	🕮	UPPER TURNTABLE ASSEMBLY	UP-1
12	53857	2		NUT, LOCK - 1.125 (FINE THREAD)	
13	52240	4		BOLT - 1" X 7" (see note 1 below)	
14	46651	1		INSULATION, CAB TO BOOM	

🕮 See referenced page for component or assembly breakdown.

Note 1

Use loctite 271 (red) on treads during installation.

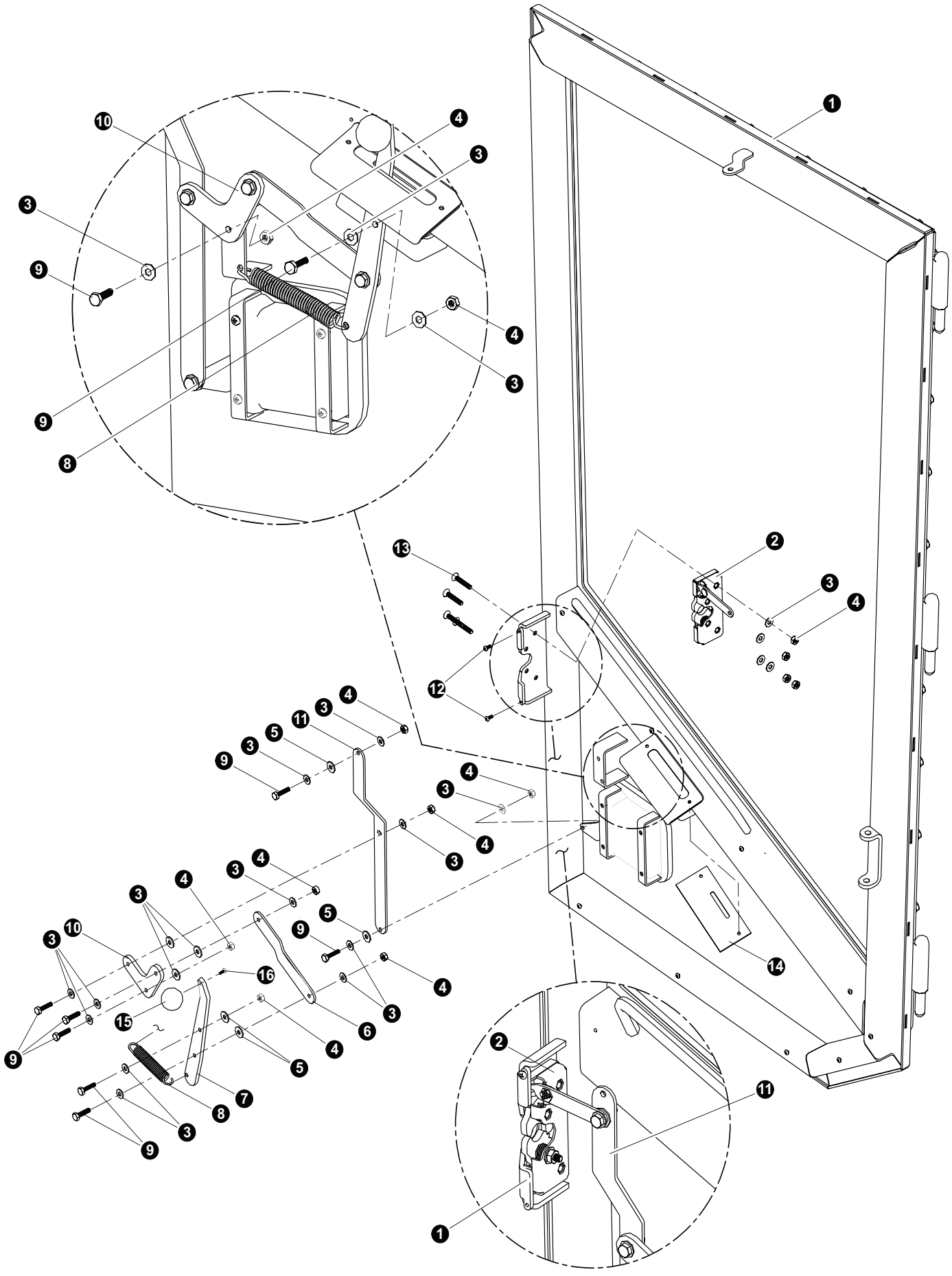
1
2
3
4
5
6
7
8
9
10
11
12
13
14
15
16

OPERATOR CAB ASSEMBLY AND INSTALLATION

DOOR ASSEMBLY AND LATCH INSTALLATION

REF	PART #	QTY		DESCRIPTION	SEE SECTION
1	49173	1		DOOR, CAB (hinges shipped loose)	
2	55118	1		LATCH, DOOR (INNER) (RH CAB)	
3	55118	19		1/4” SAE WASHER	
4	10811	11		NUT, LOCK - .25"	
5	57832	7		SPACER, PLASTIC - 5/16” LONG X 1/4” ID	
6	49209	1		LINK, DOOR LATCH	
7	49210	1		LEVER, DOOR RELEASE	
8	57900	1		SPRING, INNER DOOR RELEASE	
9	15576	7		BOLT - .25" X 1"	
10	47456	1		PIVOT LINK, DOOR LATCH	
11	49200	1		LINK, DOOR ACTUATOR - VERTICAL	
12	81463	2		10-24 X 1/2" UNC SCREW	
13	90273A546	4		SCREW	
14	49213	1		TRIM, RUBBER INNER DOOR HANDLE - D-SERIES	
15	57286	1		KNOB	
16	45040	1		BOLT	

❑ Kit or Assembly - includes all items indented underneath.
✂ Bulk material - order length required in feet or meters.

OPERATOR CAB ASSEMBLY AND INSTALLATION

DOOR ASSEMBLY AND COMPONENT INSTALLATION

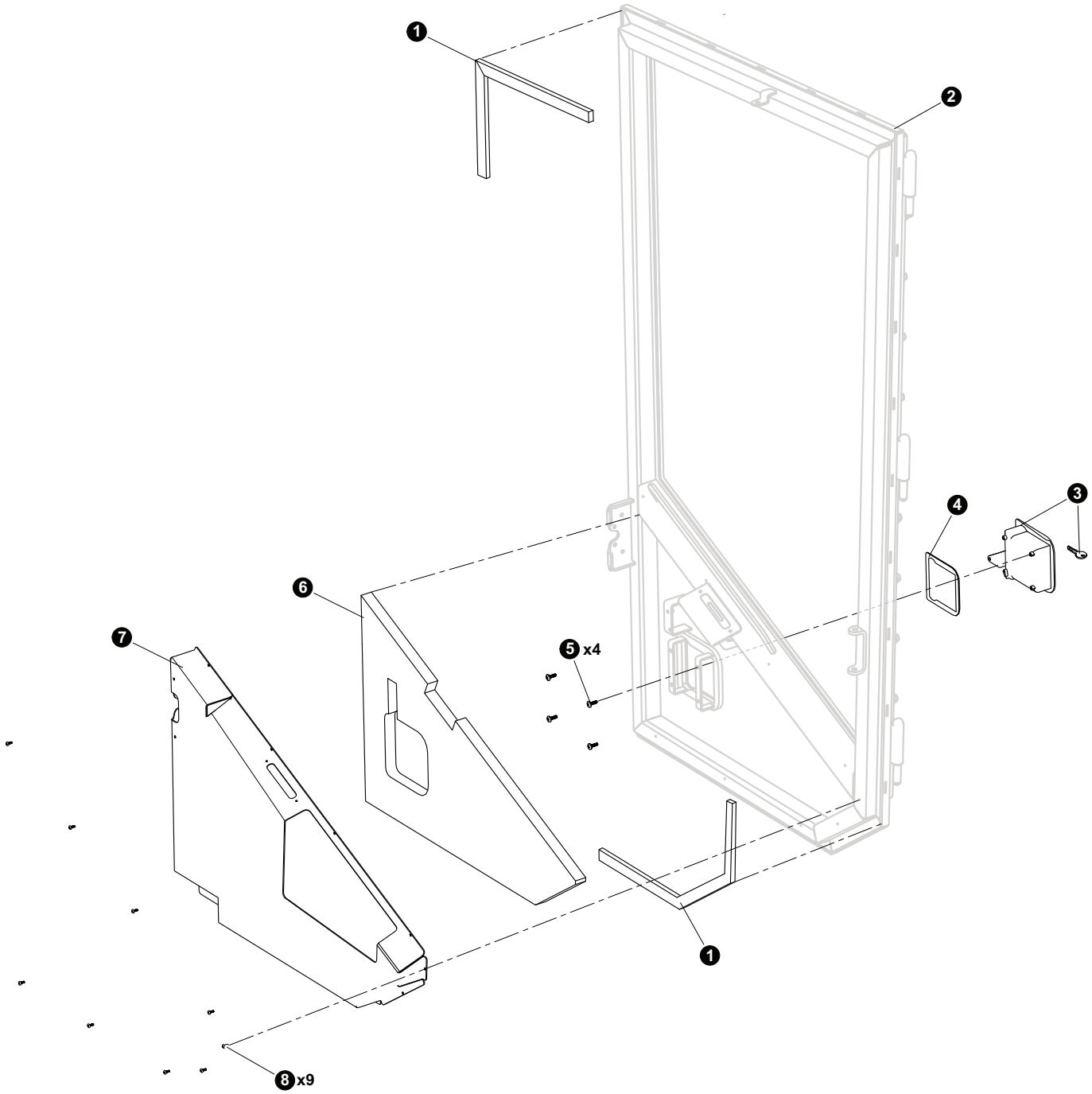

OPERATOR CAB ASSEMBLY AND INSTALLATION

DOOR ASSEMBLY AND COMPONENT INSTALLATION

REF	PART #	QTY		DESCRIPTION	SEE SECTION
1	42378	10 ft	✂	WEATHERSTRIPPING, WINDOW 5/16x3/4x500’	
2	(Click Here)	1		DOOR, CAB	OC-1
3	55015	1		HANDLE, DOOR - OUTSIDE - RH CAB B/D SER	
4	57863	1		GASKET, HANDLE - OUTSIDE CAB DOOR	
5	81463	1		SCREW	
6	49555	1		FOAM, ACOUSTIC DOOR - D CAB	
7	49203	1		PANEL COVER,	
8	22862	4		10-24x1/2" UNC W/ 1/8" KEY	

❑ Kit or Assembly - includes all items indented underneath.
✂ Bulk material - order length required in feet or meters.

OPERATOR CAB ASSEMBLY AND INSTALLATION

DOOR STEP ASSEMBLY AND INSTALLATION

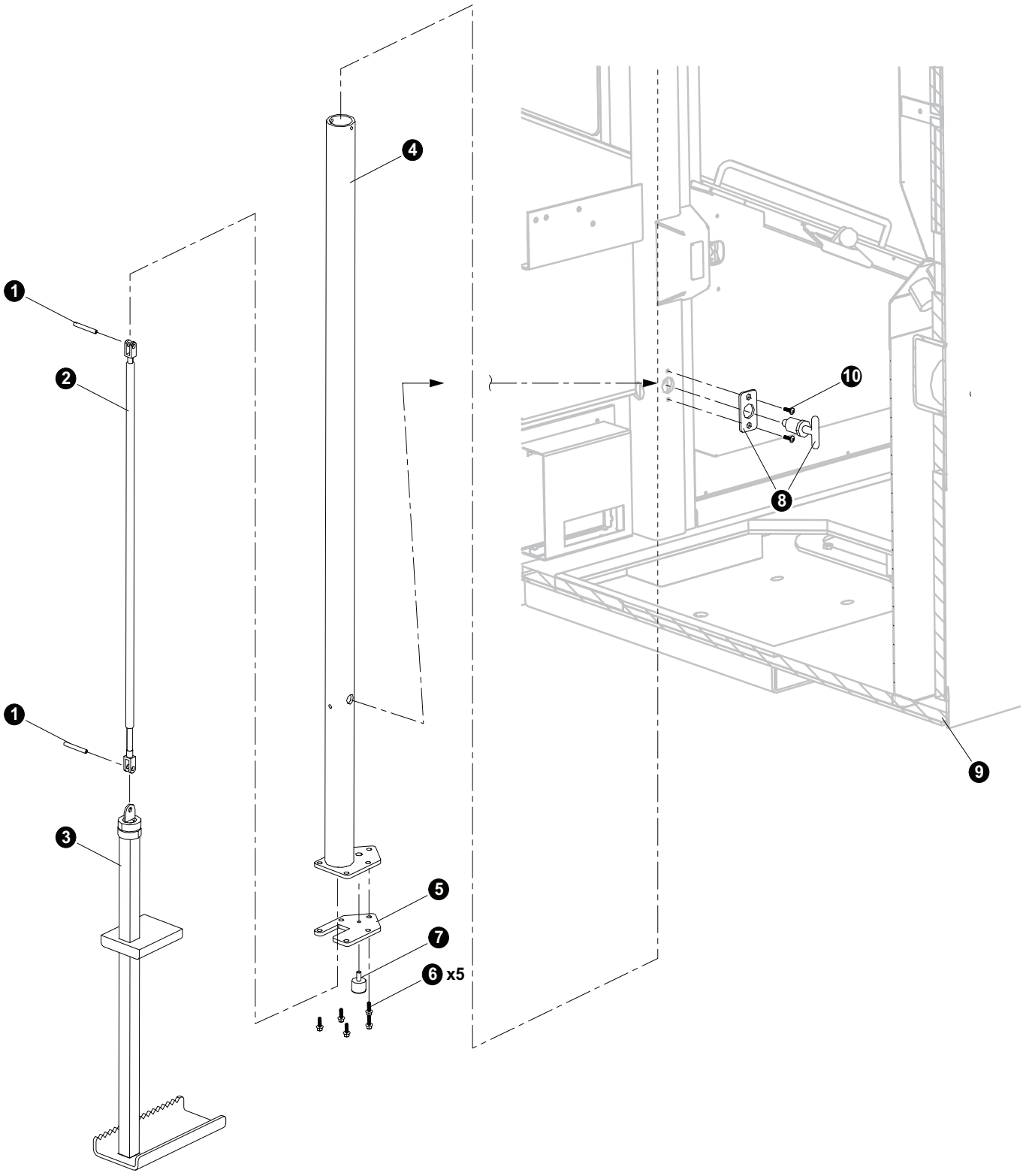

OPERATOR CAB ASSEMBLY AND INSTALLATION

DOOR STEP ASSEMBLY AND INSTALLATION

REF	PART #	QTY		DESCRIPTION	SEE SECTION
-	47486-B	1	❑	ASSEMBLY, CAB STEP	
1	90692A749 (Sup. #)	1		PIN, ROLL - CAB STEP	
2	54141	1		SHOCK, STEP - CAB (RETRACTABLE)	
3	47483-B	1		WELDMENT, CAB STEP	
4	47475B	1		TUBE&PLATE WELDMENT	
5	47485B	1		PLATE, STEP RETAINER	
6	15589	7		BOLT - .3125" X 1"	
7	52780	1		BUMPER, Rubber Stop - Cab Step	
8	54117	1		Bracket, Latch	
9	(Click Here)	1		OPERATOR'S CAB	OC-1
10	15605	2		BOLT - .3125" X .75"	

❑ Kit or Assembly - includes all items indented underneath.
✂ Bulk material - order length required in feet or meters.

PAGE INTENTIONALLY LEFT BLANK

SECTION OC-2
OPERATOR CAB WINDOW ASSEMBLY AND INSTALLATION

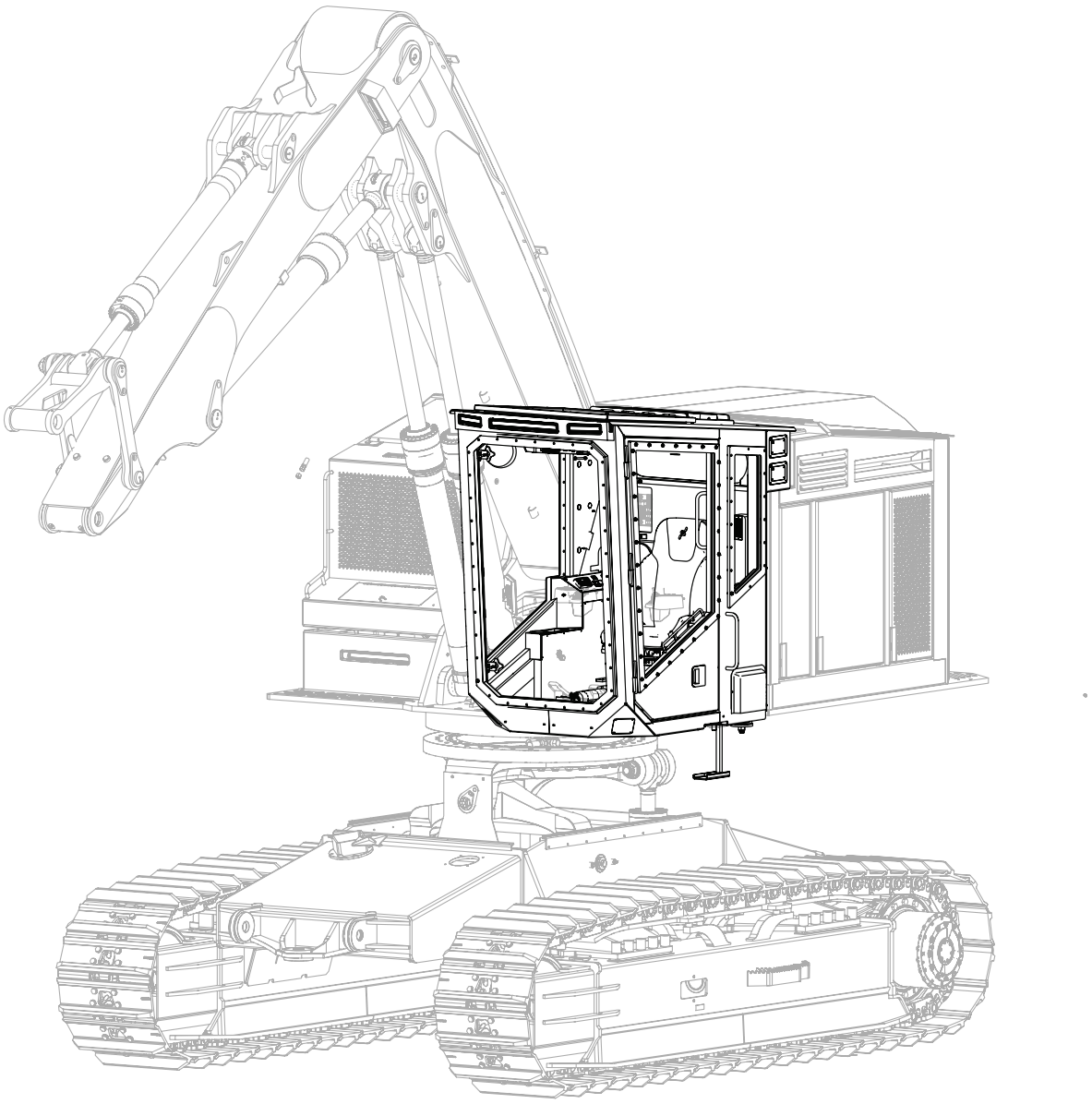

OPERATOR CAB ASSEMBLY AND INSTALLATION

CAB WINDOW ASSEMBLY AND INSTALLATION

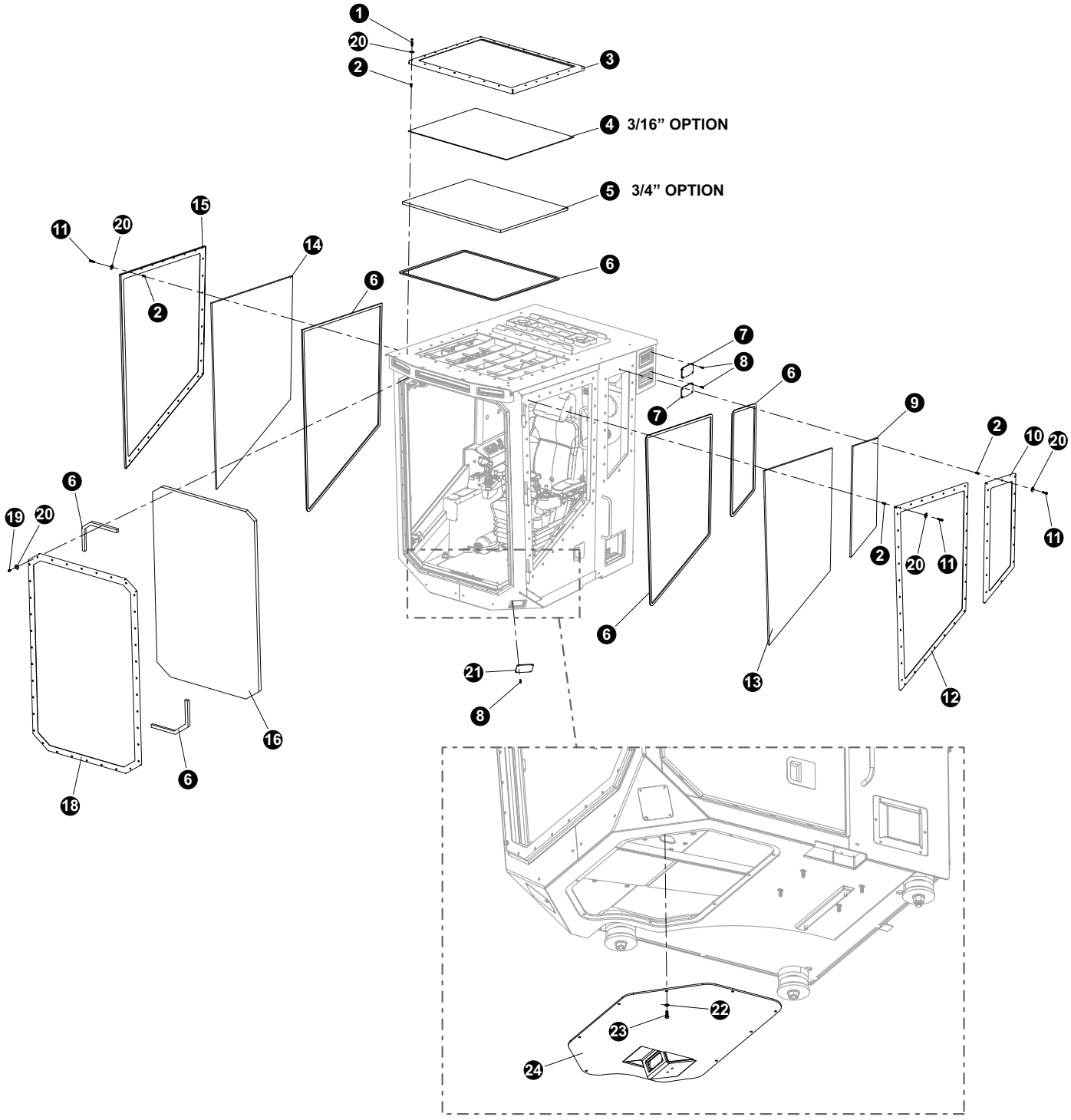

OPERATOR CAB ASSEMBLY AND INSTALLATION

CAB WINDOW ASSEMBLY AND INSTALLATION

REF	PART #	QTY		DESCRIPTION	SEE SECTION
1	15529-OC	26		BOLT - .375” X 2”	
2	49151-OC	106		NUT, RIVET 3/8”-16 2B MAXTITE	
3	49217-OC	1		RETAINER, SKYLIGHT WINDOW FRAME	
4	49532-OC	1		LEXON, SKYLIGHT - SACRIFCIAL 3/16” “ D-SERIES	
5	49216-OC	1		LEXON, SKYLIGHT - 3/4” D-SERIES	
6	42378-OC	1	✂	WEATHERSTRIPPING, WINDOW 5/16x3/4x500’	
7	49222-OC	1		LEXON, LIGHT - CAB REAR D-SERIES	
8	15542-OC	8		BOLT - .375” X 3/4”	
9	49370-OC	1		LEXON, REAR CAB WINDOW 3/4” - OPERATOR	
10	49371-OC	1		RETAINER, REAR WINDOW FRAME	
11	20084-OC	80		BOLT - .375” X 1 3/4”	
12	49214-OC	1		RETAINER, DOOR WINDOW FRAME	
13	49215-OC	1		LEXON, DOOR - D SERIES	
14	49339-OC	1		LEXON, BOOM SIDE D-SERIES	
15	49338-OC	1		RETAINER, BOOMSIDE WINDOW FRAME	
16	49347-OC	1		LEXON, FRONT WINDOW - 1.25” D-SERIES	
18	49359-OC	1		RETAINER, FRAME - FRONT WINDOW D-SERIES	
19	15542-OC	36		BOLT - .375” X 3/4”	
20	15528-OC	142		WASHER, SAE FLAT - .375”	
21	49224-OC	1		LEXON, LIGHT - FRONT LOWER D-SERIES	
22	15559-OC	10		.31 SAE GR 9 FLATWASHER	
23	15589-OC	10		HHCS, .31-18 NC X 1”	
24	49226-OC	1		COVER, MOUNT - 3 LED LIGHTS D-SERIES	

📖 See referenced page for component or assembly breakdown.
✂ Bulk material - order length required in feet or meters.

PAGE INTENTIONALLY LEFT BLANK

SECTION OC-3
OPERATOR CAB INTERIOR ASSEMBLY AND INSTALLATION

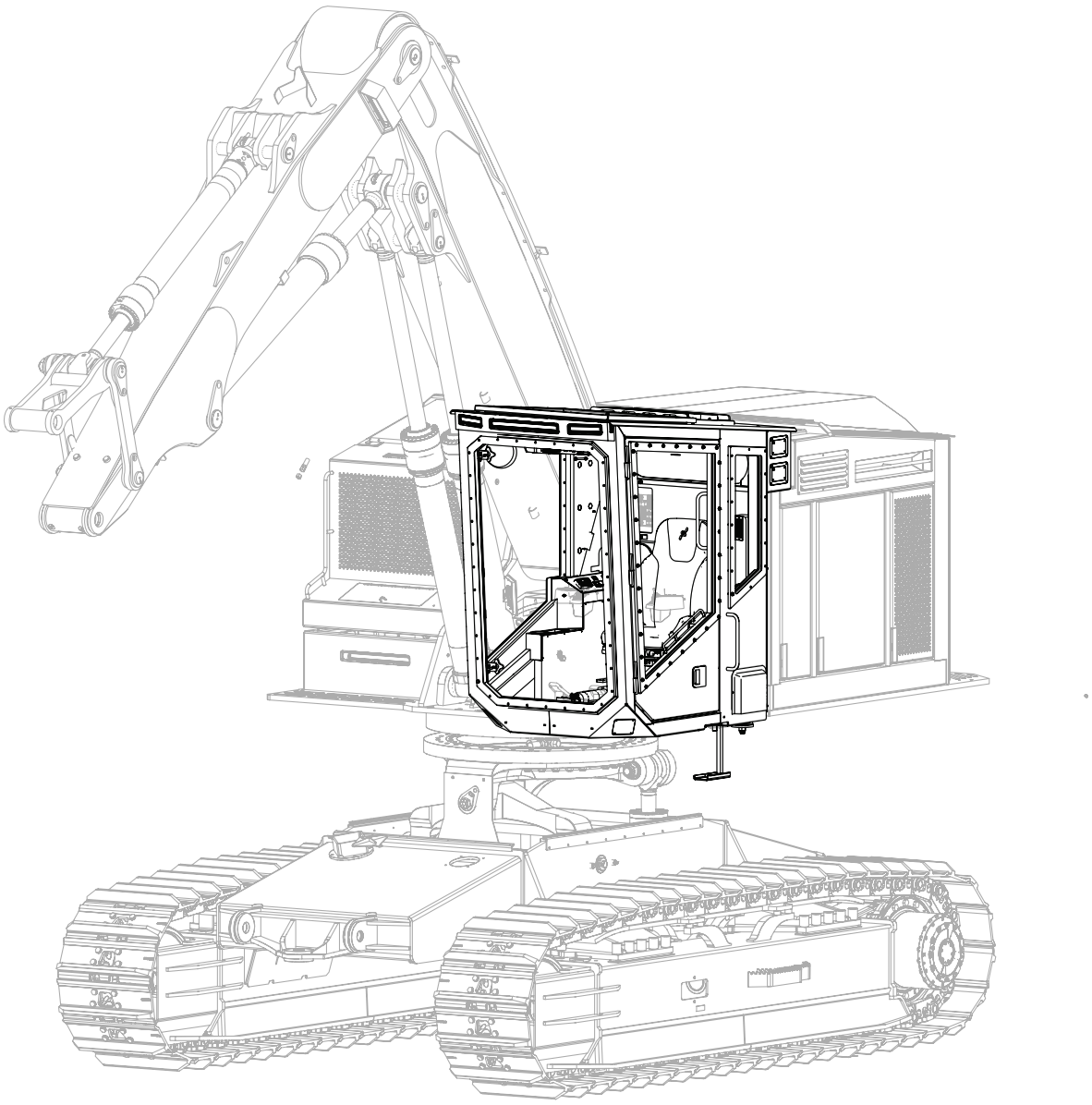

OPERATOR CAB ASSEMBLY AND INSTALLATION

INTERIOR COMPONENTS ASSEMBLY AND INSTALLATION

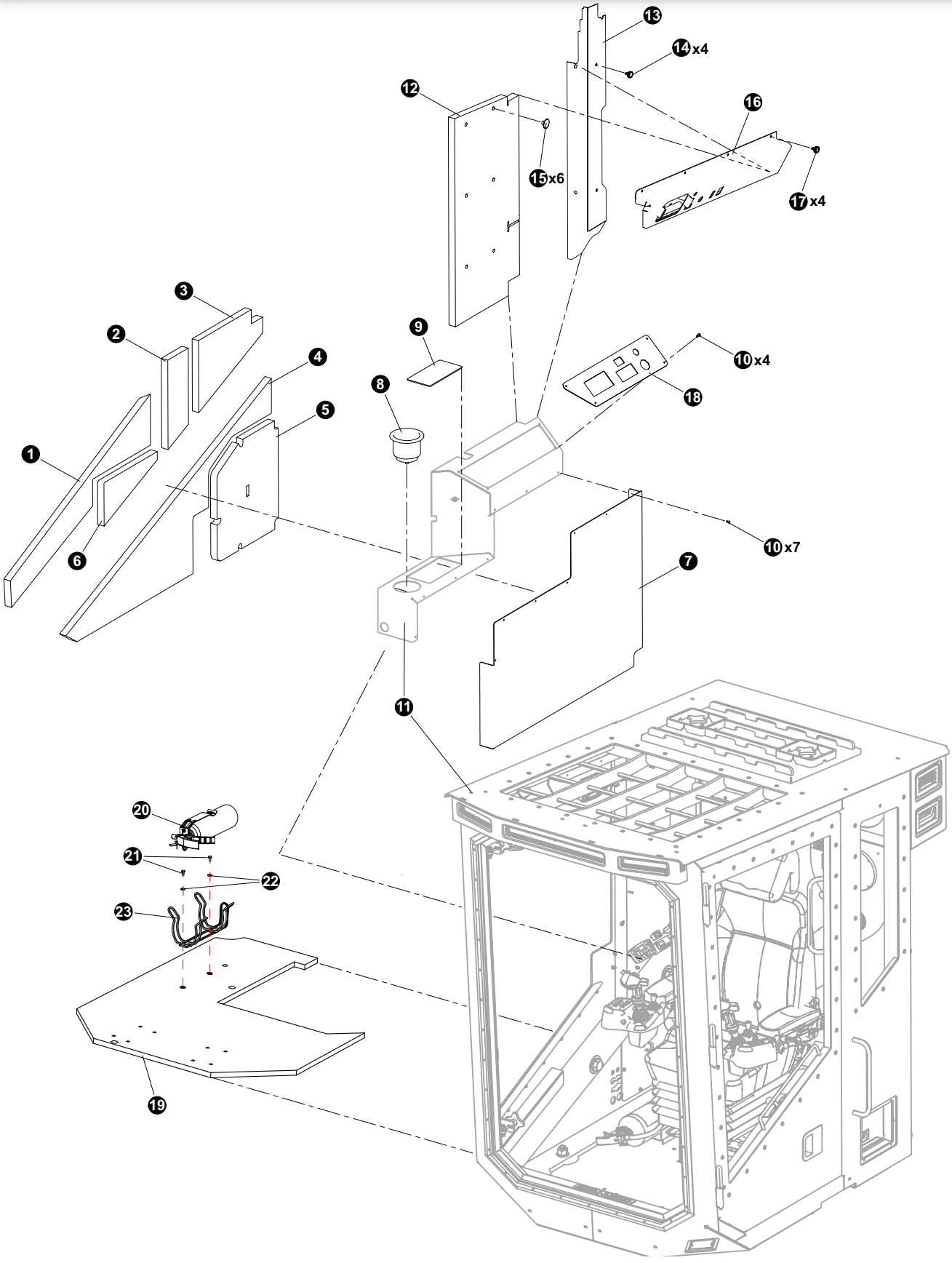

OPERATOR CAB ASSEMBLY AND INSTALLATION

INTERIOR COMPONENTS ASSEMBLY AND INSTALLATION

REF	PART #	QTY		DESCRIPTION	SEE SECTION
-	57813	1	❑	KIT, CAB INSULATION - D SERIES	
1	49525	1		FOAM, ACOUSTIC BOOM SIDE - D CAB	
2	49527	1		FOAM, ACOUSTIC BOOM SIDE - D CAB	
3	49528	1		FOAM, ACOUSTIC BOOM SIDE CONSOLE LOWER	
4	49522	1		FOAM, ACOUSTIC BOOM SIDE LOWER - D CAB	
5	49524	1		FOAM, ACOUSTIC BOOM SIDE HATCH - D CAB	
6	49526	1		FOAM, ACOUSTIC BOOM SIDE - D CAB	
7	49111	1		COVER, SIDE CONSOLE	
8	54997	15		HOLDER, CUP - 735/830-C	
9	58013	1		RUBBER, MAT - COIN TRAY D-SERIES CAB	
10	81436	11		BOLT, 1/4-20 X 1/2”	
11	(Click Here)	1		WELDMENT, CAB ASSEMBLY (D-SERIES).	OC-1
12	49502	1		FOAM, ACOUSTIC UPPER REAR RH - D CAB	
13	49538	1		SCONSE, BOOMSIDE - MIDDLE/VERT - D CAB	
14	0162612	4		BUTTON, PUSH ON RETAINER	
15	49503	6		BUTTON, PUSH ON RETAINER - GRAY #10 STUD	
16	49549	1		PANEL, UPPER WELDMENT	
17	15604	4		BOLT, 1/4-20 X 3/4”	
18	47914	1		PLATE, DASH - D SERIES	
19	49550	1		FLOORMAT, TRACK MACHINE “D” CAB	
20	57891	1		FIRE EXTINGUISHER - 5 LBS - CAB D	
21	15542	2		BOLT - .375” X .75”	
22	88437	2		.375 WASHER	
23	57892	1		BRACKET, FIRE EXTINGUISHER	

❑ Assembly or Kit - includes all items indented underneath.

OPERATOR CAB ASSEMBLY AND INSTALLATION

INTERIOR TRIM ASSEMBLY AND INSTALLATION

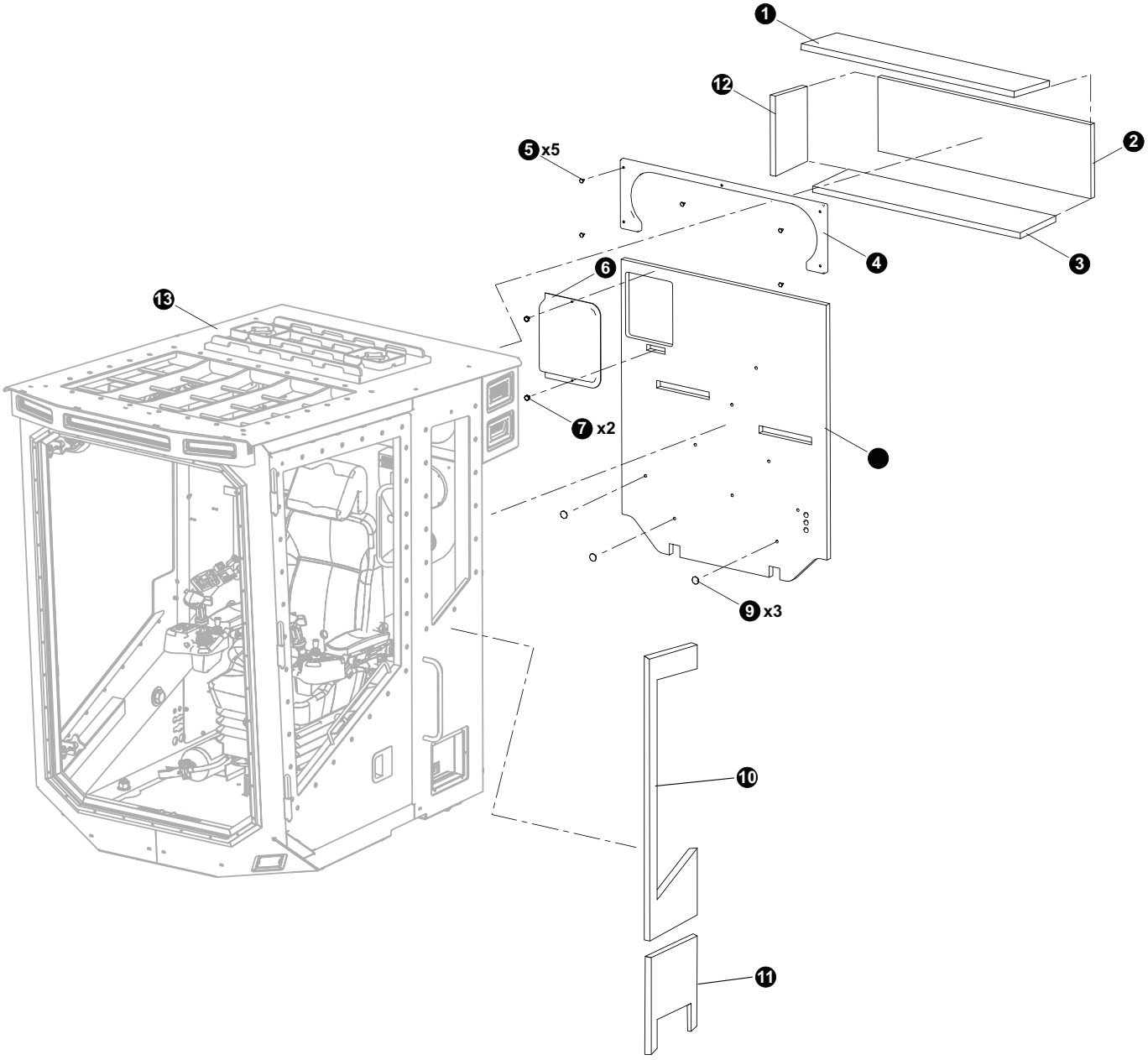

OPERATOR CAB ASSEMBLY AND INSTALLATION

INTERIOR TRIM ASSEMBLY AND INSTALLATION

REF	PART #	QTY		DESCRIPTION	SEE SECTION
-	57813	1	❑	KIT, CAB INSULATION - C SERIES	
1	49547	1		FOAM, ACOUSTIC REAR COMPT CEILING - D	
2	49546	1		FOAM, ACOUSTIC REAR COMPT REAR WALL - D	
3	49545	1		FOAM, ACOUSTIC REAR COMPT FLOOR - D CAB	
4	49544	1		TRIM, REAR COMPARTMENT D-SERIES CAB	
5	49503	5		BUTTON, PUSH ON RETAINER	
6	022718	1		COVER, REAR PANEL	
7	55032	2		KNOB, THUMB SCREW-1/4-20	
8	49504	1		FOAM, ACOUSTIC REAR WALL - D CAB	
9	49503	3		BUTTON, PUSH ON RETAINER - GRAY #10 STUD	
10	49521	1		FOAM, ACOUSTIC OPREA WIN SURROUND - D CA	
11	49506	1		FOAM, ACOUSTIC OPERA WINDOW BOTTOM - D	
12	49505	1		FOAM, ACOUSTIC OPERA SIDE LOWER - D CAB	
13	(Click Here)	1		WELDMENT, CAB ASSEMBLY (D-SERIES).	OC-1

❑ Assembly or Kit - includes all items indented underneath.

OPERATOR CAB ASSEMBLY AND INSTALLATION

BE GE SEAT INSTALLATION

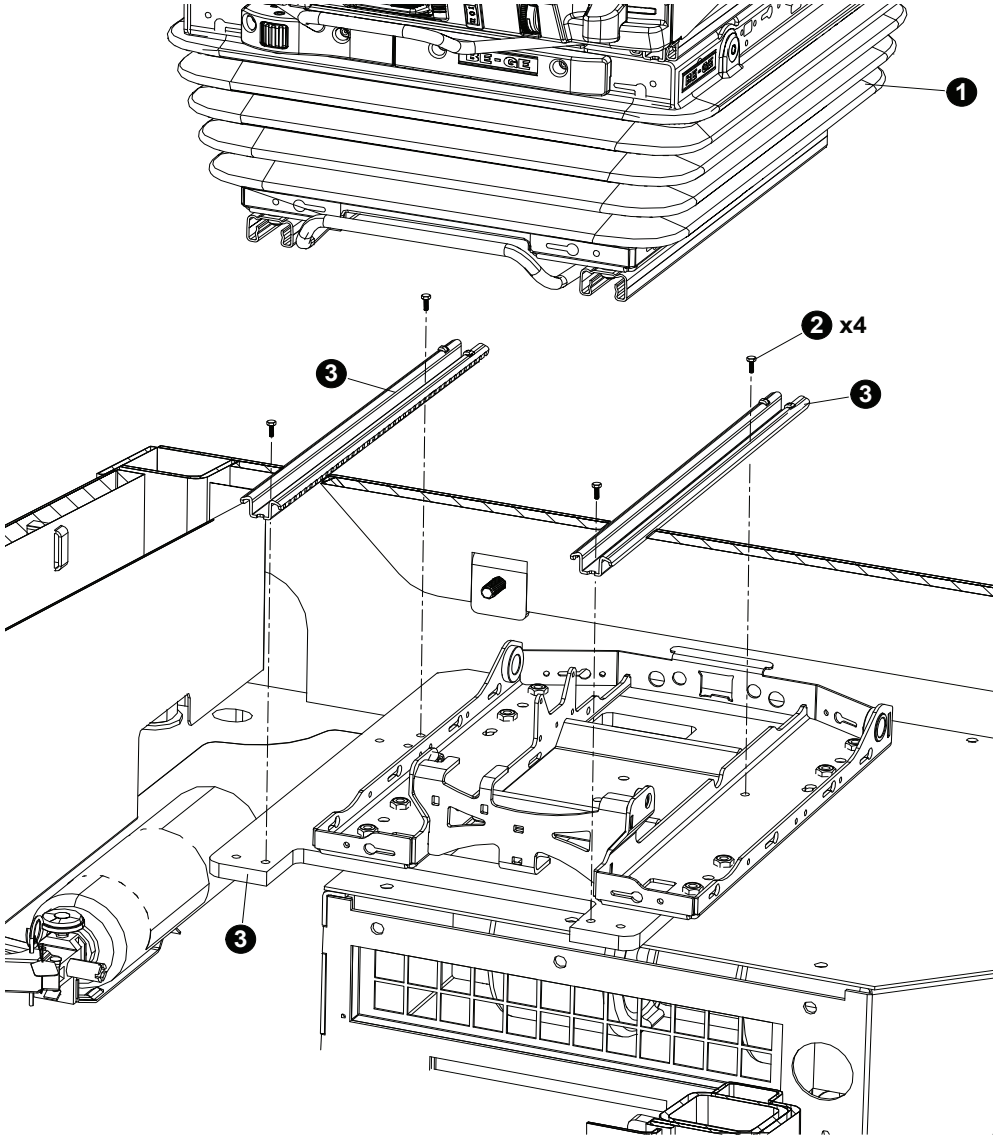

REF	PART #	QTY	DESCRIPTION	SEE SECTION
1	(Click Here)	1	🕮 BE GE OPERATOR'S SEAT.	OC-3
2	53906	4	5/16 x 1/2" CAP SCREW	
3	(Click Here)	1	SEAT LATERAL ADJUSMENT LEVER ASSM.	OC-3
4	(Click Here)	1	🕮 AC / HEATER UNIT ASSEMBLY	OC-4

🕮 See referenced page for component or assembly breakdown.

OPERATOR CAB ASSEMBLY AND INSTALLATION

SEATS INC. SEAT INSTALLATION

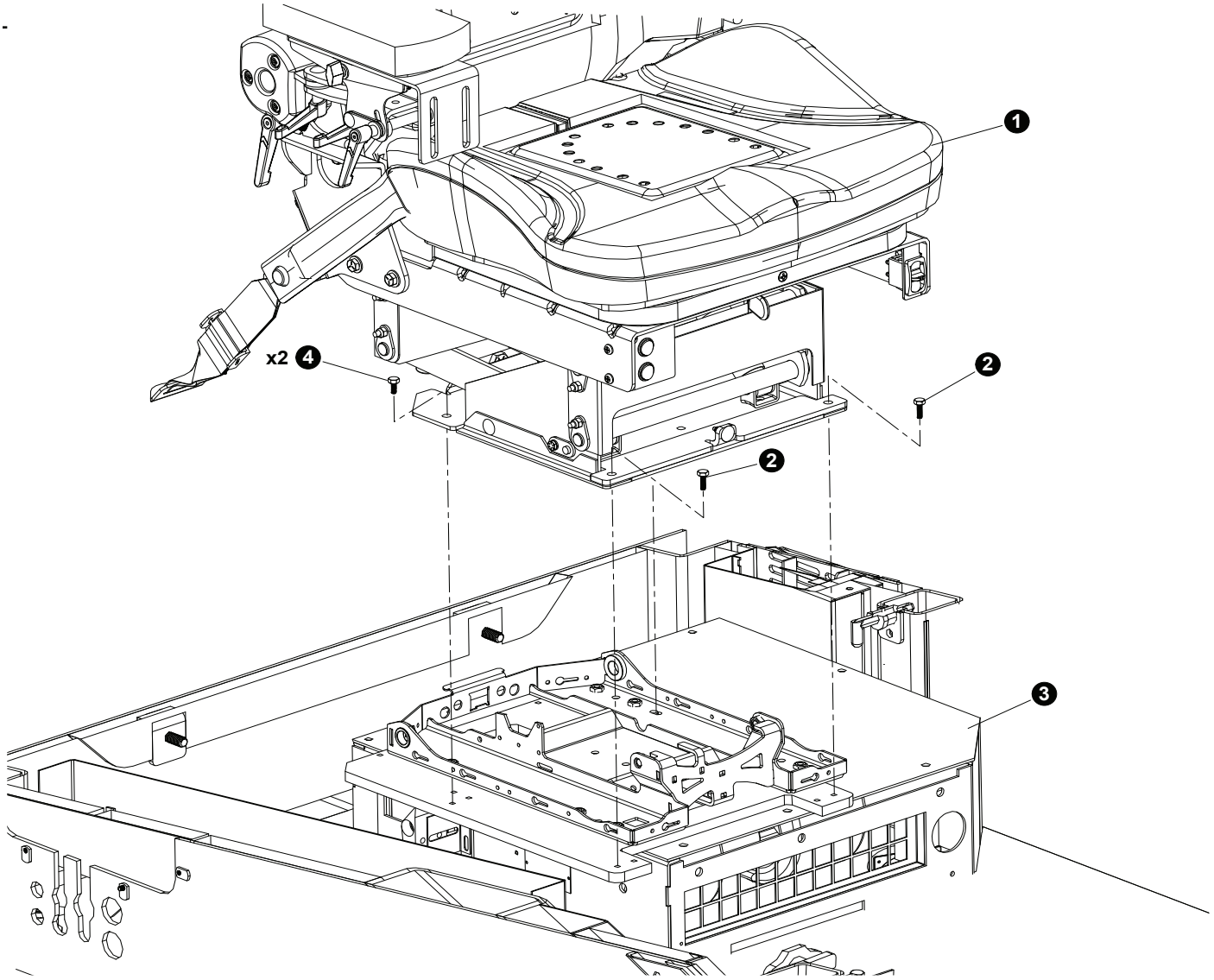

REF	PART #	QTY	DESCRIPTION	SEE SECTION
1	(Click Here)	1	🕮 SEATS INC. OPERATOR'S SEAT	OC-3
2	53906	4	5/16 x 1/2" CAP SCREW	
3	(Click Here)	1	🕮 AC / HEATER UNIT ASSEMBLY	OC-4
4	3520 (Lawson #)	4	5/16 x 3/4" CAP SCREW	

🕮 See referenced page for component or assembly breakdown.

OPERATOR CAB ASSEMBLY AND INSTALLATION

CAB FOOT PEDALS INSTALLATION

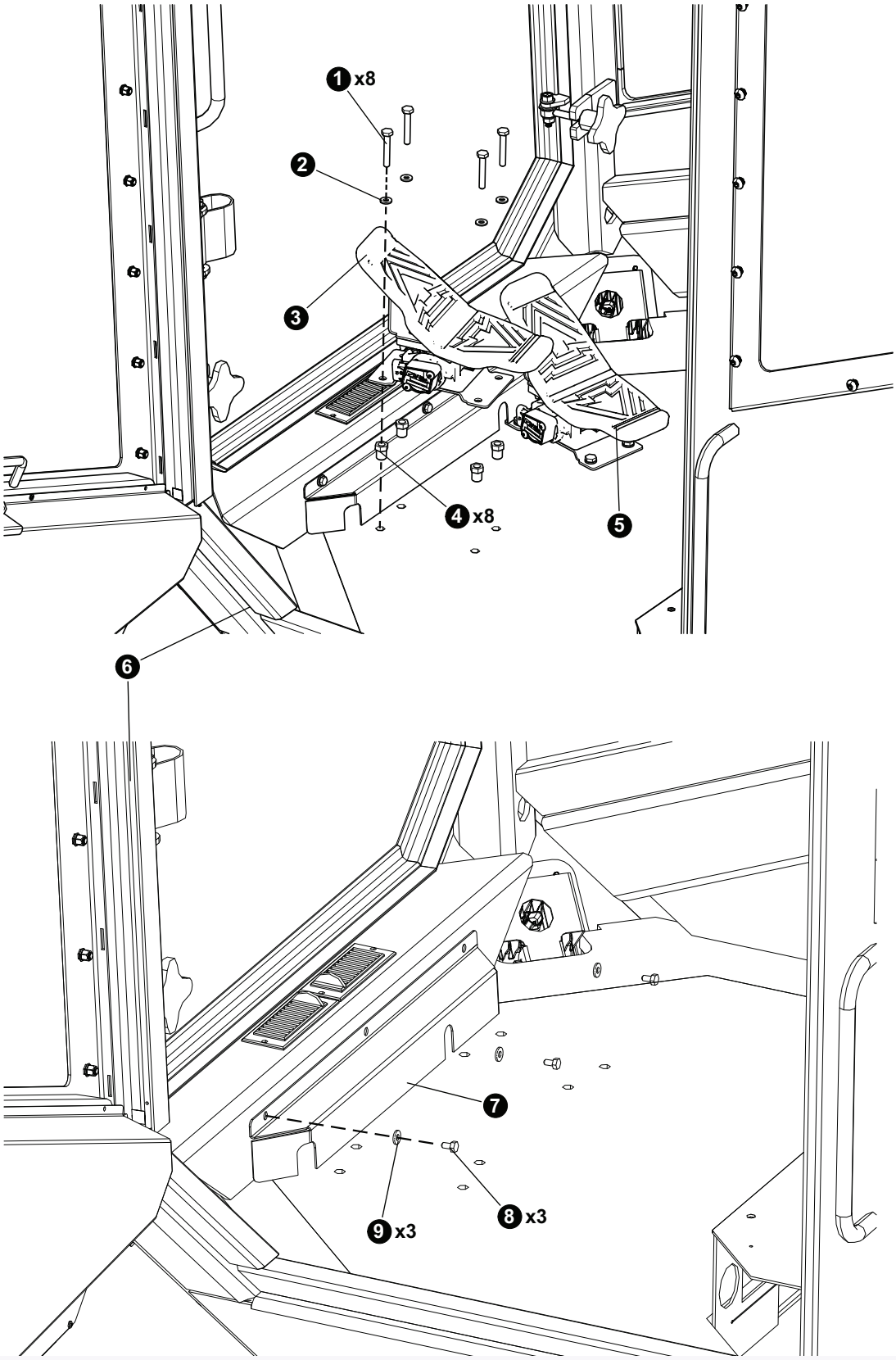

OPERATOR CAB ASSEMBLY AND INSTALLATION

CAB FOOT PEDALS INSTALLATION

REF	PART #	QTY	DESCRIPTION	SEE SECTION
1	10823	8	BOLT - .3125” X 2”	
2	15559	8	WASHER, SAE FLAT - .3125”	
3	57801	1	🕮 PEDAL, BRAKE CONTROL	
4	15574	8	BUSHING, REDUCER - 5406-4-2	
5	57801	1	🕮 PEDAL, FOOT CONTROL (D-series)	
6	(Click Here)	1	🕮 OPERATOR’S CAB	OC-1
7	61002	7	PLATE, PEDAL WIRE - D CAB	
8	23264	7	BOLT - .25” X .5”	
9	10757	4	WASHER, FLAT - .25”	

🕮 See referenced page for component or assembly breakdown.

OPERATOR CAB ASSEMBLY AND INSTALLATION

BE-GE SEATS PARTS AND ASSEMBLY

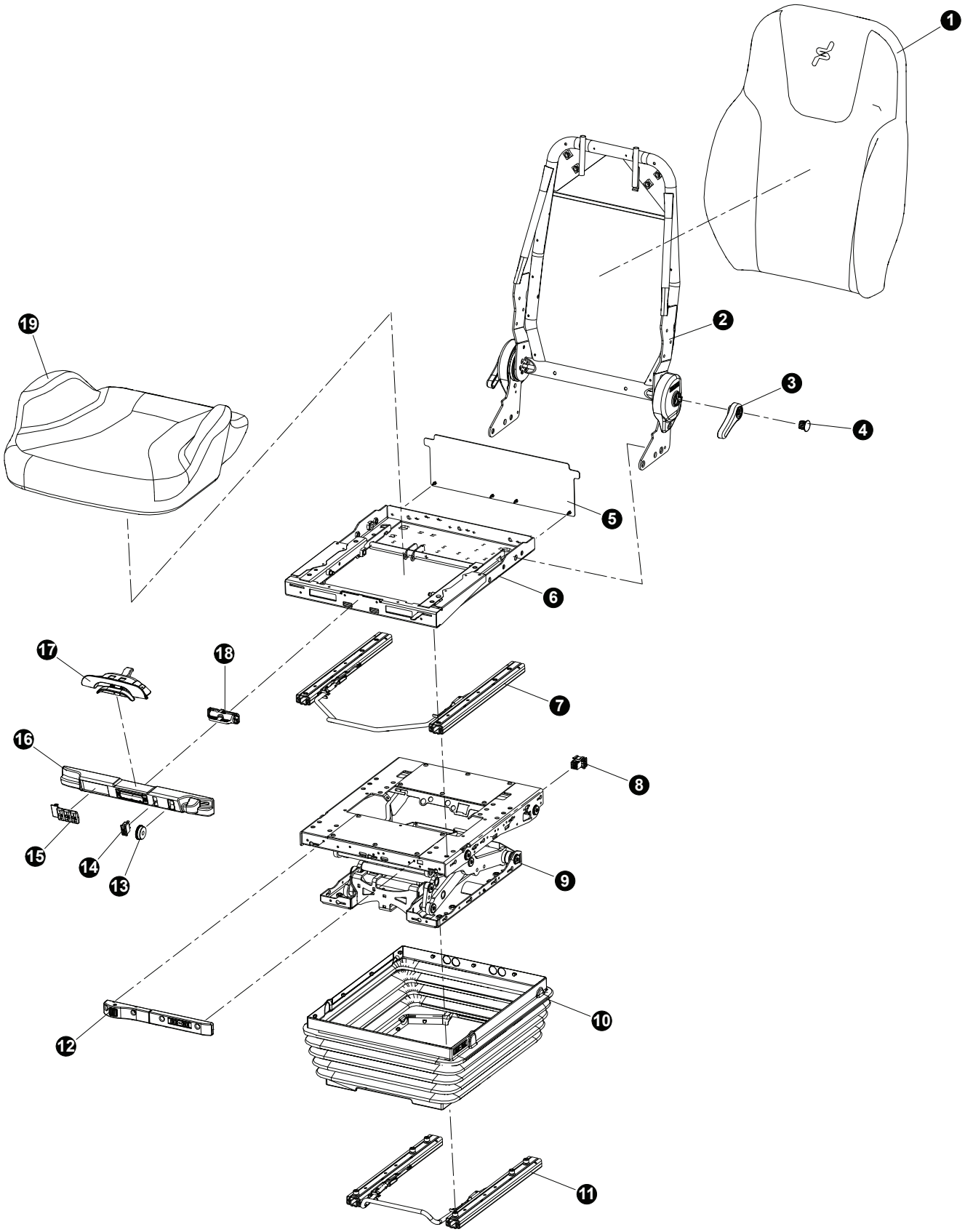

OPERATOR CAB ASSEMBLY AND INSTALLATION

BE-GE SEATS PARTS AND ASSEMBLY

REF	PART #	QTY		DESCRIPTION	SEE SECTION
-	57840	1	❑	SEAT ASSEMBLY, SEATS INC. Heat / Air Ride	
1	632104P	1		SEAT BACK CUSION	
2	632007P	1		UPPER FRAME ASSEMBLY	
3	628833	2		SEAT BACK ADJUSTMENT LEVER	
4	628834	2		LEVER CAP	
5	632080P	1		FRAME BASE BACKER (WITH 4 SCREWS)	
5	632079	1		FRAME BASE BACKER (ONLY)	
6	632004P	1		LOWER FRAME ASSEMBLY	
7	632082P	1		SEAT LATERAL ADJUSMENT LEVER ASSM.	
8	632198P	1		SEAT CONTROLS CIRCUIT BREAKER	
9	632220P	1		FRAME BASE VERTICAL ADJUSMENT LEVER ASSM.	
10	632179P	1		COVER, AIR RIDE	
11	632248P	1		LEVER, OVERALL SEAT/LOWER ASSEMBLY LATERAL ADJUSTMENT	
12	632292P	1		COVER, SHOCK OBSORBER	
13	631931	1		SWITCH, AIR VENT	
14	660590	1		SWITCH, HEAT TEMP. CONTROL	
15	632017P	1		SWITCH, LUMBAR/AIR SIDE-SHOULDER CONTROLS	
16	632005P	1		COVER, SEAT CONTROLS UPPER	
17	631305P	1		SEAT BASE LATERAL ADJUSTMENT	
18	631999	1		SEAT HEIGHT ADJUSTMENT	
19	632100P	1		SEAT BASE CUSHION	

❑ Assembly or Kit - includes all items indented underneath.
📖 See referenced page for component or assembly breakdown.

OPERATOR CAB ASSEMBLY AND INSTALLATION

SEATS INC. PARTS AND ASSEMBLY

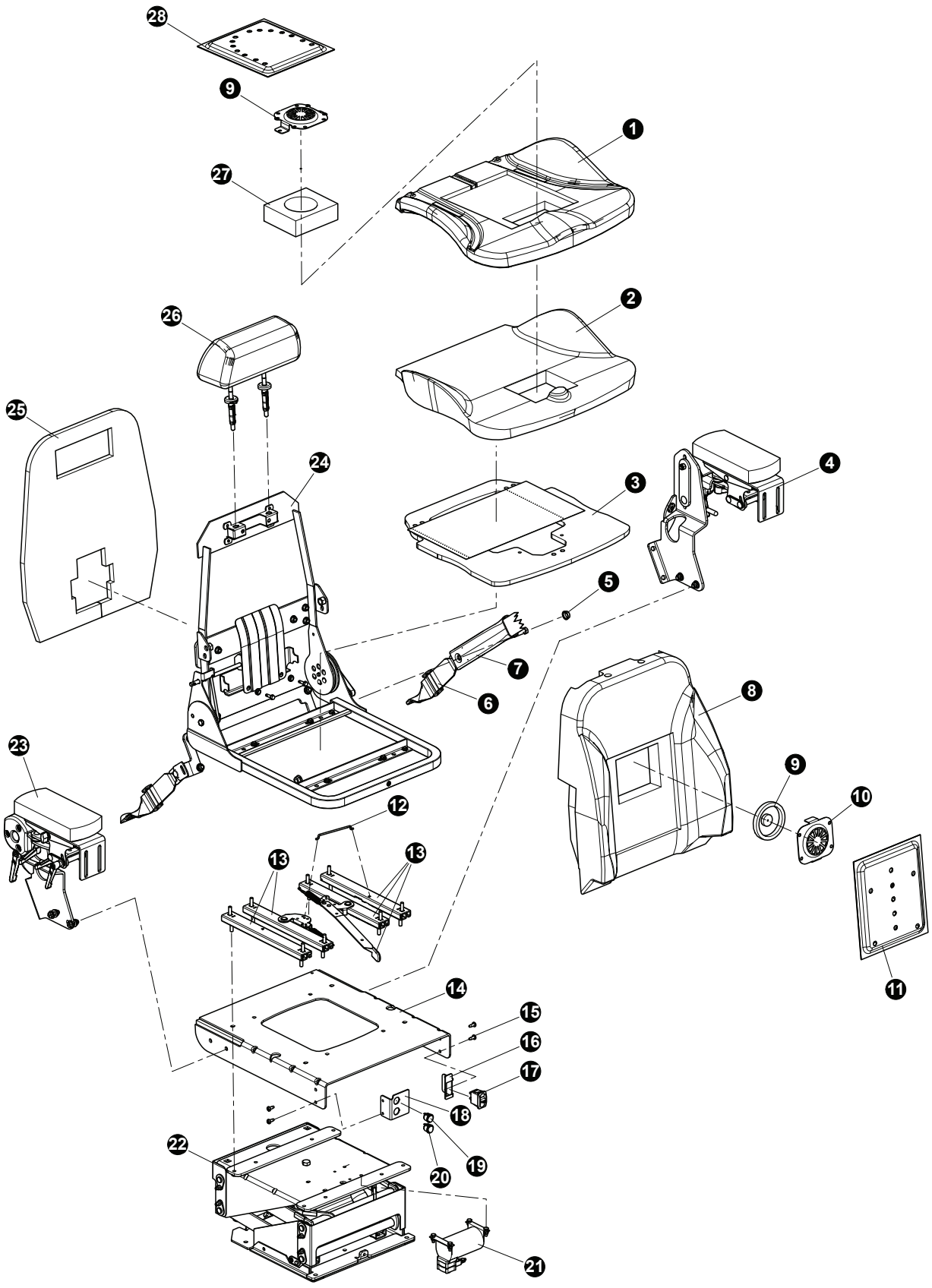

OPERATOR CAB ASSEMBLY AND INSTALLATION

SEATS INC. PARTS AND ASSEMBLY

REF	PART #	QTY		DESCRIPTION	SEE SECTION
-	57723-OC	1		SEAT ASSY - SEAT INC. (HEAT/VENT)	
1	517866-00	1		Cushion, Seat	
2	517865-00	1		Base, Seat	
3	517867-00	1		Seat Bottom	
4	314432-00	1		Armest, LH	
5	708696-00	1		Seatbelt Plug	
6	704876-00	1		Seatbelt Tether Assembly	
7	782938-00	1		Seatbelt	
8	518065	1		Backrest	
9	703836-02	1		Heater	
10	516431-02	1		Seat Base Cover, Fan	
11	312771283283-00	1		Backrest Heater Filter	
12	506856-02	1		Adjustment Pin	
13	109432A	1		Adjustment Bracket Assembly	
14	314422-00	1		Lower Frame Assembly	
15	708490	4		Fastener	
16	512784	4		Bracket	
17	708884	1		Seat Adjustment Switch	
18	518050-00	1		Bracket	
19	782434	1		Heat Vent Switch	
20	782434	1		Vent Speed Switch	
21	109879A-00	1		Compressor Pump	
22	314434	1		Seat Frame Base Adjustment Assembly	
23	314431-00	1		Armest, RH	
24	314433-00	1		Seat Frame	
25	703661-01	1		Backrest Panel	
26	376680-02	1		Headrest	
27	517637-00	1		Seat Backrest Cover, Fan	
28	312765283283-00	1		Seat Base Heater Filter	

❑ Assembly or Kit - includes all items indented underneath.
🕮 See referenced page for component or assembly breakdown.

OPERATOR CAB ASSEMBLY AND INSTALLATION

SEATS INC. SIDE ARM PARTS AND ASSEMBLY

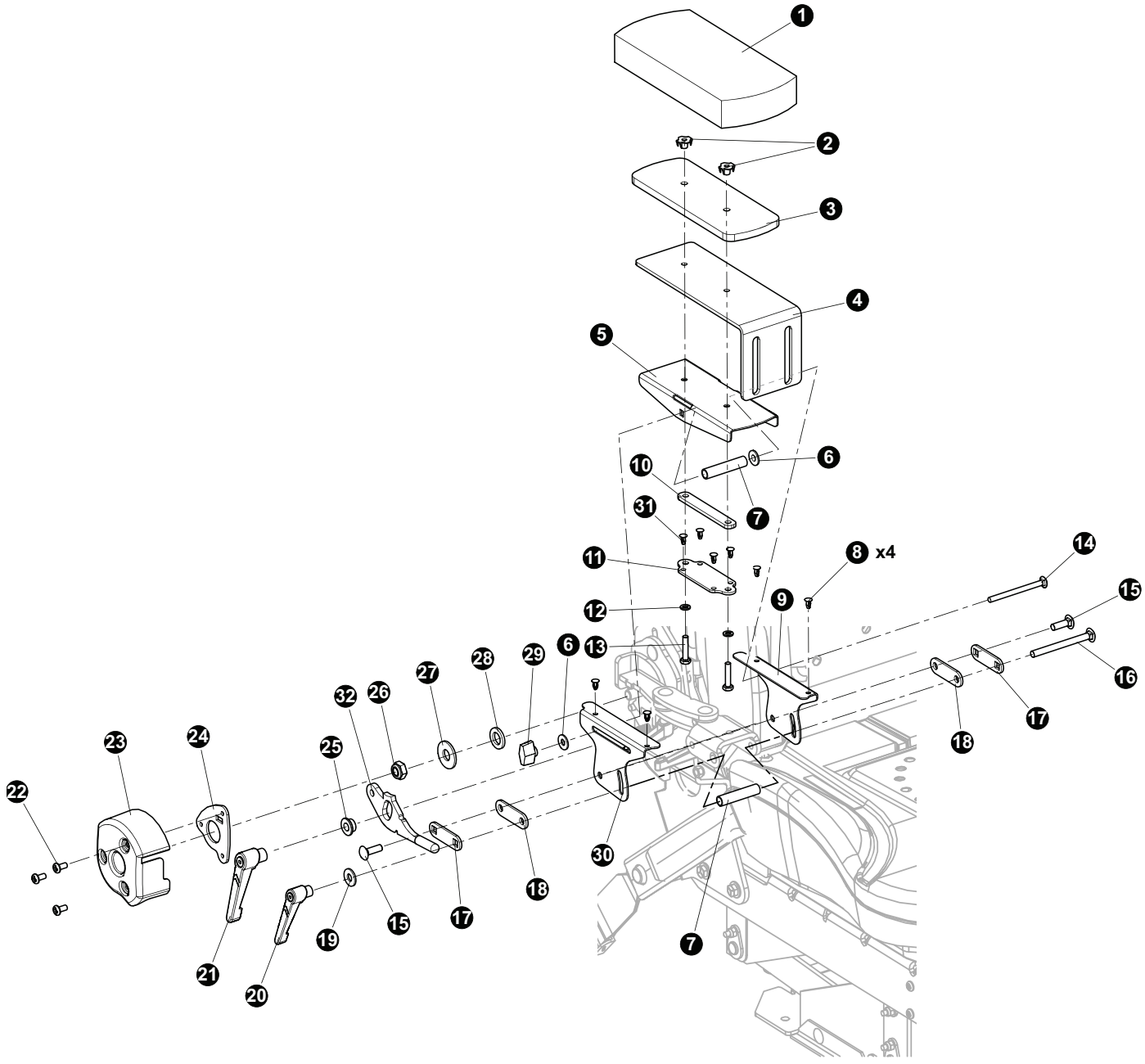

OPERATOR CAB ASSEMBLY AND INSTALLATION

SEATS INC. SIDE ARM PARTS AND ASSEMBLY

REF	PART #	QTY	DESCRIPTION	SEE SECTION
-	314431	1	❑ ARM REST, SITTAB ARMFLEX - RH	
-	314432	1	❑ ARM REST, SITTAB ARMFLEX - LH	
1	703848-01	2	PAD	
2	707029	2	NUT	
3	516610-01	1	PLATE	
4	518072-00	1	COVER	
5	518071-00	1	PLATE	
6	782549	2	WASHER	
7	516609	2	SPACER	
8	782506	4	PLASTIC INSERT	
9	516607	2	BRACKET	
10	516611-00	2	PLATE	
11	516612-00	2	STOP	
12	707085	1	BUSHING	
13	719644	1	BOLT	
14	782503	1	FASTENER	
15	719744	2	MOUNT FASTENER	
16	782501-00	1	FASTENER	
17	516605-01	2	PLATE	
18	782531	2	SPACER	
19	782013	1	BUSHING	
20	782504-00	1	HANDLE	
21	708801	1	HANDLE	
22	782552	1	BOLT	
23	782509-04	1	COVER	
24	314429-00	1	SPACER	
25	511880PL-02	1	BUSHING	
26	707116	1	NUT	
27	782042	1	WASHER	
28	707871	1	WASHER	
29	782505	1	KNOB	
30	516606	1	BRACKET	
31	782506-00	4	FASTENER	
32	517183-02	1	ADJUSTMENT LEVER	

❑ Assembly or Kit - includes all items indented underneath.
📖 See referenced page for component or assembly breakdown.

OPERATOR CAB ASSEMBLY AND INSTALLATION

SEATS INC. SIDE ARM PARTS AND ASSEMBLY

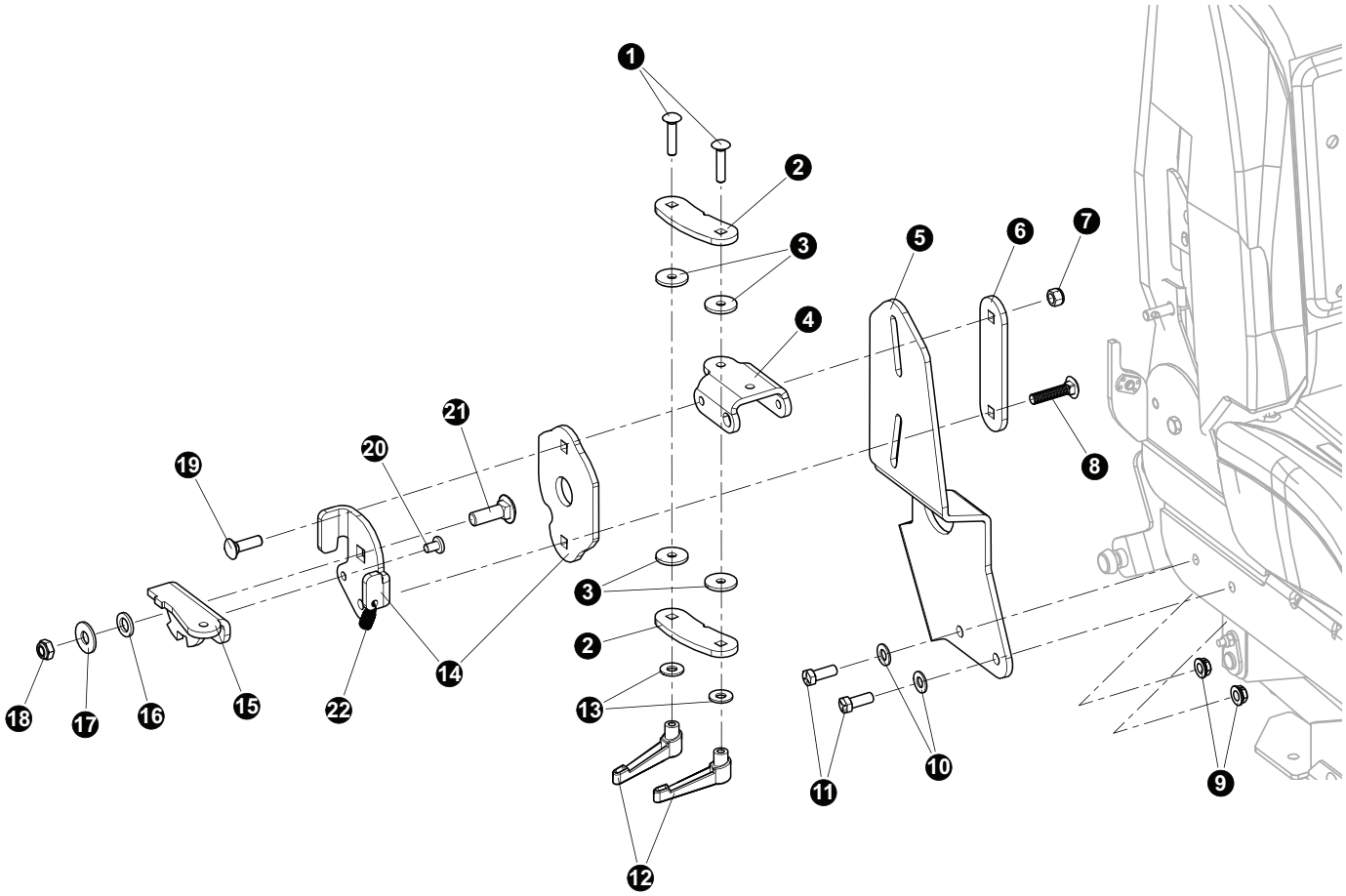

OPERATOR CAB ASSEMBLY AND INSTALLATION

SEATS INC. SIDE ARM PARTS AND ASSEMBLY

REF	PART #	QTY	DESCRIPTION	SEE SECTION
-	314431	1	❑ ARM REST, SITTAB ARMFLEX - RH	
-	314432	1	❑ ARM REST, SITTAB ARMFLEX - LH	
1	719750	2	FASTENER	
2	518075	2	BRACKET	
3	782530-00	4	BUSHING	
4	516603-03	1	BRACKET	
5	518081-00	1	BRACKET	
6	516599-00	2	BRACKET	
7	707251-2	1	NUT	
8	708856-00	8	BOLT	
9	707565	1	NUT	
10	782550	1	WASHER	
11	707195	1	BOLT	
12	782504	2	HANDLE	
13	782013	2	WASHER	
14	314428-00	1	BRACKET	
15	314429-00	2	BRACKET	
16	707871	1	WASHER	
17	782042	1	WASHER	
18	707116	1	NUT	
19	782551	1	BOLT	
20	517182	1	BOLT	
21	782552-00	1	BOLT	
22	708830Aa	1	SPRING	

❑ Assembly or Kit - includes all items indented underneath.
📖 See referenced page for component or assembly breakdown.

PAGE INTENTIONALLY LEFT BLANK

SECTION OC-4
OPERATOR CAB AC-HEATER UNIT ASSEMBLY AND INSTALLATION

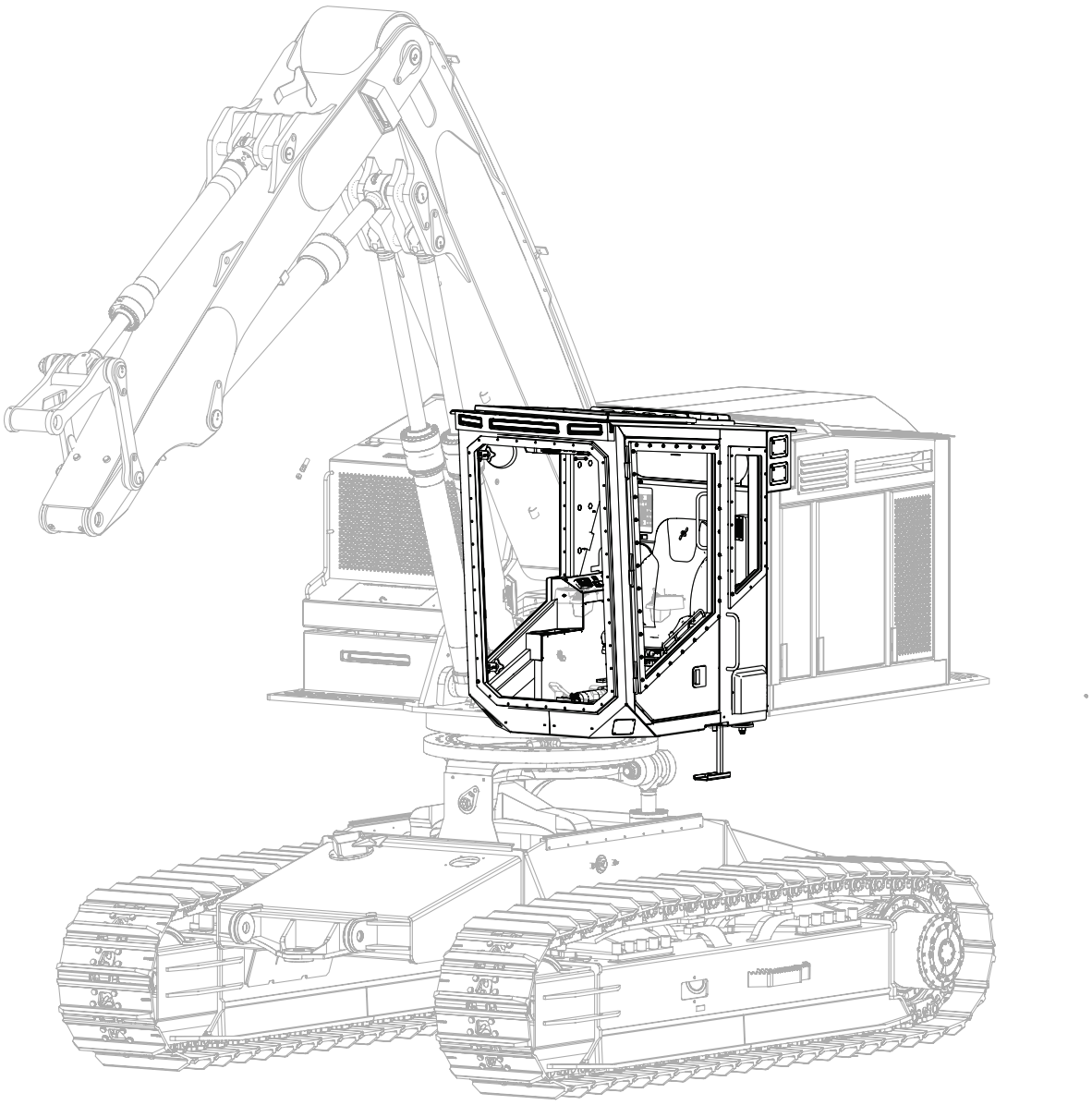

OPERATOR CAB ASSEMBLY AND INSTALLATION

AIR CONDITION/HEATER UNIT ASSEMBLY

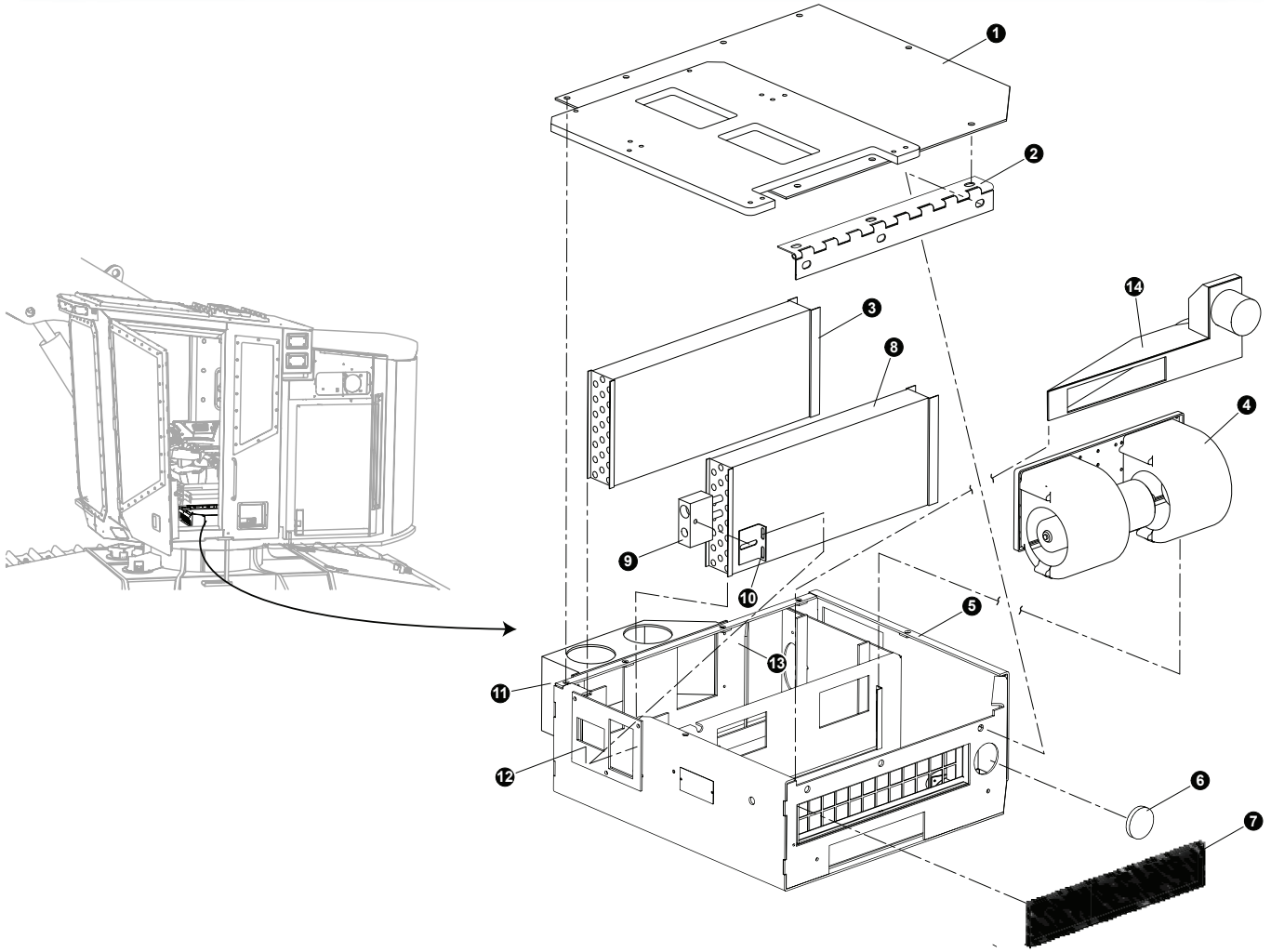

REF	PART #	QTY	DESCRIPTION	SEE SECTION
-	49493-OC	1	❑ KIT, HEATER/AC - D SERIES - LEFT CAB	
1	BA-916-053-25	1	COVER, A/C - Heater and Seat Mount	
2	BA-916-053-28	1	HINGE	
3	BA6-1072	1	HEATER CORE	
4	BA3-5100	1	BLOWER ASSEMBLY - 24V	
5	BA-916-053-0	1	BOX, A/C HEATER	
6	BT2-1059	1	LOUVER	
7	61245-OC	1	RECIRC. FILTER (Supplier # 13081249)	
8	BA6-1071	1	EVAPORATOR CORE	
9	57305-OC	1	EXPANSION VALVE (Supplier # BT1-3111)	
10	BT1-0608	1	EXPANSION VALVE BRACKET	
11	BA8-1051	1	PLENUM REAR	
12	BA-916-053-32	1	BRACKET COIL PLATE	
13	BA8-1053	1	DEFLECTOR	
14	BA8-1050	1	PLENUM FRONT	
	BA1-5124	1	JUMPER HARNESS (NOT SHOWN)	
	RD-5-9216-0-T	1	CAB TEMP SENSOR (NOT SHOWN)	

OPERATOR CAB ASSEMBLY AND INSTALLATION

AIR CONDITION/HEATER UNIT INSTALLATION

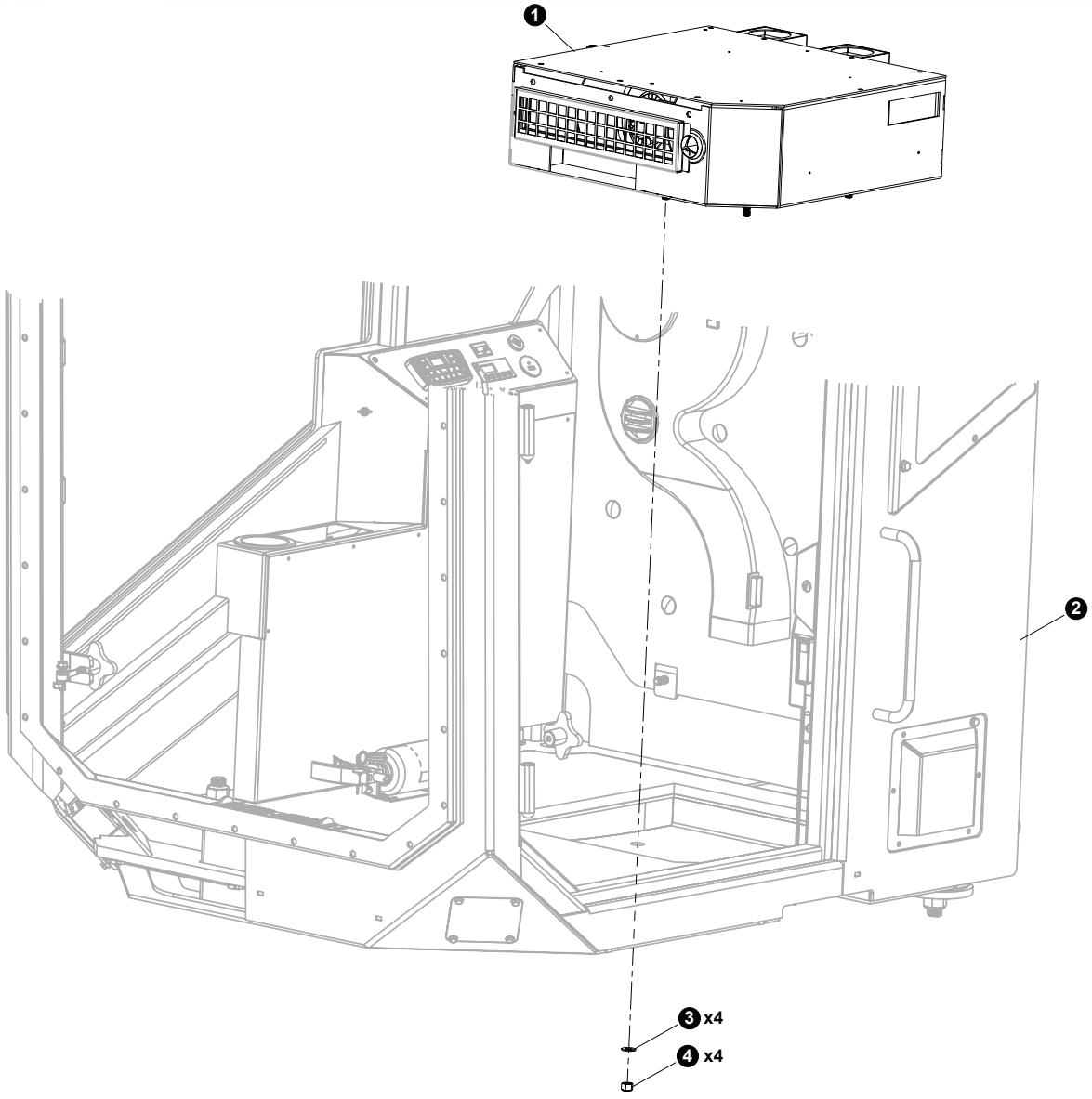

REF	PART #	QTY	DESCRIPTION	SEE SECTION
1	(Click Here)	1	AIR CONDITIONER / HEATER UNIT	OC-4
2	(Click Here)	1	OPERATOR'S CAB ASSEMBLY	OC-1
3	22666-OC	4	WASHER, SAE FLAT - .5" Thick	
4	10815-OC	4	NUT, LOCK - .5"	

❑ Kit or Assembly includes al items Underneath

OPERATOR CAB ASSEMBLY AND INSTALLATION

AIR CONDITION/HEATER UNIT DUCT ASSEMBLY AND INSTALLATION

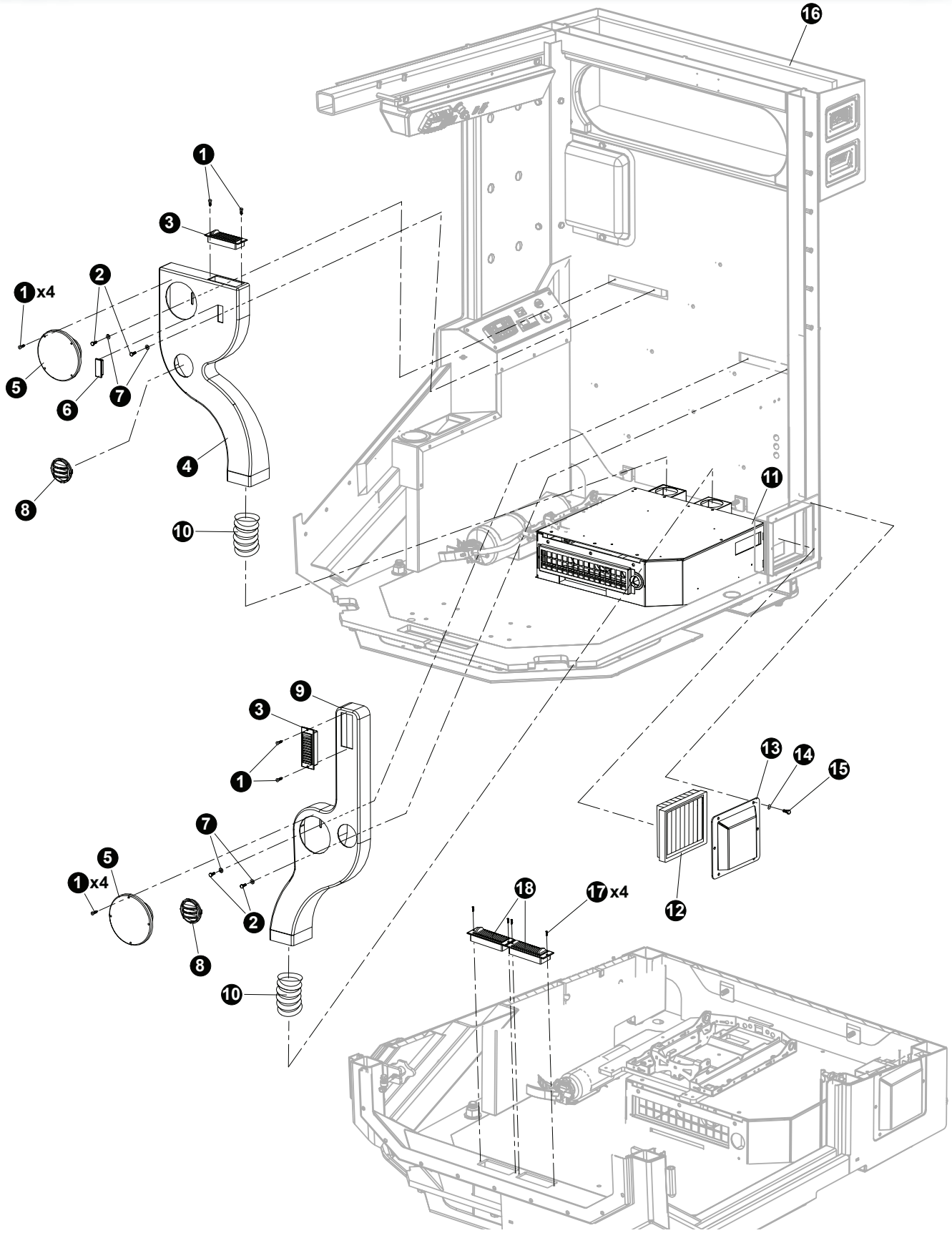

OPERATOR CAB ASSEMBLY AND INSTALLATION

AIR CONDITION/HEATER UNIT DUCT ASSEMBLY AND INSTALLATION

REF	PART #	QTY	DESCRIPTION	SEE SECTION
1	1131350	12	BOLT - .#10 X 3/4” SMS	
2	15604	4	BOLT - .25” X .75”	
3	51640	2	VENT, LOUVER - CAB HEAT (TF830)	
4	49495	1	DUCT, PLASTIC HEATER VENT - D SERIES, RH	
5	57857	2	SPEAKER, CAB - D-SERIES	
6	49500	1	PLUG RECTANGLER TUBE - PLASTIC CAB	
7	10801	4	1/4” WASHER	
8	57817	2	VENT, LOUVER	
9	49494	1	DUCT, PLASTIC HEATER VENT - D SERIES, LH	
10	(See Description)	LF	✂ HOSE, flexible - 6” (78R0300WB)	
11	(Click Here)	1	🕮 AIR CONDITIONER / HEATER UNIT.	OC-4
12	54144	1	FILTER, CAB - PRESSURIZED	
13	61015	1	COVER, AIR FILTER - D CAB	
14	15559	6	WASHER, SAE FLAT - .3125”	
15	15589	6	BOLT - 5/16-18 X 1”	
16	(Click Here)	1	🕮 OPERATOR’S CAB ASSEMBLY	OC-1
17	81465	4	BOLT - 10-24X3/4” UNC 1/8” KEY	
18	51640	2	VENT, LOUVER - CAB HEAT	

✂ Built material - order length rquired in feet or meters.
❑ Kit or Assembly - includes all items indented underneath.
🕮 See referenced page for component or assembly breakdown.

OPERATOR CAB ASSEMBLY AND INSTALLATION

AIR CONDITIONING LINES ASSEMBLY AND INSTALLATION

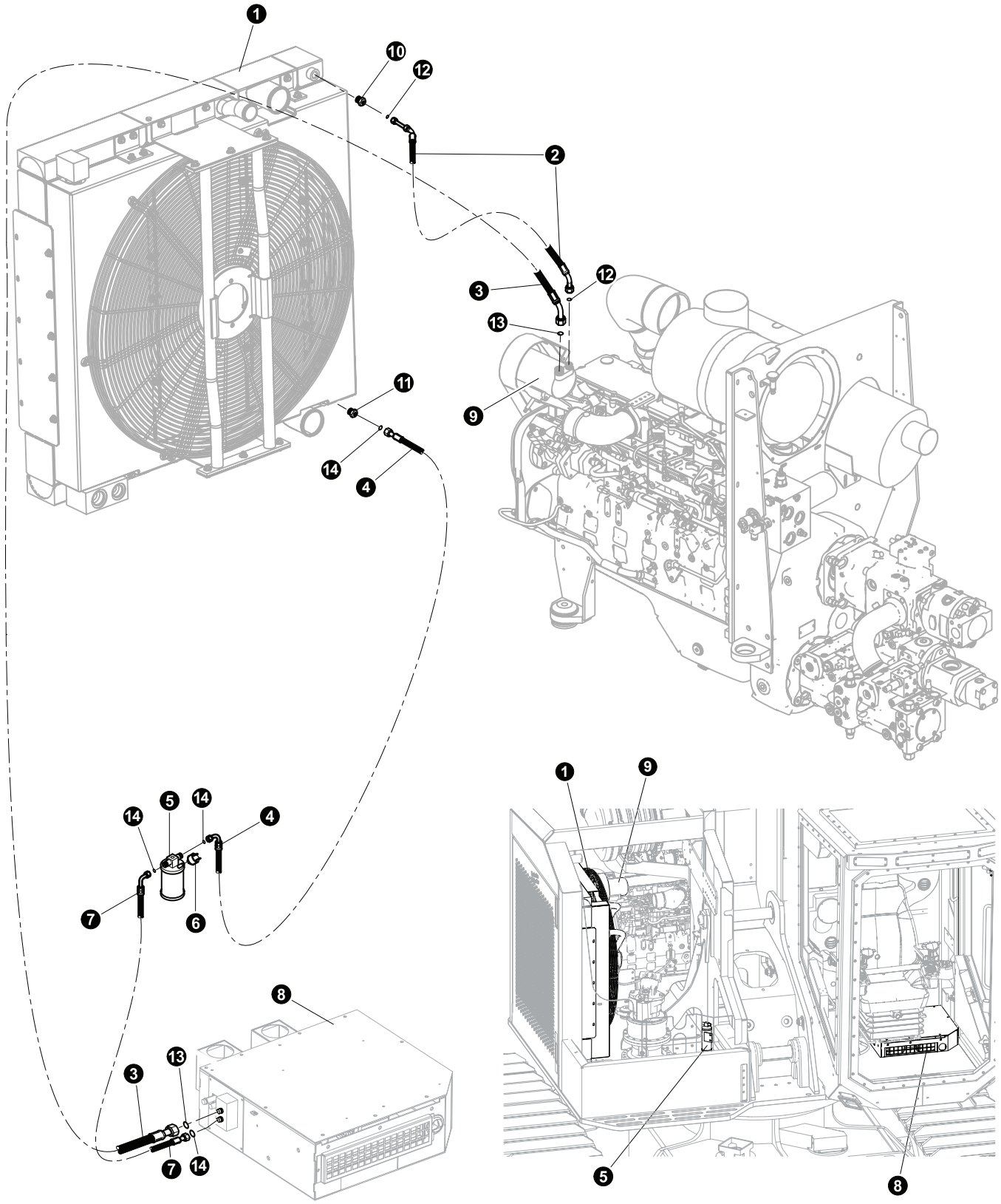

P. ts T3991 1/15
18 '5

OPERATOR CAB ASSEMBLY AND INSTALLATION

AIR CONDITIONING LINES ASSEMBLY AND INSTALLATION

REF	PART #	QTY		DESCRIPTION	SEE SECTION
1	(Click Here)	1	🕮	RADIATOR / AC / OIL COOLER ASSEMBLY.	UP-3
2	BH-314-OC	1		HOSE, air conditioner - #8 x 26.5 ” (Female 45° to Female 45°) (Compressor to Condensor inlet)	
3	BH-449-OC	1		HOSE, #16 SUCTION (90° Male to 45° Female) (AC-Heater Inlet to Compressor Inlet)	
4	BH-458-OC	1		HOSE, #6 COND TO DRIER (#8 Female Str° to #6 Female 90°) (Condensor tubing Outlet to Drier)	
5	50937-OC	1		DRIER, A/C	
6	15040-OC	1		SWITCH, BINARY - BADGER	
7	BH-448-OC	1		HOSE, #6 DRIER TO EX VALVE - #6 x 59 ” (Male 90° to Female 90°) (EXPANSION Valve to Drier)	
16	405862	2		O-RING #06	
8	(Click Here)	1	🕮	AC / HEATER ASSEMBLY	OC-4-1
9	(Click Here)	1	🕮	CUMMINS QSC ENGINE ASSEMBLY.	EE-1
10	BT0-770-OC	1		Fitting 7/8” -14 X #8 ORB	
11	BT0-770-OC	1		Fitting 7/8” -14 X #8 ORB	
12	405863	4		O-RING #08	
13	405864	2		O-RING #16	
14	405862	2		O-RING #06	

🕮 See referenced page for component or assembly breakdown.

OPERATOR CAB ASSEMBLY AND INSTALLATION

HEATER LINES ASSEMBLY AND INSTALLATION

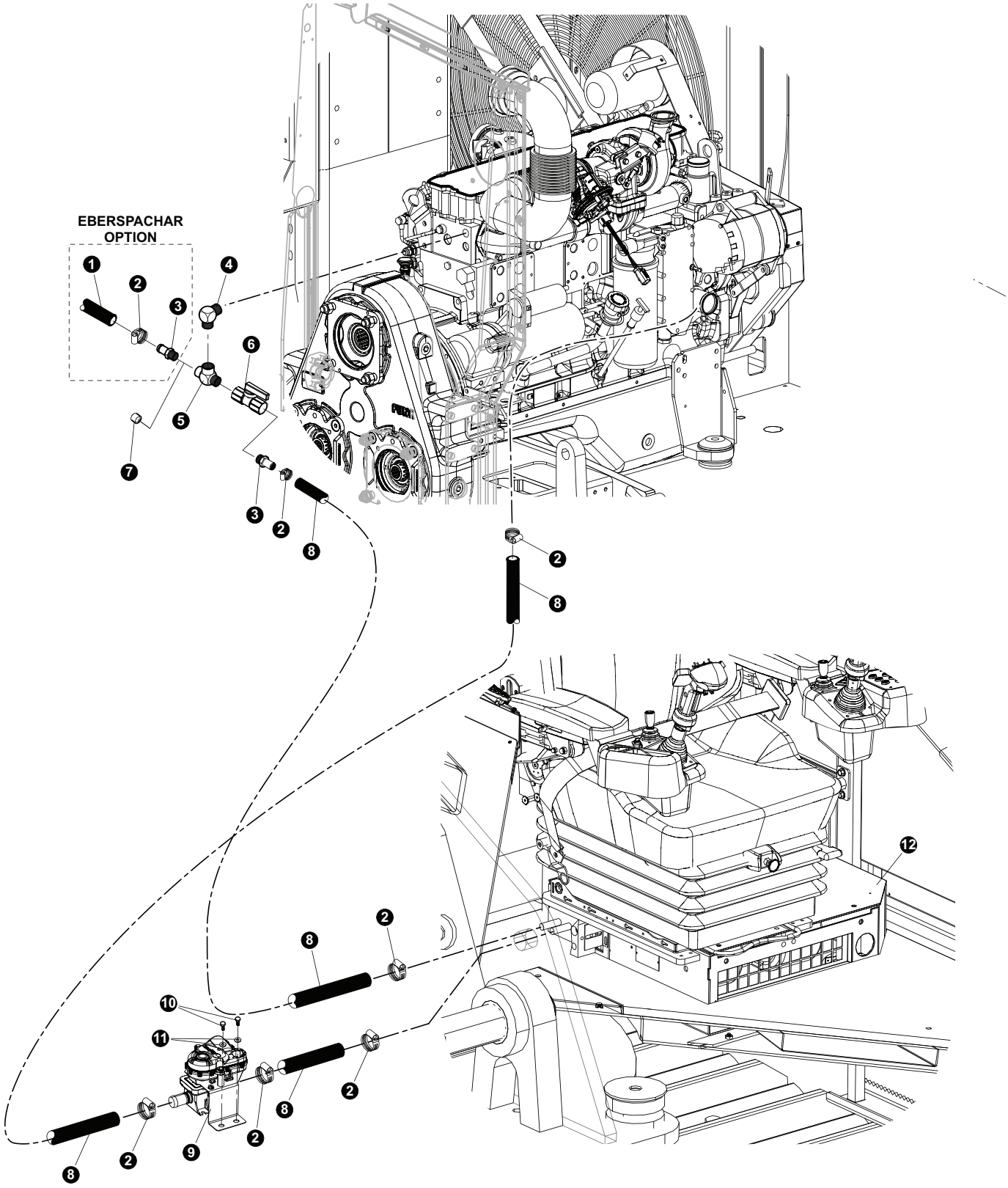

OPERATOR CAB ASSEMBLY AND INSTALLATION

HEATER LINES ASSEMBLY AND INSTALLATION

REF	PART #	QTY	DESCRIPTION	SEE SECTION
1	52035	1	✂ HOSE, ESPAR INSTALLATION	
2	16256-OC	6	CLAMP, HOSE - WORM STYLE - 1”	
3	51774-OC	2	CONNECTOR, STR HOSE BARB - .5 X 5/8	
4	52785-OC	1	ELBOW, MALE PIPE - ¾ X ½ CR-S	
5	51879-OC	1	TEE, RUN - .5” (1/2 MR0-S)	
6	51714-OC	1	VALVE, BALL - WATER SHUT OFF HEATER 1/2”	
7	17488	1	PLUG - 5406-HHP-8	
8	54780	1	✂ HOSE, HEATER - 5/8” X 110” WRAPPED	
9	58069-OC	1	VALVE, WATER KIT	
10	15604	2	BOLT - .25” X .75”	
11	10757-OC	2	1/4” WASHER	
12	(Click Here)	1	🕮 AIR CONDITIONER / HEATER UNIT.	OC-4

✂ Bulk material - order length required in feet or meters.
🕮 See referenced page for component or assembly breakdown.

PAGE INTENTIONALLY LEFT BLANK

SECTION OS-FS-1
LVS 210 FIRE SUPPRESSION SYSTEM ASSEMBLY AND INSTALLATION

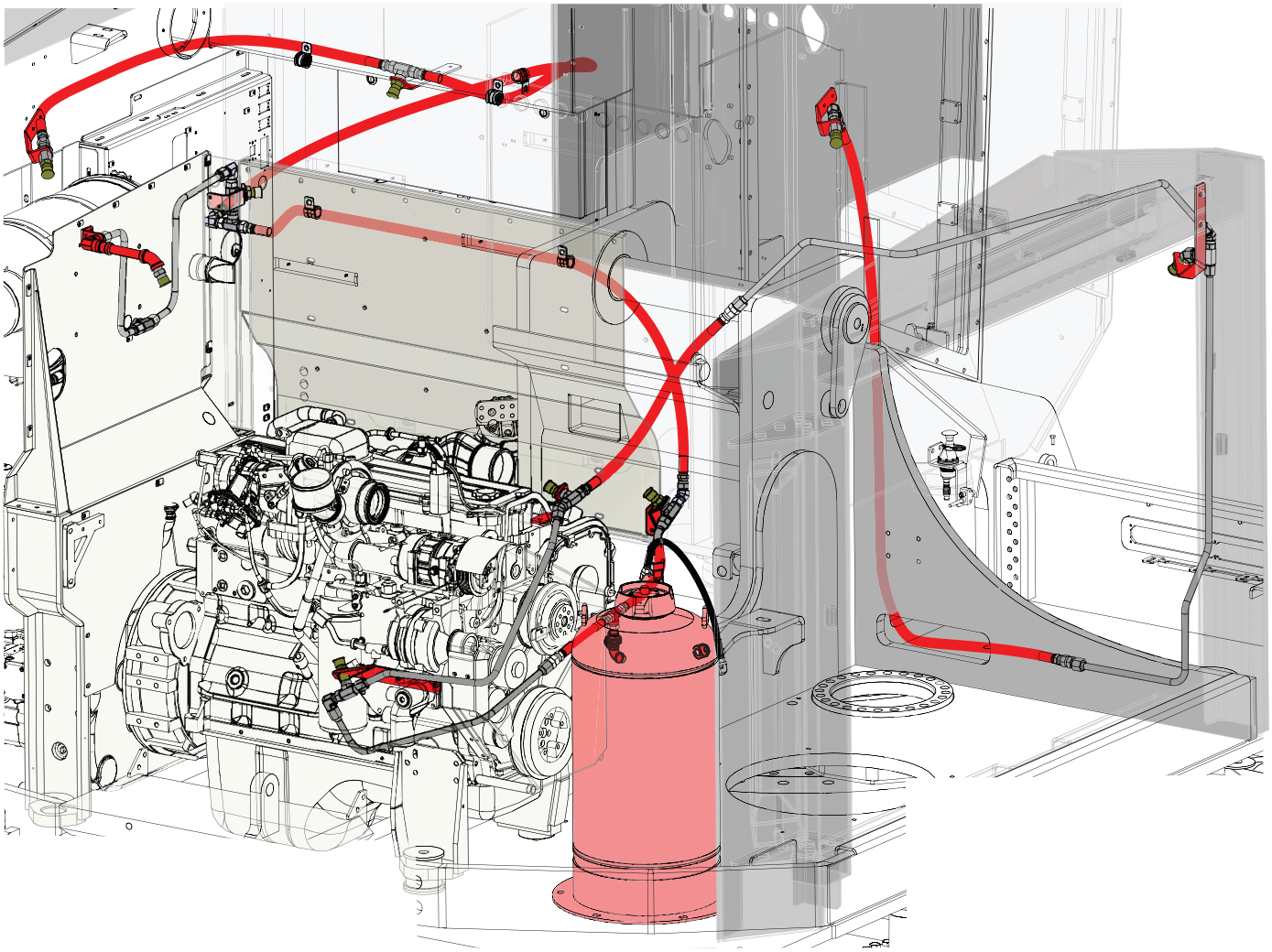

LVS 210 FIRE SUPPRESSION SYSTEM ASSEMBLY AND INSTALLATION

CHEMICAL AGENT SYSTEM - TUBE, FITTING, AND BRACKET LAYOUT

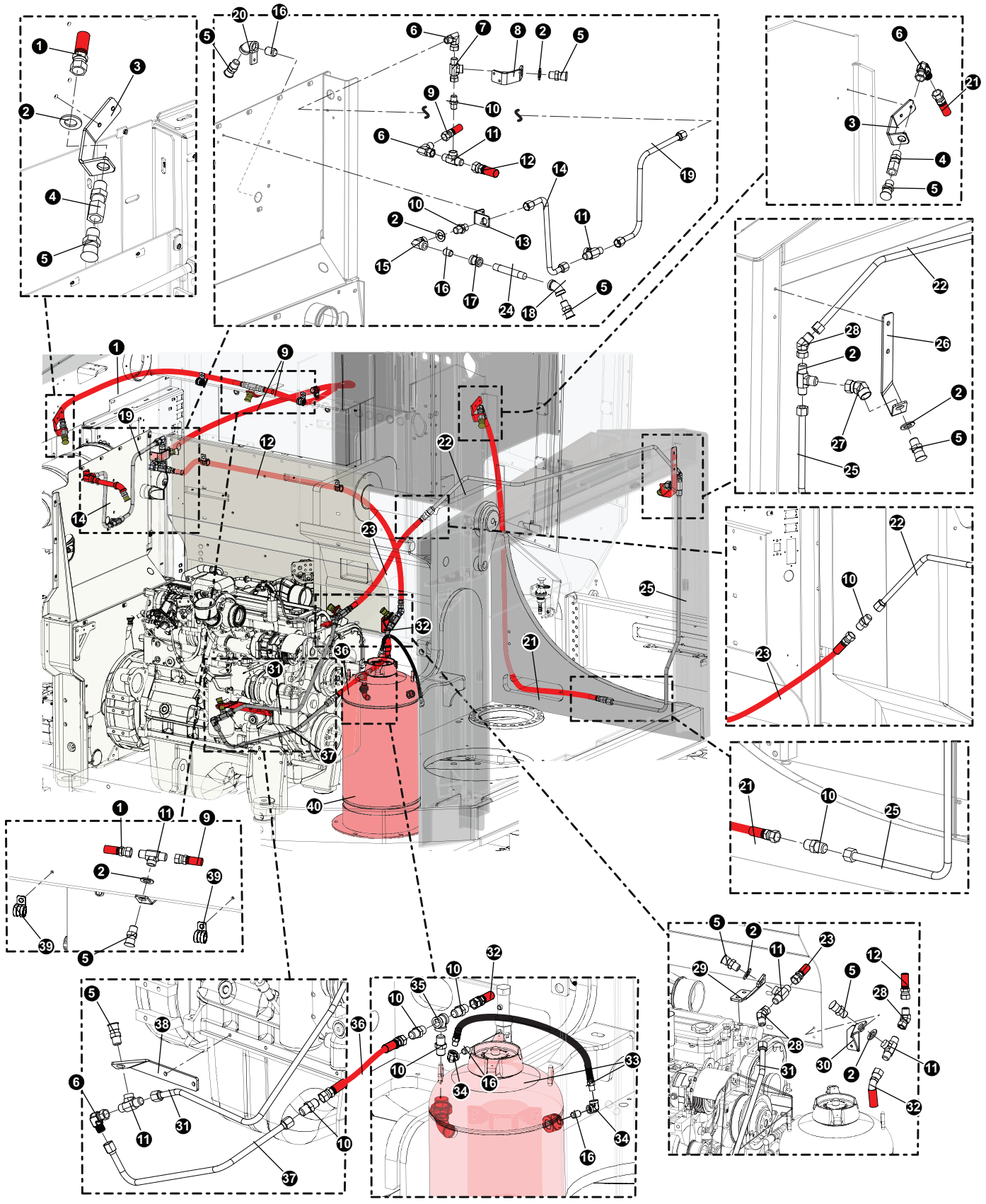

LVS 210 FIRE SUPPRESSION SYSTEM ASSEMBLY AND INSTALLATION

CHEMICAL AGENT SYSTEM - TUBE, FITTING, AND BRACKET LAYOUT

Item #	Part #	Qty.	Description
1	58978 (Kit#)	1	Hose, **421FS 48 08-10JS-10JS**
2	42110	9	WASHER, FLAT - 20MM
3	48617	1	BRACKET, FIRE SUPPRESSION - PUMPS
4	55357	1	FITTING, 10 WGTX-WLN-S
5	433325	10	LVS 9.5 NOZZLE W/ BLOW OFF CAP (**VAN'S PART #**)
6	55387	7	FITTING, SWIVEL - 10 C6X-S
7	51879	1	TEE, RUN - .5" (1/2 MR0-S)
8	62085	1	BRACKET, FIRE SUPP NOZZLE
9	58978 (Kit#)	1	Hose, **421FS 70 08-10JS-10JS**
10	57382	7	FITTING, 10 FTX-S
11	55424	8	FITTING, FEMALE BRANCH TEE
12	(See Description)	1	Hose, **421FS 60 08-10JS-10JS**
13	60464	1	BRACKET, FIRE SUPPRESSION - BELT SHROUND
14	60461	1	TUBE, FIRE WALL REAR - D-SERIES
15	17370	3	ELBOW, 90 DEG 1/2 X 1/2 FEMALE
16	16126	4	NIPPLE, CLOSE - 1/2"
17	58018	1	COUPLING, PIPE - 1/2" MERCHANT GALVANIZED
18	58017	2	ELBOW, PIPE - 1/2" 45 DEGREE GALVANIZED
19	60460	1	TUBE, FIRE WALL FRONT - D-SERIES
20	53595	1	MANIFOLD, FIRE SUPP. 45 DEGREE ELBOW
21	58978	1	Hose, **421FS 50 08-10JS-10JS**
22	58987	1	TUBELINE, FIRE SUPP. - RADIATOR TOP
23	58978 (Kit#)	1	Hose, **421FS 29 08-10JS-10JS**
24	58015	1	NIPPLE, PIPE - 1/2" x 5" GALVANIZED
25	58986	1	TUBELINE, FIRE SUPP - RAD FILLER PANEL
26	48621	1	BRACKET, FIRE SUPPRESSION ROTARY MANIFOLD
27	51911		ELBOW, STREET 45 .5" - FIRE SUPPRESION
28	15241	1	ELBOW, 45 SWIVEL - 6502-10
29	60827	1	BRACKET, FIRE SUPPRESSION - BELT
30	47415	1	BRACKET, FIRE SUPPRESSION-PUMPS
31	58988	1	TUBELINE, FIRE SUPP - ALTER. TO CYL HEAD
32	(See Description)	1	Hose, **421FS 15 08-10JS-10J4**
33	438775	1	15 GAL Wet Chemical Tank w/ Mounted Nitrogen Tank and Hose
34	17370	3	ELBOW, 90 DEG 1/2 X 1/2 FEMALE
35	55377	1	TEE, FIRE SUPPRESSION - 3/4" NPT
36	(See Description)	1	Hose, **421FS 15 08-10JS-10JS**
37	58989	1	TUBELINE, FIRE SUPP - ALTER TO LVS TANK
38	60826	1	BRACKET, FIRE SUPPRESSION - ENGINE
39	16119	2	CLAMP, HOSE - COATED STRAP - 1"

LVS 210 FIRE SUPPRESSION SYSTEM ASSEMBLY AND INSTALLATION

CHEMICAL AGENT SYSTEM - TUBE, FITTING, AND BRACKET LAYOUT

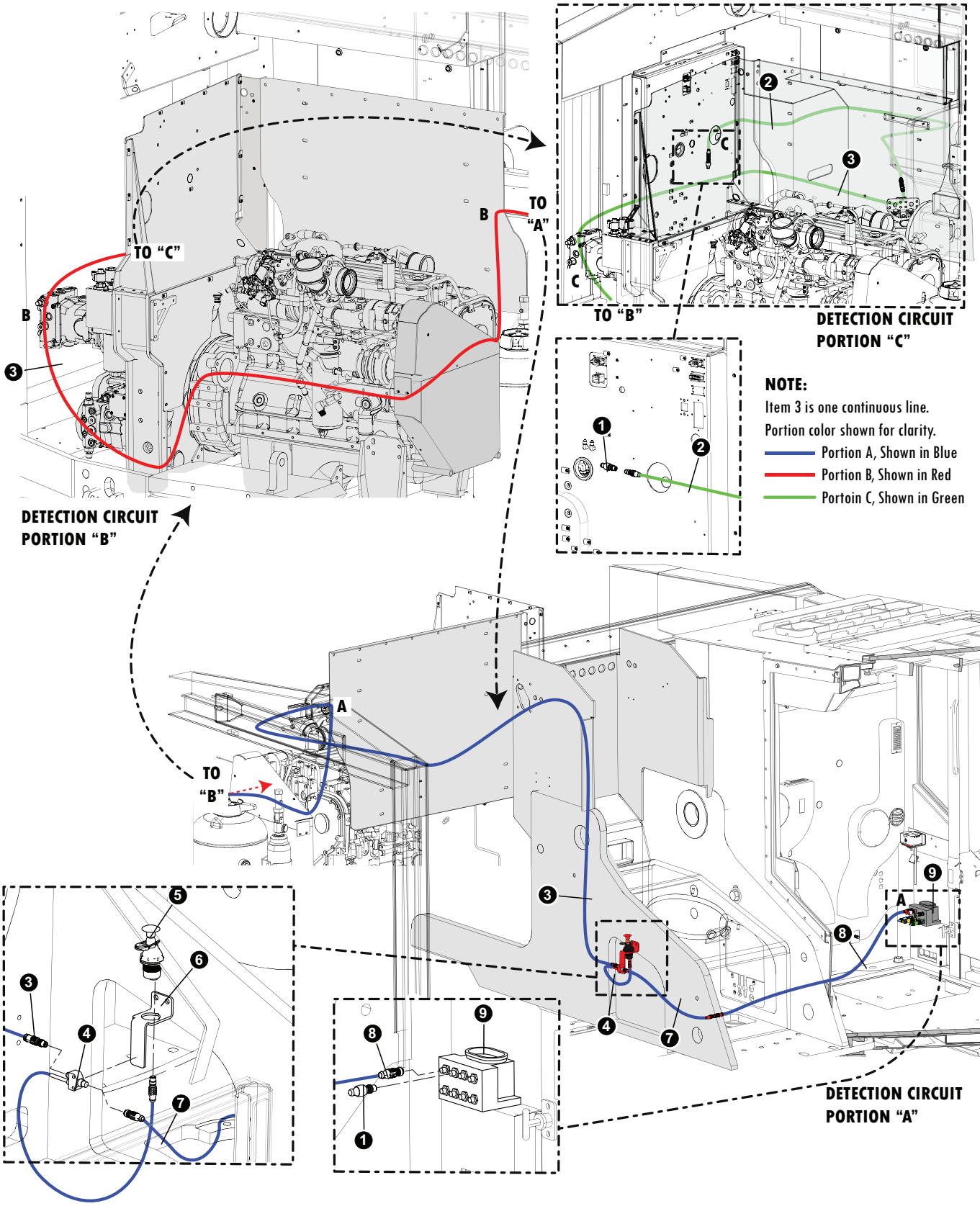

LVS 210 FIRE SUPPRESSION SYSTEM ASSEMBLY AND INSTALLATION

EMISSION SYSTEM - CONTROL MODULE AND CABLE LAYOUT

Item #	Part #	Qty.	Description
1	(See Description)	1	Detection Circuit, End of Line (EOL) Connector (**Supplier #439396**)
2	(See Description)	1	10' Detection Circuit Cable (**Supplier #439480**)
3	(See Description)	1	30' Detection Circuit Cable (**Supplier #439410**)
4	(See Description)	1	Y Connector (**Supplier #440152**)
5	(See Description)	1	Electric Manual Acturator Ship Assy. (**Supplier #439400**)
6	(See Description)	1	EMA Bracket (**Supplier #440537**)
7	(See Description)	1	Detection Circuit Cable-2' Cable (**Supplier #439384**)
8	(See Description)	1	Detection Circuit Cable-5' Cable (**Supplier #439386**)
9	(See Description)	1	210 Control Module and Mounting Bracket (**Supplier #439561**)

LVS 210 FIRE SUPPRESSION SYSTEM ASSEMBLY AND INSTALLATION

EMISSION SYSTEM - CONTROL MODULE AND CABLE LAYOUT

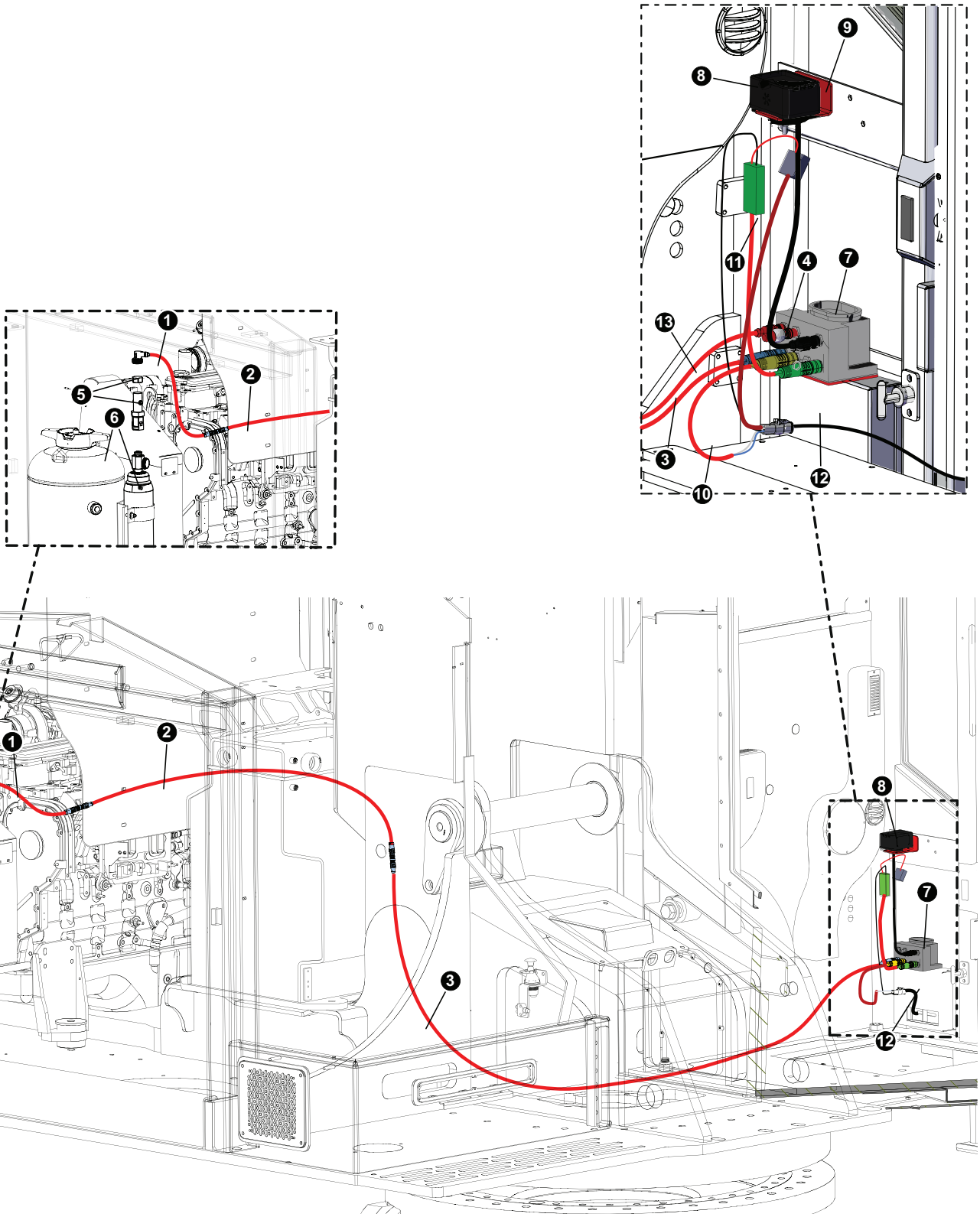

LVS 210 FIRE SUPPRESSION SYSTEM ASSEMBLY AND INSTALLATION

EMISSION SYSTEM - CONTROL MODULE AND CABLE LAYOUT

Item #	Part #	Qty.	Description
1	439430	1	Release Drop Cable-30" Cable Assy.
2	439420	1	Release Circuit-5' Cable
3	439422	1	Release Circuit-10' Cable Assy.
4	439396	1	Detection Circuit, End of Line (EOL) Connector
5	439569	1	Nozzle, EPA
6	438775	1	15 GAL Wet Chemical Tank w/ Mounted Nitrogen Tank
7	439561	1	210 Control Module and Mounting Bracket
8	439417	1	Checkfire-210 Control Module
9	46975	1	PLATE, CHECKFIRE BOX MTG
10	439466	1	Relay Circuit Cable
11	439422	1	Fused Power Circuit Cable
12	57736	1	Fire Suppression Harness
13			(See Previous Page for Cable)

PAGE INTENTIONALLY LEFT BLANK

Section OS-OH-1

Optional Heaters-
Espar Heater Installation

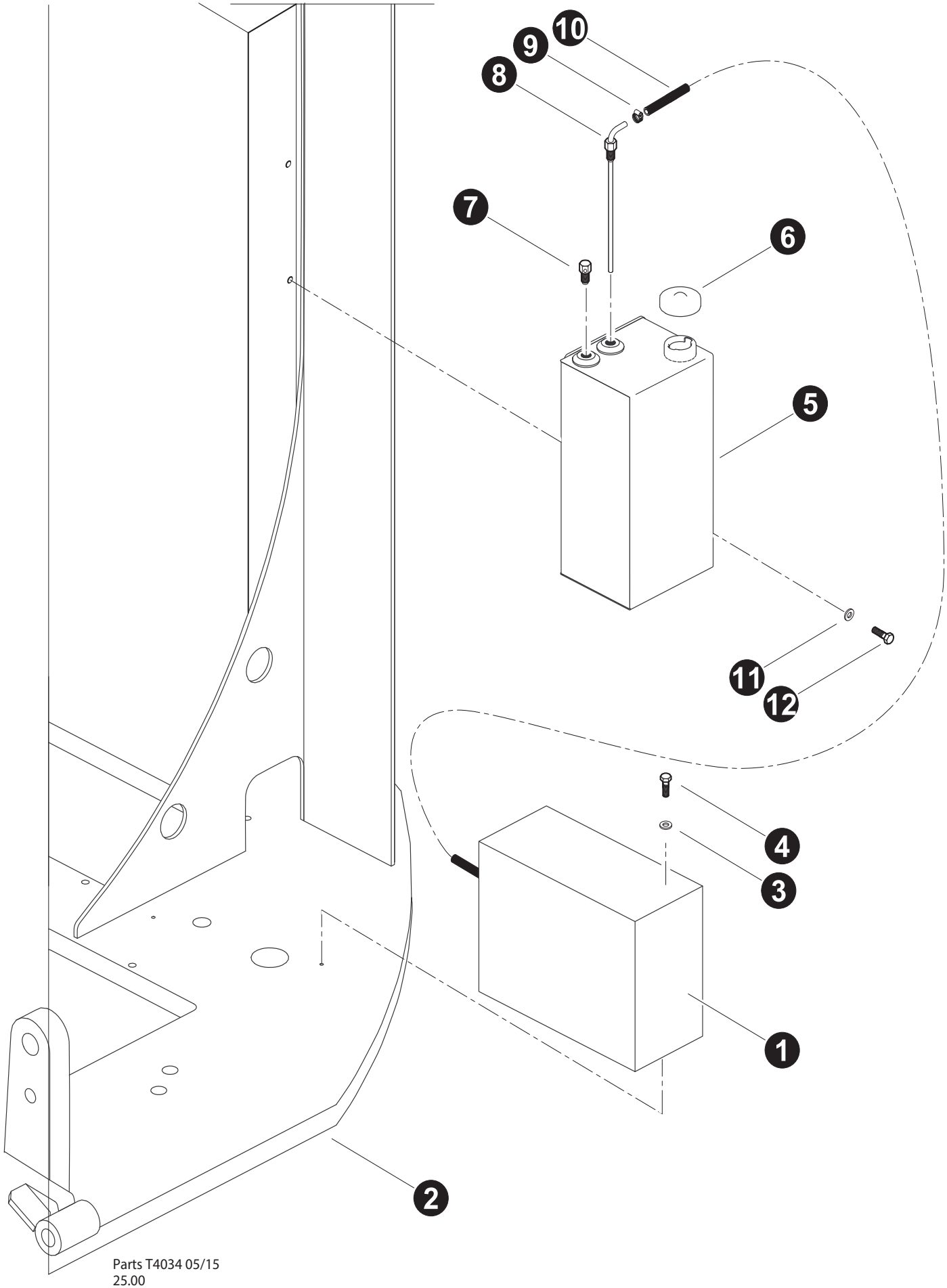

Parts T4034 05/15
25.00

Espar Heater
(Heater Installation)

REF	PART #	QTY		DESCRIPTION
1	REF	1	🕮	ESPAR PRE-HEATER SYSTEM OH-2
2	REF	1	🕮	UPPER TURNTABLE UP-1
3	10757-OH	2		WASHER, SAE FLAT - .25”
4	15604-OH	2		BOLT - .25” X .75”
5	46673-OH	1		TANK, ESPAR FUEL - C SERIES
6	52965-OH	1		CAP, ESPAR FUEL TANK
7	22906-OH	1		BEATHER, fuel vent
8	-OH	1		SUCTION TUBE, ESPAR FUEL TANK
9	10759-OH	1		CLAMP, HOSE - WORM STYLE - .875”
10	-OH			HOSE, ESPAR

❑ Kit or Assembly - includes all items indented underneath.
🕮 See referenced page for component or assembly breakdown.

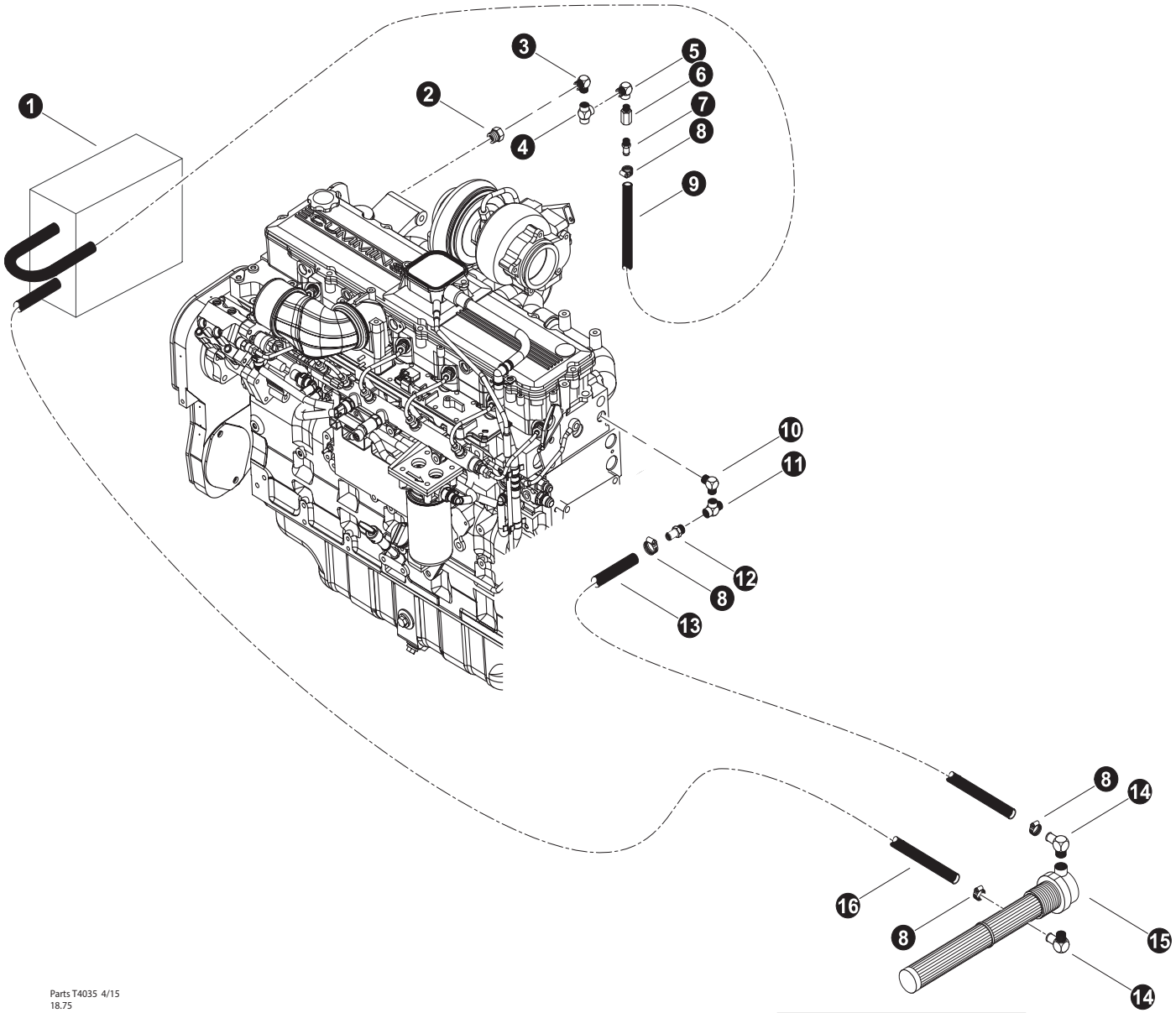

Parts T4035 4/15
18.75

Heat Element is Treaded into rear of the hydraulic tank.

Espar Heater
(Heater Installation)
Cummins QSC 8.3L

REF	PART #	QTY		DESCRIPTION
1	REF	1	🕮	ESPAR PRE-HEATER SYSTEM OH-2
2	15513-OH	1		BUSHING, REDUCER - 5406-12-8
3	52785-OH	1		ELBOW, MALE PIPE - ¾ X ½ CR-S
4	16125-OH	1		TEE, BLACK - .5”
5	52786-OH	2		ELBOW, 1/2” X 3/8” CD-S
6	15652-OH	2		VALVE, CHECK
7	51502-OH	1		NIPPLE, KING - .38NPT X .63 HOSE
8	16256-OH	8		CLAMP, hose - worm style - 7/8”
9	52035-OH	33”	✂	HOSE, HEATER - (BULK ROLL) .625” X 250’
10	52785-OH	1		ELBOW, MALE PIPE - ¾ X ½ CR-S
11	51879-OH	1		TEE, RUN - .5” (1/2 MR0-S)
12	51774-OH	1		NIPPLE, KING - 1/2” NPT X 5/8” HOSE
13	16717-OH	33”	✂	HOSE, HEATER - (BULK ROLL) .625” X 250’ - 61”
14	51974-OH	2		ELBOW, 90 - 4501-10-12
15	51614-OH	1		HEATER, element - Artic Fox
16	16717-OH	33”	✂	HOSE, HEATER - (BULK ROLL) .625” X 250’ - 94”

✂ Bulk material - order length required in feet or meters.
❑ Kit or Assembly - includes all items indented underneath.
🕮 See referenced page for component or assembly breakdown.

PAGE INTENTIONALLY LEFT BLANK

Section OS-OH-2

Optional Heaters-
Espar Parts Breakdown

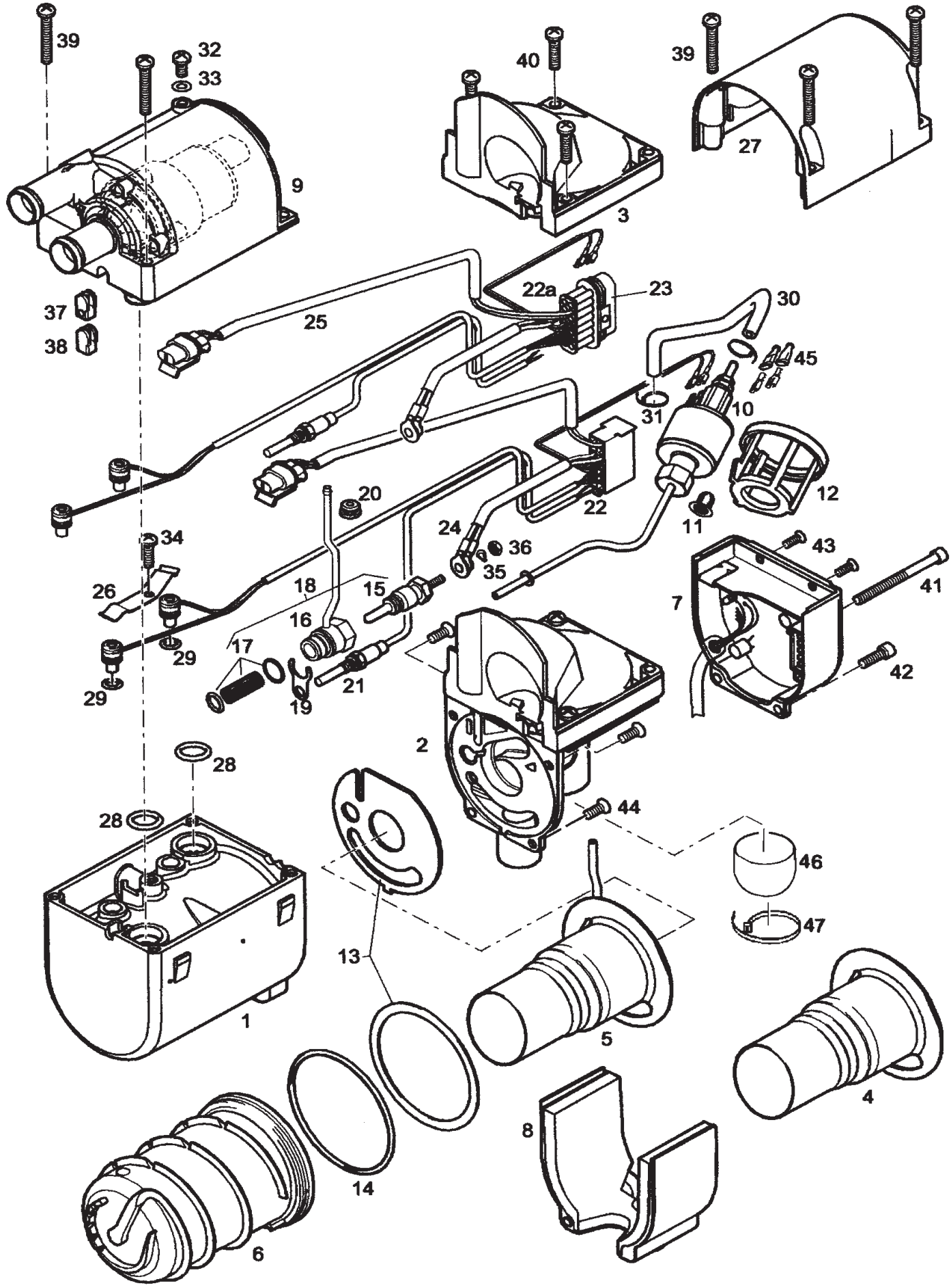
39
32
33
9
40
3
39
27
37
38
25
22a
23
30
45
31
10
12
11
20
22
24
36
35
34
26
18
15
16
17
29
29
19
21
43
41
7
42
2
44
28
28
46
47
13
1
5
4
8
14
6

Espar hydronic - Pre Heater (heater breakdown)

REF	PART #	QTY		DESCRIPTION
-	51578-OH	1	❑	KIT, PREHEATER - ESPAR (24V)
1		1		OUTER CASING (251922010101)
2		1		CUMBUSTION AIR BLOWER with COVER (252146991500) .
3		1		COVER (252137010002) .
4		1		BURNER
5		1		BURNER (252146100000)
6		1		HEAT EXCHANGER (251922060001)
7		1		CONTROL UNIT (225202001003) .
8		1		COVER
9		1		WATER PUMP (252118250000)
10		1		FUEL METERING PUMP (251942450000)
11		1		STRAINER
12		1		PUMP HOLDER (251864990021)
13		1		SEAL & GASKET (251864990021)
14		1		O-RING (32075104)
15		1		GLOW PIN (252107011000)
16		1		GLOW PIN CONNECTION
17		1		LINING AND 2 O-RINGS
18		1		PLUG CONNECTION COMPLETE (252147011300)
19		1		HOLDER (201752010004)
20		1		SLEEVE (201752010002)
21		1		FLAME SENSOR (251920350000)
22		1		OVERHEAT & TEMP SENSORS \ CABLE & CONNECTORS (252147012000)
23		1		CONTROL UNIT PLUG - COMPLETE (221000301010)
24		1		CABLE SECTION, GLOW PLUG (251920011800)
25		1		CABLE, WATER PUMP (201753011800)
26		1		SPRING LEAF (251922010005)
27		1		COVER FUEL METERING PUMP (251917010003)
28		1		ORING (32075119)
29		1		ORING, SENSOR (32075111)
30		1		FUEL HOSE (251917010011)
31		1		HOSE CLIP (20931071)
32		1		BLEED SCREW (251917250012)
33		1		BLEED SCREW WASHER
34		1		TAPITE SCREW (10910104)
35		1		SPRING WASHER (17122112)
36		1		NUT (11010024)
37		1		SLEEVE (251917010005)
38		1		GROMMET
39		1		BOLT M5X35 (10910027)
40		1		BOLT M5X25 (10910102)
41		1		BOLT (10010300)
42		1		BOLT M5X16 (10910101)
43		1		SCREW M4X10 (10910100)
44		1		SCREW (10210400)
45		1		BOOT (32031120)
46		1		DUST COVER (CA000073)

❑ Kit or Assembly - includes all items indented underneath.

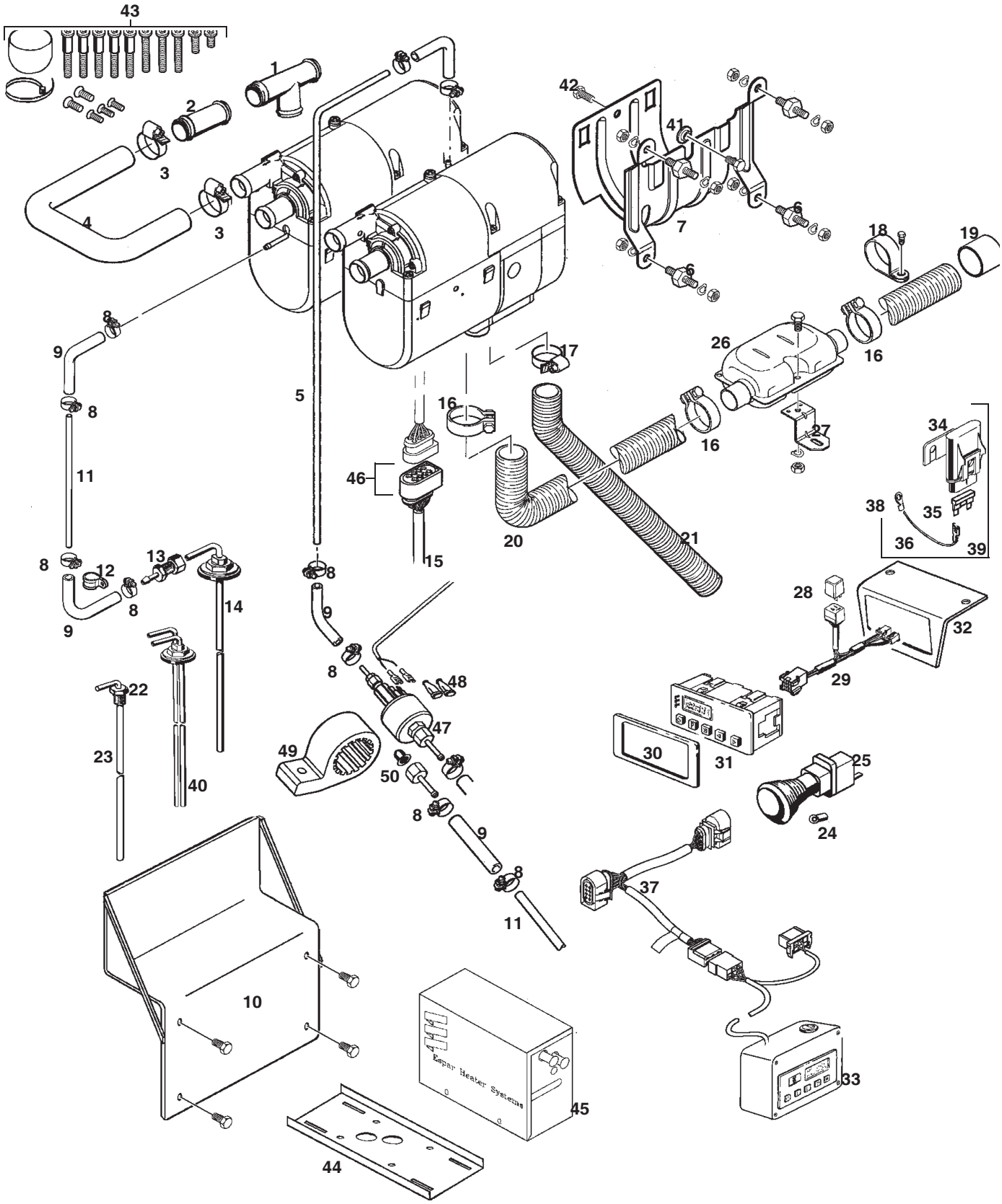
43
1
2
3
4
3
42
41
7
6
6
18
19
8
9
8
5
17
26
16
16
16
27
34
11
46
20
21
38
35
36
39
8
12
13
14
8
9
15
28
32
8
9
8
48
29
22
47
23
49
50
30
31
25
40
8
9
24
8
37
11
10
Espar Heater Systems
45
33
44

Espar hydronic - Pre Heater (heater breakdown)

REF	PART #	QTY		DESCRIPTION
-	51578-OH	1	❑	KIT, PREHEATER - ESPAR (24V
1		1		T-PIECE 20MM (201673801100) .
2		1		CONNECTING PIPE (201534880001)
3		1		CLAMP 20MM-32MM (102065020032)
4		1		HOSE (251917800001)
5		1		1.5M PLASTIC FUEL LINE (09031118)
6		1		MOUNT (201185000001)
7		1		HEATER BRACKET (251864800001)
8		1		HOSE CLAMP 9 MM (102063009098)
9		1		HOSE, FUEL (36075300)
10		1		BRACKET (CA010085)
11		1		FUEL LINE 2MM (09031117) .
12		1		CLAMP, PIPE 10MM (15200147)
13		1		FUEL PIPE REDUCER (CA012092)
14		1		FUEL PICK UP (CA012056)
15		1		MAIN HEATER HARNESS (CA160502-001)
16		1		EXHAUST CLAMP 27-30MM (15261102)
17		1		INTAKE HOSE CLAMP102064016025)
18		1		C CLAMP 28MM (15210051)
19		1		EXHAUST SLEEVE (251729800600)
20		1		EXHAUST HOSE (36061299)
21		1		INTAKE HOSE (36000099)
22		1		COMPRESSION FITTING
23		1		STRAIT PICKUP TUBE
24		1		BULB 24V (20700006)
25		1		SWITCH 24V (CA100004)
26		1		MUFFLER (251864810100)
27		1		CLAMP (201533880007)
28		1		RELAY 24V (20300092)
29		1		HARNESS ADAPTER, TIMER (CA160008001)
30		1		BEZEL, TIMER (251482700700)
31		1		TIMER, 7 DAY (221000303600) KIT W\HARNESS (CA100136)
32		1		BRACKET, TIMER (CA010061)
33		1		FAULT CODE DEVICE (CA105020)
34		1		MAIN FUSE HOLDER (CA107001)
35		1		FUSE (CA107005)
36		1		WIRE, RED (CA161908)
37		1		HARNESS, FAULT CODE (CA105028)
38		1		TERMINAL 3\8” (CA190014)
39		1		FUSE LINK HARNESS (CA165108)
40		1		DOUBLE PICKUP (CA012057001)
41		1		SPACER (251864800002) .
42		1		SCREW (CA300103)
43		1		REPLACEMENT HARDWARE KIT (CA100190)
44		1		BRACKET, FRAME MOUNT (CA010028)
45		1		BOX, BASE (CA010101) LID (CA010102)
46		1		PLUG CABLES - COMPLETE (221000301021)
47		1		FUEL PUMP 24V (221000500300)
48		1		BOOT SLEEVE (32031120)
49		1		FUEL PUMP HOLDER (221000500300)
50		1		FILTER, FUEL (224502000100) .

PAGE INTENTIONALLY LEFT BLANK

Section OH-1

Optional Heaters-
Espar Heater Installation

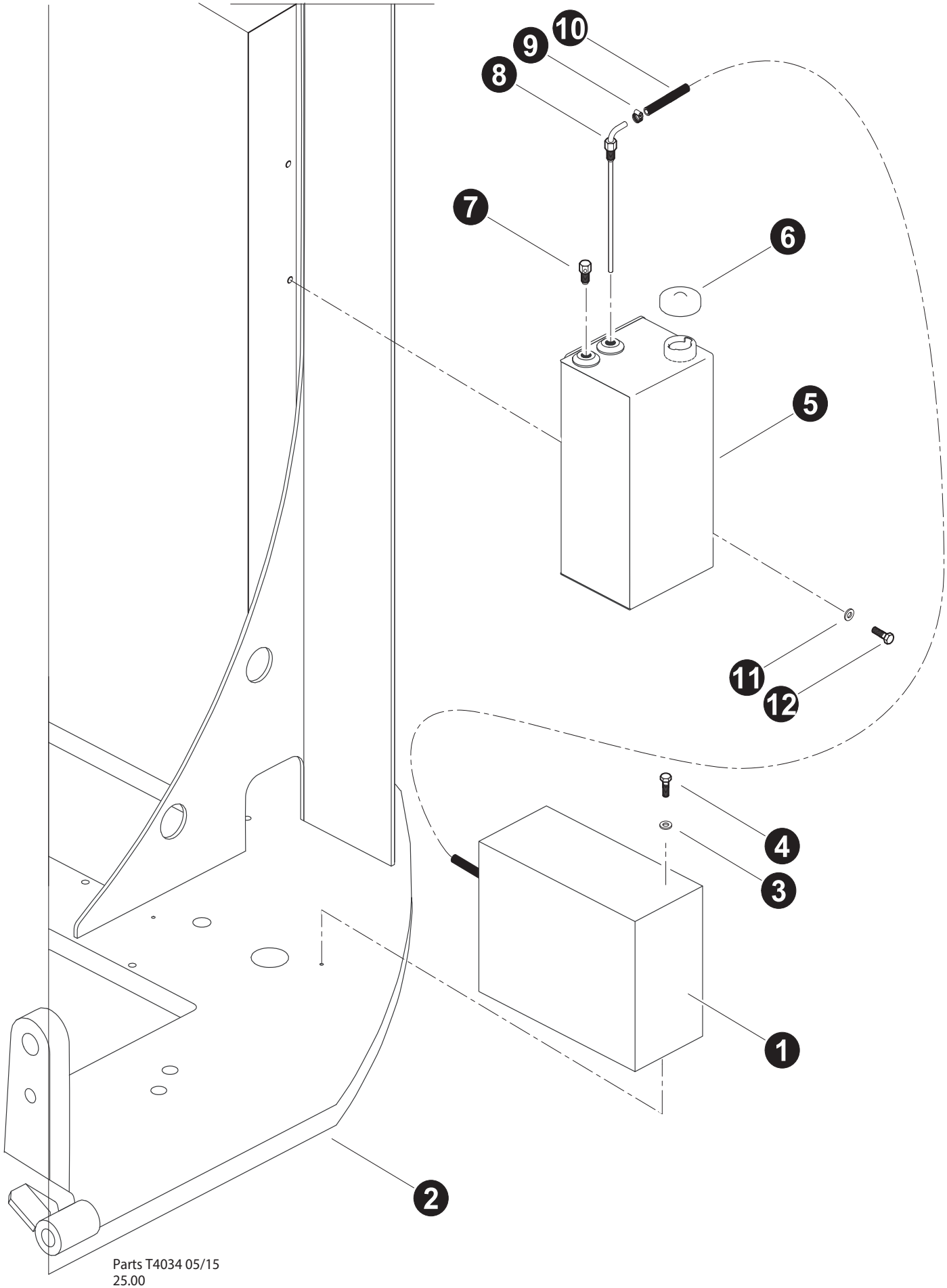

Parts T4034 05/15
25.00

Espar Heater
(Heater Installation)

REF	PART #	QTY		DESCRIPTION
1	REF	1	🕮	ESPAR PRE-HEATER SYSTEM OH-2
2	REF	1	🕮	UPPER TURNTABLE UP-1
3	10757-OH	2		WASHER, SAE FLAT - .25”
4	15604-OH	2		BOLT - .25” X .75”
5	46673-OH	1		TANK, ESPAR FUEL - C SERIES
6	52965-OH	1		CAP, ESPAR FUEL TANK
7	22906-OH	1		BEATHER, fuel vent
8	-OH	1		SUCTION TUBE, ESPAR FUEL TANK
9	10759-OH	1		CLAMP, HOSE - WORM STYLE - .875”
10	-OH			HOSE, ESPAR

❑ Kit or Assembly - includes all items indented underneath.
🕮 See referenced page for component or assembly breakdown.

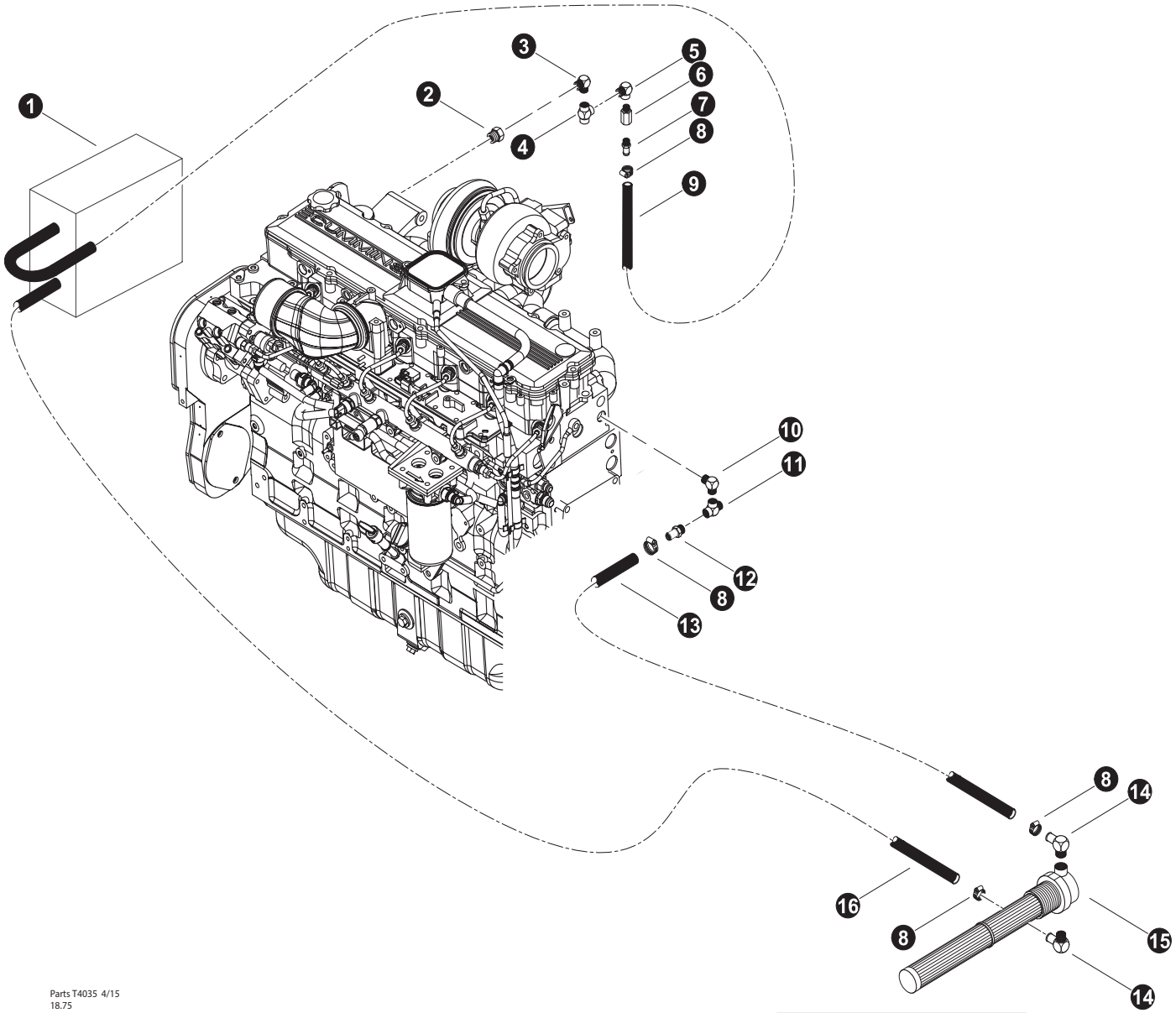

Parts T4035 4/15
18.75

Heat Element is Treaded into rear of the hydraulic tank.

Espar Heater
(Heater Installation)
Cummins QSC 8.3L

REF	PART #	QTY		DESCRIPTION	
1	REF	1	🕮	ESPAR PRE-HEATER SYSTEM	OH-2
2	15513-OH	1		BUSHING, REDUCER - 5406-12-8	
3	52785-OH	1		ELBOW, MALE PIPE - ¾ X ½ CR-S	
4	16125-OH	1		TEE, BLACK - .5”	
5	52786-OH	2		ELBOW, 1/2” X 3/8” CD-S	
6	15652-OH	2		VALVE, CHECK	
7	51502-OH	1		NIPPLE, KING - .38NPT X .63 HOSE	
8	16256-OH	8		CLAMP, hose - worm style - 7/8”	
9	52035-OH	33”	✂	HOSE, HEATER - (BULK ROLL) .625” X 250’	
10	52785-OH	1		ELBOW, MALE PIPE - ¾ X ½ CR-S	
11	51879-OH	1		TEE, RUN - .5” (1/2 MR0-S)	
12	51774-OH	1		NIPPLE, KING - 1/2” NPT X 5/8” HOSE	
13	16717-OH	33”	✂	HOSE, HEATER - (BULK ROLL) .625” X 250’ - 61”	
14	51974-OH	2		ELBOW, 90 - 4501-10-12	
15	51614-OH	1		HEATER, element - Artic Fox	
16	16717-OH	33”	✂	HOSE, HEATER - (BULK ROLL) .625” X 250’ - 94”	

✂ Bulk material - order length required in feet or meters.
❑ Kit or Assembly - includes all items indented underneath.
🕮 See referenced page for component or assembly breakdown.

PAGE INTENTIONALLY LEFT BLANK

Section OH-2

Optional Heaters-
Espar Parts Breakdown

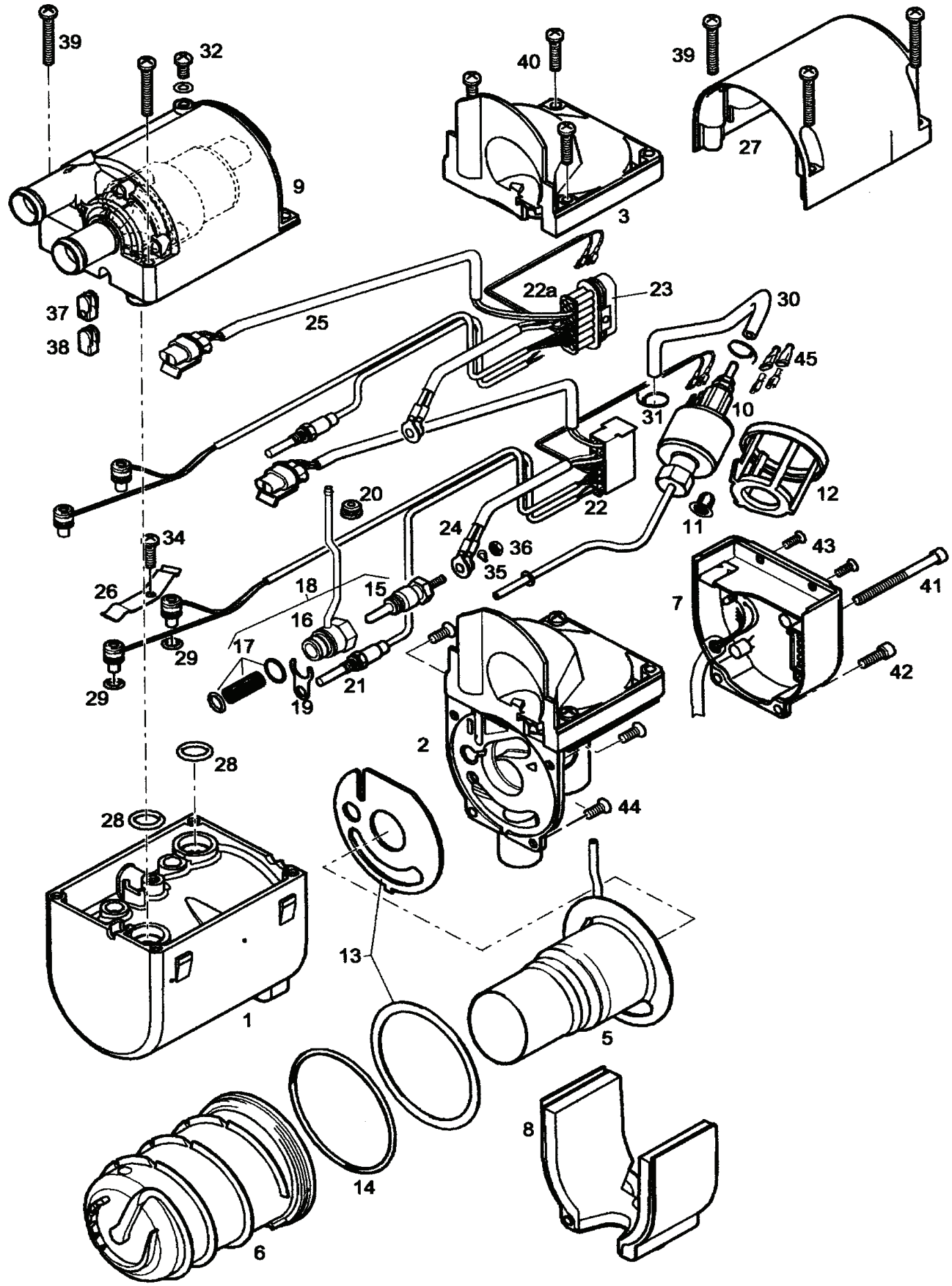
39
32
9
40
3
39
27
37
38
25
22a
23
30
45
31
10
12
11
20
22
24
36
35
34
26
18
15
16
17
29
29
21
19
43
41
7
42
2
44
28
28
1
13
5
14
8
6

Espar hydronic - Pre Heater (heater breakdown)

REF	PART #	QTY	DESCRIPTION
-	51578-OH	1	❑ KIT, PREHEATER - ESPAR (24V)
1		1	OUTER CASING (25 1920 01 01 01)
2		1	CUMBUSTION AIR BLOWER with COVER (25 2146 99 17 00)
3		1	COVER (25 2137 01 00 02)
5		1	BURNER (25 2146 10 00 00)
6		1	HEAT EXCHANGER (25 1922 06 00 01)
7		1	CONTROL UNIT (22 5202 01 10 01)
8		1	COVER (20 1752 99 01 03)
9		1	COOLANT PUMP (25 2118 25 00 00)
10		1	FUEL METERING PUMP (25 1942 45 00 00)
11		1	INTEGRATED FUEL FILTER (20 1312 00 00 06)
12		1	HOLDER, FUEL METERING PUMP (25 1917 01 00 07)
13		1	SEAL & GASKET (20 1820 99 00 01)
14		1	O-RING (22 1000 70 00 18)
15		1	GLOW PIN (25 2107 01 10 00)
16		1	GLOW PIN CONNECTION
17		1	LINING AND 2 O-RINGS
18		1	GLOW PIN AND LINKING ASSEMBLY (25 2147 01 13 00)
19		1	HOLDER (20 1752 01 00 04)
20		1	SLEEVE (20 1752 01 00 02)
21		1	FLAME SENSOR (25 1920 37 00 00)
22		1	OVERHEAT SENSOR WITH CABLE (25 2147 01 20 00)
23		1	PLUG KIT 14 PIN (22 1000 30 10 10)
24		1	GLOW PLUG HARNESS (25 1920 01 18 00)
25		1	CABLE, WATER PUMP (25 2219 01 23 00)
26		1	SPRING LEAF (25 1922 01 00 05)
27		1	COVER FUEL METERING PUMP (25 1917 01 00 03)
28		1	ORING 14X2.6 (22 1000 70 00 06)
29		1	ORING, SENSOR 7.0X2 (22 1000 70 00 09)
30		1	FUEL HOSE (25 1917 01 00 11)
31		1	HOSE CLIP (209 31 071)
32		1	BLEED SCREW (25 1917 25 00 12)
34		1	TAPITE SCREW (109 10 153)
35		1	SPRING WASHER (5590087)
36		1	NUT (5590066)
37		1	SLEEVE (25 1917 01 00 05)
38		1	GROMMET
39		1	BOLT M5X35 (109 10 154)
40		1	BOLT M5X25 (109 10 152)
41		1	BOLT (100 10 350)
42		1	BOLT M5X16 (109 10 151)
43		1	SCREW M4X10 (109 10 150)
44		1	SCREW (102 10 302)
45		1	BOOT (320 31 120)

❑ Kit or Assembly - includes all items indented underneath.

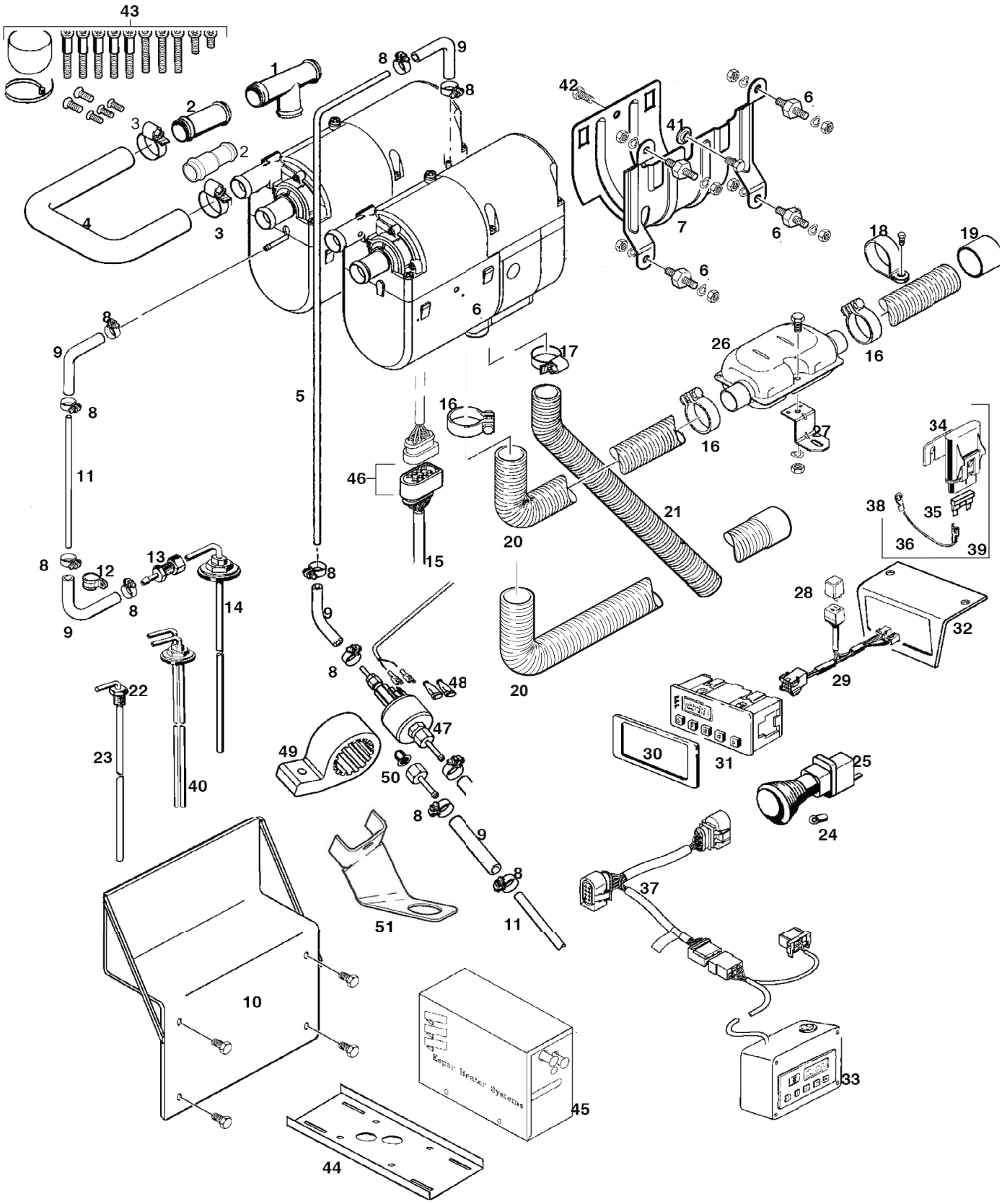
43
1
2
3
4
5
6
7
8
9
10
11
12
13
14
15
16
17
18
19
20
21
22
23
24
25
26
27
28
29
30
31
32
33
34
35
36
37
38
39
40
41
42
44
45
46
47
48
49
50
51
Espar Heater Systems

Espar hydronic - Pre Heater (heater breakdown)

REF	PART #	QTY		DESCRIPTION
-	51578-OH	1	❑	KIT, PREHEATER - ESPAR (24V
1		1		T-PIECE 20MM (20 1673 80 11 00) .
2		1		CONNECTING PIPE (20 1534 88 00 01)
2		1		CONNECTING PIPE (EARLY SC HEATER) (20 1645 89 00 06)
3		1		CLAMP 20MM-32MM (10 2066 02 00 32)
4		1		HOSE (25 1917 80 00 01)
5		1		1.5M PLASTIC FUEL LINE (890 31 118)
6		1		MOUNT (20 1185 00 00 01)
7		1		HEATER BRACKET (25 1864 80 00 01)
8		1		HOSE CLAMP 9 MM (10 2068 00 90 98)
9		1		HOSE, FUEL (360 75 300)
10		1		BRACKET (20 2900 40 00 85)
11		1		FUEL LINE 2MM (890 31 055) . .
12		1		CLAMP, PIPE 10MM (152 00 139)
13		1		FUEL PIPE REDUCER (25 1888 80 01 02)
14		1		FUEL PICK UP (20 2900 20 20 10)
15		1		MAIN HEATER HARNESS (20 2900 70 20 13)
16		1		EXHAUST CLAMP 27-30MM (152 61 102)
17		1		INTAKE HOSE CLAMP (10 2066 02 00 32)
18		1		C CLAMP 28MM (52 09 010)
19		1		EXHAUST SLEEVE (25 1729 80 06 00)
20		1		EXHAUST HOSE (360 61 299)
20		1		EXHAUST HOSE (EARLY SC HEATER) (25 1774 80 02 00)
21		1		INTAKE HOSE (360 00 099)
22		1		COMPRESSION FITTING 1/4” NPT (20 2900 20 20 44)
22		1		COMPRESSION FITTING 3/8” NPT (552 0002)
22		1		COMPRESSION FITTING 1/2” NPT (552 0006)
23		1		STRAIT PICKUP TUBE (20 2900 20 20 02)
24		1		BULB 24V (207 00 006)
25		1		SWITCH 24V (567 0008)
26		1		MUFFLER (25 1864 81 01 00)
27		1		CLAMP (20 1533 88 00 07)
28		1		RELAY 24V (20300092)
29		1		HARNESS ADAPTER, TIMER (CA160008001)
30		1		BEZEL, TIMER (25 1482 70 01 00)
31		1		TIMER, 7 DAY (22 1000 30 36 00)
31		1		TIMER, 7 DAY with KIT (Harness and Relay) (20 2900 70 01 36)
32		1		BRACKET, TIMER (20 2900 40 01 58)
33		1		FAULT CODE DEVICE (20 2900 70 50 20)
34		1		MAIN FUSE HOLDER (20 2900 70 50 28)
35		1		FUSE (5670055)
36		1		WIRE, RED (5670117)
37		1		HARNESS, FAULT CODE (5670051)
38		1		TERMINAL 3\8” (5670178)
39		1		FUSE LINK HARNESS (20 2900 70 51 08)
40		1		DOUBLE PICKUP (20 2900 20 20 57)
41		1		SPACER (25 1864 80 00 02) .
42		1		SCREW (CA300103)
43		1		REPLACEMENT HARDWARE KIT (CA100190)
44		1		BRACKET, FRAME MOUNT (20 2900 40 00 28)
45		1		BOX, BASE (25 2800 40 05 01) LID (25 2800 40 05 01)
46		1		PLUG CABLES - COMPLETE (22 1000 30 10 21)
47		1		FUEL PUMP 24V (25 1942 45 00 00)
48		1		BOOT SLEEVE (320 31 120)
49		1		FUEL PUMP HOLDER (22 1000 50 03 00)
50		1		FILTER, FUEL (20 1312 00 00 06)
51		1		BRACKET, ANGLE (20 2900 40 01 04)

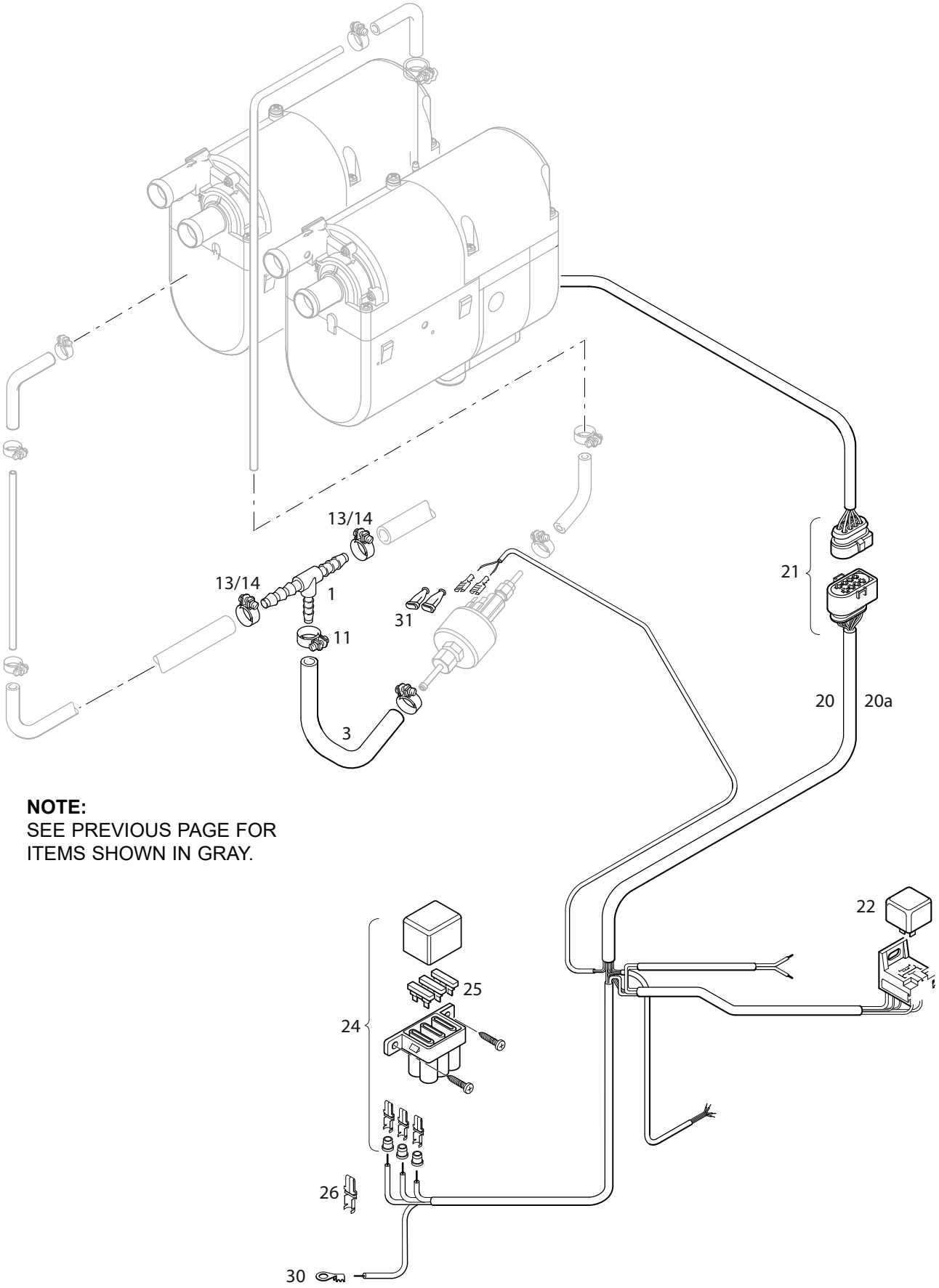

NOTE:
SEE PREVIOUS PAGE FOR
ITEMS SHOWN IN GRAY.

Espar hydronic - Pre Heater (heater breakdown)

REF	PART #	QTY	DESCRIPTION
1		1	T-PIECE 8-6-8 (262 31 151)
3		1	HOSE, 5X30 MM (360 75 350)
11		1	CLAMP, HOSE 11MM (10 2068 01 10 98)
12		1	CLAMP, HOSE 9MM (10 2068 00 90 98)
13		1	CLAMP, HOSE 14MM (10 2068 01 40 98)
14		1	CLAMP, HOSE 12MM (10 2068 01 20 98)
20		1	HARNESS, MAIN - JE UNIVERSAL WITH RELAY (25 2009 80 10 00)
20A		1	HARNESS, MAIN EBERSPAECHER NA (20 2900 70 05 07)
21		1	CONNECTION KIT MAIN HARNESS (22 1000 30 10 21)
22		1	RELAY (203 00 095)
24		1	FUSE HOLDER KIT (22 1000 31 06 00)
25		1	FUSE 25 AMP (204 00 089) 20 AMP (5670055) 5 AMP (204 00 079)
26		1	(NO SUPPLIER #)
30		1	EYELET (*NO SUPPLIER #)
31		2	INSULATOR (320 31 120)

NOTE:
SEE PREVIOUS PAGE FOR ITEMS SHOWN IN GRAY.

Espar hydronic - Pre Heater (heater breakdown)

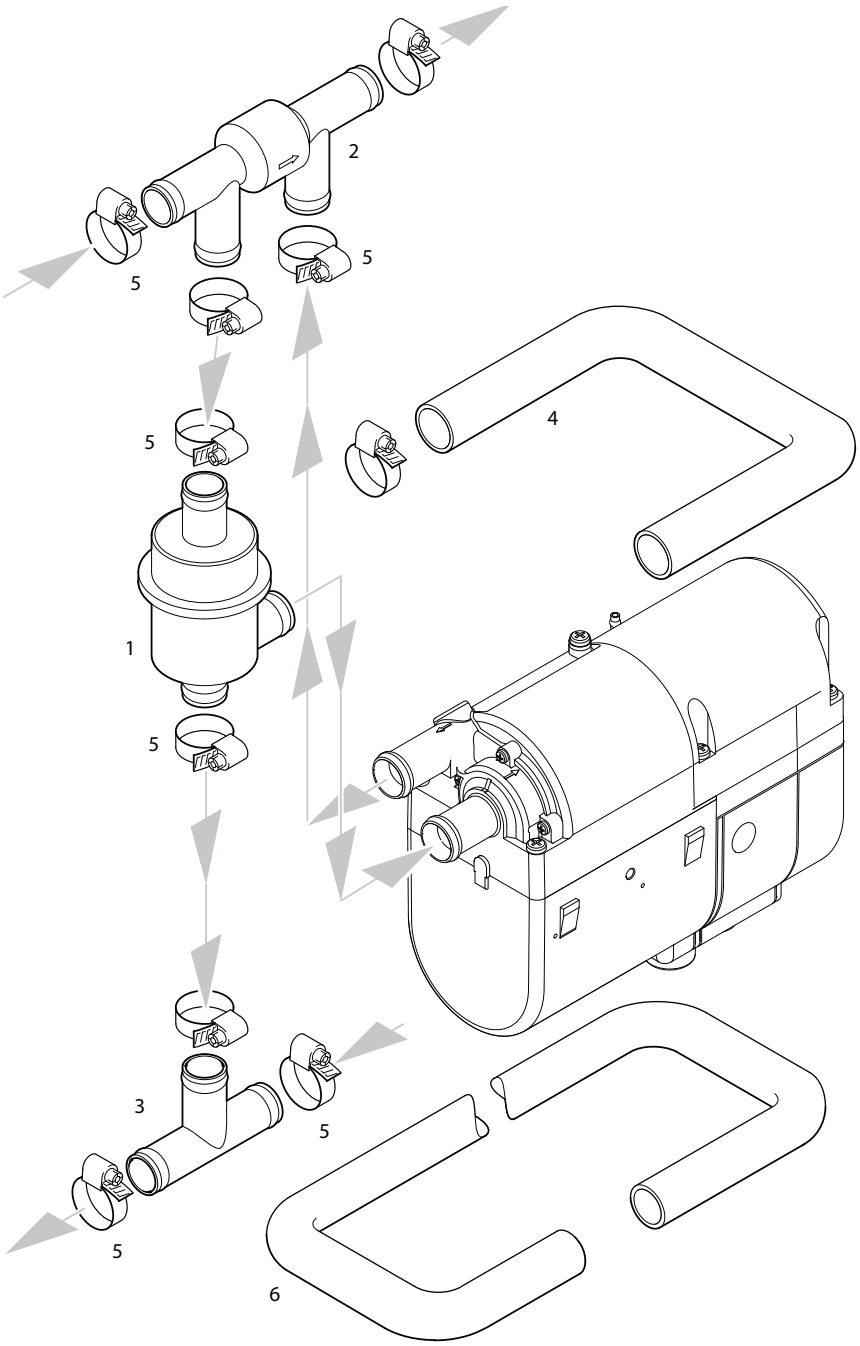

REF	PART #	QTY	DESCRIPTION
1		1	THERMOSTAT (330 00 158)
2		1	ONE WAY VALVE (254 00 070)
3		1	T-PIPE PIECE (20 1645 89 10 00)
4		1	HOSE -MOULDED 20 MM (24 0117 80 00 01)
5		1	HOSE CLAMP 20 - 32MM (10 2065 02 00 32)
6		1	HOSE MOULDED 18 MM (24 0132 00 00 01)

SECTION ES-1
ENGINE ELECTRICAL SYSTEM

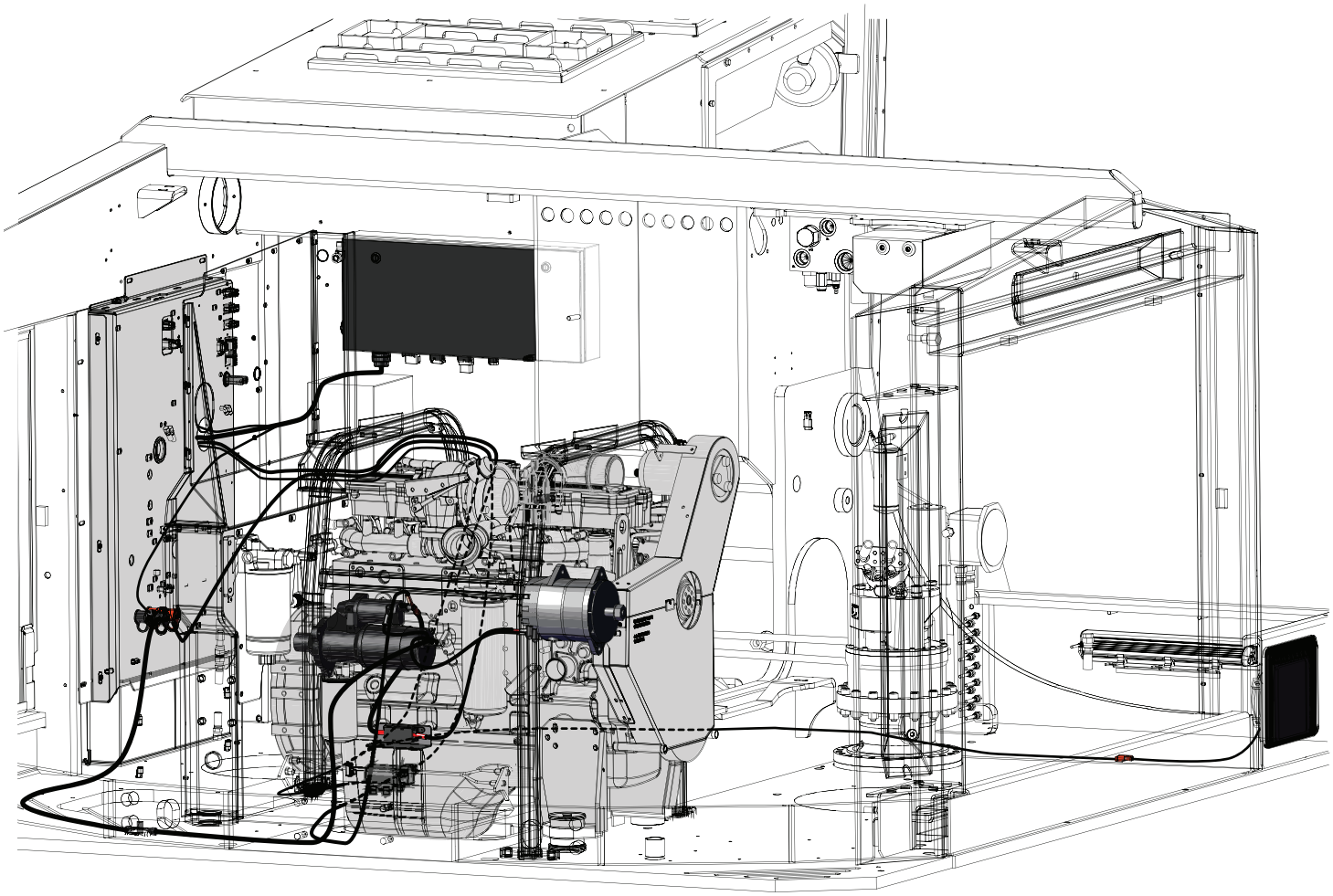

ENGINE ELECTRICAL SYSTEM
BATTERY INSTALLATION

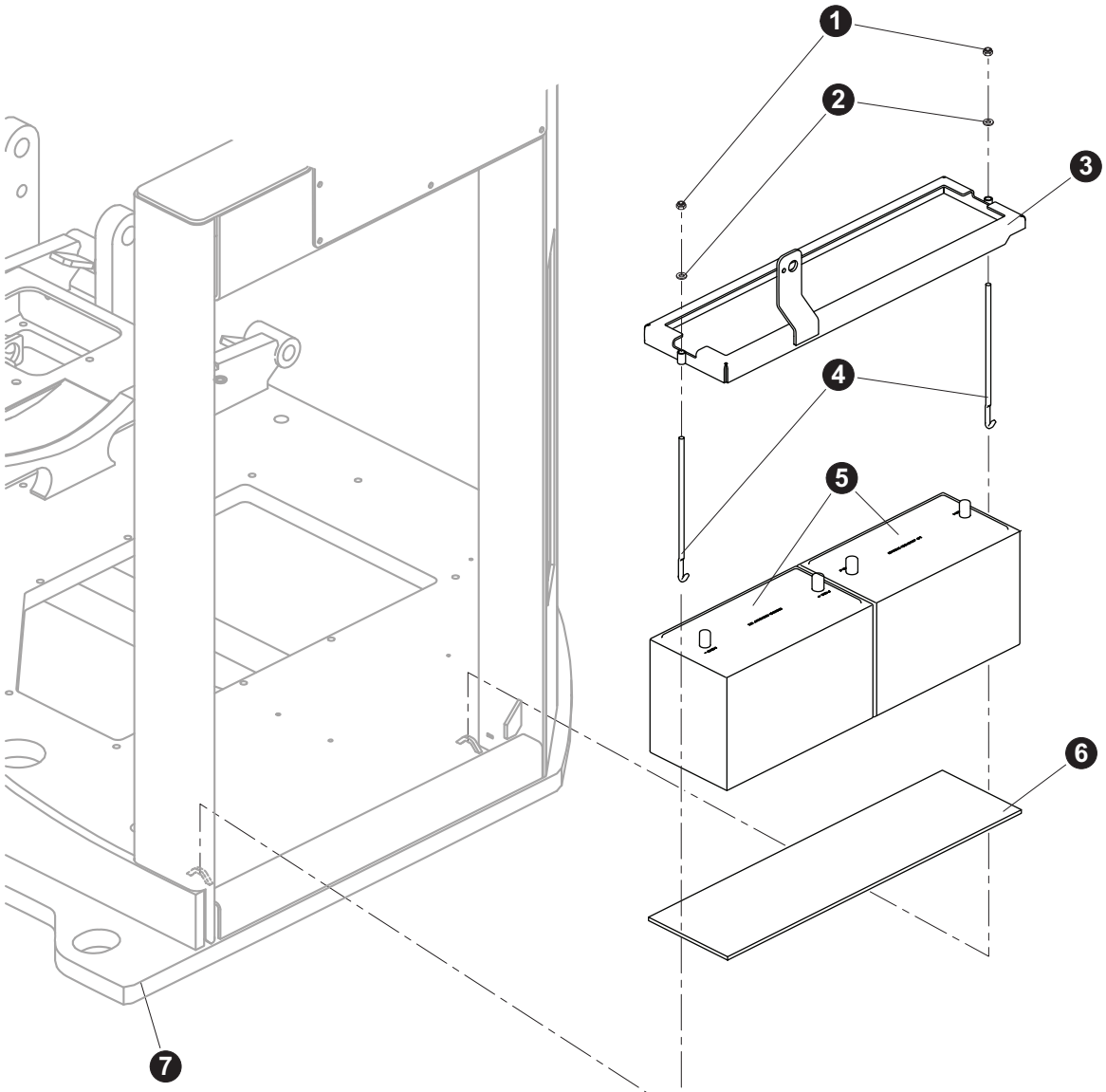

REF	PART #	QTY	DESCRIPTION	SEE SECTION
1	10788	2	NUT, NYLOCK - .3125”	
2	15559	2	WASHER, SAE FLAT - .3125”	
3	45537	1	BRACKET, BATTERY HOLD DOWN	
4	51722	1	HOLD DOWN, BATTERY - (2 PER PACK)	
5	17150	2	BATTERY, HEAVY DUTY	
6	45720	1	RUBBER, ISOLATOR - BATTERY HOLD DOWN	
7	(Click Here)	1	UPPER TURNTABLE ASSEMBLY.	UP-1

📖See referenced page for component or assembly breakdown.

ENGINE ELECTRICAL SYSTEM
CUMMINS STAGE V AFTER TREATMENT HARNESS

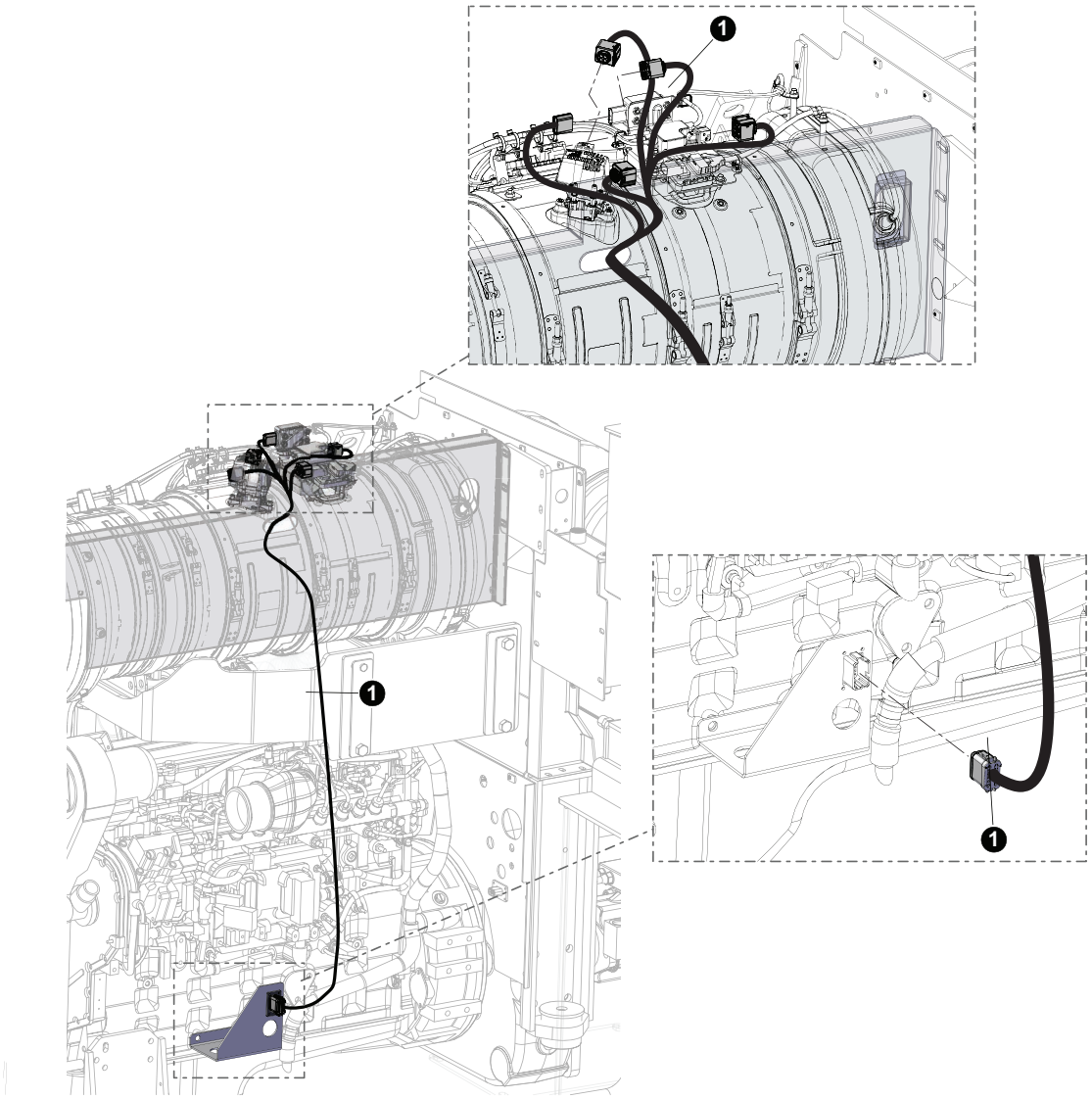

REF	PART #	QTY	DESCRIPTION	SEE SECTION
1	60329	1	HARNESS, AFTER TREATMENT - CUMMINS STG5	

📖See referenced page for component or assembly breakdown.

ENGINE ELECTRICAL SYSTEM

CONTROL PANEL, FILL PUMP, GULL WING LIFT PUMP HARNESS, AND ENGINE CABLES

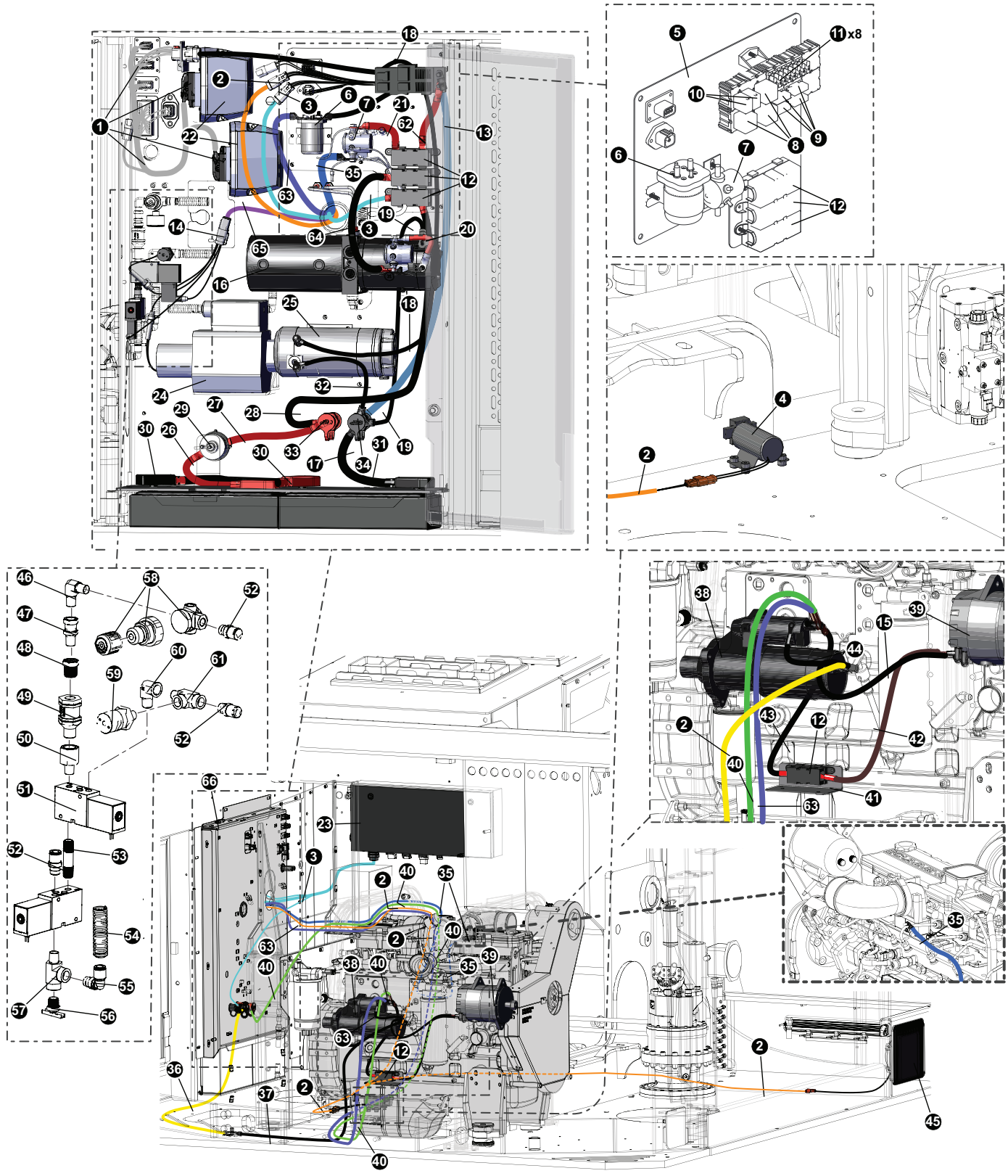

ENGINE ELECTRICAL SYSTEM
CONTROL PANEL, FILL PUMP, GULL WING LIFT PUMP HARNESS, AND ENGINE CABLES

REF	PART #	QTY	DESCRIPTION	SEE SECTION
1	57934	1	HARNESS, XA2 MODULES - D SERIES	
2	57592	1	HARNESS, GEARBOX OIL COOLER - 775	
3	61252	1	HARNESS, Cab Power L9 775D	
4	57464	1	PUMP, GEAR BOX COOLER - TL775	
5	46695	1	LOAD CENTER - ENG Comp MD4	
6	25117	1	RELAY, STARTER - 24 volt (WHITE/ROGERS)	
7	25199	1	RELAY, GRID HEATER - 24 volt (COLE HERSEE)	
8	51755	3	RELAY, 70 AMP - LIGHTS / IGNITION / ACCESORY / Fill Pump	
9	21892	2	FUSE, MAXI - 30 AMP (lights)	
	21893	2	FUSE, MAXI - 50 AMP (starter, fill pump)	
10	53645	2	RELAY, AZ988-1C-24DE-C1 / American Zettler	
	21890	1	FUSE, MINI - 5 AMP (Horn)	
	21887	1	FUSE, MINI - 15 AMP (Gear Box Pump)	
11	24512	4	FUSE, ATO - 10 AMP (lights)	
	51754	1	FUSE, ATO - 20 AMP (Engine Pre Heater)	
	50401	1	FUSE, ATO - 30 AMP (Cummins ECU)	
12	23619	3	FUSE, 100 AMP - MEGA (cab power supply, gull wing lift pump, grid heater, alternator)	
13	(NO REPLACEMENT#)	1	CABLE, GROUND, (CONTACT LTL SUPPLY CO)	
14	55193	1	HARNESS, vac vent Fill	
16	(Click Here)	1	GULLWING DOOR LIFT PUMP	UP-1
17	55337	1	CABLE, BATTERY - NEGATIVE - 9”	
18	(NO REPLACEMENT#)	1	CABLE, Fill Pump (CONTACT LTL SUPPLY CO)	
19	55336	1	CABLE, BATTERY - NEGATIVE - 24”	
20	(NO REPLACEMENT#)	1	CABLE, POSITIVE, (CONTACT LTL SUPPLY CO)	
21	(NO REPLACEMENT#)	1	CABLE, POSITIVE, (CONTACT LTL SUPPLY CO)	
22	53095	2	MODULE, XA2 - IQAN	
23	(Click Here)	1	CAB ELECTRICAL CENTER	ES-2
24	51615	1	PUMP, VACUUM - HYD TANK	
25	(Click Here)	1	FILL PUMP ASSEMBLY	UP-1
26	55334	1	CABLE, BATTERY - POSITIVE - 14”	
27	55333	1	CABLE, BATTERY-POSITIVE - 10”	
28	(NO REPLACEMENT#)	1	CABLE, POSITIVE, (CONTACT LTL SUPPLY CO)	
29	25200	1	SWITCH, MASTER SHUT-OFF(1/2” STUD)	
30	24300	1	CABLE, BATTERY POS/NEG JUMPER	
31	57510	1	CABLE, GROUND - 765	
32	(NO REPLACEMENT#)	1	CABLE, NEGATIVE, (CONTACT LTL SUPPLY CO)	
33	54643	1	STUD, THRU BATTERY CABLE POSITIVE +	
34	54642	1	STUD, THRU BATTERY CABLE 1/2” NEGATIVE -	
35	57392	4	CABLE, GRID HEATER FUSE	
36	55329	1	CABLE, BATTERY - NEGATIVE - 54”	
37	55328	1	CABLE, BATTERY - NEGATIVE - 46”	
38	(Click Here)	1	STARTER	EE-1
39	(Click Here)	1	ALTERNATOR	EE-1
40	55327	1	CABLE, BATTERY - POSITIVE - 94”	
41	60433	1	HOLDER, FUSE	
42	57922	1	CABLE, BATTERY - NEGATIVE - “D” - 30.5”	
43	55332	1	CABLE, BATTERY - POSITIVE -26”	
44	(NO REPLACEMENT#)	1	CABLE, NEGATIVE (CONTACT LTL SUPPLY CO)	
45	55528	1	COOLER, GEAR BOX - REMOTE	
46	55205	1	FITTING, ELBOW - 6 CTX-S	
47	11331	1	CONNECTOR, STR SWIVEL - 1404-4-4	
48	11318	1	BUSHING, REDUCER - 5406-6-4	
49	15652	1	VALVE, CHECK - HYDRAULIC/FUEL	
50	52145	1	ADAPTER, EXPANDER - 3/8 X 1/4 FG-S	
51	51616	2	VALVE, 3-WAY VACUUM PUMP	
52	52506	2	CONNECTOR, STR - PUSH HOSE - 1/4” VACUUM	
53	16314	1	NIPPLE, PIPE - .25” X 2”	
54	51738	LF (10 FT.)	HOSE, VACUUM PUMP 3/8” PUSH ON	
55	51739	1	CONNECTOR, ELBOW -PUSH ON (VACUUM) (1/4”)	
56	15650	1	VALVE, TANK VENT - DC602-6	
57	10393	1	TEE - 1/4 MRO	
58	15649	1	REGULATOR, TURBO BOOST	
59	51737	1	SWITCH, PRESSURE - VACUUM PUMP (HYD TANK)	
60	16251	1	ELBOW, 90 STREET - 5502-4	
61	10393	1	TEE - 1/4 MRO	
62	(NO REPLACEMENT#)	1	CABLE, POSITIVE, (CONTACT LTL SUPPLY CO)	
63	57517	1	CABLE, START RELAY TO STARTER - 775	
64	(NO REPLACEMENT#)	1	CABLE, NEGATIVE, (CONTACT LTL SUPPLY CO)	
65	(Click Here)	1	HARNESS, GEARBOX OIL COOLER - 775	
66	53621	1	PANEL, XA2 MDL SYSTEM	

ENGINE ELECTRICAL SYSTEM
ENGINE PUMPS, CONTROL PANEL, AND MAIN VALVE WIRE HARNESS

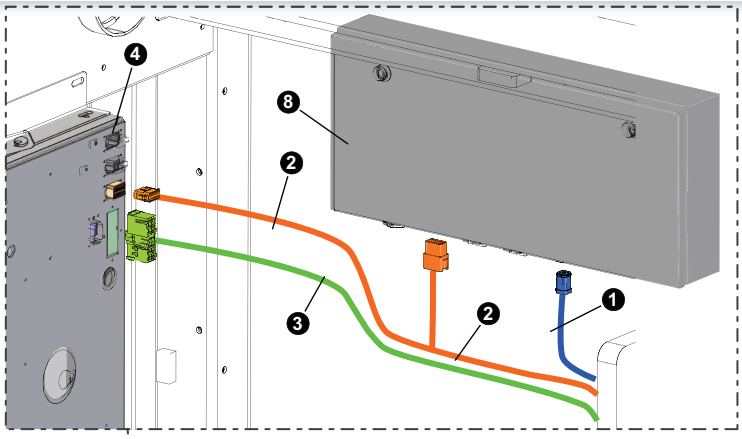

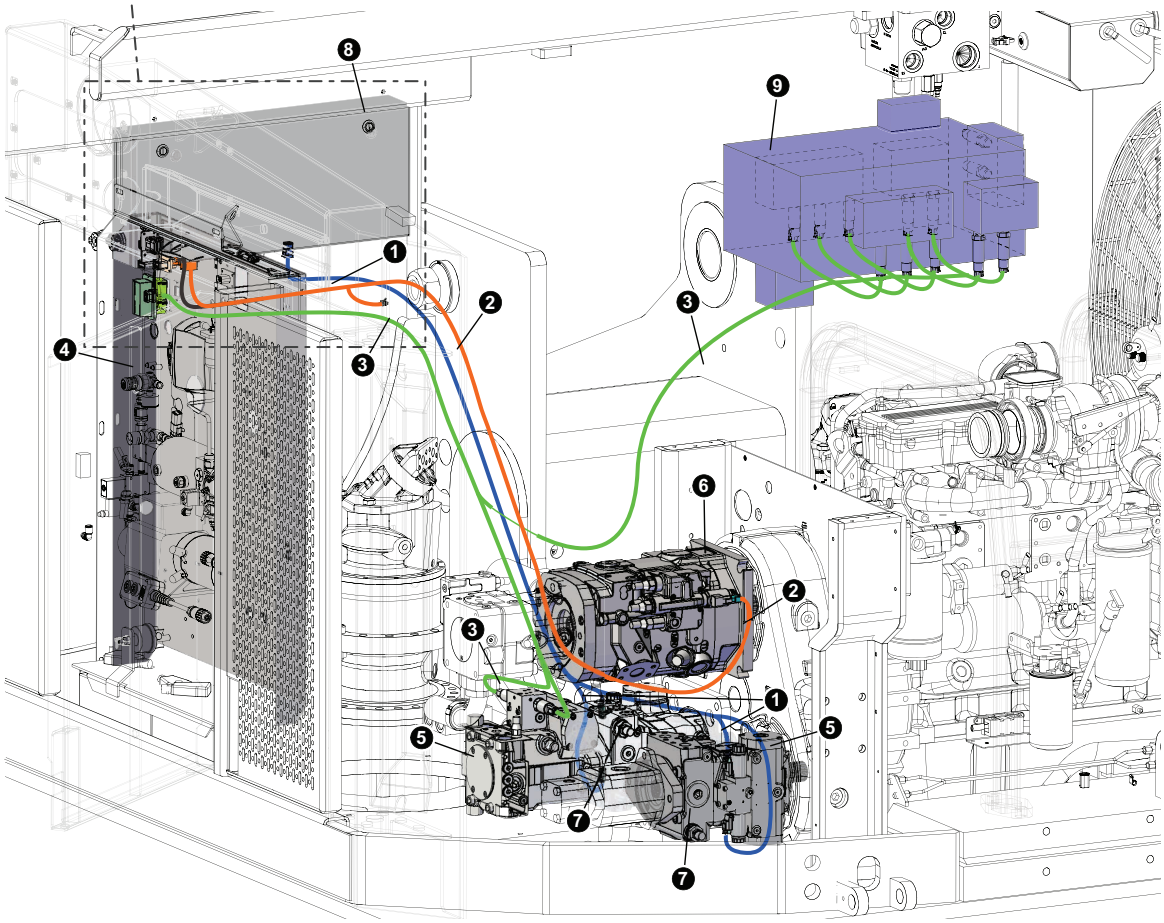

REF	PART #	QTY	DESCRIPTION	SEE SECTION
1	57389	1	HARNESS, Hydrostatic Pump - 775D	
2	58274	1	Harness, Cab to XA2 panel 775D	
3	61248	1	HARNESS, Control Valve - 775 REXROTH	
4	(Click Here)	1	ELECTRICAL PANEL	ES-1
5	(Click Here)	1	SWING PUMP	EE-1
6	(Click Here)	1	IMPLEMENT PUMP	EE-1
7	(Click Here)	2	TRACK DRIVE PUMP	EE-1
8	(Click Here)	1	CAB MAIN ELECTRICAL CENTER	ES-2
9	(Click Here)	1	MAIN CONTROL CENTER	FH-1

ENGINE ELECTRICAL SYSTEM
ENGINE, GEARBOX, AND ROTARY MANIFOLD WIRE HARESS

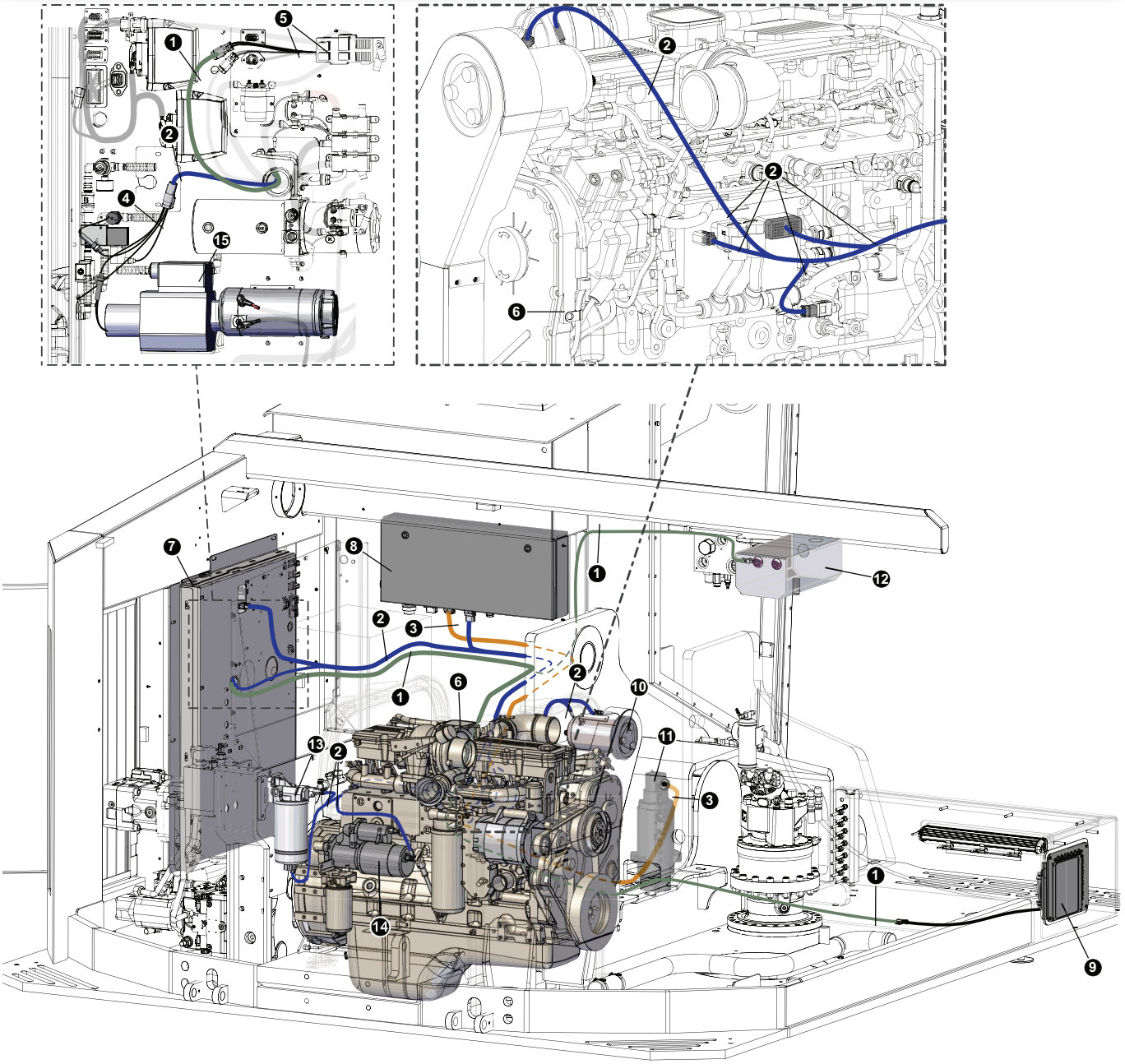

REF	PART #	QTY	DESCRIPTION	SEE SECTION
1	57592	1	HARNESS, GEARBOX OIL COOLER - 775	
2	58273	1	HARNESS, Engine - Tier3 Cummins 775D	
3	54843	1	HARNESS, Rotary Man - track- Tier4	
4	(Click Here)	1	HARNESS, Vac Vent Fill	ES-1
5	(NO REPLACEMENT #)	1	Fuse Box (CONTACT LTL SUPPLY CO)	
6	(Click Here)	1	ENGINE, CUMMINS QSL9 - TPEM (325 HP)	EE-1
7	(Click Here)	1	PANEL, ELECTRICAL - D-MODEL	EE-1
8	(Click Here)	1	CAB MAIN ELECTRICAL CENTER	ES-2
9	55528	1	COOLER, GEAR BOX - REMOTE	
10	(Click Here)	1	AC Compresser	EE-1
11	(Click Here)	1	Rotary Manifold	UP-1
12	(Click Here)	1	Surge Tank	UP-1
13	(Click Here)	1	Fuel Filter	UP-1
14	(Click Here)	1	Starter	EE-1

ENGINE ELECTRICAL SYSTEM

CHARGE FAN, MOTOR-SHIFT, DISC SAW, PARKING BRAKE, AND HYDRAULIC TANK

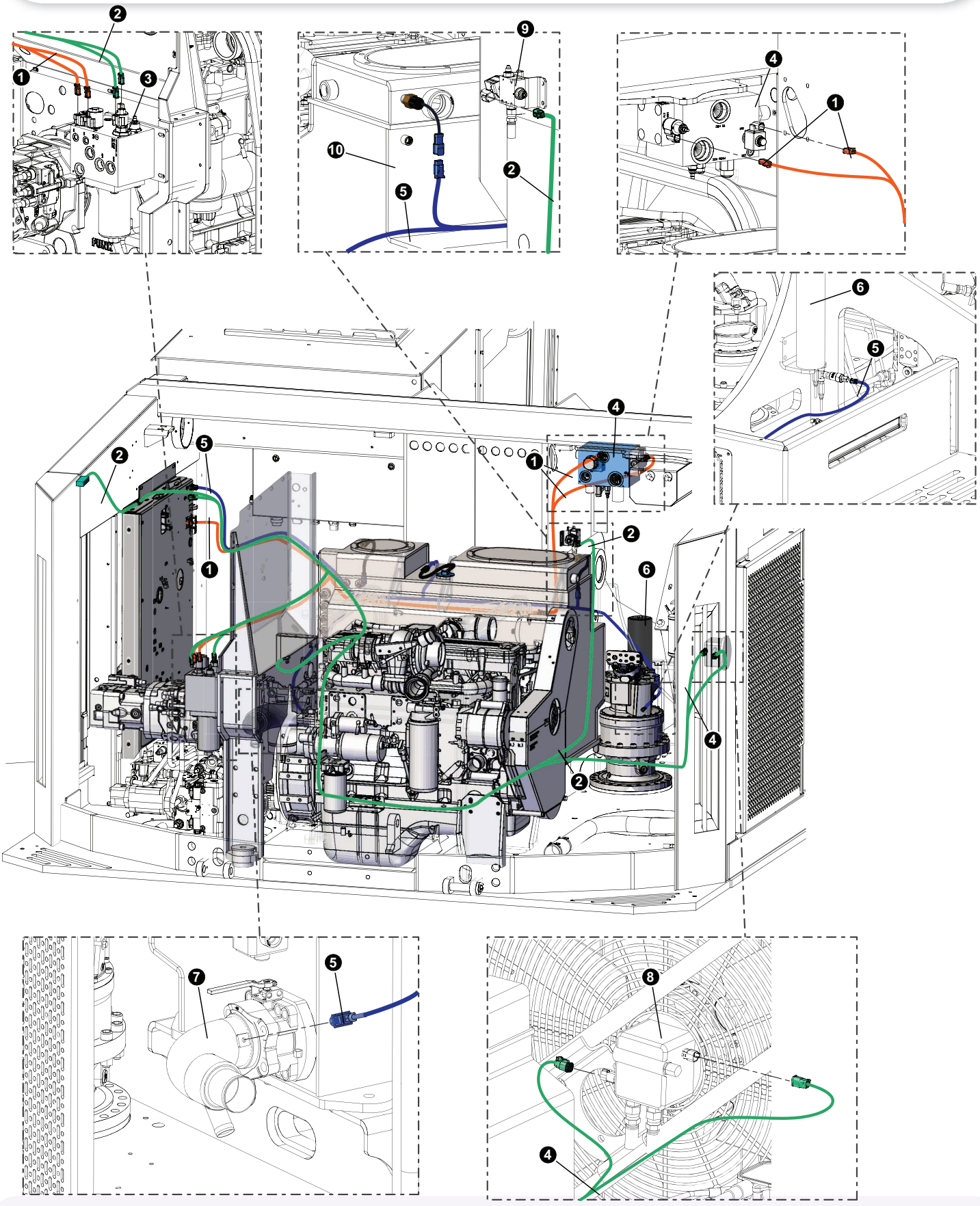

ENGINE ELECTRICAL SYSTEM
CHARGE FAN, MOTOR-SHIFT, DISC SAW, PARKING BRAKE, AND HYDRAULIC TANK

REF	PART #	QTY	DESCRIPTION	SEE SECTION
1	62047	1	HARNESS, Track MS, PB, Disc 775D	
2	62048	1	HARNESS, Charge-Fan - 775D	
3	(Click Here)	1	MANIFOLD, CHARGE / COOLER - D Silver	
4	(Click Here)	1	MANIFOLD, OIL COOLER CONTROL - D SERIES	ES-1
5	62046	1	HARNESS, Hydraulic Tank - 775	
6	(Click Here)	1	ACCUMULATOR, HYDRAULIC	EE-1
7	(Click Here)	1	90 DEG ELBOW, HYDRAULIC TANK	EE-1
8	(Click Here)	1	MOTOR, FAN DRIVE - RADIATOR W/FAN CONTR0L	ES-2
9	57509	1	VALVE, AUTO GREASE SYSTEM	
10	(Click Here)	1	AC Compresser	EE-1

ENGINE ELECTRICAL SYSTEM
HARNESS, ENGINE - CUMMINS STAGE V

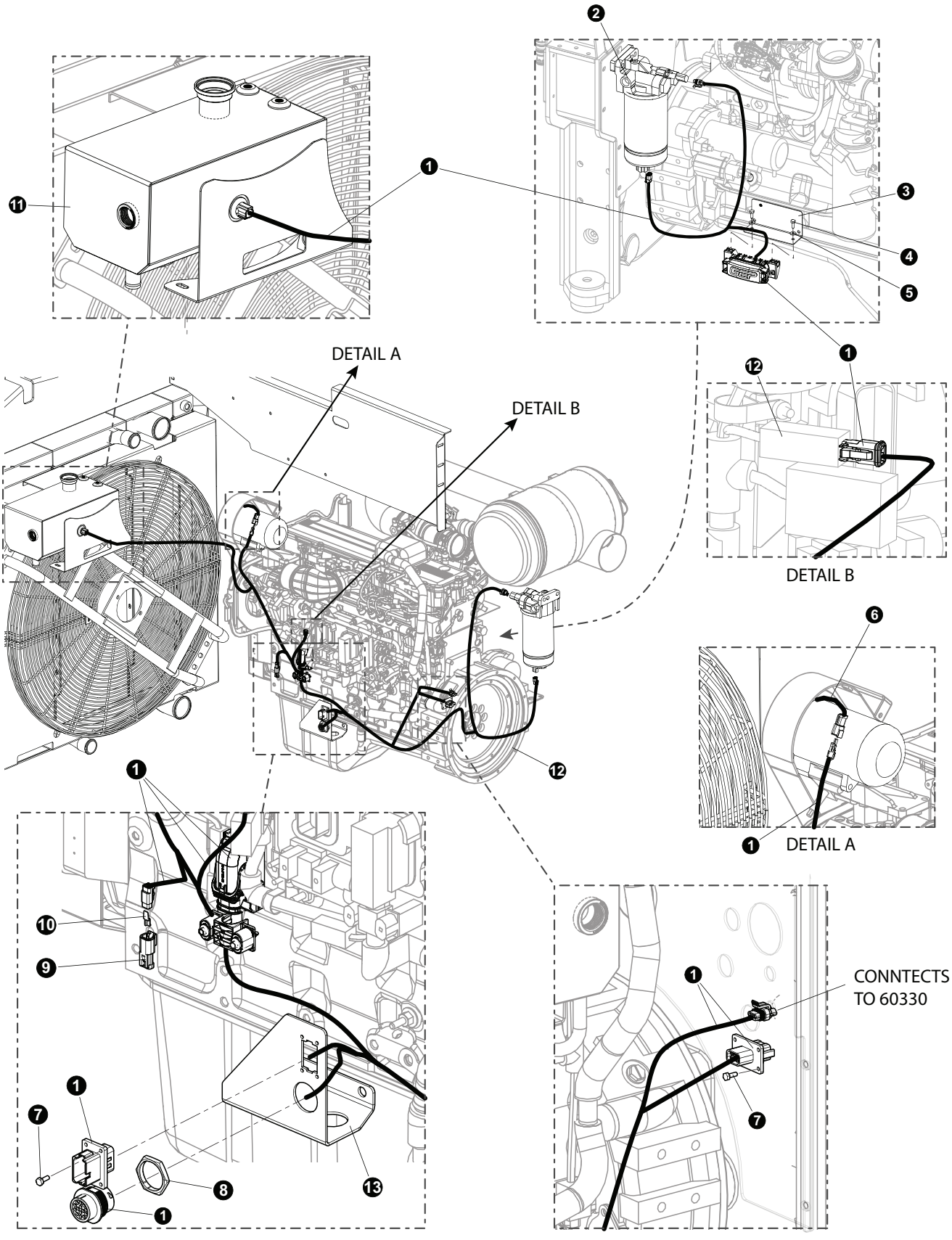

ENGINE ELECTRICAL SYSTEM
HARNESS, ENGINE - CUMMINS STAGE V

REF	PART #	QTY	DESCRIPTION	SEE SECTION
1	60327	1	HARNESS, ENGINE - CUMMINS STG5	
2	(Click Here)	1	FUEL HEATER / FILTER ASSEMBLY	EE-1
3	60433	1	HOLDER, FUSE	
4	16133	1	M6x1.0x16mm BOLT	
5	10800	1	WASHER, FLAT - .25”	
6	(Click Here)	1	COMPRESSOR, A/C	EE-1
7	(See Description)	8	10-24x1/2” BOLT **(LAWSON PART# 10374)**	
8	2411-001-1805	1	SERIES HDP20 RECEPTACLE (LADD DISTRIBUTION PART # 2411-001-1805)	
9	(See Description)	1	END OF LINE RESISTOR (LADD DISTRIBUTION PART # DTM04-2P-EP10)	
10	(See Description)	1	VENT VALVE (SUPPLIER PART # WM-2SB)	
11	(Click Here)	1	TANK, BURP - D SERIES (HI VOLUME)	UP-2
12	(Click Here)	1	ENGINE, CUMMINS L9 -STAGE V 338 HP	EE-1
13	60572-ES	1	PLATE, WIRE HOLDER	

📖See referenced page for component or assembly breakdown.

ENGINE ELECTRICAL SYSTEM
HARNESS, CAB TO ENGINE - CUMMINS STAGE V

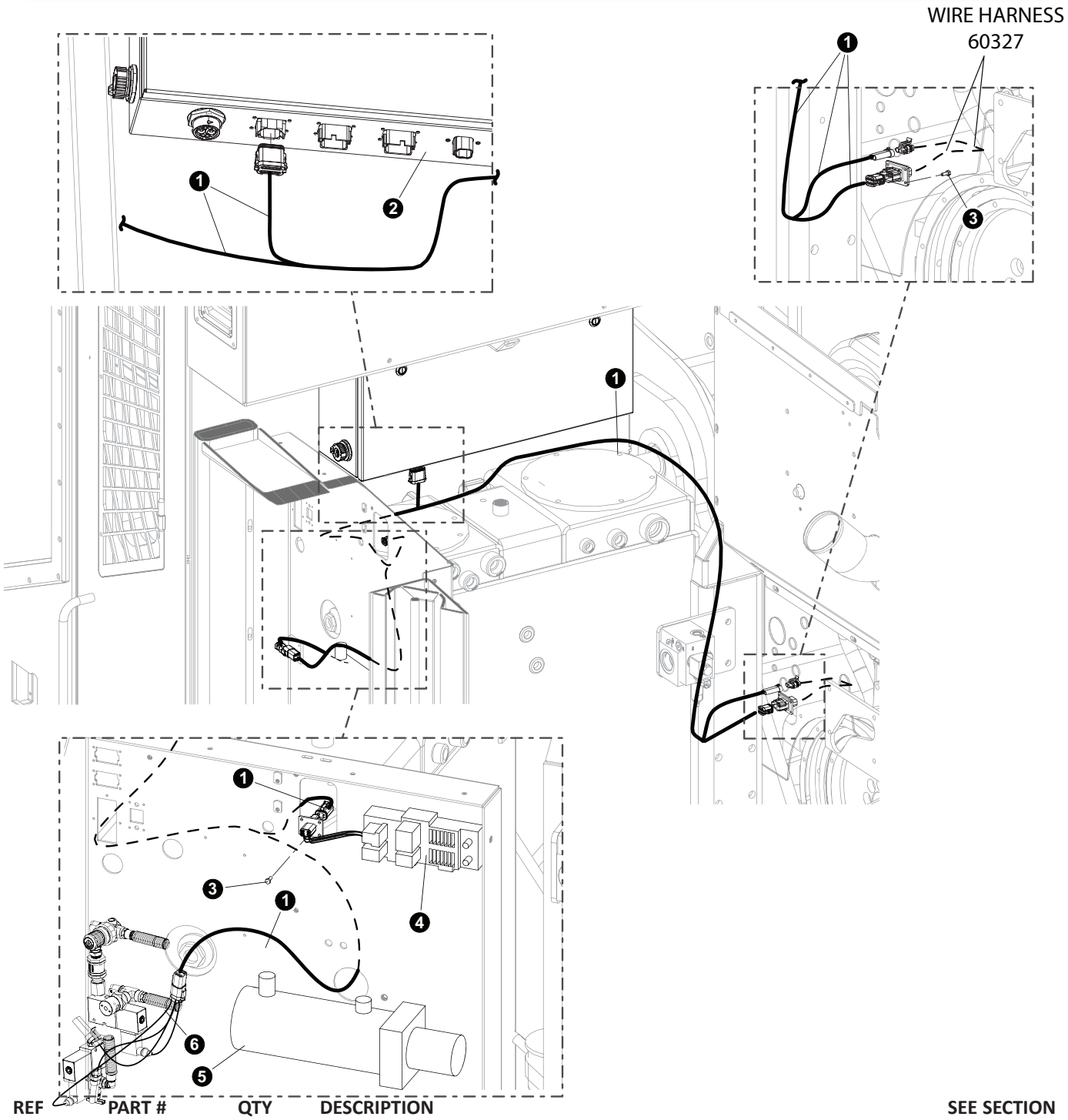

REF	PART #	QTY	DESCRIPTION	SEE SECTION
1	60330	1	HARNESS, CAB TO ENGINE - CUMMINS STG5	
2	(Click Here)	1	CAB ELECTRICAL CENTER	ES-2
3	22862	8	SCREW, MACHINE - #10-24 X .5” (BUTTON)	
4	(Click Here)	1	ENGINE ELECTRICAL CENTER	ES-1
5	(Click Here)	1	GULLWING LIFT PUMP	UP-1

📖See referenced page for component or assembly breakdown.

ENGINE ELECTRICAL SYSTEM
CUMMINS DEF TANK ELECTRICAL WIRE HARNESS

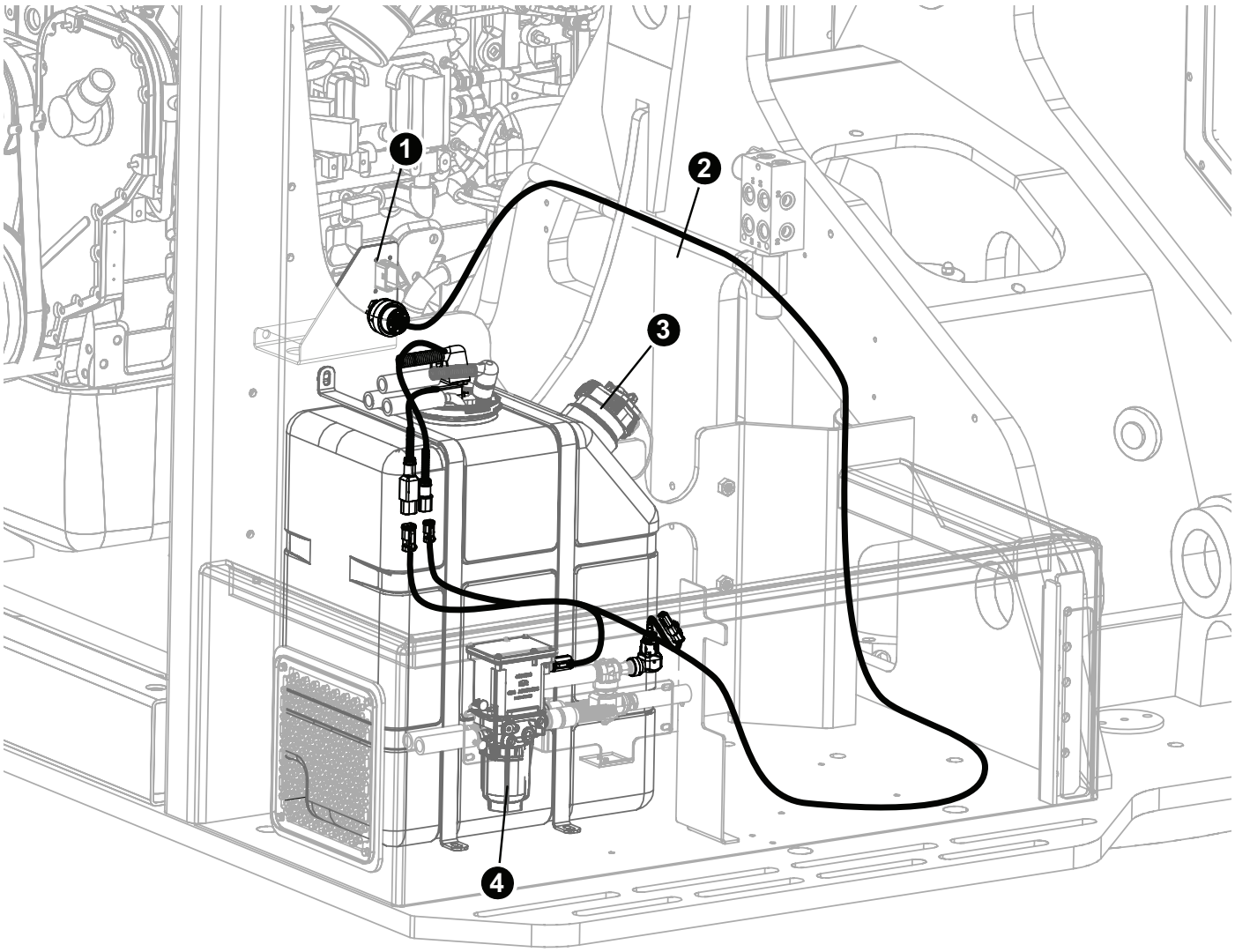

REF	PART #	QTY	DESCRIPTION	SEE SECTION
1	(Click Here)	1	ENGINE, CUMMINS L9 -STAGE V 338 HP D	EE-1
2	60328	1	HARNESS, DEF TANK - CUMMINS STG5	
3	(Click Here)	1	TANK, DEF	UP-2
4	(Click Here)	1	PUMP, DOSER	UP-2

IMPORTANT:
58057, FAN, DEF - STAGE 5 D-SERIES IS AN OBSOLETE PART. FAN IS NOT NEEDED PER SR. MANAGEMENT AND CANNOT BE REPLACED. WIRE HARNESS 58059, HARNESS, DEF FAN IS OBSOLTE AS WELL.

📖See referenced page for component or assembly breakdown.
❒Assembly that includes all items indented below.

PAGE INTENTIONALLY LEFT BLANK

SECTION ES-2
OPERATOR CAB ELECTRICAL SYSTEM

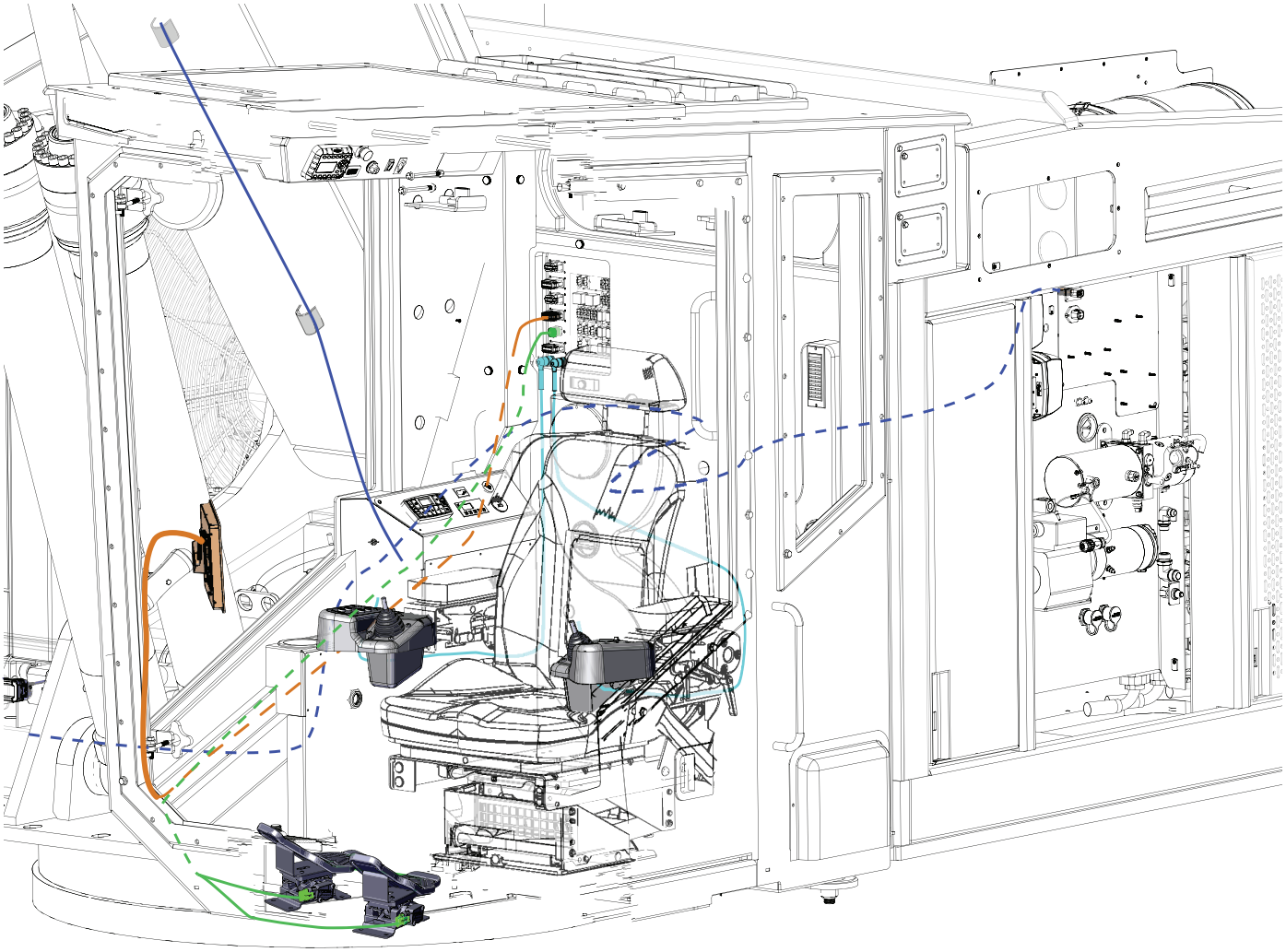

OPERATOR CAB ELECTRICAL SYSTEM
MAIN ELECTRICAL CENTER INSTALLATION

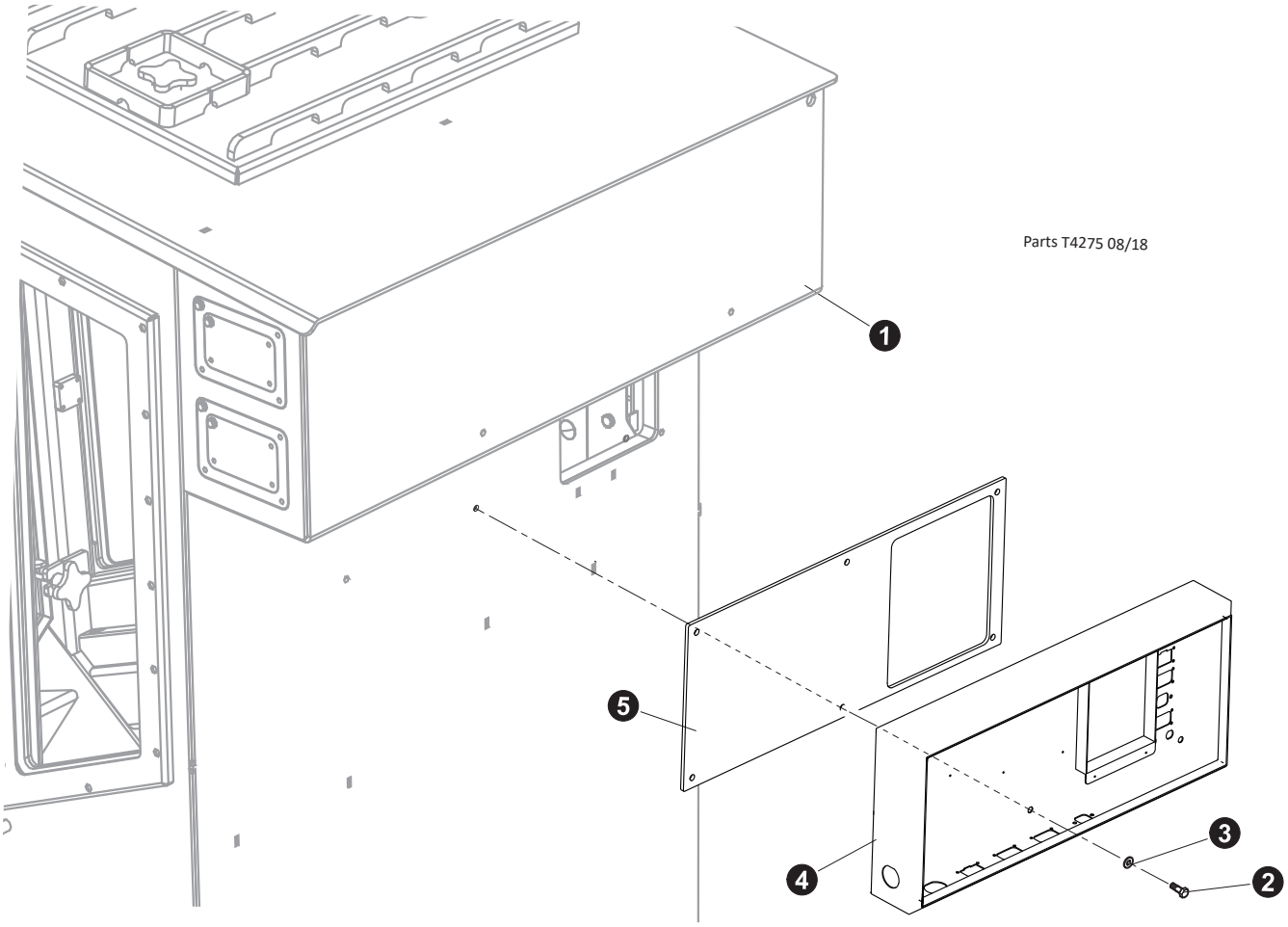

REF	PART #	QTY	DESCRIPTION	SEE SECTION
1	(Click Here)	1	🕮 OPERATOR'S CAB ASSEMBLY	OC-1
2	18309-ES	5	BOLT - .25" X 1.25"	
3	10757-ES	5	WASHER, SAE FLAT - .25"	
4	(Click Here)	1	🕮 MAIN ELECTRICAL CENTER ASSEMBLY	ES-2
5	46684-ES	1	RUBBER, CAB TO ELECRICAL BOX	

❑ Kit or Assembly - includes all items indented underneath.
🕮 See referenced page for component or assembly breakdown.

OPERATOR CAB ELECTRICAL SYSTEM
MAIN ELECTRICAL CENTER ASSEMBLY

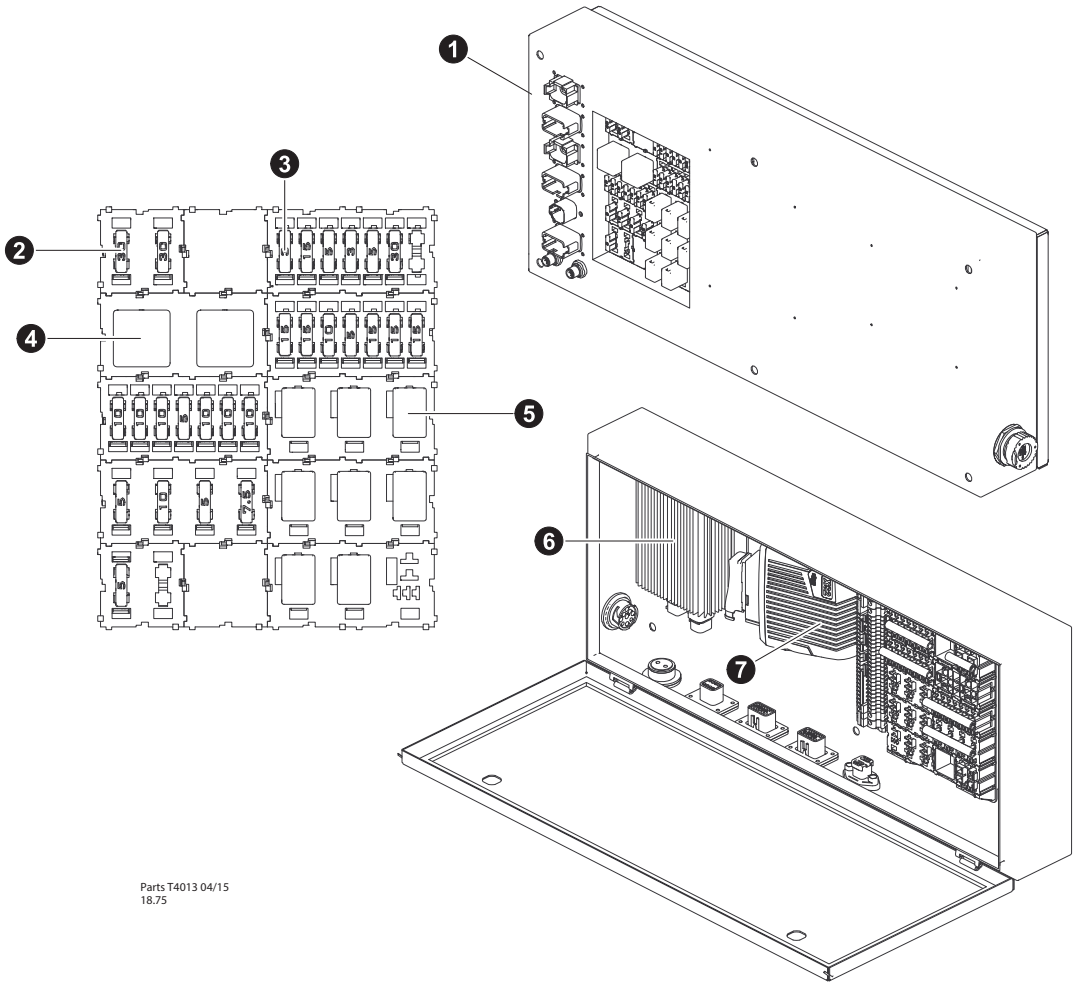

REF	PART #	QTY	DESCRIPTION	SEE SECTION
1	55189-ES	1	❑ LOAD CENTER	
2	50401-ES	2	FUSE, ATO - 30 AMP (SPADE STYLE)	
3	24511-ES	2	FUSE, ATO - 3 AMP (SPADE STYLE)	
	24533-ES	7	FUSE, ATO - 5 AMP (SPADE STYLE)	
	24534-ES	1	FUSE, ATO - 7.5 AMP (SPADE STYLE)	
	24512-ES	8	FUSE, ATO - 10 AMP (SPADE STYLE)	
	50400-ES	6	FUSE, ATO - 15 AMP (SPADE STYLE)	
	50401-ES	1	FUSE, ATO - 30 AMP (SPADE STYLE)	
4	24323-ES	2	RELAY, 896H-1CH-D-24VDC (SPDT 30/50A 24VDC)	
5	53645-ES	8	RELAY, AZ988-1C-24DE-C1 (SPDT 30A 24VDC)	
6	55483-ES	1	CONVERTER, 24V TO 12V - “C” SERIES	
7	53095-ES	1	MODULE, XA2 - IQAN	
-	51753-ES	1	KIT, ELECTRICAL- FUSE/RELAY- 830/630 24V	

❑ Kit or Assembly - includes all items indented underneath.
📖 See referenced page for component or assembly breakdown.

OPERATOR CAB ELECTRICAL SYSTEM
UPPER DASH COMPONENT INSTALLATION

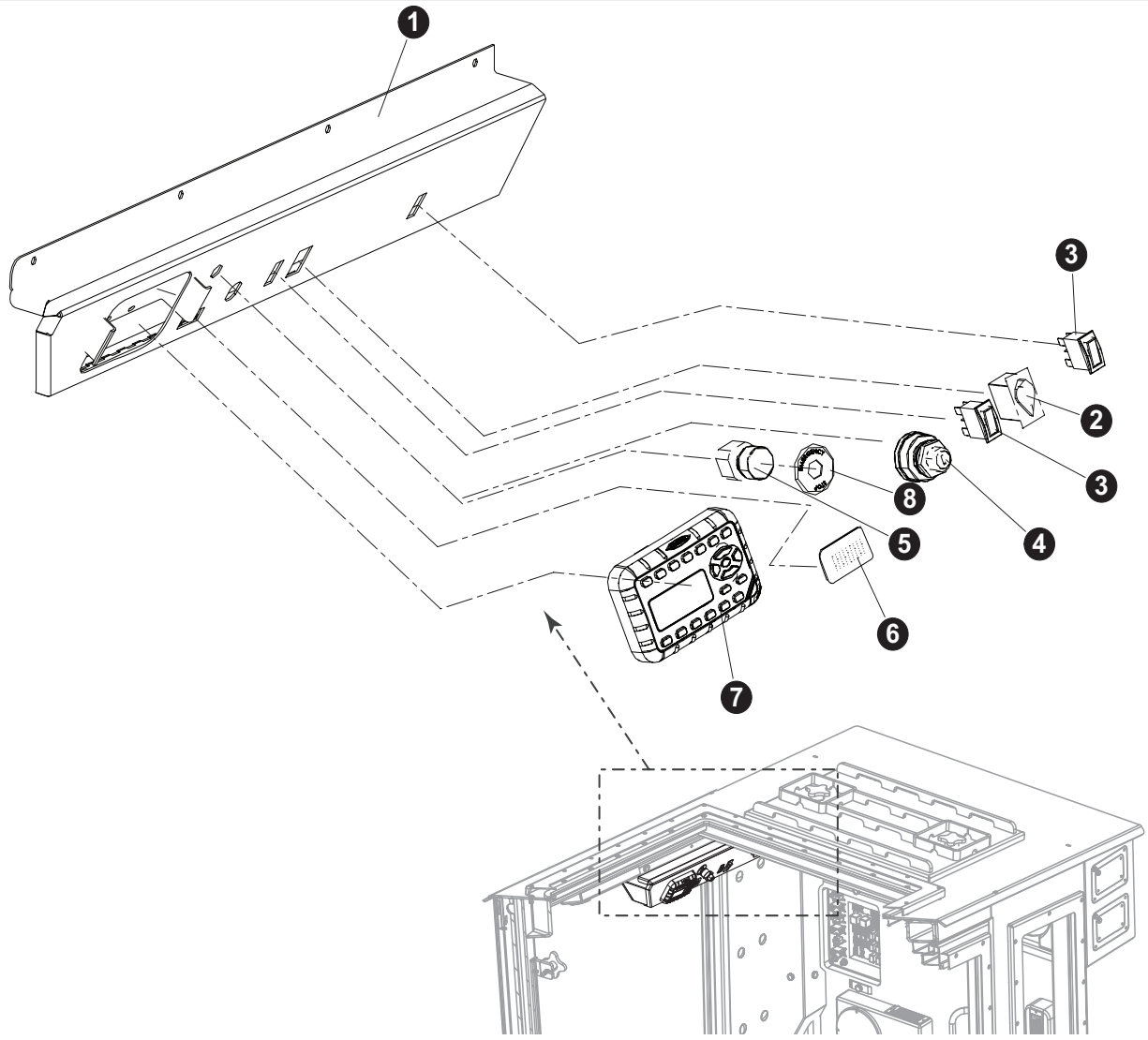

REF	PART #	QTY		DESCRIPTION	SEE SECTION
1	49540-ES	1		PANEL, UPPER WELDMENT	
2	51673-ES	1		SWITCH, VENT/ VACUUM	
3	51664-ES	1		SWITCH, LIGHT - OTTO (1 PER)	
4	52414-ES	1		SWITCH, IGNITION	
-	52417-ES	2	❑	KEY, IGNITION	
5	53242-ES	1		SWITCH, EMERGENCY STOP	
6	57876-ES	1		MICROPHONE, RADIO - D-SERIES	
7	57803-ES	1		RADIO, D SERIES W/ HANDS FREE CALLING	
8	53243-ES	1		RING, EMERGENCY STOP	

❑ Kit or Assembly - includes all items indented underneath.
📖 See referenced page for component or assembly breakdown.

OPERATOR CAB ELECTRICAL SYSTEM
UPPER DASH ASSEMBLY AND HARNESS INSTALLATION

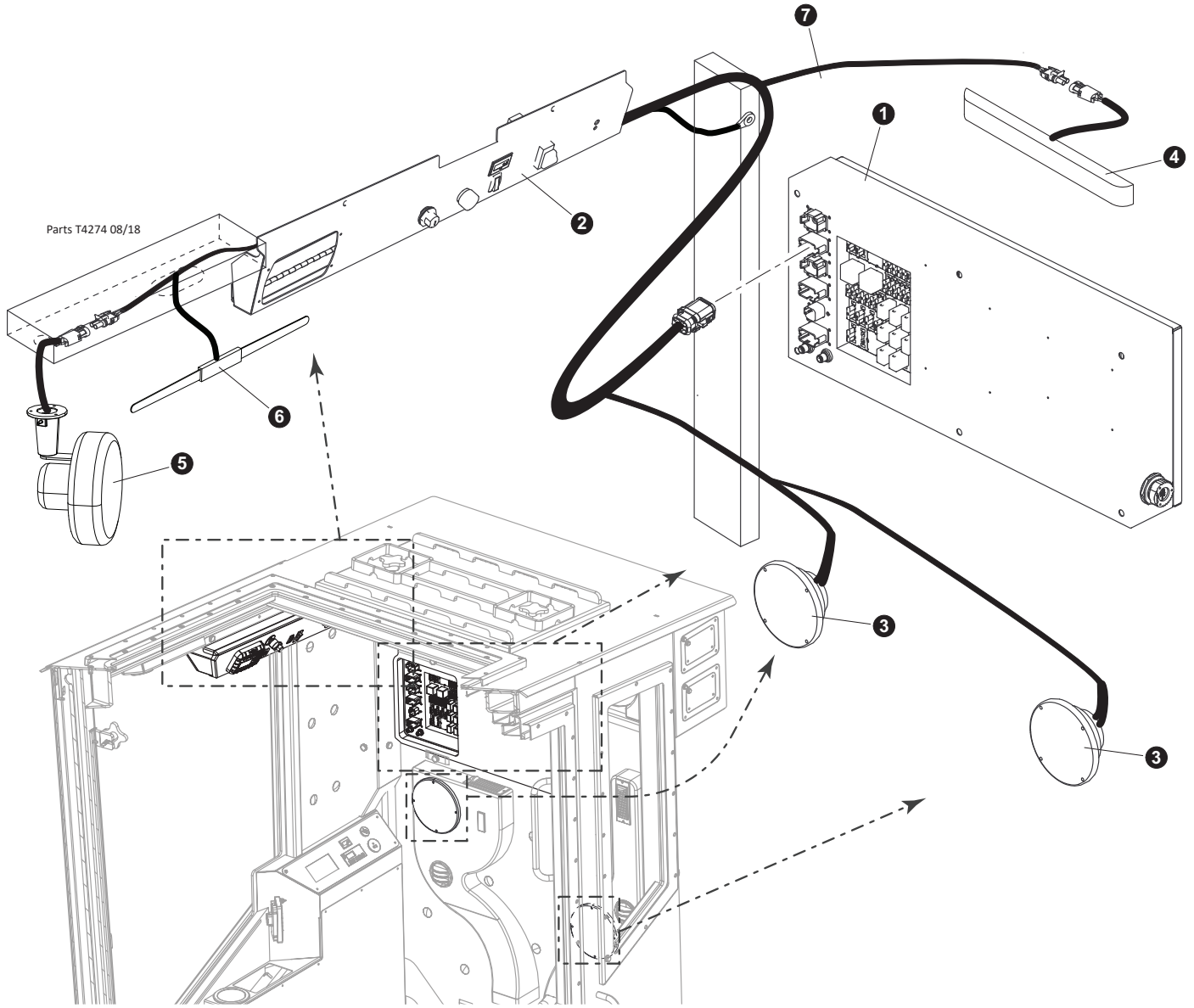

REF	PART #	QTY	DESCRIPTION	SEE SECTION
1	(Click Here)	1	🕮 MAIN ELECTRICAL CENTER ASSEMBLY	ES-2
2	(Click Here)	1	🕮 UPPER DASH ASSEMBLY.	ES-2
3	57857-ES	2	SPEAKER, CAB - D-SERIES	
4	23614-ES	1	LIGHT, DOME - 24V LED	
5	23279-ES	1	FAN, WINDSHIELD DEFROST - 24V	
6	57858-ES	1	ANTENNA, CAB - D-SERIES	
7	57737-ES	1	HARNESS, CAB - Upper DASH (D-Series)	

❑ Kit or Assembly - includes all items indented underneath.
🕮 See referenced page for component or assembly breakdown.

OPERATOR CAB ELECTRICAL SYSTEM
MAIN ENGINE ELECTRICAL HARNESS, CUMMINS STAGE V

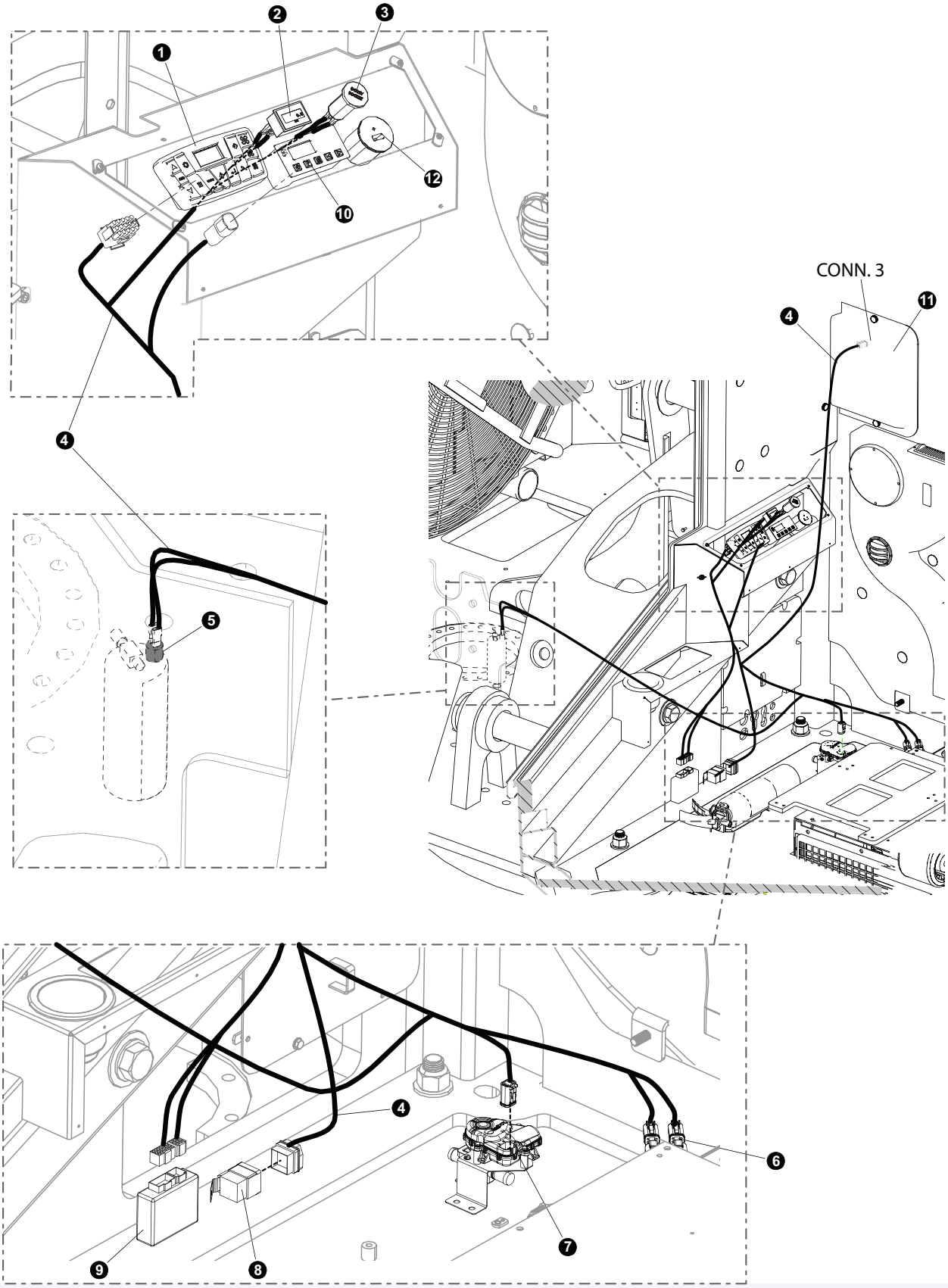

OPERATOR CAB ELECTRICAL SYSTEM
MAIN ENGINE ELECTRICAL HARNESS, CUMMINS STAGE V

REF	PART #	QTY	DESCRIPTION	SEE SECTION
1	58162-ES	1	FOX CONTROL PANEL (PART OF KIT BK1184) (BT1-9007)	
2	52401-ES	1	GAUGE, HOUR METER - CURRENT	
3	55662-ES	1	12 V DC SOCKET	
4	57861-ES	1	HARNESS, CAB - Heat A/C CONTROL (D-Series)	
5	15040-ES	1	SWITCH, BINARY - BADGER	
6	(Click Here)	1	FUEL HEATER / FILTER ASSEMBLY	EE-1
7	(Click Here)	1	WATER PUMP	OC-4
8	58078-ES	1	RELAY, HEATER/AC CONTROL - D-SERIES CAB	
9	58163-ES	1	BOARD, CONTROL - HEATER/AC (49493 KIT)	
10	(See Description)	1	ENGINE HEATER TIMER (Part # 221000341500)	
11	(Click Here)	1	CAB ELECTRICAL CENTER	ES-1
11	(Click Here)	1	COVER, CAB ELECTRICAL CENTER	OC-3
12	55401-ES	1	ADAPTER, PANEL MOUNT USB	

📖 See referenced page for component or assembly breakdown.

OPERATOR CAB ELECTRICAL SYSTEM
FORWARD AND REAR CAB LIGHT HARNESS

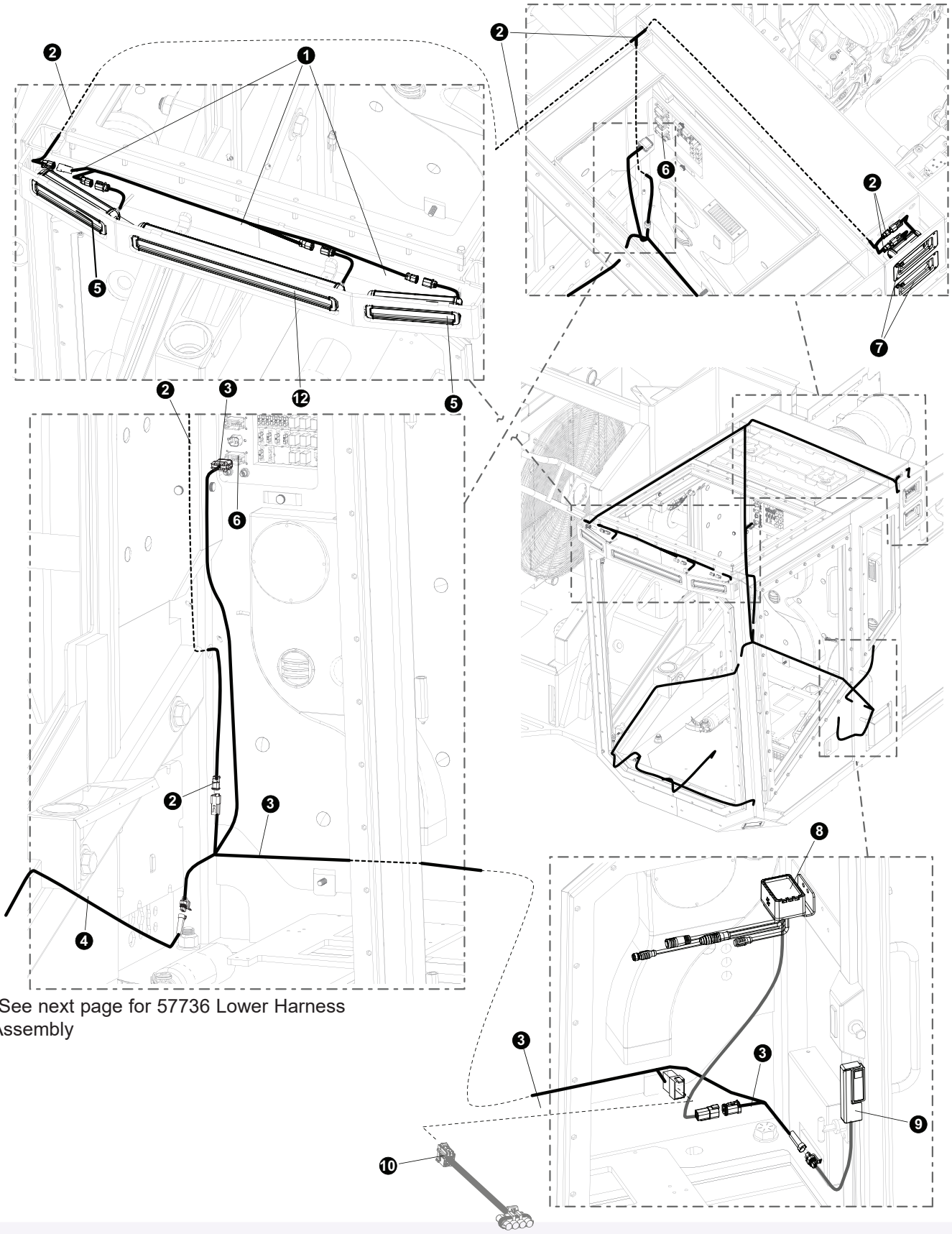

*See next page for 57736 Lower Harness Assembly

OPERATOR CAB ELECTRICAL SYSTEM
FORWARD AND REAR CAB LIGHT HARNESS

REF	PART #	QTY	DESCRIPTION	SEE SECTION
1	57736	1	HARNESS, CAB - (D-SERIES) (Cab Lights - Front Upper)	
2	57736	1	HARNESS, CAB - (D-SERIES) (Cab Lights - Upper)	
3	57736	1	HARNESS, CAB - (D-SERIES) (Cab Lights - Mid)	
4	57736	1	HARNESS, CAB - (D-SERIES) (Cab Lights - Lower)	
5	(Click Here)	1	LIGHT, BAR - LED (D-SERIES CAB) 6 LED	ES-1
6	(Click Here)	1	CAB ELECTRICAL CENTER	ES-2
7	(Click Here)	2	LIGHT, BAR - LED (D-SERIES) 3 LED	ES-1
8	(Click Here)	1	110 CONTROL MODULE	OC-5
9	55264	1	SWITCH, LIMIT - GULLWING (MAGNETIC)	
10	57935	1	HARNESS, Be-Ge Seat Adapter (Required with BeGe Seats)	
12	(Click Here)	1	LIGHT, BAR - LED (D-SERIES CAB) 15 LED	ES-1

📖 See referenced page for component or assembly breakdown.

OPERATOR CAB ELECTRICAL SYSTEM
FORWARD AND REAR CAB LIGHT HARNESS

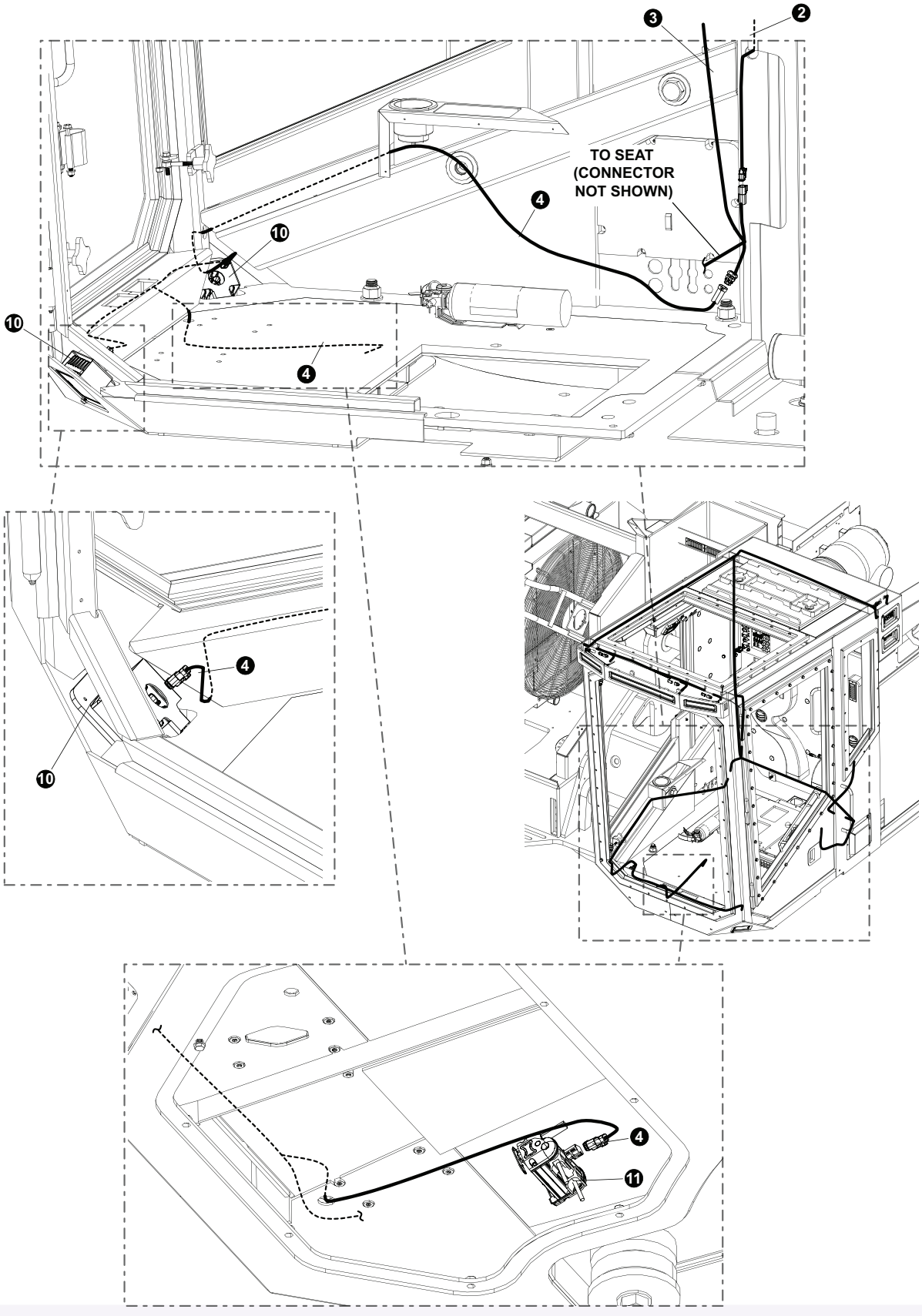

OPERATOR CAB ELECTRICAL SYSTEM
FORWARD AND REAR CAB LIGHT HARNESS

REF	PART #	QTY	DESCRIPTION	SEE SECTION
2	57736	1	HARNESS, CAB - (D-SERIES) (Cab Lights - Upper)	
3	57736	1	HARNESS, CAB - (D-SERIES) (Cab Lights - Mid)	
4	57736	1	HARNESS, CAB - (D-SERIES) (Cab Lights - Lower)	
10	(Click Here)	2	LIGHT, BOOM MOUNTED - LED LAMPS	ES-1
11	(Click Here)	1	IGHT, BAR - LED (D-SERIES CAB) 15 LED	ES-1

📖 See referenced page for component or assembly breakdown.

OPERATOR CAB ELECTRICAL SYSTEM
CAB FORWARD, REAR, AND BELLY PAN LIGHTS

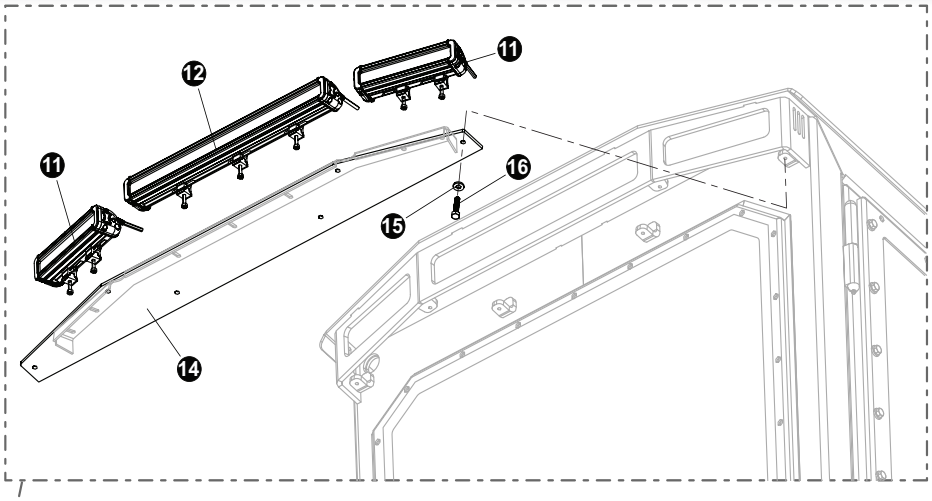

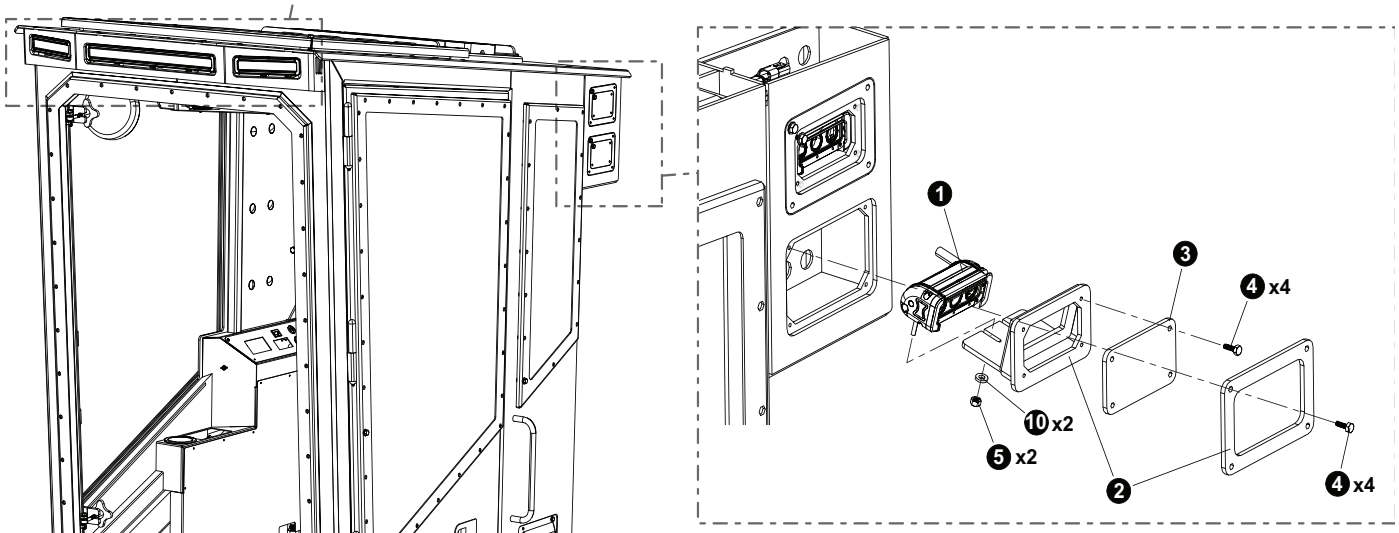

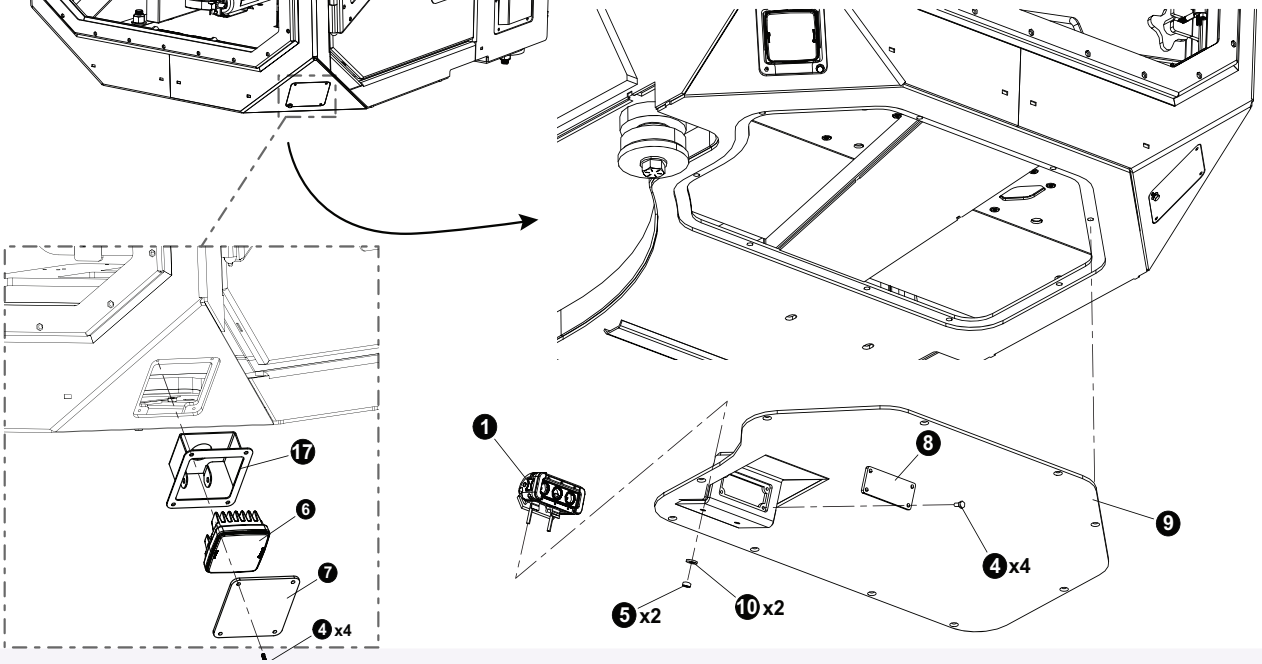

OPERATOR CAB ELECTRICAL SYSTEM
CAB FORWARD, REAR, AND BELLY PAN LIGHTS

REF	PART #	QTY	DESCRIPTION	SEE SECTION
1	57783	3	LIGHT, BAR - LED (D-SERIES) 3 LED	
2	49223	2	BRACKET, LIGHT MOUNT REAR D-SEREIS	
3	49222	2	LEXON, LIGHT - CAB REAR D-SERIES	
4	15604	28	BOLT - .25” X .75”	
5	16131	6	NUT - .25”	
6	50999	2	LIGHT, BOOM MOUNTED - LED LAMPS	
7	49224	2	LEXON, LIGHT - FRONT LOWER D-SERIES	
8	49227	2	LEXON, LIGHT - UNDER CAB D-SERIES	
9	(Click Here)	1	COVER, MOUNT - 3 LED LIGHTS D-SERIES	OC-1
10	10757	6	WASHER, .25"	
11	57782	2	LIGHT, BAR - LED (D-SERIES CAB) 6 LED	
12	57781	1	LIGHT, BAR - LED (D-SERIES CAB) 15 LED	
14	49184	1	BRKT, FORMED, FRONT LIGHT	
17	49228	1	BRACKET, LIGHT FRONT D-SERIES	

📖 See referenced page for component or assembly breakdown.

OPERATOR CAB ELECTRICAL SYSTEM
MD4 SCREEN ASSM. AND HARNESS AND FRONT DOOR LIGHTS AND HARNESS

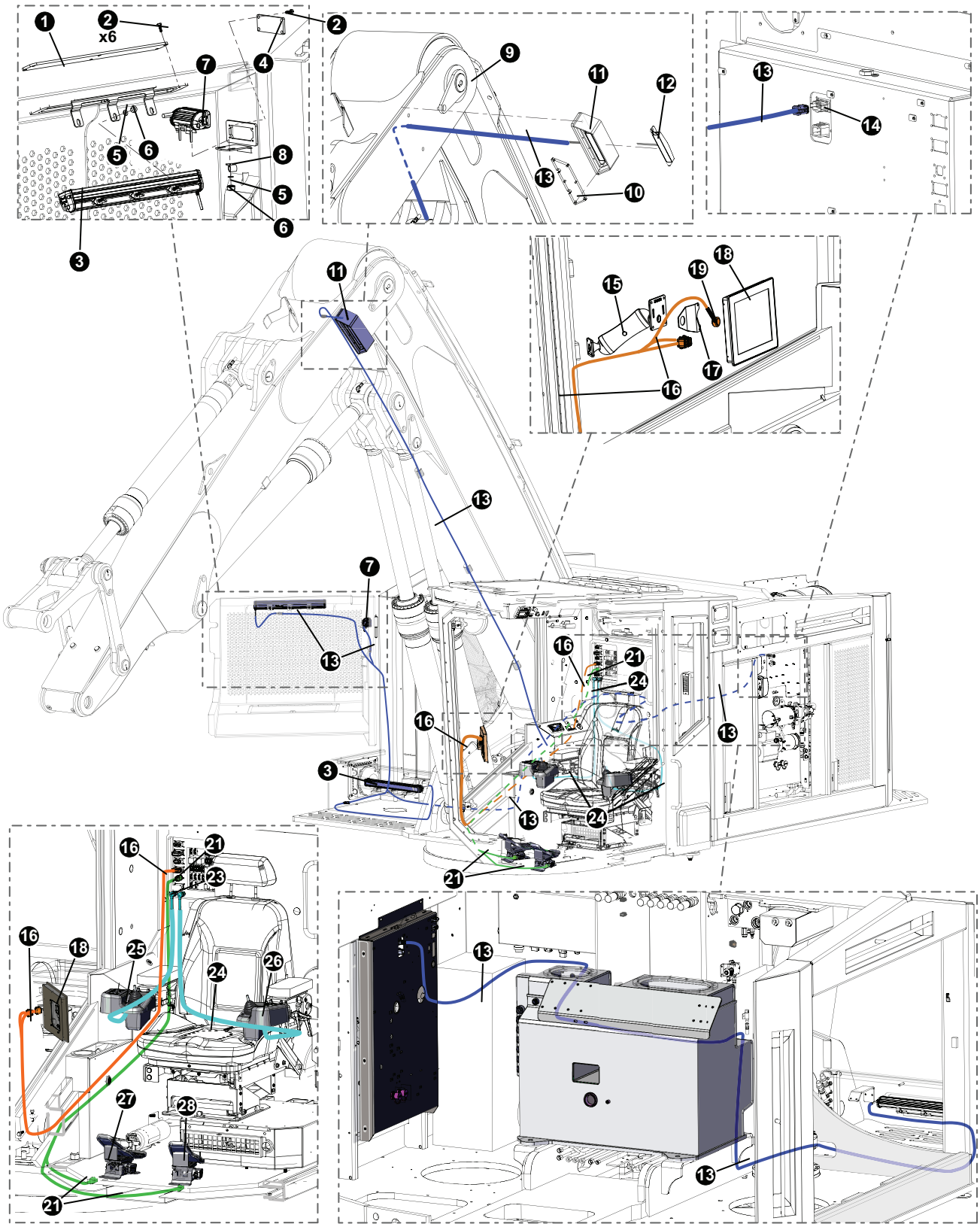

OPERATOR CAB ELECTRICAL SYSTEM
MD4 SCREEN ASSM. AND HARNESS AND FRONT DOOR LIGHTS AND HARNESS

REF	PART #	QTY	DESCRIPTION	SEE SECTION
1	60132	1	LEXAN, 15 LED LIGHT GUARD - D-MODEL	
2	15604	10	BOLT - .25” X .75”	
3	57781	2	LIGHT, BAR - LED (D-SERIES) 15 LED	
4	60133	1	LEXAN, 3 LED LIGHT GUARD - D-MODEL	
5	10757	6	WASHER, .25”	
6	16131	2	NUT, NYLOCK - #10-24	
7	57783	1	LIGHT, BAR - LED (D-SERIES) 3 LED	
8	58227	1	CLAMP, CUSHION LOOP 1/4 INCH	
9	(Click Here)	1	WELDMENT, MAIN BOOM FB - 765/775 D SERIES	EB-1
10	48362	1	GUARD, BOOM LIGHT - TL775	
11	48357	1	ASSY. BOOM LIGHT BOX - TAILSWING (includeds surround (Item 11), light fixture (Item 12), and light guard (Item 10)	
12	57384	1	LIGHT, BOOM RADIUS - LED (TL775)	
13	54542	1	HARNESS, Lights-Front Door	
14	(Click Here)	1	MAIN ELECTRICAL PANEL	ES-3
15	57240	1	MOUNT, RAM - MD4	
16	55392	1	HARNESS, MD4 Harness	
17	47502	1	PLATE, BEEPER MOUNT: MD4-1O SCREEN	
18	57385	1	MODULE, MD4 - 10” SCREEN LARGE	
19	53115	1	SIREN, WARNING - D SERIES DASH	
	53112	1	Software, Dealer MD4 (IQAN Active Studio)	
21	57758	1	HARNESS, MD4 - Track Foot Pedals 700D	
23	55420	1	HARNESS, INTERCONNECT JOYSTICK POD RH	
24	55419	1	HARNESS, INTERCONNECT JOYSTICK POD LH	
25	(Click Here)	1	RIGHT JOYSTICK CONTROL POD	
26	(Click Here)	1	LEFT JOYSTICK CONTROL POD	
27	(Click Here)	1	DRIVE PEDAL CONTOL	ES-3
28	(Click Here)	1	BRAKE PEDAL	ES-3

📖 See referenced page for component or assembly breakdown.

PAGE INTENTIONALLY LEFT BLANK

SECTION ES-3
IQAN COMPONENT ASSEMBLY

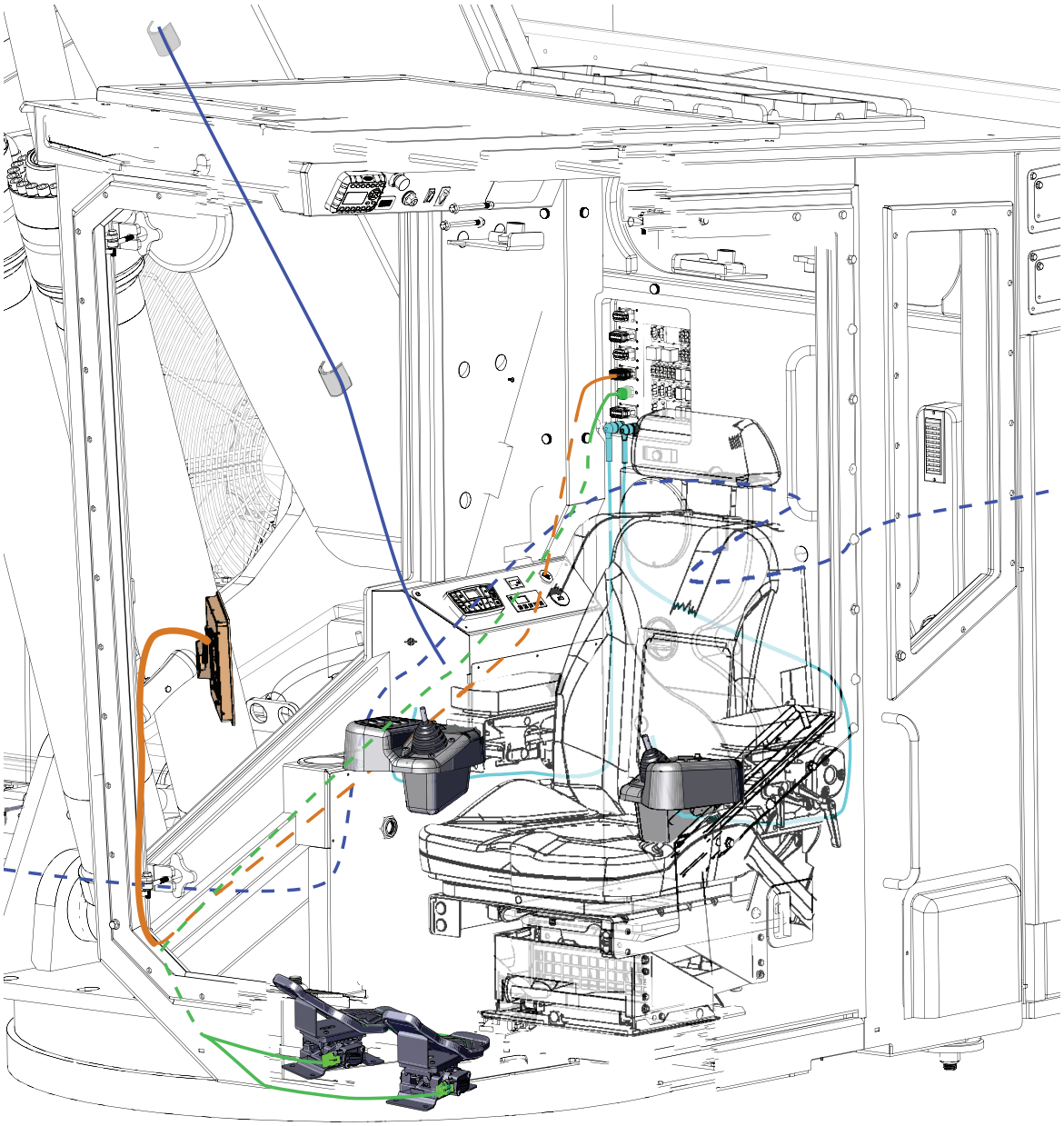

IQAN COMPONENT ASSEMBLY
IQAN LEFT AND RIGHT CONTROL PODS

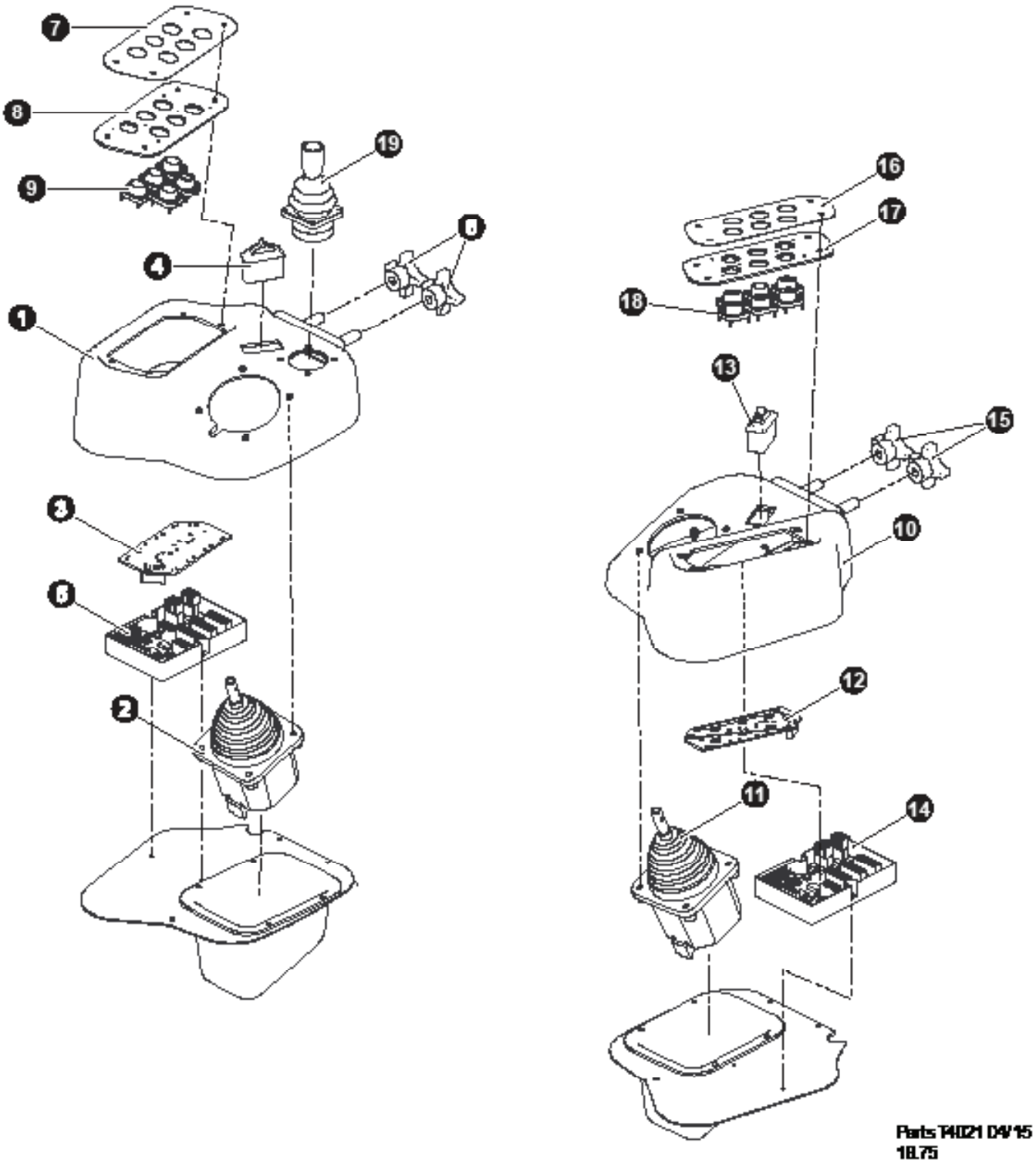

IQAN COMPONENT ASSEMBLY
IQAN LEFT AND RIGHT CONTROL PODS

REF	PART #	QTY	DESCRIPTION	SEE SECTION
1	55422	1	POD, JOYSTICK - RH (C&D RH TRACK)	
2	54126	1	JOYSTICK, MDL (P&G) CAN RIGHT	
3	55666	1	Panel, 6-Switch RIGHT Side	
4	55703	1	THUMBWHEEL - Travel Speed	
5	55707	1	BOARD, CAN DRIVER - RH (PLASTIC POD)	
6	DK-57 (Sup.#)	2	KNOB,	
7	M13355-227 (Sup.#)	1	COVER, SWITCHES	
8	M13355-231 (Sup.#)	1	SPACER, SWITCHES	
9	M13361 (Sup.#)	1	BUTTON, BLANK	
-	M13361-009 (Sup.#)	1	BUTTON, DISC SAW	
-	M13361-010 (Sup.#)	1	BUTTON, MOTOR SHIFT	
10	55417	1	POD, JOYSTICK - LH (C&D SERIES) WHEEL/TRACK	
11	54125	1	JOYSTICK, MDL (P&G) CAN LEFT	
12	55667	1	Panel, 6-Switch LEFT Side	
13	55703	1	THUMBWHEEL - Engine Speed	
14	55708	1	BOARD, CAN DRIVER - LH (PLASTIC POD)	
15	DK-57 (Sup.#)	2	KNOB,	
16	M13355-227 (Sup.#)	1	COVER, SWITCHES	
17	M13355-231 (Sup.#)	1	SPACER, SWITCHES	
18	M13361 (Sup.#)	1	BUTTON, BLANK	
-	M13361-004 (Sup.#)	1	BUTTON, ARMING	
-	M13361-005 (Sup.#)	1	BUTTON, CHARGE HEATER	
-	M13361-003 (Sup.#)	1	BUTTON, PARKING BRAKE	
-	M13361-006 (Sup.#)	1	BUTTON, HORN	
-	M13361-007 (Sup.#)	1	BUTTON, AUTO THROTTLE	
19	57423	1	JOYSTICK, STEER - PLASTIC POD	

📖 See referenced page for component or assembly breakdown.
❑ Kit or Assembly - includes all items indented underneath.
⌘ Included in repair kit

IQAN COMPONENT ASSEMBLY
HAND CONTROL BREAKDOWN

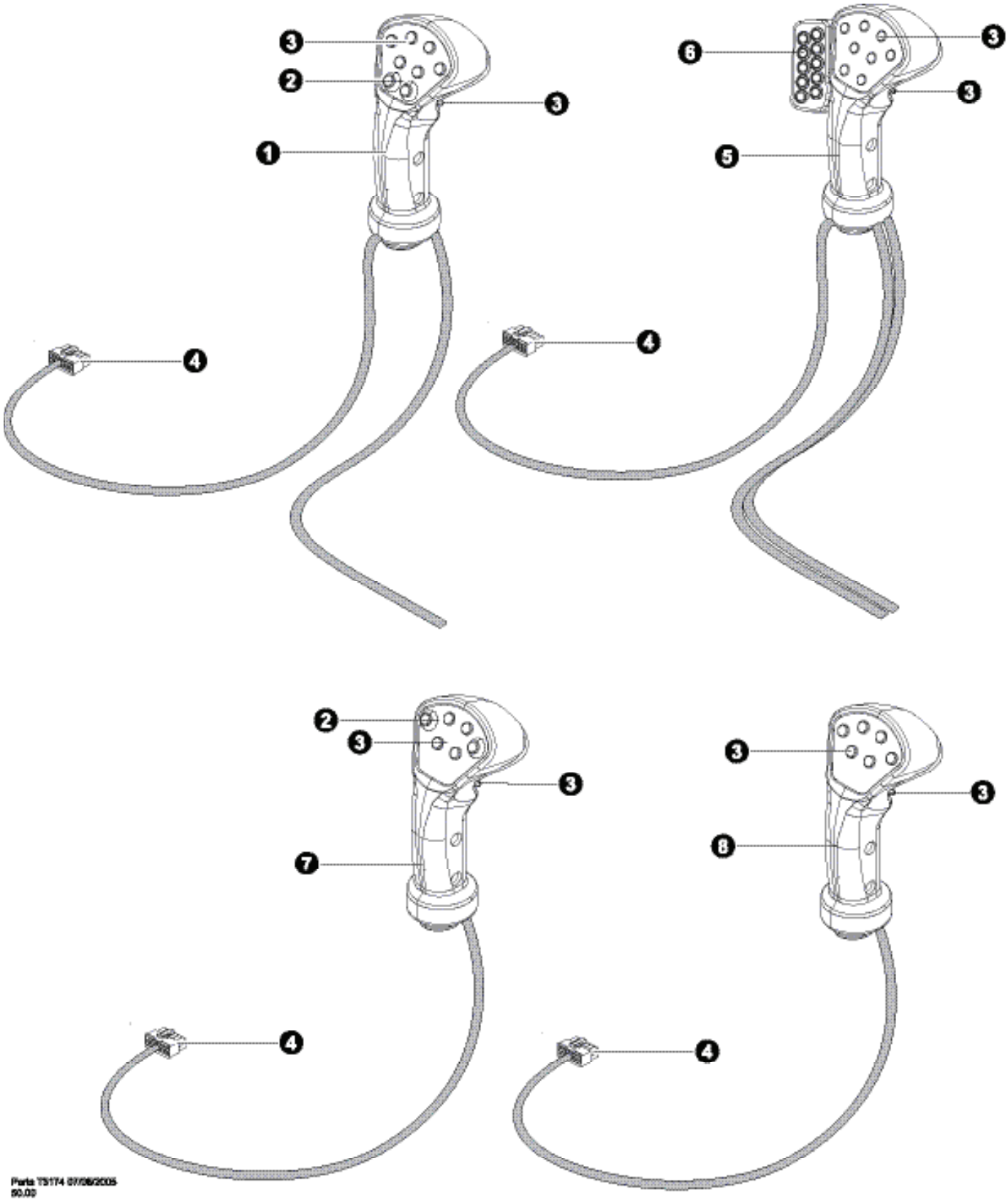

IQAN COMPONENT ASSEMBLY
HAND CONTROL BREAKDOWN

REF	PART #	QTY	DESCRIPTION	SEE SECTION
1	51567-ES	1	HAND CONTROL, SURE GRIP - LH (LOGMAX)	
2	51947-ES	2	SWITCH, PUSH BUTTON REPAIR KIT (PROPORTIONAL)	
-	52094-ES	2	KIT, REPAIR - PROPORTIONAL BUTTON COVER	
3	20961-ES	8	SWITCH, PUSH BUTTON (DIGITAL)	
4	039012120 (Sup.#)	1	CONNECTOR, PLUG - 12 PIN MOLEX	
5	51566-ES	1	HAND CONTROL, SURE GRIP - RH W/KEYPAD (LOGMAX)	
6	52095-ES	10	SWITCH, PUSH BUTTON (SURE GRIP KEYPAD)	
7	55656-ES	1	HAND CONTROL, UPPER - SURE GRIP - Digital and Proportional	
8	55655-ES	1	HAND CONTROL, UPPER - SURE GRIP - Digital Buttons Only	

📖 See referenced page for component or assembly breakdown.
❑ Kit or Assembly - includes all items indented underneath.
⌘ Included in repair kit

PAGE INTENTIONALLY LEFT BLANK

SECTION DH-1

TRACK DRIVE HYDRAULICS ASSEMBLY AND INSTALLATION

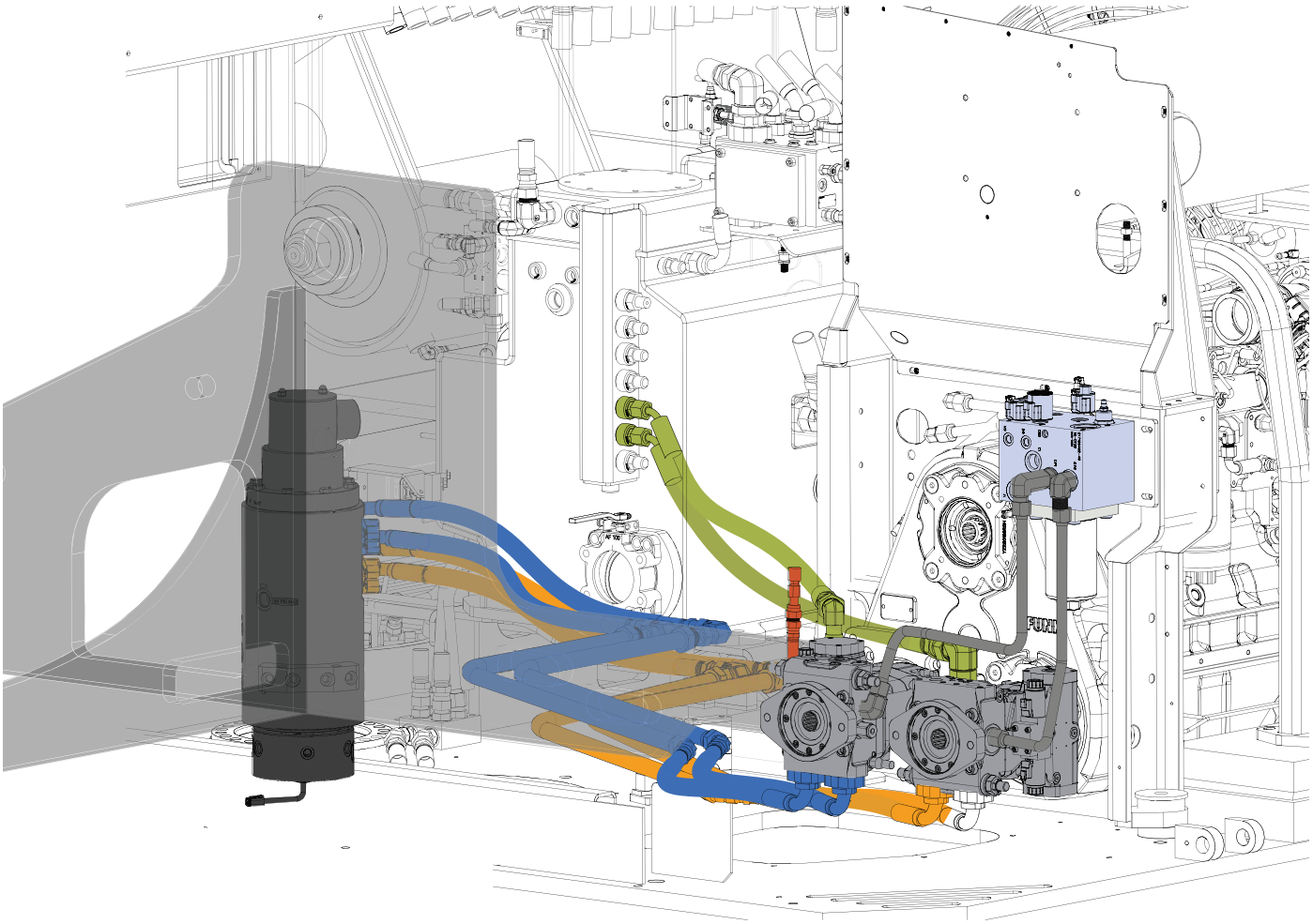

DRIVE HYDRAULICS ASSEMBLY AND INSTALLATION

TL-775 CHARGE MANIFOLD PRESSURE AND DRAINAGE ASSEMBLY AND INSTALLATION

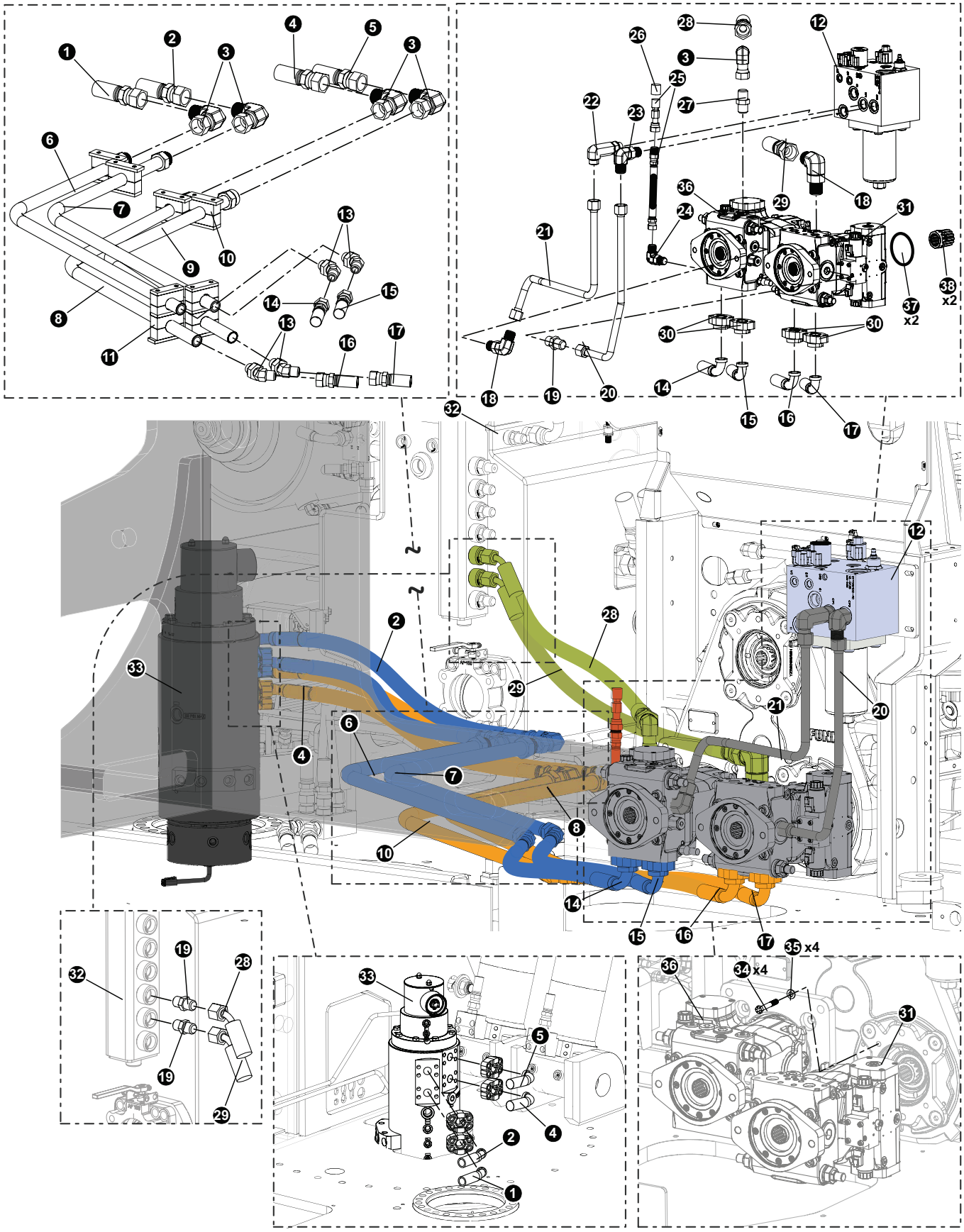

DRIVE HYDRAULICS ASSEMBLY AND INSTALLATION

TL-775 CHARGE MANIFOLD PRESSURE AND DRAINAGE ASSEMBLY AND INSTALLATION

REF	PART #	QTY	DESCRIPTION	SEE SECTION
1	58179 (Kit #)	1	HOSE ASSEMBLY - **P#: 797TC-29-16-16OS-16PH9** (Drive Line to RM11)	
2	58179 (Kit #)	1	HOSE ASSEMBLY - **P#: 797TC-33-16-16OS-16PH9** (Drive Line to RM12)	
3	17682	4	SWIVEL, 16 ORFS 90 16 C6LO	
4	58179 (Kit #)	1	HOSE ASSEMBLY - **P#: 797TC-36-16-16OS-16PH9** (Drive Line to RM 9)	
5	58179 (Kit #)	1	HOSE ASSEMBLY - **P#: 797TC-42.5-16-16OS-16PH9** (Drive Line to RM10)	
6	57254	1	TUBELINE, TRACK DRIVE - 775D	
7	57253	1	TUBELINE, TRACK DRIVE - 775D	
8	57252	1	TUBELINE, TRACK DRIVE - 775D	
9	57251	1	TUBELINE, TRACK DRIVE - 775D	
10	48686	4	WELDMENT, MID DRIVELINE CLAMPS - 775	
11	52372	2	CLAMP, STEEL TUBELINES (WHEEL DRIVE) SMALL	
12	(Click Here)	1	CHARGE / COOLER MANIFOLD	UP-2
13	16460	4	ELBOW, 45 - FF2068T-1616S	
14	58179 (Kit #)	1	HOSE ASSEMBLY - **P#: 797TC16-16-16OS-16PH9** (Left Drive Line to Tube)	
15	58179 (Kit #)	1	HOSE ASSEMBLY - **P#: 797TC20.5-16-16OS-16PH9** (Left Drive Line to Tube)	
16	58179 (Kit #)	1	HOSE ASSEMBLY - **P#: 797TC25-16-16OS-16PH9** (Right Drive Line to Tube)	
17	58179 (Kit #)	1	HOSE ASSEMBLY - **P#: 797TC29-16-16OS-16PH9** (Right Drive Line to Tube)	
18	53032	1	ELBOW, 90 - 12 JIC X 10 ORB	
19	15494	1	CONNECTOR, STR - 6400-12-10	
20	57924	1	TUBELINE, FA2 TO RIGHT TRACK PUMP	
21	57925	1	TUBELINE, FA1 TO LEFT TRACK PUMP	
22	57444	1	FITTING, 12 CC5OLO-S	
23	17688	1	ELBOW, 90 - FF1868T-1212S	
24	16540	1	ELBOW, 90 - FF1868T-0404S	
25	58063	1	HOSE ASSEMBLY - **P#: YHTBJSJOO4O4O4-10-SPL** (Gauge Port Hose)	
26	57819	1	TAP, GAUGE PORT - #4 SAE Oring Boss- ST	
27	15225	1	CONNECTOR, STR - FF1852T-1616S	
28	58179 (Kit #)	1	HOSE ASSEMBLY - **P#: 187TC30-12-12OS-12O4** (Left Drive Pump Case Drain to Tank)	
29	58179 (Kit #)	1	HOSE ASSEMBLY - **P#: 187TC42-12-12OS-12O4** (Left Drive Pump Case Drain to Tank)	
30	15113	4	KIT, SPLIT FLANGE - 1” (CODE 62)	
31	(Click Here)	1	TRACK DRIVE PUMP	DH-2
32	(Click Here)	1	HYDRAULIC TANK ASSEMBLY	UP-2
33	(Click Here)	1	Rotatry Manifold	UP-2
34	50100	8	BOLT - .5” X 1.25”	
35	10804	8	WASHER, FLAT - .5”	
36	(Click Here)	1	TRACK DRIVE PUMP	DH-2
37	53718	2	ORING, track drive pump pilot	
38	54767	2	ADAPTER, PUMP PAD - SAE C - TRACK PUMP	

DRIVE HYDRAULICS ASSEMBLY AND INSTALLATION

TL-775 MOTORSHIFT AND PARKING BRAKE HYDRAULICS ASSEMBLY AND INSTALLATION

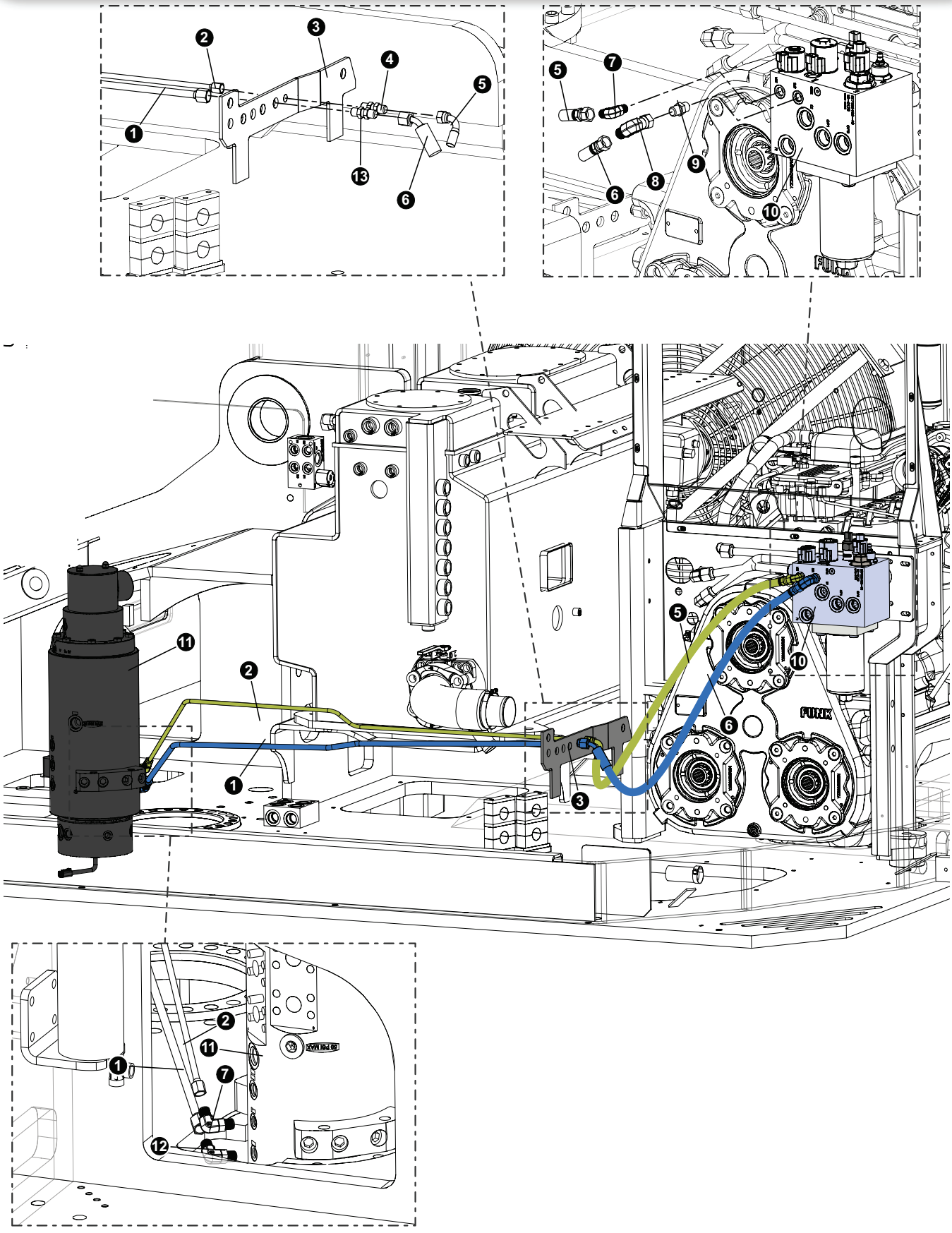

DRIVE HYDRAULICS ASSEMBLY AND INSTALLATION

TL-775 MOTORSHIFT AND PARKING BRAKE HYDRAULICS ASSEMBLY AND INSTALLATION

REF	PART #	QTY	DESCRIPTION	SEE SECTION
1	57276	1	TUBELINE, RM #1 TO BRAKE BULKHEAD	
2	57275	1	TUBELINE, RM #3 TO MOTOR SHIFT BULKHEAD	
3	(Click Here)	1	775 Upper Turntable	UP-1
4	18582	1	CONNECTOR, STR BULKHEAD - FF1994T-0404S	
5	(See Description)	1	HOSE ASSEMBLY - **P#: 387TC58 04-04OS-04J4-W** (Upperturntable BH to Charge/ Cooler Maninfold)	
6	(See Description)	1	HOSE ASSEMBLY - **P#: 387TC58 06-06OS-06J4-W** (Upperturntable BH to Charge/ Cooler Maninfold)	
7	15133	2	ELBOW, 90 - FF1868T-0406S	
8	20035	1	ELBOW, 90 SWIVEL - 6 C6LO-S	
9	18034	1	CONNECTOR, STR - FF1852T-0606S	
10	(Click Here)	1	MANIFOLD, CHARGE / COOLER - D Silver	UP-3
11	(Click Here)	1	Rotary Maninfold	UP-1
12	22405	1	ELBOW, 90 - 8-6 C5OLO-S	
13	50420	1	CONNECTOR, STR BULKHEAD - 832-TT-06	

PAGE INTENTIONALLY LEFT BLANK

SECTION DH-2

TRACK DRIVE HYDRAULICS ASSEMBLY AND INSTALLATION

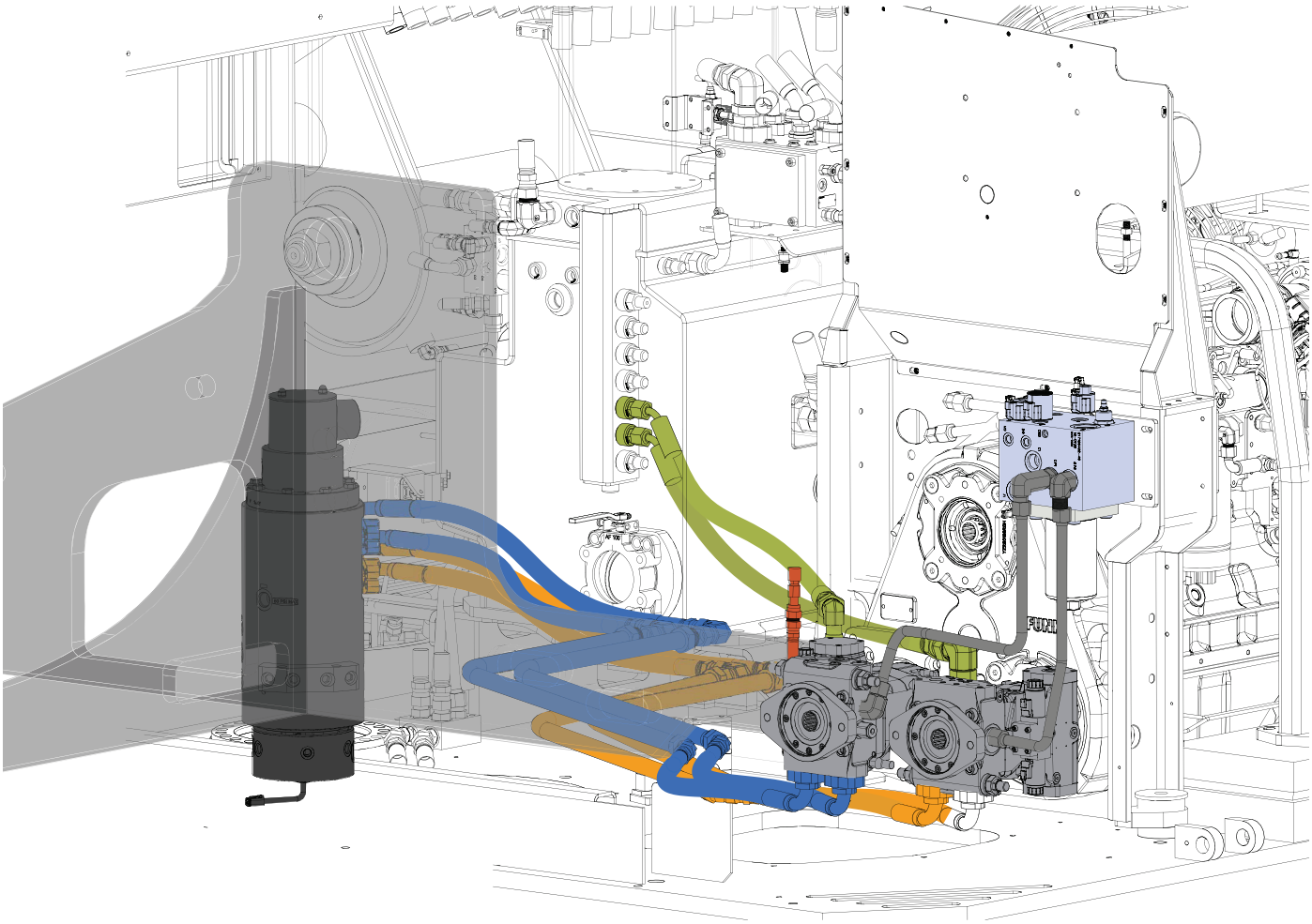

TRACK DRIVE PUMP - AA4VG90
FORWARD CAST HOUSING COMPONENTS

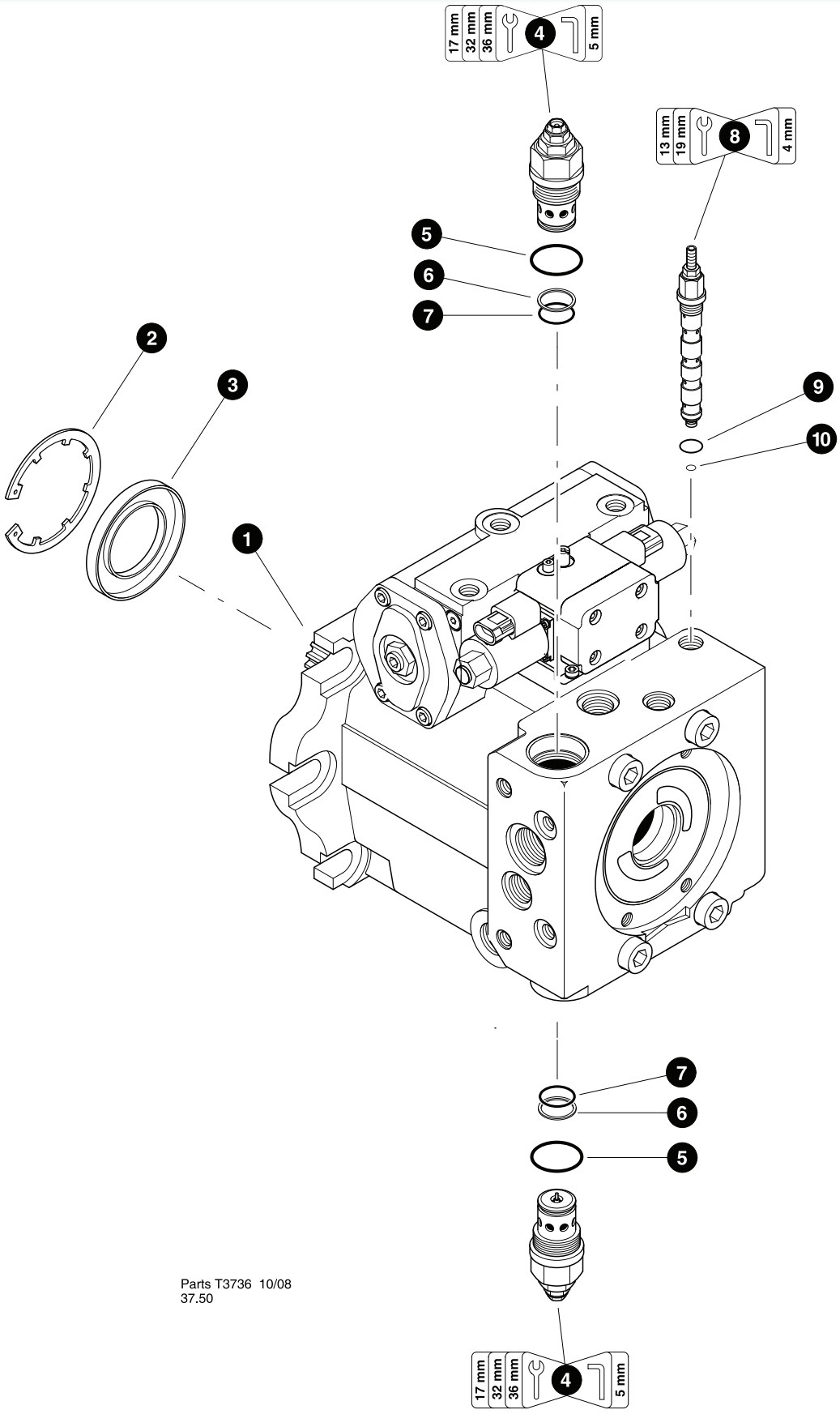

Parts T3736 10/08
37.50

TRACK DRIVE PUMP - AA4VG90
FORWARD CAST HOUSING COMPONENTS

REF	PART #	QTY		DESCRIPTION	SEE SECTION
1	55458-DH	1	❑	PUMP, TRACK DRIVE - (LH) VTG90	
	52539-DH	1	❑	PUMP, TRACK DRIVE - (RH) VTG90	
2	53726-DH	1		RING, seal retaining (R902600001)	
3	53727-DH	1	⌘	SEAL, shaft (R909830978)	
4	53724-DH	2	❑	CARTRIDGE, high pressure relief valve R902602249	
5	-DH	1	⌘	O-RING, HPRV cartridge (Body)	
6	-DH	1	⌘	RING, back-up - HPRV cartridge (Chamber)	
7	-DH	1	⌘	O-RING, HPRV cartridge (Chamber)	
8	53725-DH	1	❑	CARTRIDGE, POR relief valve R909437084	
9	-DH	1	⌘	O-RING, POR relief valve cartridge (Body)	
10	-DH	1	⌘	O-RING, POR relief valve cartridge (Chamber)	
-	53640-DH	1		KIT, SEAL REPAIR -TRACK DRIVE PUMP-VTG90	

Note:

Due to warranty policy restrictions imposed by TimberPro's component suppliers, it is not recommended that the component be disassembled further than is shown in the illustration.

🕮 See referenced page for component breakdown.
❑ Kit or Assembly - includes all items indented underneath.
⌘ Included in seal repair kit Part # 53640-WD

TRACK DRIVE PUMP - AA4VG90
STROKE CONTROL ASSEMBLY

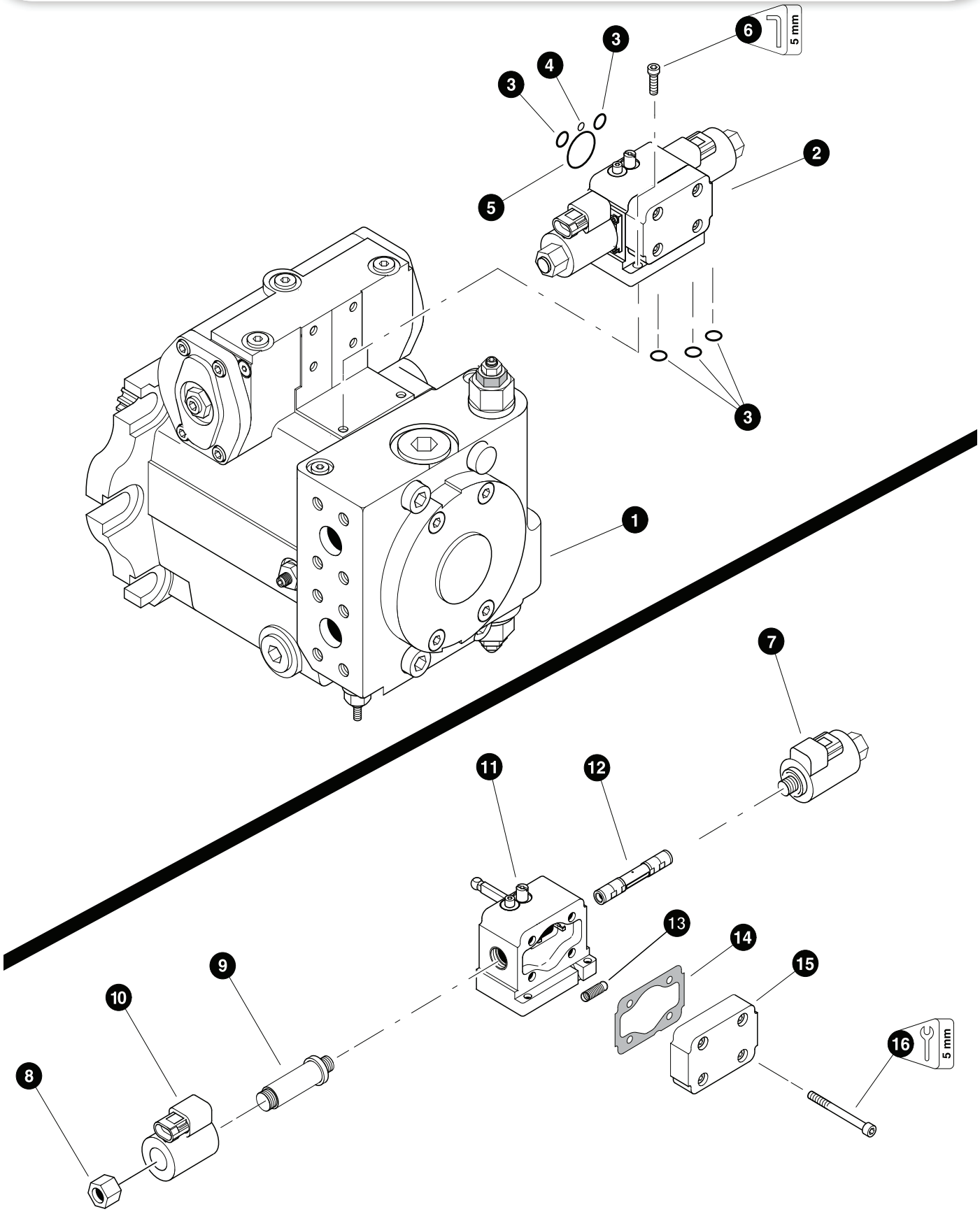

TRACK DRIVE PUMP - AA4VG90
STROKE CONTROL ASSEMBLY

REF	PART #	QTY		DESCRIPTION	SEE SECTION
1	(Click Here)	1	🕮	TRACK DRIVE PUMP -	DH-2-1
2	53729-DH	1	❑	VALVE, STROKE CONTROL - AA4VG90 24V	
3	-DH	5	⌘	O-RING, stroke control	
4	-DH	1	⌘	O-RING, stroke control	
5	-DH	1	⌘	O-RING, stroke control	
6	-DH	2		BOLT, allen head - 6mm x 20mm	
7	53730-DH	2		SOLENOID, CONTROL Assembly - AA4VG90	
8	-DH	2		NUT, coil stem	
9	-DH	2		COIL STEM	
10	-DH	2		COIL, solenoid - 24V	
11	-DH	1		CONTROL MODULE - AA4VG90 24V (R902106746)	
12	-DH	1		CONTROL PISTON (R902107090)	
13	-DH	1		SPRING, stroke centering (R902068150)	
14	-DH	1	⌘	GASKET, (R902066611)	
15	-DH	1		COVER, (R902107492)	
16	-DH	4		BOLT, allen head - 6mm (R909085831)	
-	53640-DH	1		KIT, SEAL REPAIR -TRACK DRIVE PUMP-VTG90	

Note:
Due to warranty policy restrictions imposed by TimberPro's component suppliers, it is not recommended that the component be disassembled further than is shown in the illustration.

🕮 See referenced page for component breakdown.
❑ Kit or Assembly - includes all items indented underneath.
⌘ Included in seal repair kit Part # 53640-WD

TRACK DRIVE PUMP - AA4VG90

THRU DRIVE COMPONENTS

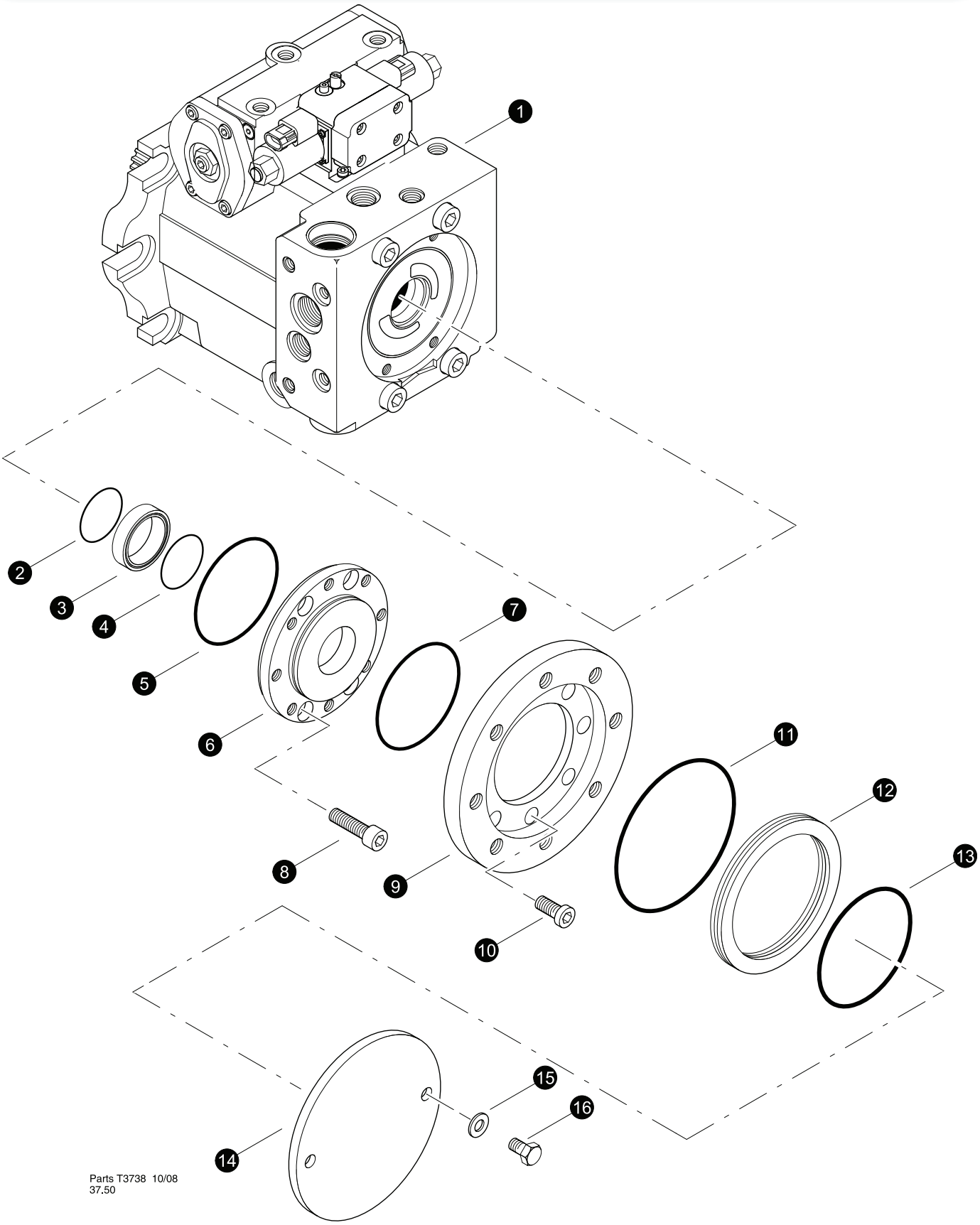

TRACK DRIVE PUMP - AA4VG90
THRU DRIVE COMPONENTS

REF	PART #	QTY		DESCRIPTION	SEE SECTION
1	(Click Here)	1	🕮	TRACK DRIVE PUMP	DH-2-1
2	R909084484	1	⌘	O-Ring	
3	R9094430651	1		SEAL RING	
4	R909084484	1	⌘	O-Ring	
5	21624-DH	1	⌘	O-RING, CHARGE PUMP PILOT (AA4VG90)	
6	R902077958	1		COVER, Pump AA4VG90	
7	57807-DH	1	⌘	ORING, THRU-DRIVE 52539 POS 1	
8	R909083060	4		Bolt,	
9	R909444589	1		FLANGE, Intermediate	
10	R909083189	6		Bolt	
11	57808-DH	1	⌘	ORING, THRU-DRIVE 52539 POS 2	
12	R909431554	1		RING, Centering	
13	57809-DH	1	⌘	ORING, THRU-DRIVE 52539 POS 3	
14	18414-DH	1		COVER, THRU DRIVE - REXROTH	
15	18040-DH	2		WASHER, flat - .5”	
16	10783-DH	2		BOLT - .5” X 1”	
-	53640-DH	1		KIT, SEAL REPAIR -TRACK DRIVE PUMP-VTG90 R909830978	

Note:

Due to warranty policy restrictions imposed by TimberPro’s component suppliers, it is not recommended that the component be disassembled further than is shown in the illustration.

🕮 See referenced page for component breakdown.
❑ Kit or Assembly - includes all items indented underneath.
⌘ Included in seal repair kit Part # 53640-WD

PAGE INTENTIONALLY LEFT BLANK

SECTION FH-1
FELLER BUNCHER HYDRAULICS ASSEMBLY AND INSTALLATION

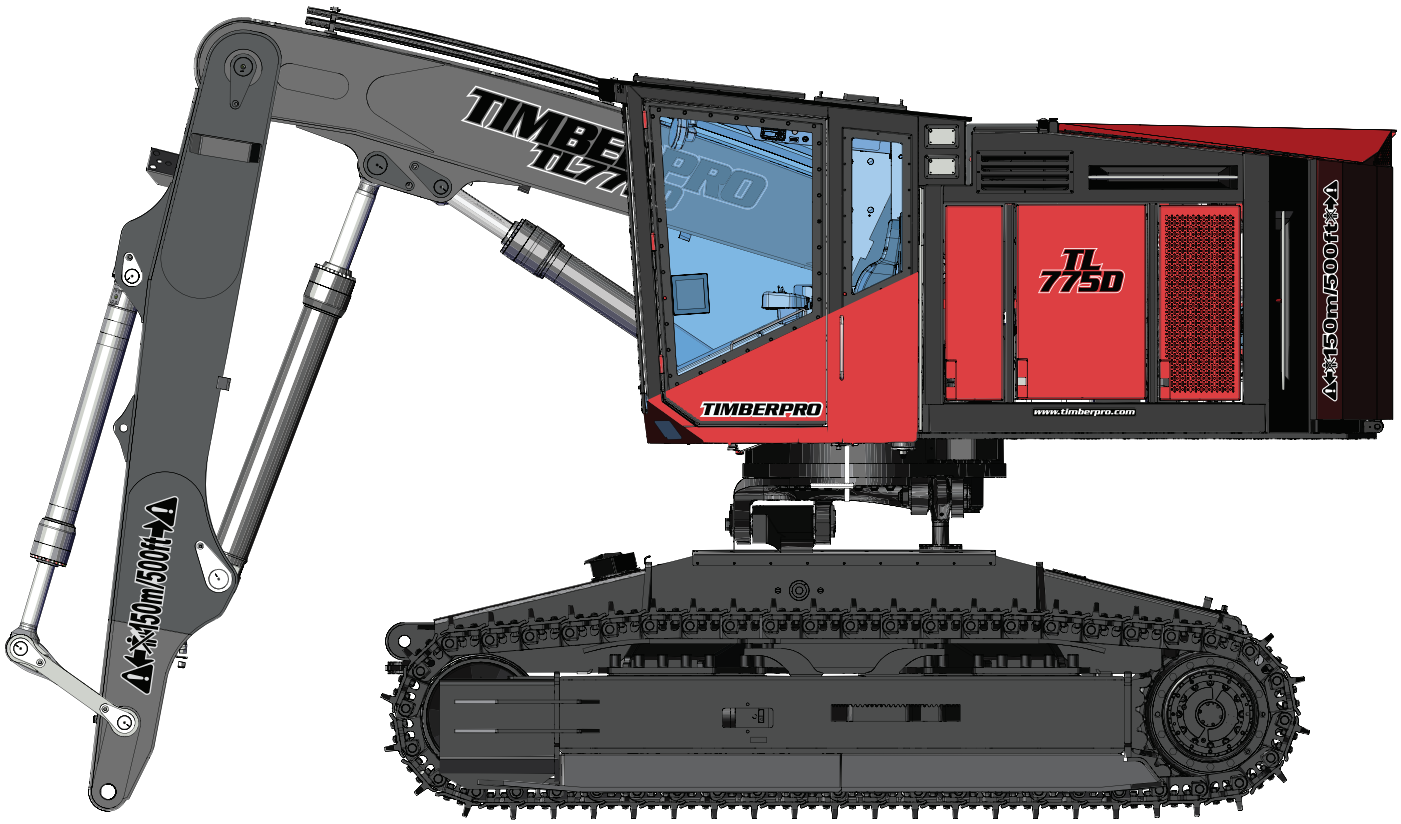

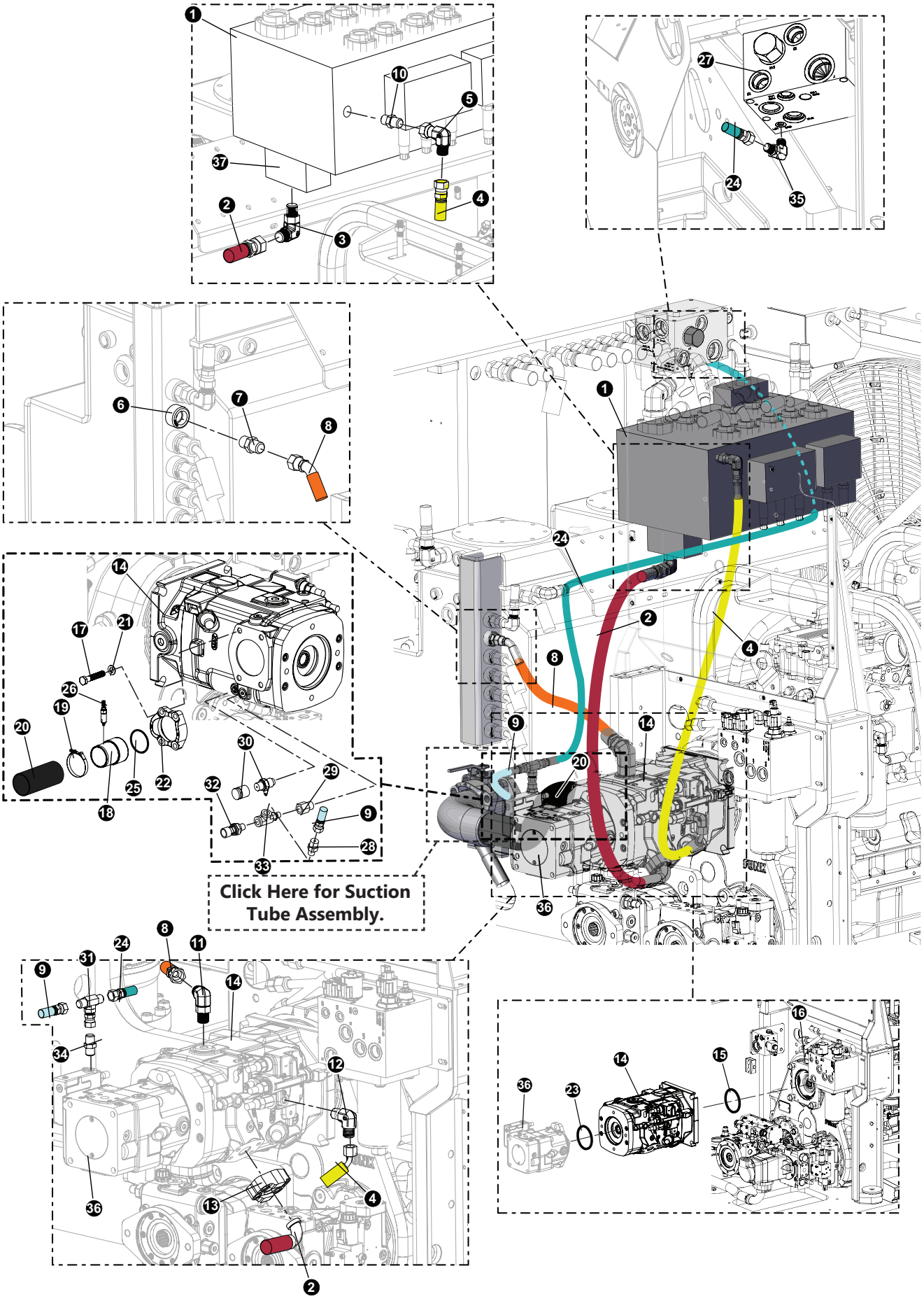
Click Here for Suction Tube Assembly.

FELLER BUNCHER HYDRAULICS ASSEMBLY, AND INSTALLATION

IMPLEMENT PUMP HYDRAULICS PARTS AND ASSEMBLY

REF	PART #	QTY	DESCRIPTION	SEE SECTION
1	58154	1	VALVE, MAIN - REX DISC / LEVELING	
2	(See Description)	1	PRESSURE, IMPLEMENT **HOSE PART # 787TC72 20-20OS-20PH9-SW**	
3	17055	1	ELBOW, 90 - FF1868T-2020S	
4	(See Description)	1	Hose, Valve LS, **Hose Part # 787TC75 06-06OS-06O4-W**	
5	20035	1	ELBOW, 90 SWIVEL - 6 C6LO-S	
6	(Click Here)	1	TANK, HYDRAULIC - 775	UP-2
7	18406	1	CONNECTOR, STR - FF1852T-1612S	
8	(See Description)	1	CASE IMPLEMENT HOSE ASSEMBLY, **HOSE PART #: 187TC46 16-16OS-16O4**	
9	(See Description)	1	Hose, Disc Saw Load Sense Jumper **Hose Part # 787TC14 04-04OS-04OS-W**	
10	18034	1	CONNECTOR, STR - FF1852T-0606S	
11	15228	2	ELBOW, 90 - FF1868T-1616S	
12	16296	1	ELBOW, 90 - FF1868T-0606S	
13	15114	1	KIT, SPLIT FLANGE - 1.25” (CODE 62)	
14	57865	1	PUMP, IMPLEMENT - REX 175CC/40 W/HP CONT	
15	15442-2	1	O-RING, PUMP DRIVE PILOT	
16	(Click Here)	1	TRANSMISSION, TRIPLE PUMP DRIVE	T-EE
17	(see description)	4	BOLT - 5/8” x 1 3/4” (Lawson PN #A697)	
18	60835	1	TUBE, SUCTION - 175CC TAILSWING ONLY	
19	15613	1	CLAMP, STRAP BAND - 3.5”	
20	(See Description)	1	HOSE ASSEMBLY, **HOSE PART #: 7216-300248 26-0-0**	
21	10771		WASHER, SAE FLAT - .625”	
22	58139	1	FLANGE, 13001H-5656K 175CC PUMP 57865	
23	58256	1	O-RING, THRU-DRIVE SERIES 40 (145/175)	
24	(See Description)	1	Hose, Disc Saw Load Sense **Hose Part # 787TC120 04-04OS-04OS-W**	
25	58992	1	O-RING, 175CC SUCTION ELBOW	
26	55615	1	FITTING, ADAPTOR - BLEED - SUCTION TUBE	
27	(Click Here)	1	MANIFOLD, OIL COOLER CONTROL - D SERIES	UP-2
28	55214	1	CONNECTOR, STR - 848-TTO-04X04 (W/.031)	
29	16294	1	BUSHING, REDUCER - 6410-6-4	
30	57820	2	TAP, GAUGE PORT # 6 SAE - Oring Boss	
31	23541	1	TEE - 4 S6LO-S	
32	24532	1	TRANSDUCER, DISC SAW Pressure	
33	52186	1	TEE, RUN - MALE (4 A0G5J5-S)	
34	15124	1	CONNECTOR, STR - FF1852T-0406S	
35	16540	1	ELBOW, 90 - FF1868T-0404S	
36	(Click Here)	1	PUMP, DISC SAW - HIGH PRESSURE (60CC)	EE-4
37	17016	1	CONNECTOR, FLANGE PAD - 1.25 C62	

📖See referenced page for component or assembly breakdown.
✂Bulk material - order length required in feet or meters.
❑Kit or Assembly - includes all items indented underneath.

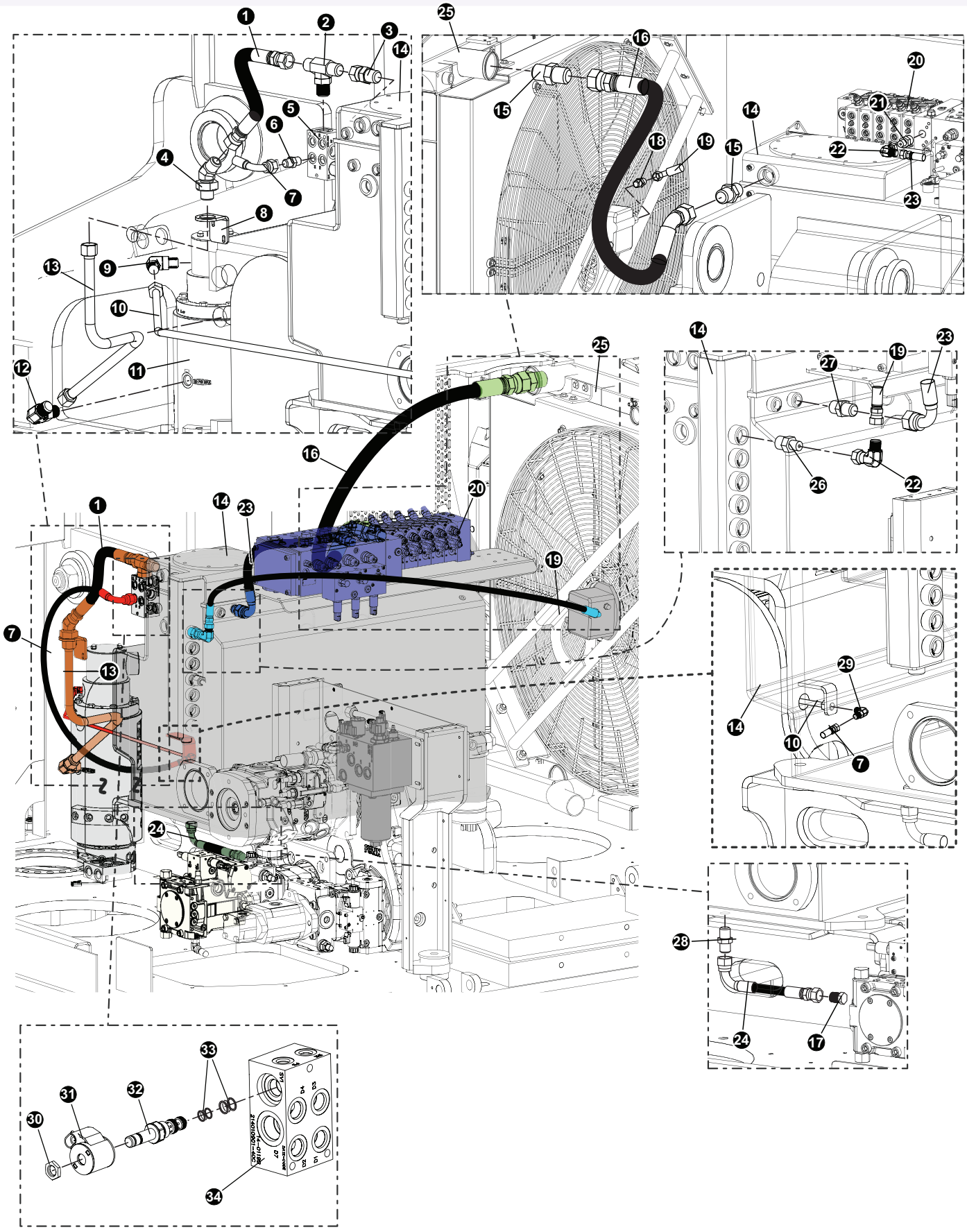

FELLER BUNCHER HYDRAULICS ASSEMBLY, AND INSTALLATION

HYDRAULICS PARTS AND ASSEMBLY

REF	PART #	QTY	DESCRIPTION	SEE SECTION
1	57941 (Kit #)	1	HOSE ASSEMBLY - P# 187TC22.5 16-16JS-16JS (Swing Brake Manifold to BH - Swing BR CD)	
2	55622	1	TEE, BRANCH - STRAIGHT THREAD #16	
3	11352	1	CONNECTOR, STR SWIVEL - 1404-16-16	
4	54806	1	45* Bulkhead Union Elbow -16 JIC	
5	55259 (Assm.)	1	Swing Brake Maninfold (See Below for Breakdown)	
6	53103	1	FITTING, 6-8 - ORB-JIC 830-B	
7	57941 (Kit #)	1	HOSE ASSEMBLY - P# 387TC41 06 06JS 06J9 (Swing BR Mfld to BH)	
8	47291	1	BRACKET, BH 16 JIC	
9	15479	1	ELBOW, 90 - 6801-6-4	
10	57277	1	TUBELINE, SD TO SEAL DRAIN BULKHEAD to RMV	
11	(Click Here)	1	Rotary Maninfold	UP--1-18
12	11306	1	ELBOW, 90 12 C5OX-S to RMV2	
13	57278	1	TUBELINE, RM V2 TO V2 BULKHEAD	
14	(Click Here)	1	Hydraulic Tank	UP-2-1
15	22448	1	CONNECTOR, STR - 848-TTO-24X24	
16	57941 (Kit #)	1	HOSE ASSEMBLY - P# 187TC40 24 24OS-24O4 (Radiator to Hydraulic Tank)	
17	16033	1	PLUG - FF9767-12S	
18	18034	1	CONNECTOR, STR - FF1852T-0606S	
19	57941 (Kit #)	1	HOSE ASSEMBLY - P# 387TC73 06 06OS 06O9 (Hydraulic Tank to Radiator)	
20	(Click Here)	1	Main Control Valve	FH-1-2
21	(No Replacement Part)	1	(Contact Rexroth for Replacement Fitting)	
22	20035	1	ELBOW, 90 SWIVEL - 6 C6LO-S	
23	57941 (Kit #)	1	HOSE ASSEMBLY - P# 187TC28 08 08OS 08O9 (Main Control Valve to Hydraulic Tank)	
24	57941 (Kit #)	1	HOSE ASSEMBLY - P# 187TC10 12 12OS 12O9 (Hydraulic EOL)	
25	(Click Here)	1	Radiator	UP-3
26	57620	1	FITTING, STR 6-12 F5OLO-S	
27	22901	1	CONNECTOR, STR - 6-8 F5OLO-S	
28	15201	1	CONNECTOR, STR - FF2031T-1212S	
29	55347	1	FITTING, ELBOW - BULKHEAD 6 WETX-WLN-S	
30	(See Desc.)	1	NUT, (P# 7004400)	
31	53992	1	COIL, (P# 4303724)	
32	53734	1	VALVE, SOLENOID - Parking Brake - (TM P# SV08-31-0-N-24ERZ)	
33	53735	1	KIT, seal - parking brake solenoid (SK10-3X-MM)	
34	55259	1	MANIFOLD, CASE DRAIN/SWING LOCK	

📖 **See referenced page for component or assembly breakdown.**
❑ **Kit or Assembly - includes all items indented underneath.**

FELLER BUNCHER HYDRAULICS ASSEMBLY, AND INSTALLATION

SWING MOTOR HYDRAULICS PARTS AND ASSEMBLY

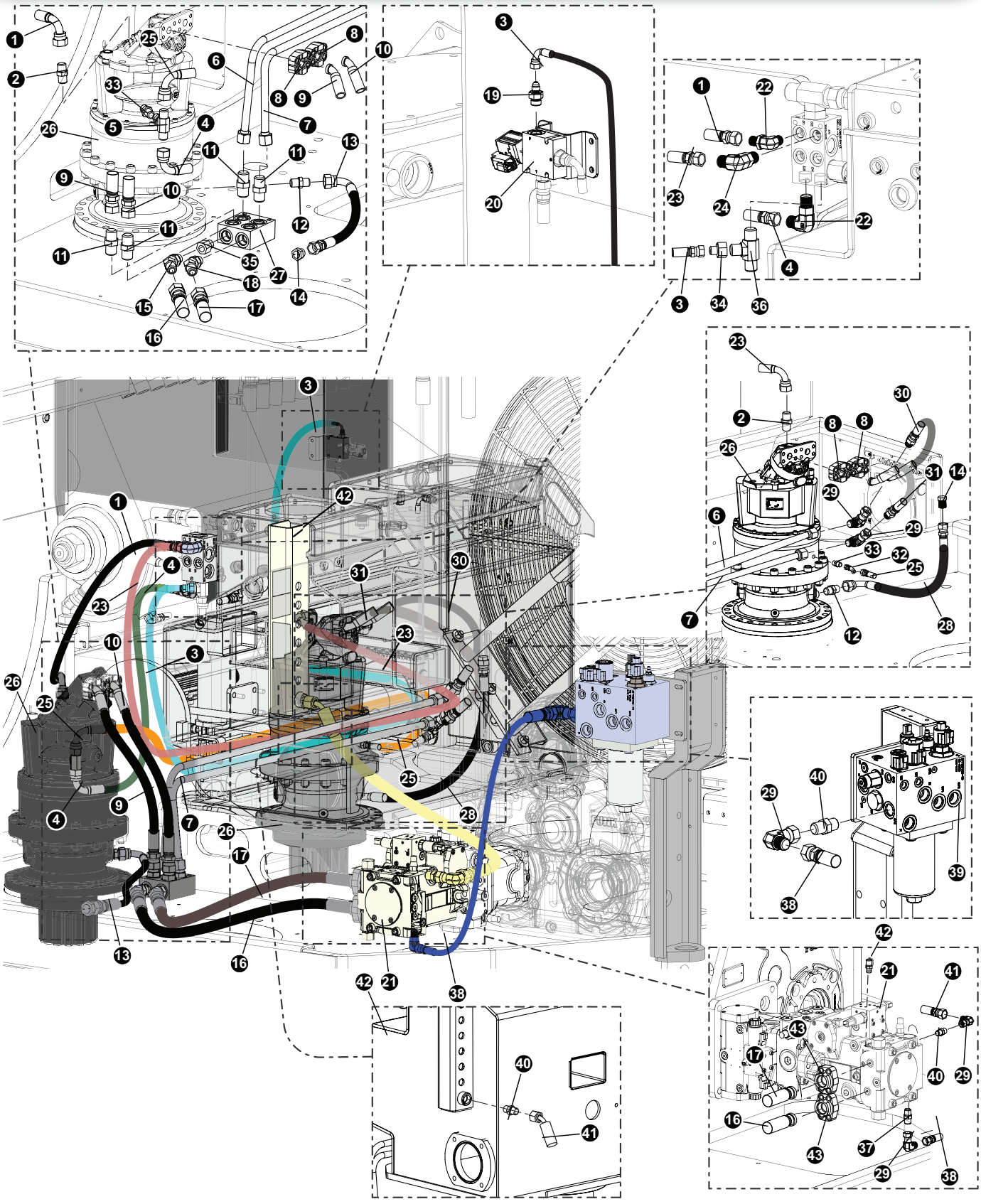

FELLER BUNCHER HYDRAULICS ASSEMBLY, AND INSTALLATION

SWING MOTOR HYDRAULICS PARTS AND ASSEMBLY

REF	PART #	QTY	DESCRIPTION	SEE SECTION
1	57941 (Kit #)	1	HOSE ASSEMBLY - P# 387TC 27 08-08JS-08O9 (Control Valve to Manifold)	
2	24182	1	CONNECTOR, STR - 6002-08-8BSPP	
3	58179 (KIT #)	1	HOSE ASSEMBLY - P# 387TC 106 04-04JS-04J9 (Charge to Greaser Valve)	
4	58179 (KIT #)	1	HOSE ASSEMBLY - (P# 387TC 29 04-04OS-04O9) (Swing Brake to Manifold)	
5	23541	1	TEE - 4 S6LO-S	
6	57300	1	TUBELINE, SWING MAN L TO R SWNG MTR BULKHEAD	
7	57316	1	TUBELINE, SWNG MAN R TO R SWNG MTR BULK	
8	16660	4	KIT, SPLIT FLANGE - .75 (CODE 62)	
9	58179 (KIT #)	1	HOSE ASSEMBLY - (P# 787TC 22.5 12-12JS-12PH4)	
10	58179 (KIT #)	1	HOSE ASSEMBLY - (P# 787TC 23.5 12-12JS-12PH4)	
11	11324	4	CONNECTOR, STR - 6400-12	
12	24182	2	CONNECTOR, STR - 6002-08-8BSPP	
13	58179 (KIT #)	1	HOSE ASSEMBLY - (P# 387TC 30 08-08OS-08O9)	
14	16032	2	PLUG - FF9767-08S	
15	16460	1	ELBOW, 45 - FF2068T-1616S	
16	58179 (KIT #)	1	HOSE ASSEMBLY - (P# 787TC 48 16-16OS-16PH)	
17	58179 (KIT #)	1	HOSE ASSEMBLY - (P# 787TC 48.5 16-16OS-16PH)	
18	21039	1	ELBOW, 45 - 16-12 V5OLO-S	
19	54809	1	CONNECTOR, STR - 4 JIC x -6 ORB	
20	57509	1	VALVE, AUTO GREASE SYSTEM	
21	57214	1	PUMP, SWING (TL765C) (90cc)	
22	16296	2	ELBOW, 90 - FF1868T-0606S	
23	58179 (KIT #)	1	HOSE ASSEMBLY - **(P# 387TC 84 08-08JS-08O9)**	
24	54810	1	ELBOW, 90* LONG -8 JIC	
25	58179 (KIT #)	1	HOSE ASSEMBLY - **(P# 387TC 55 04-04OS-04O9)**	
26	57213	1	MOTOR, SWING - L&S 32.5:1 / 56CC (TL765C)	
27	57284	1	MANIFOLD, SWING COMBINE FLOW	
28	58179 (KIT #)	1	HOSE ASSEMBLY - **(P# 387TC 36 08-08OS-08O9)**	
29	15477	4	ELBOW, 90 SWIVEL - 12 C6X-S	
30	58179 (KIT #)	1	HOSE ASSEMBLY - **(P# 787TC 31 12-12MJ-12PH4)**	
31	58179 (KIT #)	1	HOSE ASSEMBLY - **(P# 787TC 26 12-12MJ-12PH4)**	
32	53719	1	FITTING, SWIVEL NUT ELBOW - 45 DEG	
33	19469	2	CONNECTOR, STR METRIC - 4M12F82EDMLO-S	
34	16294	1	BUSHING, REDUCER - 6410-6-4	
35	19291	1	BUSHING, REDUCER - 6410-12-16	
36	55701	1	FITTING, TEE - 6 R5OX-S	
37	52078	1	CONNECTOR, STR - (10-12 F50L0-S)	
38	58179 (Kit#)	1	722TC42 12-12JS-12J4-SW	
39	(Click Here)	1	Charge/Cooler Manifold	EE-1
40	15152	3	CONNECTOR, STR - FF1852T-1212S	
41	58179 (KIT #)	1	HOSE ASSEMBLY - **(P# 187TC48.5 12-12OS-12O4)**	
42	57819	1	TAP, GAUGE PORT - #4 SAE Oring Boss- ST	
43	15113	2	KIT, SPLIT FLANGE - 1” (CODE 62)	

📖 **See referenced page for component or assembly breakdown.**

❑ **Kit or Assembly - includes all items indented underneath.**

FELLER BUNCHER HYDRAULICS ASSEMBLY, AND INSTALLATION

TL-775 CHARGE MANIFOLD PRESSURE, DRAINAGE, AND TANK CONNECTIONS

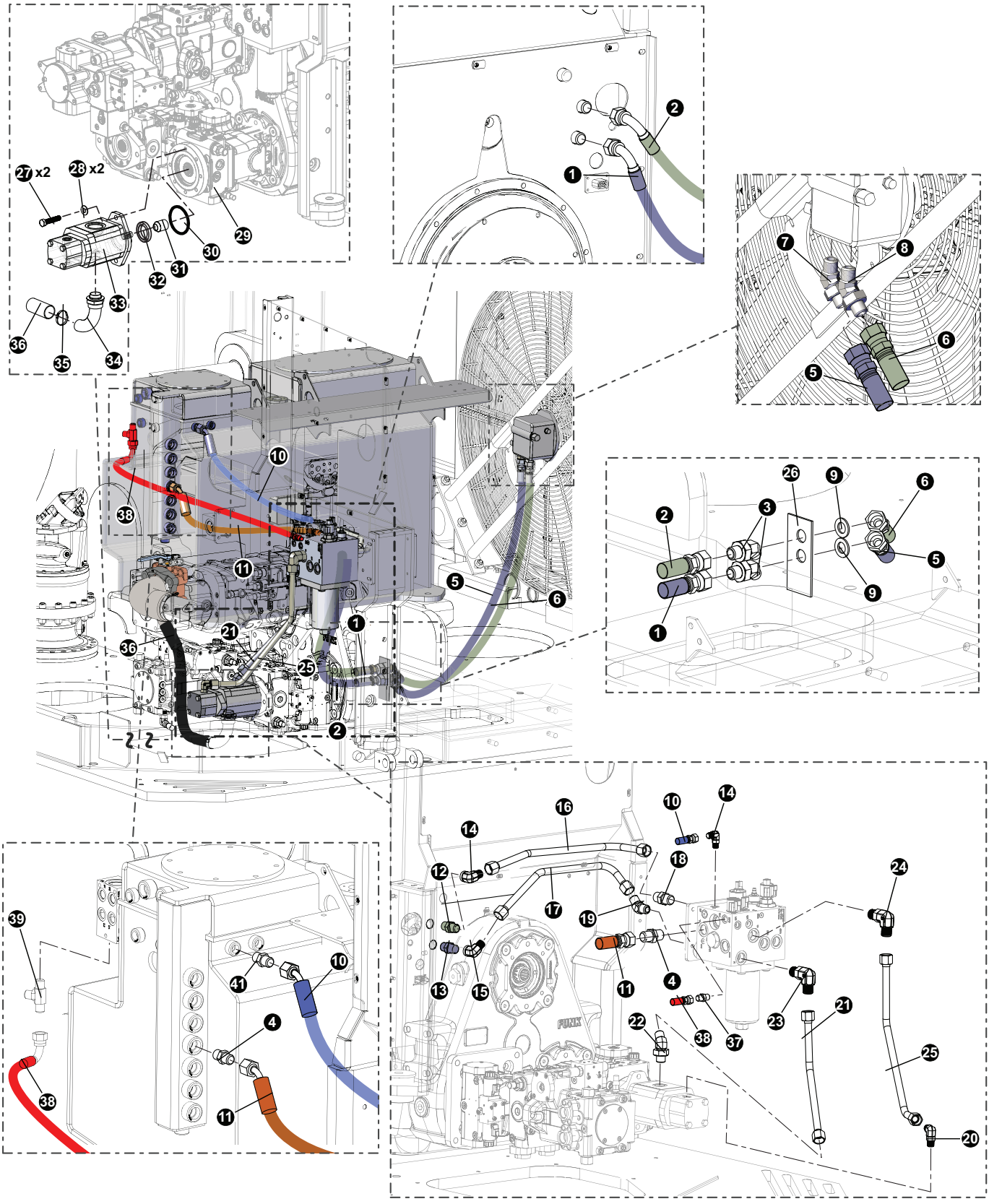

UPPER TURNTABLE - NV & LV

TL-775 CHARGE MANIFOLD PRESSURE, DRAINAGE, AND TANK CONNECTIONS

REF	PART #	QTY	DESCRIPTION	SEE SECTION
1	(See Description)	1	Radiator Return Hose (Suppier Hose Part #: **387TC 42.5 12 12OS -12J9**) - Engine BH to Fan Motor BH	
2	(See Description)	1	Radiator Supply Hose (Suppier Hose Part #: **387TC 42.5 12 12OS -12J9**) -Engine BH to Fan Motor BH	
3	19754	2	CONNECTOR, STR BULKHEAD - 12 WLO-WLNL-S	
4	15152	3	CONNECTOR, STR - FF1852T-1212S	
5	(See Description)	1	Radiator Return Hose (Suppier Hose Part #: **187TC 45 12-12OS-16OS**) -Fan Motor to Fan Motor BH	
6	(See Description)	1	Radiator Supply Hose (Suppier Hose Part #: **387TC 43 12-12OS-12OS**) -Fan Motor to Fan Motor BH	
7	19127	1	ELBOW, 45 - FF2068T-1212S	
8	16460	1	ELBOW, 45 - FF2068T-1616S	
9	57126	2	Washer	
10	(See Description)	1	Radiator Return Hose (Suppier Hose Part #: **387TC 63 06-06OS-0604-W**) - Hydraulic Tank to Charge Manifold)	
11	(See Description)	1	Charge nlock case drain (Suppier Hose Part #: **187TC 52 12-12OS -1204**) - Hydraulic Tank to Charge Manifold)	
12	11324	1	CONNECTOR, STR - 6400-12	
13	17009	1	CONNECTOR, STR BULKHEAD - 2700-12	
14	54704	1	ELBOW, 90 BULK 12 WETX-WLN-S (12 JIC MM)	
15	15477	1	ELBOW, 90 SWIVEL - 12 C6X-S	
16	58032	1	TUBELINE, FR TO BULKHEAD FAN RETURN	
17	57929	1	TUBELINE, F0 TO BULKHEAD FAN PRESSURE	
18	11324	1	CONNECTOR, STR - 6400-12	
19	15474	1	ELBOW, 45 - 6802-8	
20	53032	1	ELBOW, 90 - 12 JIC X 10 ORB	
21	57928	1	TUBELINE, F1 TO FRONT GEAR PUMP FAN PRESSURE	
22	15472	1	ELBOW, 45 SWIVEL - 12 V6X-S	
23	11306	1	ELBOW, 90 12 C5OX-S	
24	11306	1	ELBOW, 90 12 C5OX-S	
25	57927	1	TUBELINE, C1 TO REAR GEAR PUMP	
26	62152	1	WELDMENT, BH-TUBELINES - 765/775	
27	18415	2	BOLT - 12MM-1.75P X 30MM	
28	18735	2	WASHER, FLAT - 12MM	
29	(Click Here)	1	TRACK DRIVE PUMP	DH-3
30	21624	1	O-RING, CHARGE PUMP PILOT (AA4VG90)	
31	R909650371	1	COUPLING, Charge Pump	
33	57609	1	PUMP, CHARGE - DUAL FLOW	
32	58177		SHAFT SEAL 25.4-38.1-6.35 NBR	
	1517010194		SEAL KIT	
	1517010152		SEAL KIT	
34	57663	1	FITTING, ELBOW - HOSE END 90°	
35	55614	2	CLAMP, CONSTANT TORQUE - 1.75”	
36	58179	1	KIT, HOSE-D SERIES UPPER (Suppier Hose Part #: **811 HT42 24-0-0**)	
37	18034	1	CONNECTOR, STR - FF1852T-0606S	
38	(See Description)	1	Charge Pressure Gauge (Suppier Hose Part #: **387TC75 06-06OS-06J9-W**)	
39	55701	1	FITTING, TEE - 6 R5OX-S	

FELLER BUNCHER HYDRAULICS ASSEMBLY, AND INSTALLATION

CAB LEVELING HYDRAULICS PARTS AND ASSEMBLY

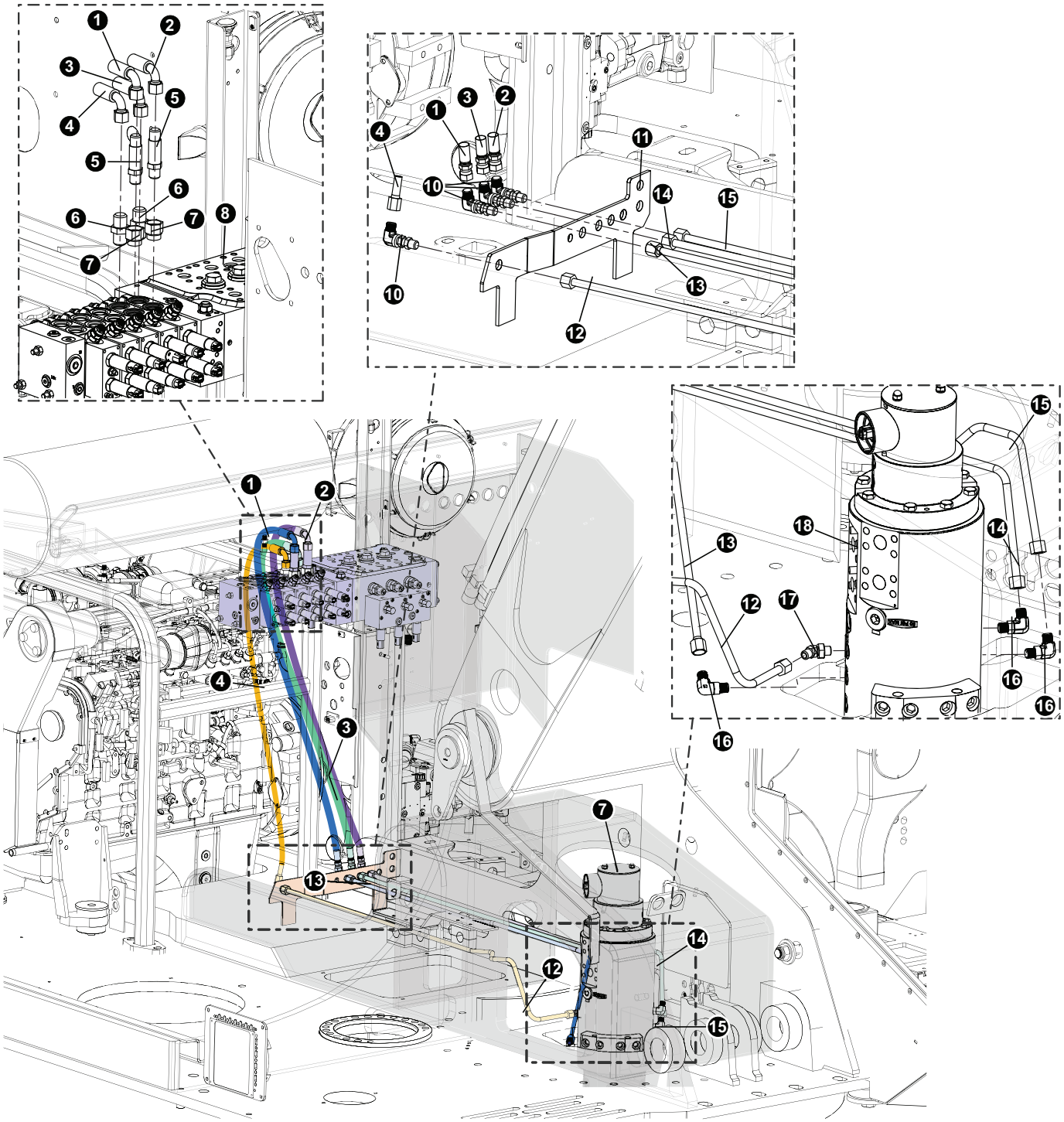

FELLER BUNCHER HYDRAULICS ASSEMBLY, AND INSTALLATION

CAB LEVELING HYDRAULICS PARTS AND ASSEMBLY

REF	PART #	QTY	DESCRIPTION	SEE SECTION
1	58239	2	HOSE ASSEMBLY - 722TC 58 08-08JS 08J9 (Cab Level (LVL) section “A” to Bulkhead)	
2	58239	2	HOSE ASSEMBLY - 722TC 59 08-08JS 08J9 (Cab Level (LVL) section “B” to Bulkhead)	
3	58239	1	HOSE ASSEMBLY - 722TC 54.5 08-08JS 08J9 (Bulkhead to Rotary Manifold Port 2)	
4	58239	1	HOSE ASSEMBLY - 722TC 51 08-08JS 08J9 (Bulkhead to Rotary Manifold Port 4)	
5	55513	2	FITTING, STRAIGHT CONNECTOR #8	
6	55380	2	FITTING, STRAIGHT - 8-12 F5OX-S	
7	20067	2	BUSHING, REDUCER - 6410-12-8	
8	(Click Here)	1	MAIN CONTROL VALVE	FH-1
10	55382	4	FITTING, BULKHEAD - 8 WETX-WLN-S	
11	(Click Here)	1	UPPER TURNTABLE	UP-1
12	57269	1	TUBELINE, RM #5 TO LEVEL BULKHEAD	
13	57272	1	TUBELINE, RM #6 TO LEVEL BULKHEAD	
14	57271	1	TUBELINE, RM #4 TO LEVEL BULKHEAD	
15	57270	1	TUBELINE, RM #2 TO LEVEL BULKHEAD	
16	16360	1	ELBOW, 90 - FF1868T-0808S	
17	19126	1	ELBOW, 45 - FF2068T-0808S	
18	(Click Here)	1	ROTARY MANIFOLD	UP-1

📖See referenced page for component or assembly breakdown.
✂Bulk material - order length required in feet or meters.
❑Kit or Assembly - includes all items indented underneath.

FELLER BUNCHER HYDRAULICS ASSEMBLY, AND INSTALLATION

TL-775 SUPPY, RETURN, AND FLUSHING CIRCUITS - SERIAL # TL745D-0760-061920 AND BEFORE

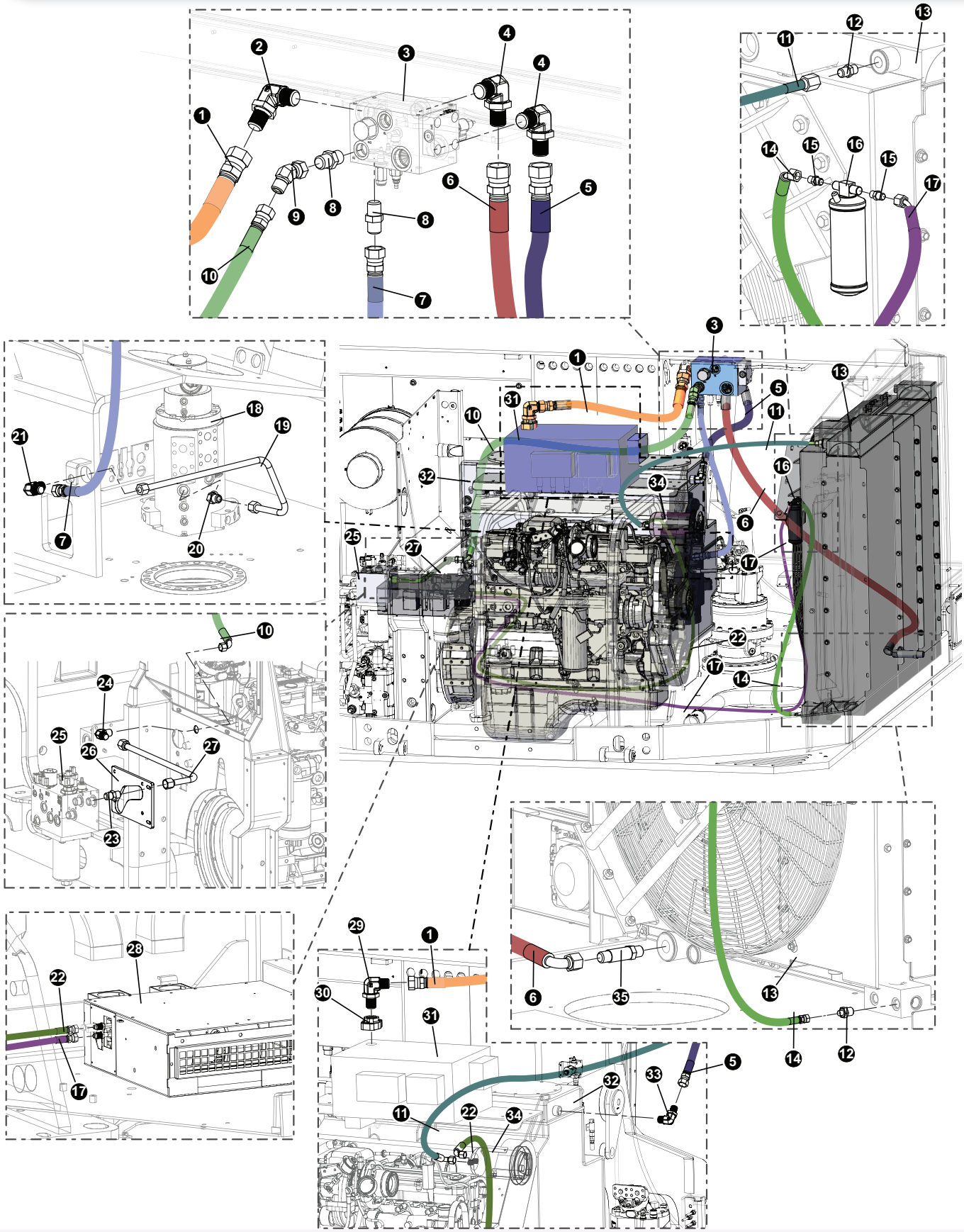

FELLER BUNCHER HYDRAULICS ASSEMBLY, AND INSTALLATION

TL-775 SUPPY, RETURN, AND FLUSHING CIRCUITS - SERIAL # TL745D-0760-061920 AND BEFORE

REF	PART #	QTY	DESCRIPTION	SEE SECTION
1	(See Description)	1	Main Contol Valve Flush Hose (Supplier Hose Part #: 187TC 40 20-20OS-20OS)	
2	50470	1	ELBOW, 90 - 849-TT0-16X20	
3	(Click Here)	1	MANIFOLD, OIL COOLER CONTROL - D SERIES	UP-1
4	(See Description)	2	90 Fitting (Supplier Part #: 24-C50LOS-2404)	
5	(See Description)	1	Hydraulic Tank Flush Hose (Suppier Hose Part #: 187TC30 24-24OS-24O9)	
6	(See Description)	1	Radiator Flush Hose (Suppier Hose Part #: 187TC83 24-24O9-24OS-SW)	
7	(See Description)	1	Rotary Manifold Flush Hose (Suppier Hose Part #: 387TC47 12-JS-12OS-SW)	
8	15226	2	CONNECTOR, STR - FF1852T-1216S	
10	(See Description)	1	Engine Bulkhead/Charge Mfld Flush Hose (Suppier Hose Part #: 387TC71 12-OS-12J9-SW)	
11	(See Description)	1	(Find # on Machine (Badger Truck Kit #BK1163)	
12	(See Description)	2	Straight Fitting (Badger Truck #BK1189)	
13	(Click Here)	1	RADIATOR / OIL COOLER - STAGE V TAIL SWING	UP-3
14	(See Description)	1	(Find # on Machine (Badger Truck Kit #BK1163)	
15	(See Description)	4	Straight Fitting (Badger Truck #21.31406)	
16	50937	1	DRIER, A/C - (EAGLE 24V SYSTEM)	
17	(See Description)	1	(Find # on Machine (Badger Truck Kit #BK1163)	
18	(Click Here)	1	ROTARY MANIFOLD	UP-1
19	57279	1	TUBELINE, RM #7 TO FLUSH BULKHEAD	
20	15474	1	ELBOW, 45 - 6802-12	
21	54704	1	ELBOW, 90 BULK 12 WETX-WLN-S (12 JIC MM)	
22	(See Description)	1	(Find # on Machine (Badger Truck Kit #BK1163)	
23	11324	1	CONNECTOR, STR - 6400-12	
24	54704	1	ELBOW, 90 BULK 12 WETX-WLN-S (12 JIC MM)	
25	(Click Here)	1	CHARGE MANIFOLD	EE-1
26	60444	1	MOUNT, MANIFOLD	
27	57931	1	TUBELINE, T2 TO BULKHEAD	
28	(Click Here)	1	AC HEATER	OC-4
29	17055	1	ELBOW, 90 - FF1868T-2020S	
30	17909	1	CONNECTOR, FLANGE PAD-W46K-20-20 CODE 61	
31	(Click Here)	1	MAIN CONTROL VALVE	FH-1
32	(Click Here)	1	HYDRAULIC TANK	UP-2
33	22448	1	CONNECTOR, STR - 848-TTO-24X24	
34	(Click Here)	1	AC CONDENSER	OC-4
35	57498	1	VALVE, CHECK - ORIFICE GREASE SYSTEM	

FELLER BUNCHER HYDRAULICS ASSEMBLY, AND INSTALLATION

TL-775 SUPPY, RETURN, AND FLUSHING CIRCUITS - SERIAL # TL745D-0761-061920 AND AFTER

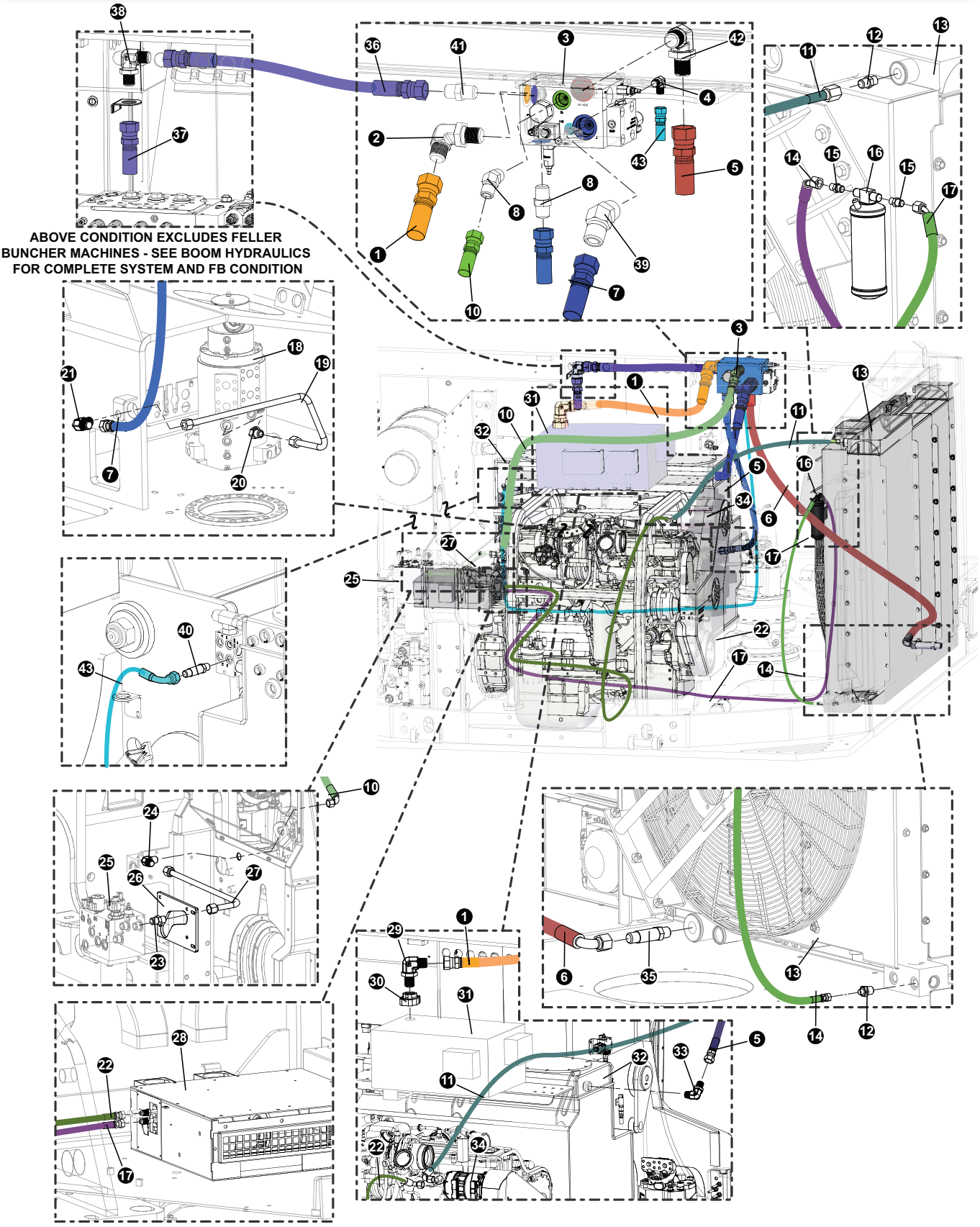

FELLER BUNCHER HYDRAULICS ASSEMBLY, AND INSTALLATION

TL-775 SUPPY, RETURN, AND FLUSHING CIRCUITS - SERIAL # TL745D-0761-061920 AND AFTER

REF	PART #	QTY	DESCRIPTION	SEE SECTION
1	(See Description)	1	Main Contol Valve Flush Hose (Supplier Hose Part #: 187TC 40 20-20OS-20OS)	
2	50470	1	ELBOW, 90 - 849-TT0-16X20	
3	(Click Here)	1	MANIFOLD, OIL COOLER CONTROL - D SERIES	UP-1
4	(See Description)	2	90 Fitting (Supplier Part #: 24-C50LOS-2404)	
5	(See Description)	1	Hydraulic Tank Flush Hose (Suppier Hose Part #: 187TC30 24-24OS-24O9)	
6	(See Description)	1	Radiator Flush Hose (Suppier Hose Part #: 187TC83 24-24O9-24OS-SW)	
7	(See Description)	1	Rotary Manifold Flush Hose (Suppier Hose Part #: 387TC47 12-JS-12OS-SW)	
8	15226	2	CONNECTOR, STR - FF1852T-1216S	
10	(See Description)	1	Engine Bulkhead/Charge Mfld Flush Hose (Suppier Hose Part #: 387TC71 12-OS-12J9-SW)	
11	(See Description)	1	(Find # on Machine (Badger Truck Kit #BK1163)	
12	(See Description)	2	Straight Fitting (Badger Truck #BK1189)	
13	(Click Here)	1	RADIATOR / OIL COOLER - STAGE V TAIL SWING	UP-3
14	(See Description)	1	(Find # on Machine (Badger Truck Kit #BK1163)	
15	(See Description)	4	Straight Fitting (Badger Truck #21.31406)	
16	50937	1	DRIER, A/C - (EAGLE 24V SYSTEM)	
17	(See Description)	1	(Find # on Machine (Badger Truck Kit #BK1163)	
18	(Click Here)	1	ROTARY MANIFOLD	UP-1
19	57279	1	TUBELINE, RM #7 TO FLUSH BULKHEAD	
20	15474	1	ELBOW, 45 - 6802-12	
21	54704	1	ELBOW, 90 BULK 12 WETX-WLN-S (12 JIC MM)	
22	(See Description)	1	(Find # on Machine (Badger Truck Kit #BK1163)	
23	11324	1	CONNECTOR, STR - 6400-12	
24	54704	1	ELBOW, 90 BULK 12 WETX-WLN-S (12 JIC MM)	
25	(Click Here)	1	CHARGE MANIFOLD	EE-1
26	60444	1	MOUNT, MANIFOLD	
27	57931	1	TUBELINE, T2 TO BULKHEAD	
28	(Click Here)	1	AC HEATER	OC-4
29	17055	1	ELBOW, 90 - FF1868T-2020S	
30	17909	1	CONNECTOR, FLANGE PAD-W46K-20-20 CODE 61	
31	(Click Here)	1	MAIN CONTROL VALVE	FH-1
32	(Click Here)	1	HYDRAULIC TANK	UP-2
33	22448	1	CONNECTOR, STR - 848-TTO-24X24	
34	(Click Here)	1	AC CONDENSER	OC-4
35	57498	1	VALVE, CHECK - ORIFICE GREASE SYSTEM	
36	(See Description)	1	NON-FB Flush Hose (Suppier Hose Part #: 187TC 39-20-20OS-20JS-SW)	
37	(See Description)	1	NON-FB Flush Hose (Suppier Hose Part #: 187TC 38.5-20-20OS-20JS-SW)	
38	52429	1	ELBOW, 90 BULKHEAD - #20 WELO-WLNL-S (NON-FB Machine)	
39	24257	1	ELBOW, 45 - FF2068T-2424S	
40	55513	1	FITTING, STRAIGHT CONNECTOR #8	
41	17344	1	CONNECTOR, STR - FF1852T-2020S (NON-FB Machine)	
42	15481	1	ELBOW, 90 - 6801-8	
43	(See Description)	1	HOC Manifold Drainage (Supplier Hose Part #: 387TC 116-08-08JS-08J9)	

FELLER BUNCHER HYDRAULICS ASSEMBLY, AND INSTALLATION

TL-775 SUPPY, RETURN, AND FLUSHING CIRCUITS

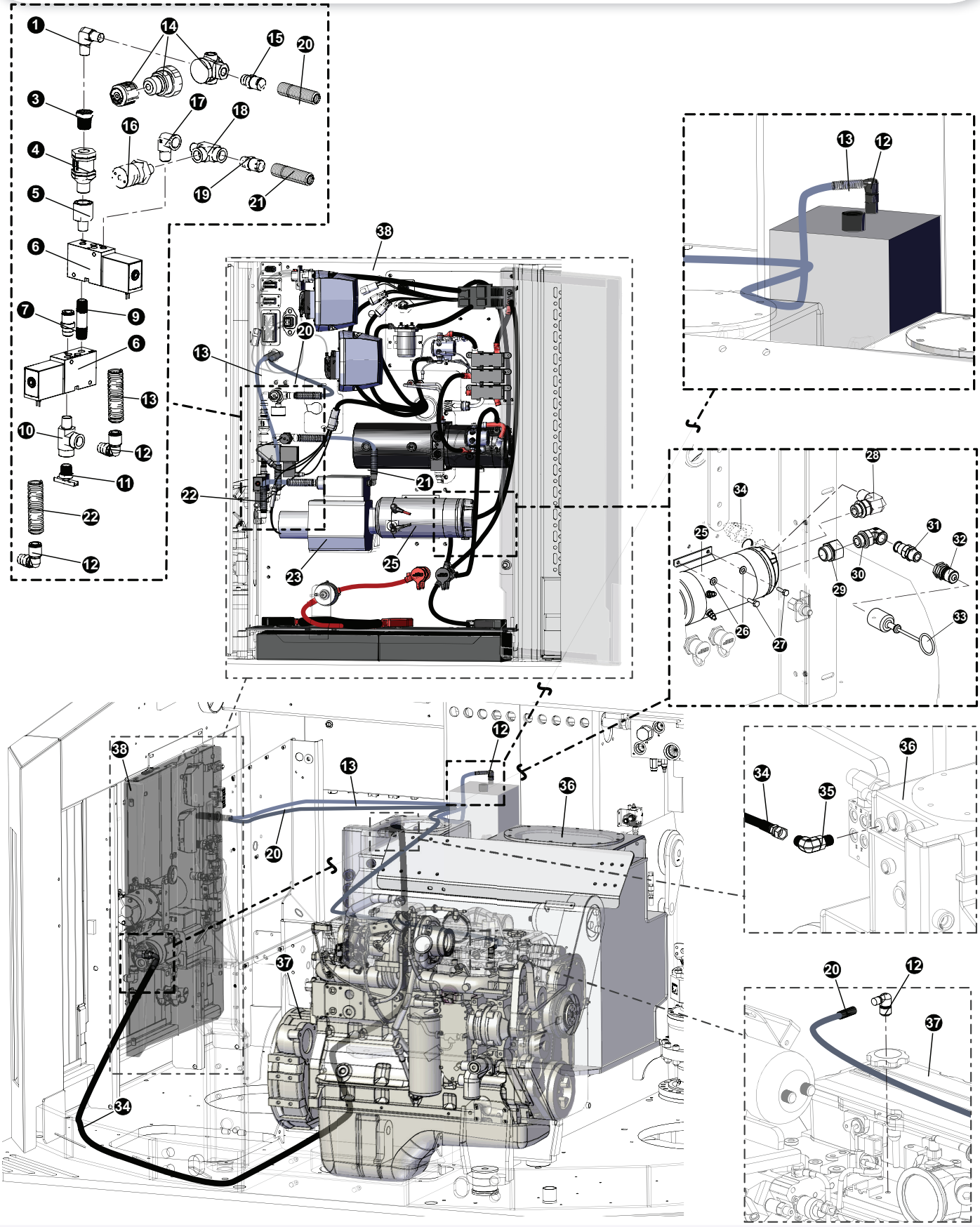

FELLER BUNCHER HYDRAULICS ASSEMBLY, AND INSTALLATION

TL-775 SUPPY, RETURN, AND FLUSHING CIRCUITS

REF	PART #	QTY	DESCRIPTION	SEE SECTION
1	52741	1	ELBOW, MALE PIPE - 1/4 CR-S	
3	11318	1	BUSHING, REDUCER - 5406-6-4	
4	15652	1	VALVE, CHECK - HYDRAULIC/FUEL TANK	
5	52145	1	ADAPTER, EXPANDER - 3/8 X 1/4 FG-S	
6	51616	2	VALVE, VACUUM PUMP - HYD TANK	
9	16314	1	NIPPLE, PIPE - .25” X 2”	
10	10393	1	TEE - 5602-4	
11	15650	1	VALVE, TANK VENT - DC602-6	
12	51739	4	CONNECTOR, ELBOW -PUSH ON (VACUUM)	
13	51738	lin. ft	HOSE, 3/8” PUSH ON - VACUUM PUMP	
14	15649	1	REGULATOR, TURBO BOOST	
16	51737	1	SWITCH, PRESSURE - VACUUM PUMP (HYD TANK)	
17	21147	1	ELBOW, 90 STREET .25” NPT - BRASS	
18	10393	1	TEE - 5602-4	
19	52506	2	CONNECTOR, STR - PUSH HOSE 3/8 (VACUUM)	
20	51738	lin. ft	HOSE, 3/8” PUSH ON - VACUUM PUMP	
21	51738	lin. ft	HOSE, 3/8” PUSH ON - VACUUM PUMP	
22	51738	lin. ft	HOSE, 3/8” PUSH ON - VACUUM PUMP	
23	(Click Here)	1	PUMP, VACUUM - HYD TANK	UP-2
25	55691	1	FILL PUMP ASSEMBLY	
26	10801	4	WASHER, FLAT - .3125”	
27	15605	4	BOLT - .3125” X .75”	
28	55712	1	FITTING, ELBOW - MALE 8-8C4OMXS	
29	55711	1	FITTING, 3/4 - 12F40HG55	
30	22383	1	ELBOW, 90 - 12 AOEG5-S	
31	54998	1	FITTING, FILL PUMP	
32	55620	1	NIPPLE, 60 SERIES - H6-63-T12	
33	55617	1	CAP, QUICK CONNECT - RUBBER (RED)	
34	(See Description)	1	Fill Pump Supply Hose (Supplier Hose Part #: 387TC 227 08-08JS-08J9L)	
35	15481	1	ELBOW, 90 - 6801-8	
36	(Click Here)	1	HYDRAULIC TANK ASSEMBLY	UP-2
38	47867	1	WELDMENT, ELEC PANEL, D-MODEL	

📖 See reference page for component or assembly breakdown.
❑ Kit or Assembly - includes all items indented underneath.
✂ Sold in bulk per foot - Please specify length when ordering.

PAGE INTENTIONALLY LEFT BLANK

SECTION FH-2
FELLER BUNCHER HYDRAULICS ASSEMBLY AND INSTALLATION

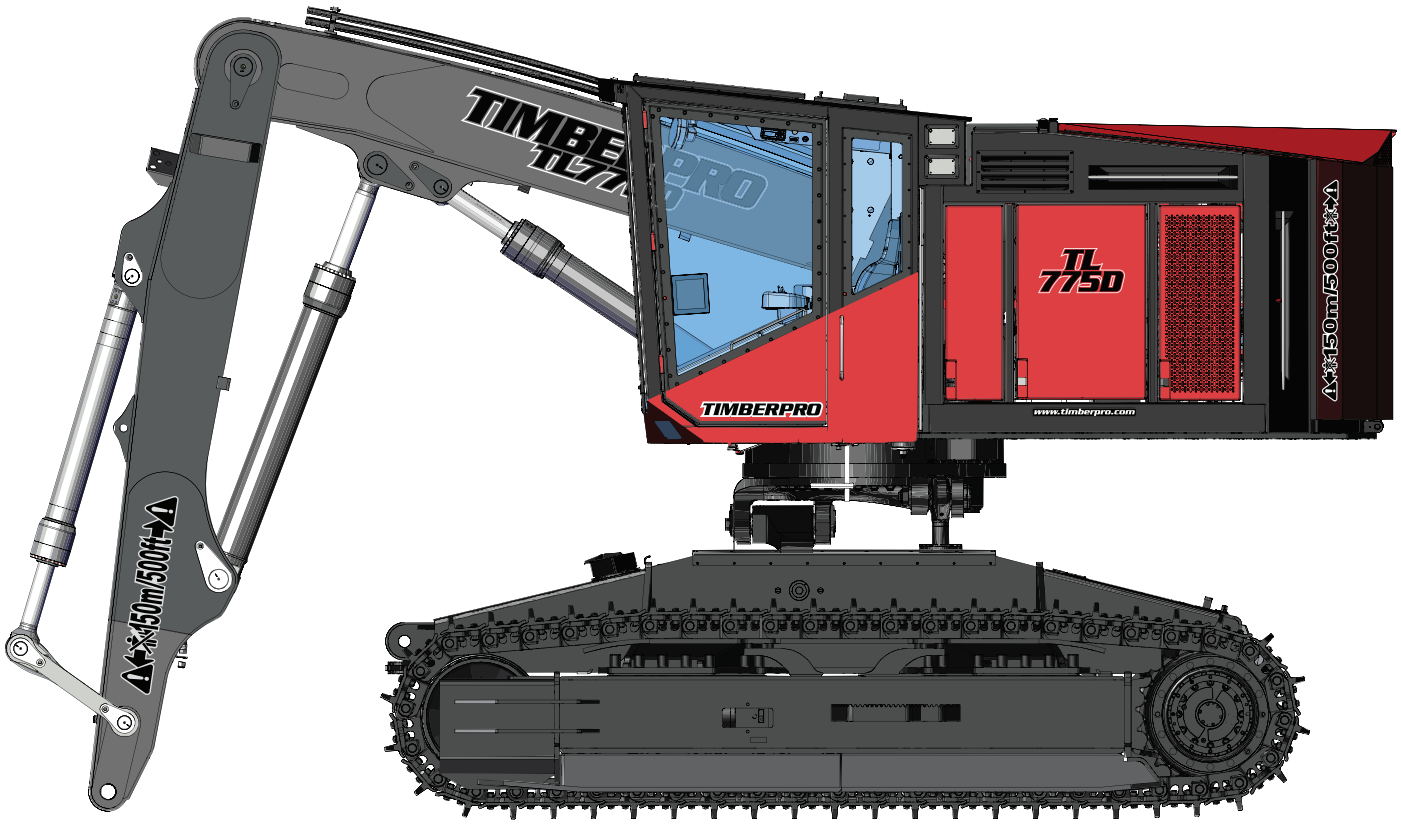

FELLER BUNCHER HYDRAULICS ASSEMBLY AND INSTALLATION

MAIN BOOM CYLINDER HYDRAULICS PARTS AND ASSEMBLY

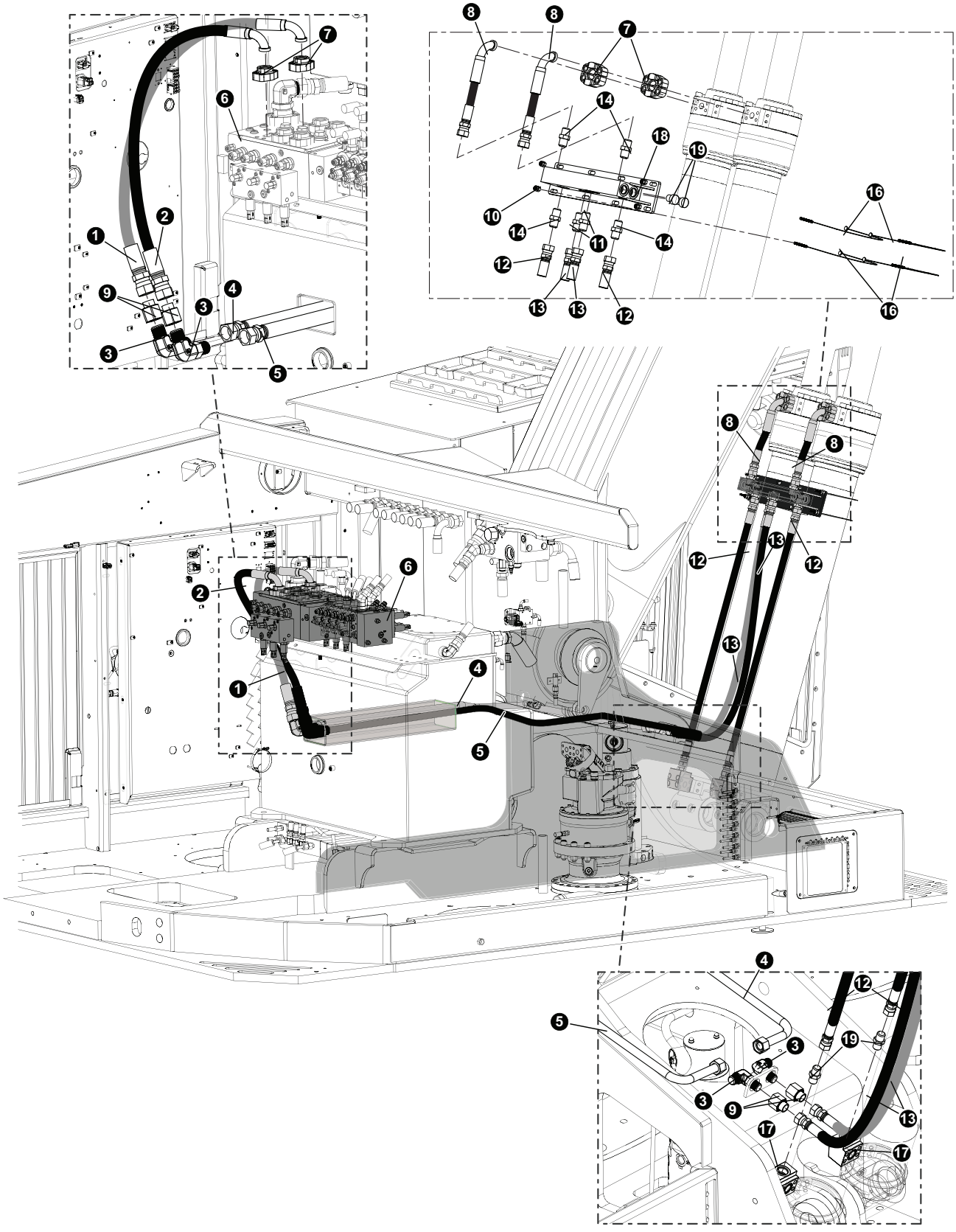

FELLER BUNCHER HYDRAULICS ASSEMBLY AND INSTALLATION

MAIN BOOM CYLINDER HYDRAULICS PARTS AND ASSEMBLY

REF	PART #	QTY	DESCRIPTION	SEE SECTION
1	58239 (Kit #)	1	HOSE ASSEMBLY - **P# 722TC38.5 16-16OS-16PH9** (Control Valve to Boom Cylinder Tube)	
2	58239 (Kit #)	1	HOSE ASSEMBLY - **P# 722TC37 16-16OS-16PH9** (Control Valve to Boom Cylinder Tube)	
3	52429	4	ELBOW, 90 BULKHEAD - #20 WELO-WLNL-S	
4	57260	1	TUBELINE, MC BULKHEAD TO MC BULKHEAD	
5	57282	1	TUBELINE, MC BULKHEAD TO MC BULKHEAD	
6	(Click Here)	1	VALVE, MAIN - REX HARVESTER / SHEAR	UP-2
7	15113	4	KIT, SPLIT FLANGE - 1” (CODE 62)	
8	58239 (Kit #)	2	HOSE ASSEMBLY - P#722TC15 12-12OS-16PH9 (Main Cylinder to Cylinder Manifold)	
9	20455	4	CONNECTOR, REDUCER - ORS FF2281T-1620S	
10	55262	8	NUT, LOCK - “C” SERIES HYD TANK COVER	
11	15225	2	CONNECTOR, STR - FF1852T-1616S	
12	58179 (Kit #)	2	HOSE ASSEMBLY - **P#722TC41 12-12OS-12OS-SW** (Main Cylinder to Cylinder Manifold)	
13	58179 (Kit #)	2	HOSE ASSEMBLY - **P#722TC54 16-16OS-16OS** (Main Cylinder to Cylinder Manifold)	
14	15152	4	CONNECTOR, STR - FF1852T-1212S	
16	57748	4	CABLE, CYLINDER - 19” - 765	
17	57601	2	FLANGE, BLOCK ELBOW W184-16-16U CODE 62	
18	48391	1	MANIFOLD, MAIN BOOM - TL765	
19	15584	2	PLUG - 6408-HHP-12	

📖See referenced page for component or assembly breakdown.
✂Bulk material - order length required in feet or meters.
❑Kit or Assembly - includes all items indented underneath.

FELLER BUNCHER HYDRAULICS ASSEMBLY, AND INSTALLATION

DISC SAW AND ATTRIBUTING HYDRAULIC LINES

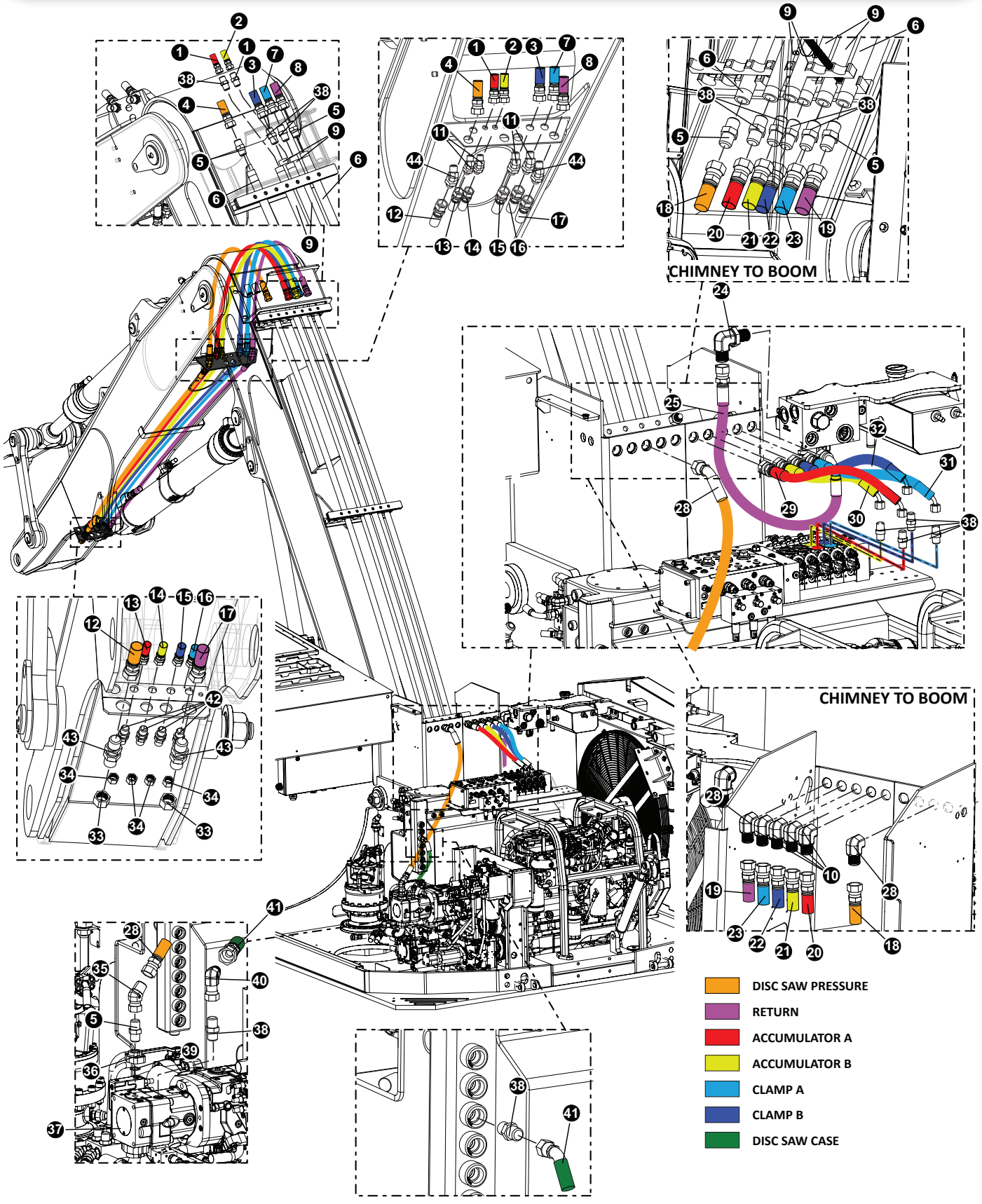

FELLER BUNCHER HYDRAULICS ASSEMBLY, AND INSTALLATION

DISC SAW AND ATTRIBUTING HYDRAULIC LINES

REF	PART #	QTY	DESCRIPTION	SEE SECTION
1	57683	1	HOSE ASSEMBLY - 722TC72 12-12OS-12OS-SW (ACCUM. A MAIN TO STICK)	
2	57683	1	HOSE ASSEMBLY - 722TC72 12-12OS-12OS-SW (ACCUM. A MAIN TO STICK)	
3	57683	1	HOSE ASSEMBLY - 722TC71 12-12OS-12OS-SW (CLAMP B MAIN TO STICK)	
4	57683	1	HOSE ASSEMBLY - 722TC69 16-16OS-16OS-SW (DISC SUPPLY MAIN TO STICK)	
5	16851	6	CONNECTOR, STR - FF1852T-1210S	
6	48306	2	TUBELINE, BENT - 1” x 132”	
7	57683	1	HOSE ASSEMBLY - 722TC71 12-12OS-12OS-SW (CLAMP A MAIN TO STICK)	
8	57683	1	HOSE ASSEMBLY - 722TC69 16-16OS-16OS-SW (DISC RET MAIN TO STICK)	
9	48307	2	TUBELINE, BENT - .75” X 130”	
10	53680	6	FITTING, BULKHEAD UNION ELBOW 16 WELO-WN	
11	55509	4	FITTING, BULKHEAD UNION - 45 DEGREE #12	
12	57683	1	HOSE ASSEMBLY - 787TC97 16-16OS-16OS-SW (STICK BOOM BH - BH)	
13	57683	1	HOSE ASSEMBLY - 722TC98 12-12OS-12OS-SW (ACCUM. A BH - BH)	
14	57683	1	HOSE ASSEMBLY - 722TC98 12-12OS-12OS-SW (ACCUM. B BH - BH)	
15	57683	1	HOSE ASSEMBLY - 722TC98 12-12OS-12OS-SW (CLAMP B BH - BH)	
16	57683	1	HOSE ASSEMBLY - 722TC98 12-12OS-12OS-SW (CLAMP A BH - BH)	
17	57683	1	HOSE ASSEMBLY - 387TC97 16-16OS-16OS-SW (DISC RETURN BH - BH)	
18	58239	1	HOSE ASSEMBLY - 722TC 44 16-16OS-16OS-SW (DS PRESSURE - MAIN BOOM)	
19	58239	1	HOSE ASSEMBLY - 722TC 44 16-16OS-16OS-SW (DS RETURN - MAIN BOOM)	
20	58239	1	HOSE ASSEMBLY - 722TC 44 12-12OS-16OS-SW (ACCUM A - MAIN BOOM)	
21	58239	1	HOSE ASSEMBLY - 722TC 44 12-12OS-16OS-SW (ACCUM B - MAIN BOOM)	
22	58239	1	HOSE ASSEMBLY - 722TC 44 12-12OS-16OS-SW (CLAMP B - MAIN BOOM)	
23	58239	1	HOSE ASSEMBLY - 722TC 44 12-12OS-16OS-SW (CLAMP A - MAIN BOOM)	
24	53680	1	FITTING, BULKHEAD UNION ELBOW 16 WELO-WN	
25	58239	1	HOSE ASSEMBLY - 187TC28.5 16-16OS-16O9 (DISC RETURN CHIMNEY TO BLUE BLOCK)	
28	58239	1	HOSE ASSEMBLY - 787TC72 16-16OS-16O4 (DS PRESSURE TO CHIMNEY)	
29	58239	1	HOSE ASSEMBLY - 722TC24.5 12-12O4-16OS (ACCUM. A TO CHIMNEY)	
30	58239	1	HOSE ASSEMBLY - 722TC27 12-12O4-16OS (ACCUM. B TO CHIMNEY)	
31	58239	1	HOSE ASSEMBLY - 722TC27 12-12O4-16OS (CLAMP A TO CHIMNEY)	
32	58239	1	HOSE ASSEMBLY - 722TC24.5 12-12O4-16OS (CLAMP B TO CHIMNEY)	
33	15436	2	CAP - FF9863-16S	
34	15437	4	CAP - FF9863-12S	
35	52441	1	ELBOW, 45 SWIVEL NUT	
36	15113	1	KIT, SPLIT FLANGE - 1” (CODE 62)	
37	(Click Here)	1	DISC SAW PUMP	UP-1
38	15152	12	CONNECTOR, STR - FF1852T-1212S	
39	15377	1	O-RING - 1” SF (CODE 61/62)	
40	17670	1	ELBOW, 90 SWIVEL - FF2098T-1212S	
41	58179	1	HOSE ASSEMBLY - **187TC52.5 12-12OS-12O4** (DS PUMP TO TANK)	
42	19754	4	CONNECTOR, STR BULKHEAD - 12 WLO-WLNL-S	
43	53680	2	FITTING, BULKHEAD UNION ELBOW 16 WELO-WN	
44	54316	2	ELBOW, BULKHEAD UNION 45DEG #16	

📖See referenced page for component or assembly breakdown.
✂Bulk material - order length required in feet or meters.
❑Kit or Assembly - includes all items indented underneath.

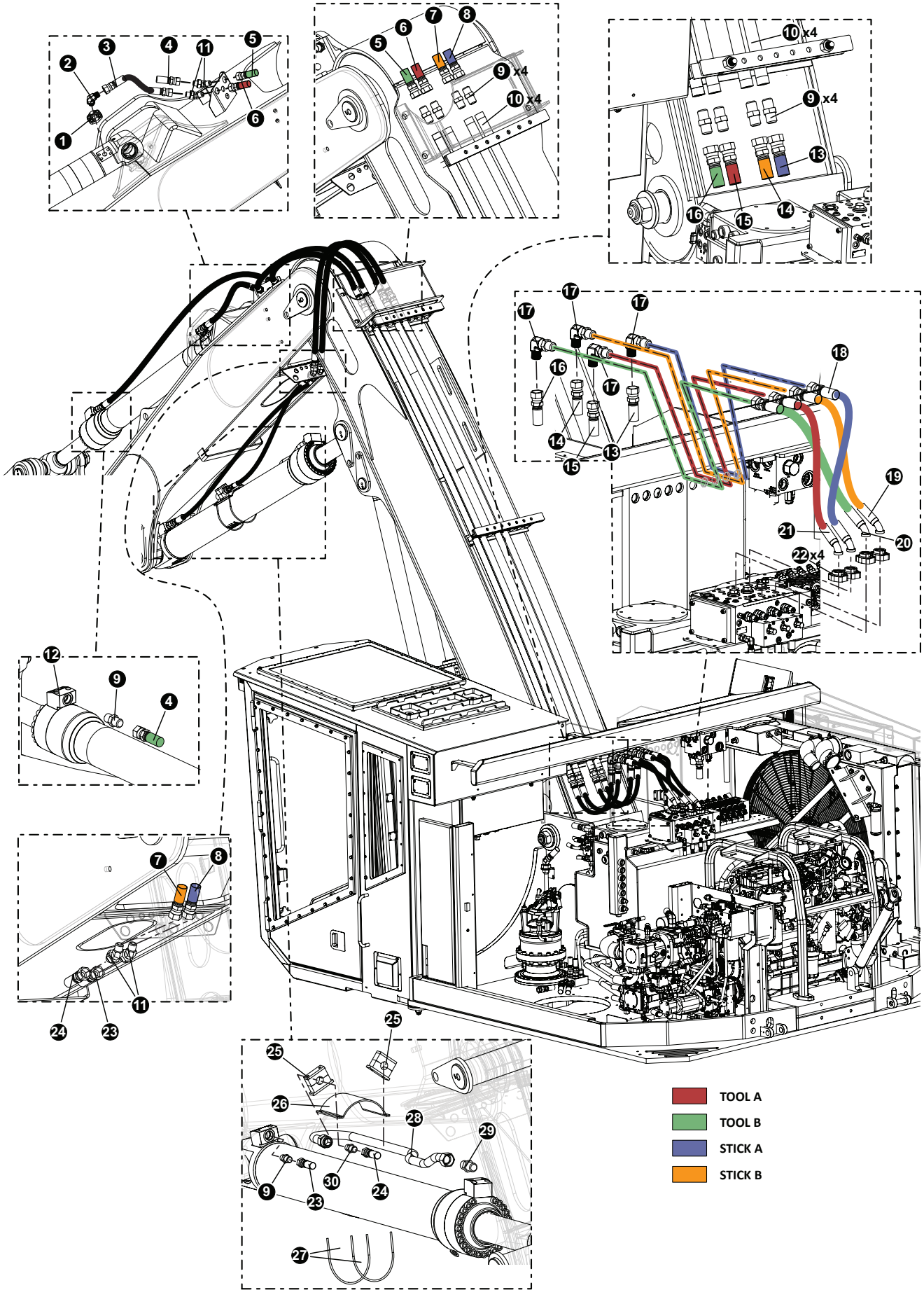
TOOL A
TOOL B
STICK A
STICK B

FELLER BUNCHER HYDRAULICS ASSEMBLY, AND INSTALLATION

STICK BOOM AND TOOL CYLINDER HYDRAULICS

REF	PART #	QTY	DESCRIPTION	SEE SECTION
1	15113	1	KIT, SPLIT FLANGE - 1” (CODE 62)	
2	15228	1	ELBOW, 90 - FF1868T-1616S	
3	57683	1	HOSE ASSEMBLY - 722TC26 16-16OS-16O4-SW (TOOL BASE TO BH)	
4	57683	1	HOSE ASSEMBLY - 722TC83 16-16OS-16OS-SW (TOOL ROD TO BH)	
5	57683	1	HOSE ASSEMBLY - 722TC65 16-16OS-16O4-SW (TOOL B MAIN TO STICK)	
6	57683	1	HOSE ASSEMBLY - 722TC64 16-16OS-16O4-SW (TOOL A MAIN TO STICK)	
7	57683	1	HOSE ASSEMBLY - 722TC69 16-16OS-16OS-SW (STICK B MAIN TO STICK)	
8	57683	1	HOSE ASSEMBLY - 722TC69 16-16OS-16OS-SW (STICK A MAIN TO STICK)	
9	15225	10	CONNECTOR, STR - FF1852T-1616S	
10	48306	4	TUBELINE, BENT - 1” x 132”	
11	54316	2	ELBOW, BULKHEAD UNION 45DEG #16	
12	57601	1	FLANGE, BLOCK ELBOW W184-16-16U CODE 62	
13	58239	1	HOSE ASSEMBLY - 722TC 44 16-16OS-16OS-SW (STICK A - MAIN BOOM)	
14	58239	1	HOSE ASSEMBLY - 722TC 44 16-16OS-16OS-SW (STICK A - MAIN BOOM)	
15	57683	1	HOSE ASSEMBLY - 787TC 44 16-16OS-16OS-SW (TOOL A - MAIN BOOM)	
16	57683	1	HOSE ASSEMBLY - 787TC 44 16-16OS-16OS-SW (TOOL B - MAIN BOOM)	
17	53680	4	FITTING, BULKHEAD UNION ELBOW 16 WELO-WN	
18	58239	1	HOSE ASSEMBLY - 722TC 22 16-16OS-PH4 (STICK A TO CHIMNEY)	
19	58239	1	HOSE ASSEMBLY - 722TC 28.5 16-16OS-PH4 (STICK B TO CHIMNEY)	
20	58239	1	HOSE ASSEMBLY - 722TC 29.5 16-16OS-PH4 (TOOL B TO CHIMNEY)	
21	58239	1	HOSE ASSEMBLY - 722TC 23.5 16-16OS-PH4 (TOOL A TO CHIMNEY)	
22	15113	1	KIT, SPLIT FLANGE - 1” (CODE 62)	
23	57683	1	HOSE ASSEMBLY - 722TC 76 16-16OS-16OS-SW (STICK A TO BH)	
24	57683	1	HOSE ASSEMBLY - 722TC 48 16-16OS-16OS-SW (STICK B TO BH)	
25	52372	2	CLAMP, STEEL TUBELINES(WHEEL DRIVE)SMALL	
26	48481	1	ADJUSTABLE CYLINDER HOSE PLATE	
27	48689	2	U-BOLT - 8.13 X 7 X.25	
28	57520	1	TUBELINE, STICK BOOM CYLINDER	
29	17063	1	CONNECTOR, STR - FF1852T-2016S	
30	20455	1	CONNECTOR, REDUCER - ORS FF2281T-1620S	

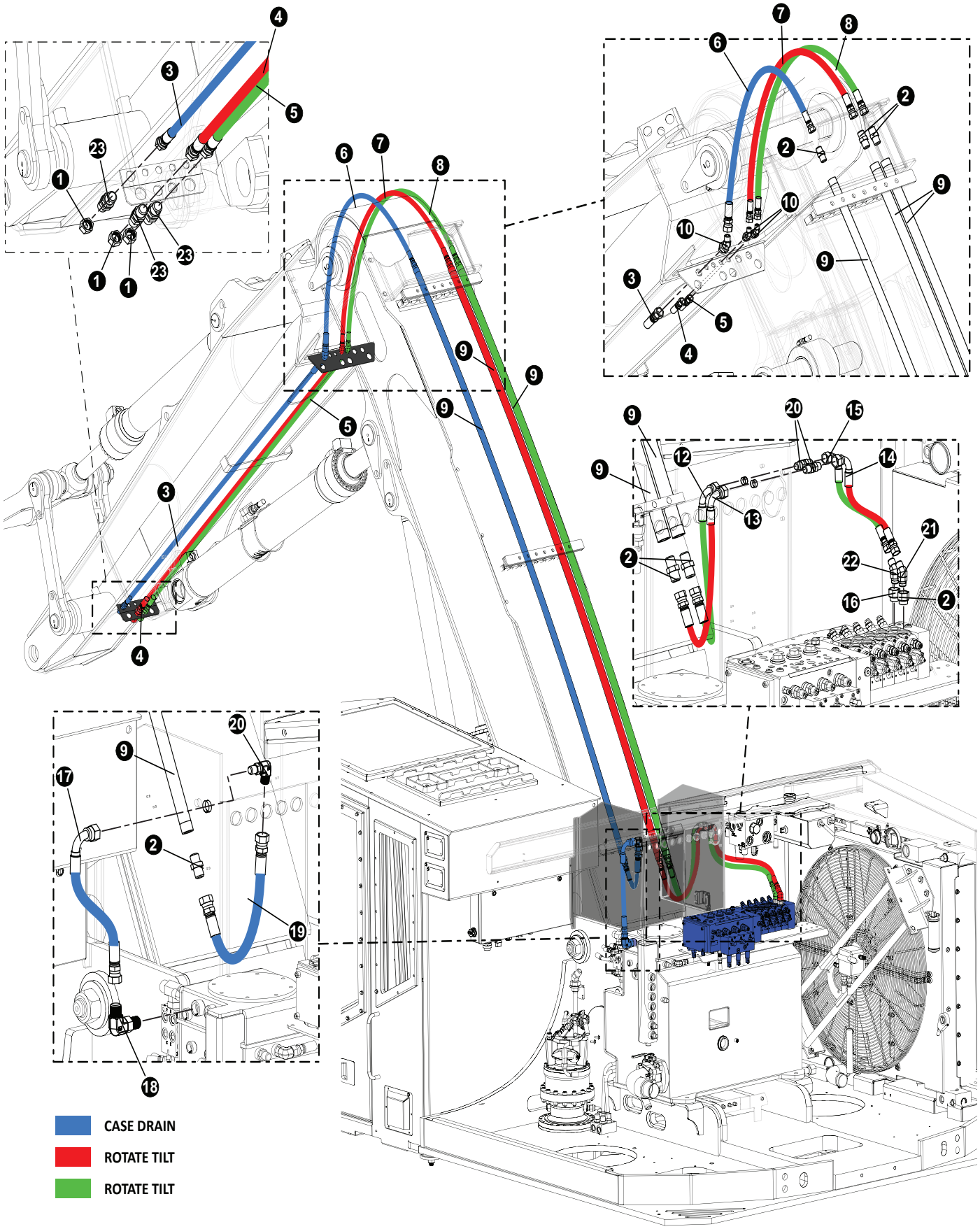
CASE DRAIN
ROTATE TILT
ROTATE TILT

FELLER BUNCHER HYDRAULICS ASSEMBLY, AND INSTALLATION

CASE DRAIN AND ROTATE HYDRAULICS

REF	PART #	QTY	DESCRIPTION	SEE SECTION
1	15437	3	CAP - FF9863-12S	
2	15152	7	CONNECTOR, STR - FF1852T-1212S	
3	57683	1	HOSE ASSEMBLY - **722TC98 12-12OS-12OS-SW** (CASE BH TO BH)	
4	57683	1	HOSE ASSEMBLY - **722TC98 12-12OS-12OS-SW** (ROTATE BH TO BH)	
5	57683	1	HOSE ASSEMBLY - **722TC98 12-12OS-12OS-SW** (ROTATE BH TO BH)	
6	57683	1	HOSE ASSEMBLY - **722TC73 12-12OS-12-12OS-SW** (CASE MAIN TO STICK)	
7	57683	1	HOSE ASSEMBLY - **722TC74 12-12OS-12-12OS-SW** (ROTATE MAIN TO STICK)	
8	57683	1	HOSE ASSEMBLY - **722TC74 12-12OS-12-12OS-SW** (ROTATE MAIN TO STICK)	
9	48307	3	TUBELINE, BENT - .75” X 130”	
10	55509	3	FITTING, BULKHEAD UNION - 45 DEGREE #12	
12	57683	1	HOSE ASSEMBLY - **722TC44 12-12OS-12O9** (ROTATE VALVE TO CHIMNEY)	
13	57683	1	HOSE ASSEMBLY - **722TC44 12-12OS-12O9** (ROTATE VALVE TO CHIMNEY)	
14	57683	1	HOSE ASSEMBLY - **722TC44 12-12OS-12O9** (ROTATE TO CHIMNEY)	
15	57683	1	HOSE ASSEMBLY - **722TC43 12-12OS-12O9** (ROTATE TO CHIMNEY)	
16	25040	1	BUSHING, REDUCER - 6410-16-12	
17	58239	1	HOSE ASSEMBLY - **187TC 22.5 12-12OS-12O9** (BOOM CASE TO TANK)	
18	17688	1	ELBOW, 90 - FF1868T-1212S	
19	(See Description)	1	HOSE ASSEMBLY - **287TC44-12OS-12OS-SW** (ROTATE TO CHIMNEY)	
20	24188	3	ELBOW, 90 BULKHEAD - 855BH-TT-12	
21	19592	1	ELBOW, 45 SWIVEL - FF2133T-1212S	
22	19127	1	ELBOW, 45 - FF2068T-1212S	
23	19754	3	CONNECTOR, STR BULKHEAD - 12 WLO-WLNL-S	

PAGE INTENTIONALLY LEFT BLANK

SECTION FB-1
FELLER BUNCHER BOOM ASSEMBLY AND INSTALLATION

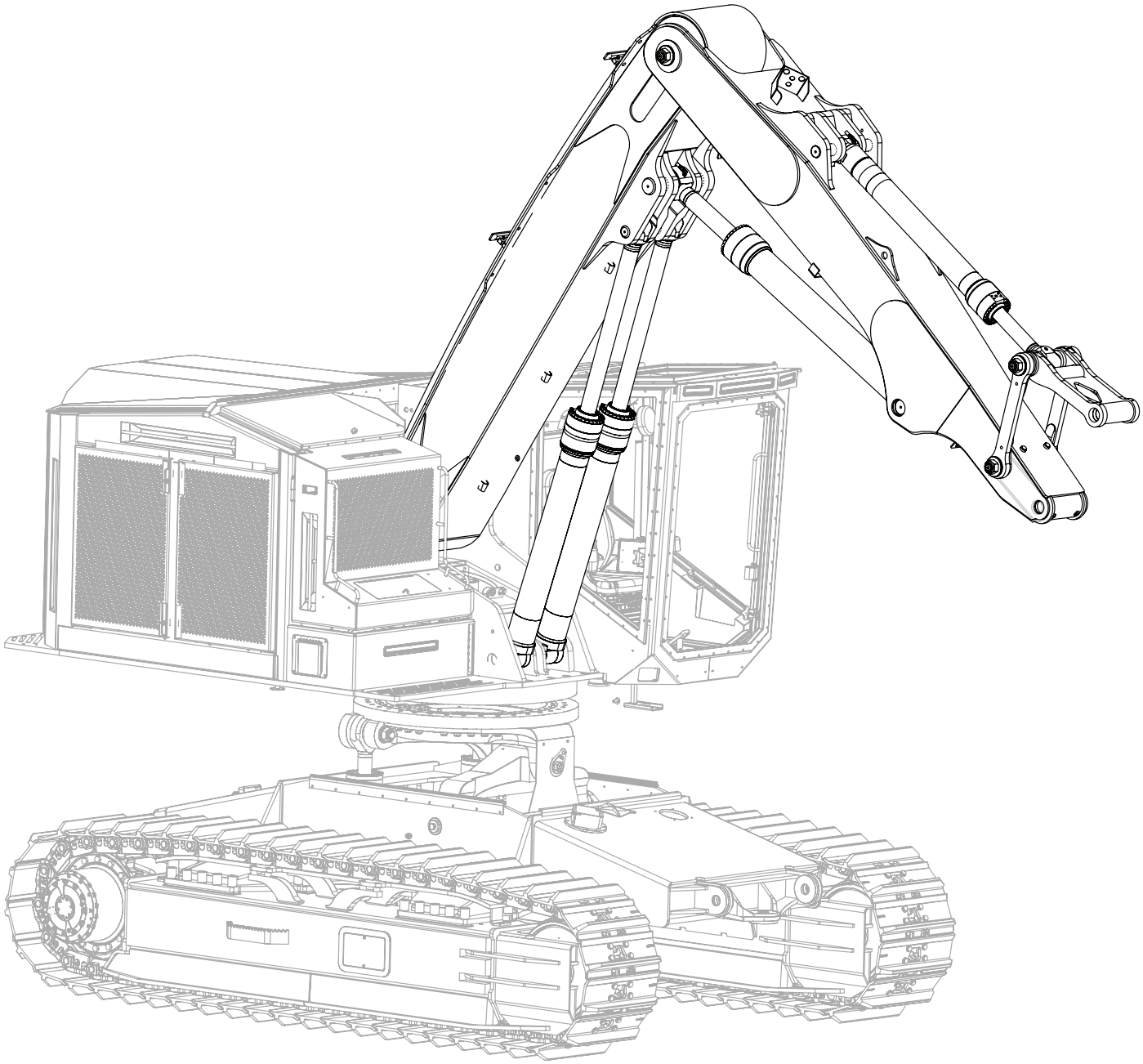

FELLER BUNCHER BOOM ASSEMBLY AND INSTALLATION

MAIN BOOM ASSEMBLY AND INSTALLATION

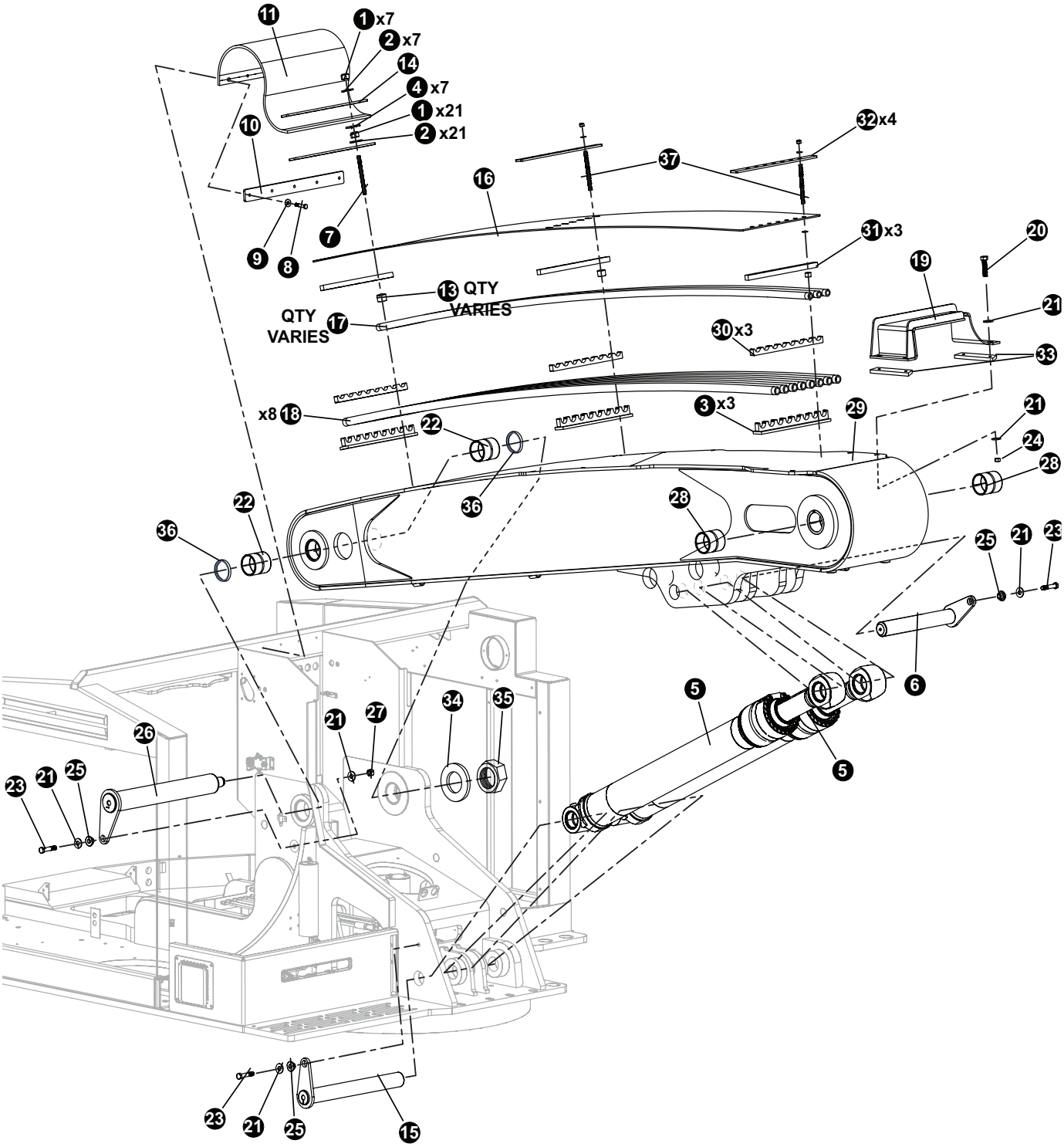

FELLER BUNCHER BOOM ASSEMBLY AND INSTALLATION

MAIN BOOM ASSEMBLY AND INSTALLATION

REF	PART #	QTY	DESCRIPTION	SEE SECTION
1	15563	7	NUT, nylock - 5/8”	
2	10771	7	WASHER, SAE flat - 5/8”	
3	48275	3	WELDMENT, TUBELINE CLAMP ASSY - 8 TUBES	
4	10805	7	WASHER, FLAT - .625” EXTRA WIDE	
5	(Click Here)	1	MAIN BOOM CYLINDER	FB-2
6	48532	1	PIN, MAIN CYL BASE END - TL775	
7	58205	8	STUD, 5/8 X 9” 765 BOOM	
8	10402	5	BOLT - .375” X 1.25”	
9	10802	5	WASHER, FLAT - .375”	
10	48662	1	BAR, DEBRIS FLAP HOLD DOWN	
11	48661	1	RUBBER, DEBRIS FLAP- TAIL SWING	
12	48343	3	CLAMP, SADDLE - TOP	
13	48789	3	SPACER, TUBELINE - .5”	
14	48663	1	BAR, DEBRIS FLAP HOLD-DOWN	
15	48530	1	PIN, MAIN BOOM CYL BASE TO UPPER - TL775	
16	48791	1	BELTING, F/B MAIN BOOM TOP - 775	
17	48307	6	TUBELINE, BENT - .75” X 130”	
18	48306	8	TUBELINE, BENT - 1” x 132”	
19	48804	1	GUARD, HOSE - MAIN BOOM (775)	
20	10775	4	BOLT - .75” X 2.5”	
21	15550	2	WASHER, SAE FLAT - .75”	
22	48660	2	BUSHING, BRONZE 4.5 OD X 4.0 ID X 5 LONG	
23	10841	1	BOLT - .75” X 3.5”	
24	10817	4	NUT, LOCK - .75”	
25	18570	2	WASHER, PIN RETAINING	
26	48473	1	PIN, MAIN BOOM TO UPPER - 775	
27	10817	1	NUT, LOCK - .75”	
28	48928	2	BUSHING, 5.00” OD x 4.00” ID X 5.00” L	
29	48930	1	WELDMENT, MAIN BOOM FB - 775 D SERIES	
30	48273	3	STUD, 5/8 X 9” 765 BOOM	
31	48343	3	CLAMP, SADDLE - TOP	
32	48663	4	BAR, DEBRIS FLAP HOLD-DOWN	
33	48798	2	SPACER, TREE GUARD	
34	48771	2	WASHER - 6 OD x 2.13 ID	
35	10728	1	NUT, NYLOCK - 2” (ZINC PLATED)	
36	48900	2	Seal, 4.00 x 4.50 x .312	
37	58204	16	STUD, 5/8 X 7” 765 BOOM	

☐ Kit or Assembly - includes all items indented underneath.
📖 See referenced page for component or assembly breakdown.

FELLER BUNCHER BOOM ASSEMBLY AND INSTALLATION

STICK BOOM ASSEMBLY AND INSTALLATION

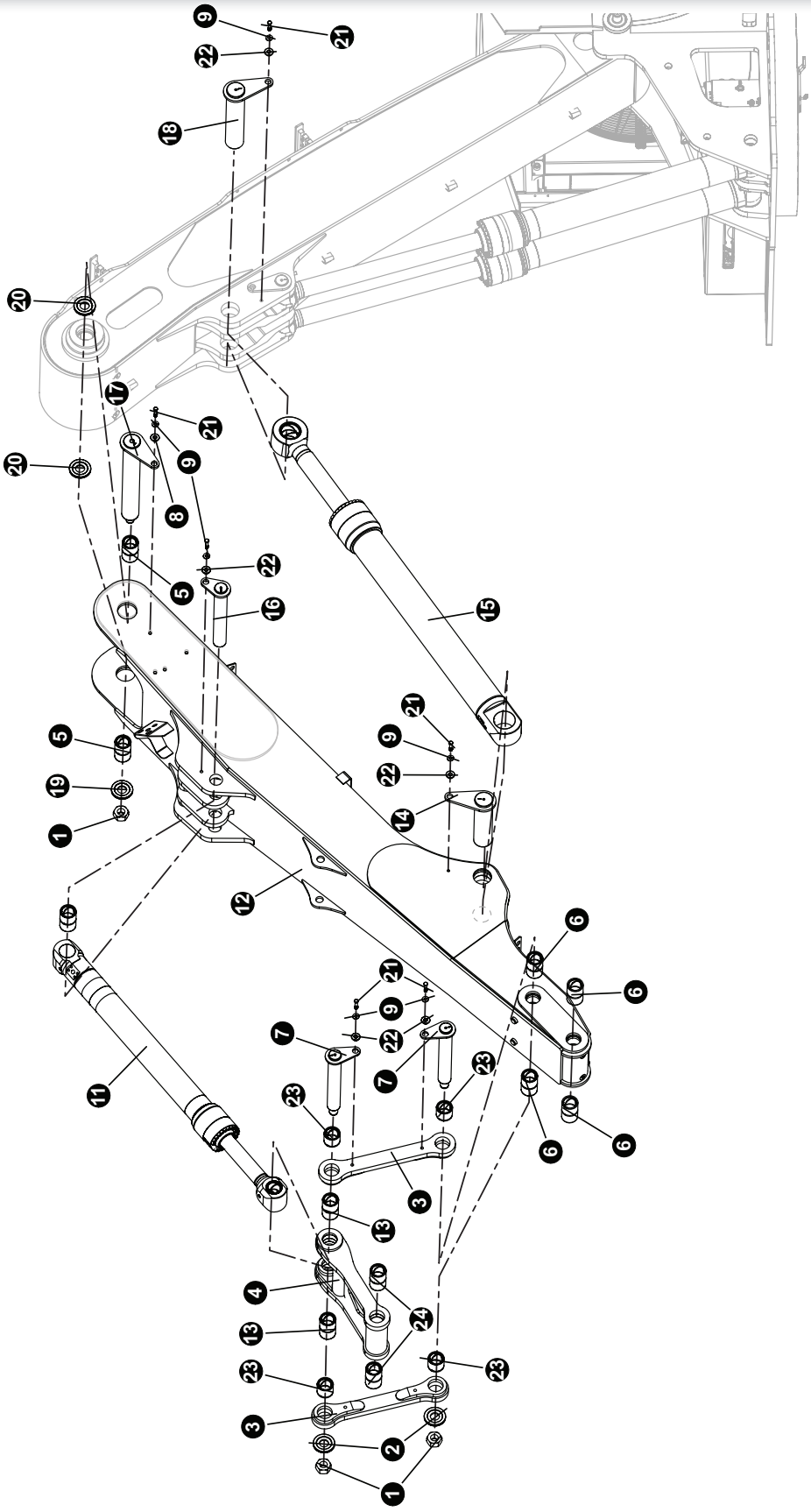

FELLER BUNCHER BOOM ASSEMBLY AND INSTALLATION

STICK BOOM ASSEMBLY AND INSTALLATION

REF	PART #	QTY	DESCRIPTION	SEE SECTION
1	10728	3	NUT, nylock - 2”	
2	12021	2	WASHER, burned	
3	48773	2	BAR, BOOM TO TOOL CYLINDER LINKAGE	
4	48765	1	WELDMENT, LINK BOOM TO TOOL CYL - TAIL	
5	48116	2	BUSHING - 4.5” X 4” X 2.50”	
6	48425	2	BUSHING, 3.5”X3.0”X 4.5”	
7	48310	2	PIN, 4-BAR - 3” x 20”	
8	54136	1	WASHER, pin retaining	
9	15550	1	WASHER, SAE flat - 3/4”	
10	10775	1	BOLT - 3/4” x 2.5”	
11	(Click Here)	1	TOOL TILT CYLINDER	FB-2
12	49000	1	WELDMENT, STICK BOOM F/B	
13	48425	2	BUSHING, 3.5”X3.0”X 4.5”	
14	48533	1	PIN, STICK CYL CYLINDER - TL765	
15	(Click Here)	1	STICK BOOM (JIB) CYLINDER	FB-2
16	48534	1	PIN, TOOL TILT CYL BASE	
17	48473	1	PIN, MAIN BOOM TO UPPER / STICK	
18	48533	1	PIN, STICK CYL CYLINDER - TL765	
19	48771	1	WASHER - 6 OD x 2.13 ID	
20	(No Part #)	AR	SHIM - 7 gauge	
	(No Part #)	AR	SHIM - 10 gauge	
	(No Part #)	AR	SHIM - 14 gauge	
21	15549	1	BOLT - 3/4” x 2”	
22	18570	1	WASHER, pin retaining	
23	48303	4	BUSHING, 3.5 X 3.0X 2.5	
24	48303	2	BUSHING, 3.5 X 3.0X 2.5	
25	48363	1	BOX, BOOM LIGHT - TAIL	

FELLER BUNCHER BOOM ASSEMBLY AND INSTALLATION

MAIN BOOM AND STICK BOOM GREASE LINES

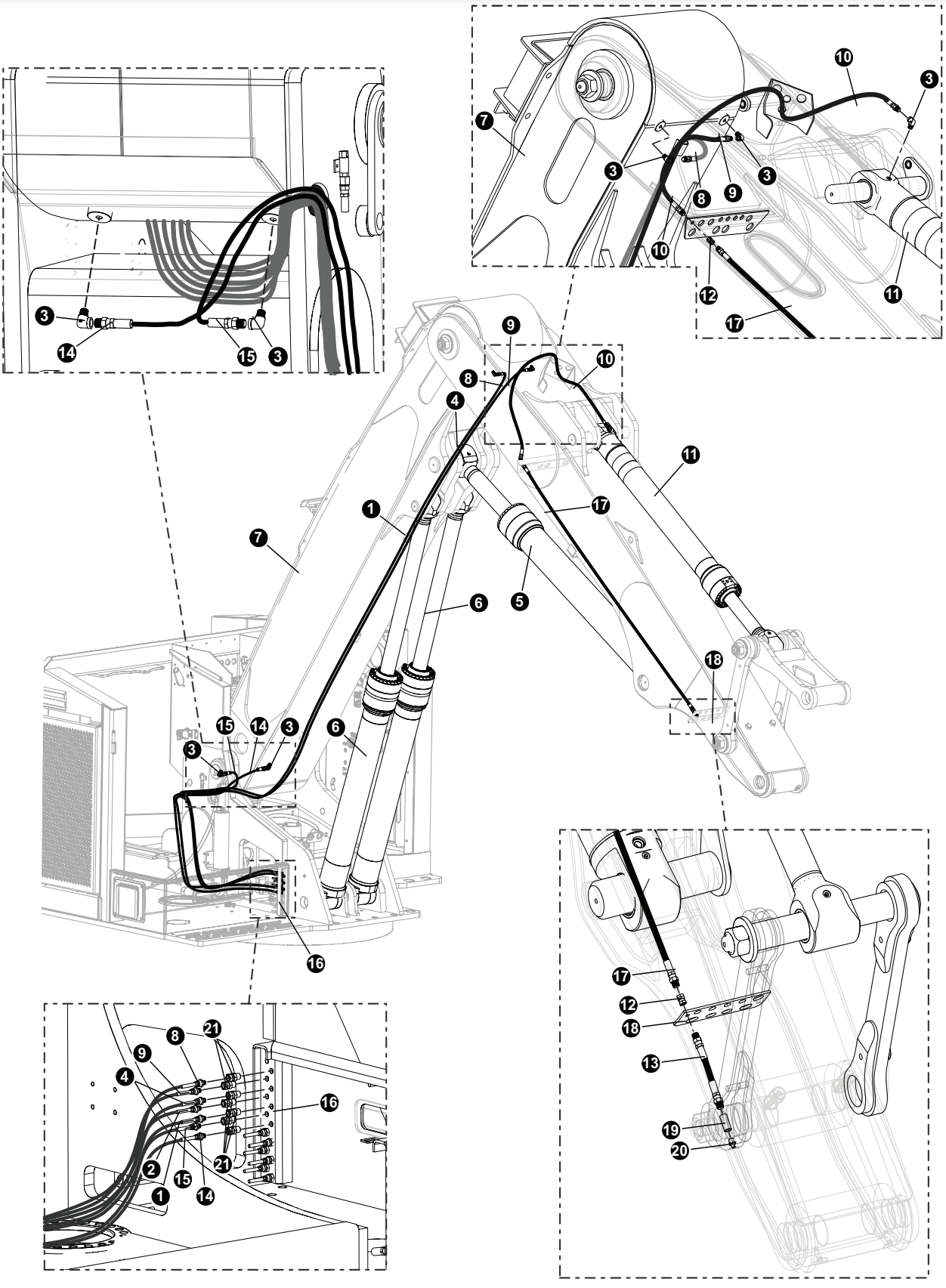

FELLER BUNCHER BOOM ASSEMBLY AND INSTALLATION

MAIN BOOM AND STICK BOOM GREASE LINES

REF	PART #	QTY	DESCRIPTION	SEE SECTION
1	(See Description)	1	MAIN BOOM CYLINDER ROD **HOSE PART # HLB190 02-02PS-04JS-W**	
2	(See Description)	1	MAIN BOOM CYLINDER ROD **HOSE PART # HLB190 02-02PS-04JS-W**	
3	22281	8	FITTING, 90° - 5546132	
4	(See Description)	1	STICK CYLINDER ROD **HOSE PART # HLB210 02-02PS-04JS-W**	
5	(Click Here)	1	STICK BOOM CYLINDER.	FB-2
6	(Click Here)	2	MAIN BOOM CYLINDER	FB-2
7	(Click Here)	1	MAIN BOOM ASSEMBLY	FB-1
8	(See Description)	1	STICK CYLINDER ROD **HOSE PART # HLB265 02-02PS-04JS-W**	
9	(See Description)	1	STICK CYLINDER ROD **HOSE PART # HLB265 02-02PS-04JS-W**	
10		1	TOOL CYLINDER BASE HLB65 02-02PS-04JS	
11	(Click Here)	1	TOOL CYLINDER	
12	15658	2	CONNECTOR, STR BULKHEAD - 2239-2-4S	
13	(See Description)	1	GREASE JUMPER **HOSE PART # HLB10 02-02PS-02PS**	
14	(See Description)	1	GREASE JUMPER **HOSE PART # HLB94 02-02PS-02JS-WS100**	
15	(See Description)	1	GREASE JUMPER **HOSE PART # HLB94 02-02PS-02JS-WS100**	
16	(Click Here)	1	UPPER TURNTABLE	
17	(See Description)	1	GREASE JUMPER **HOSE PART # HLB99 02-04JS-04JS-W**	
18	(Click Here)	1	STICK BOOM ASSEMBLY	FB-2
19				
20	10704	7	FITTING, straight grease - 1/8” pipe thread	
21	15658	7	CONNECTOR, straight bulkhead - 2239-2-4S	
22	21671	2	ELBOW, 45 - 5546134	

☐ Kit or Assembly - includes all items indented underneath.
🕮 See referenced page for component or assembly breakdown.

PAGE INTENTIONALLY LEFT BLANK

SECTION FB-2
FELLER BUNCHER BOOM CYLINDER ASSEMBLY

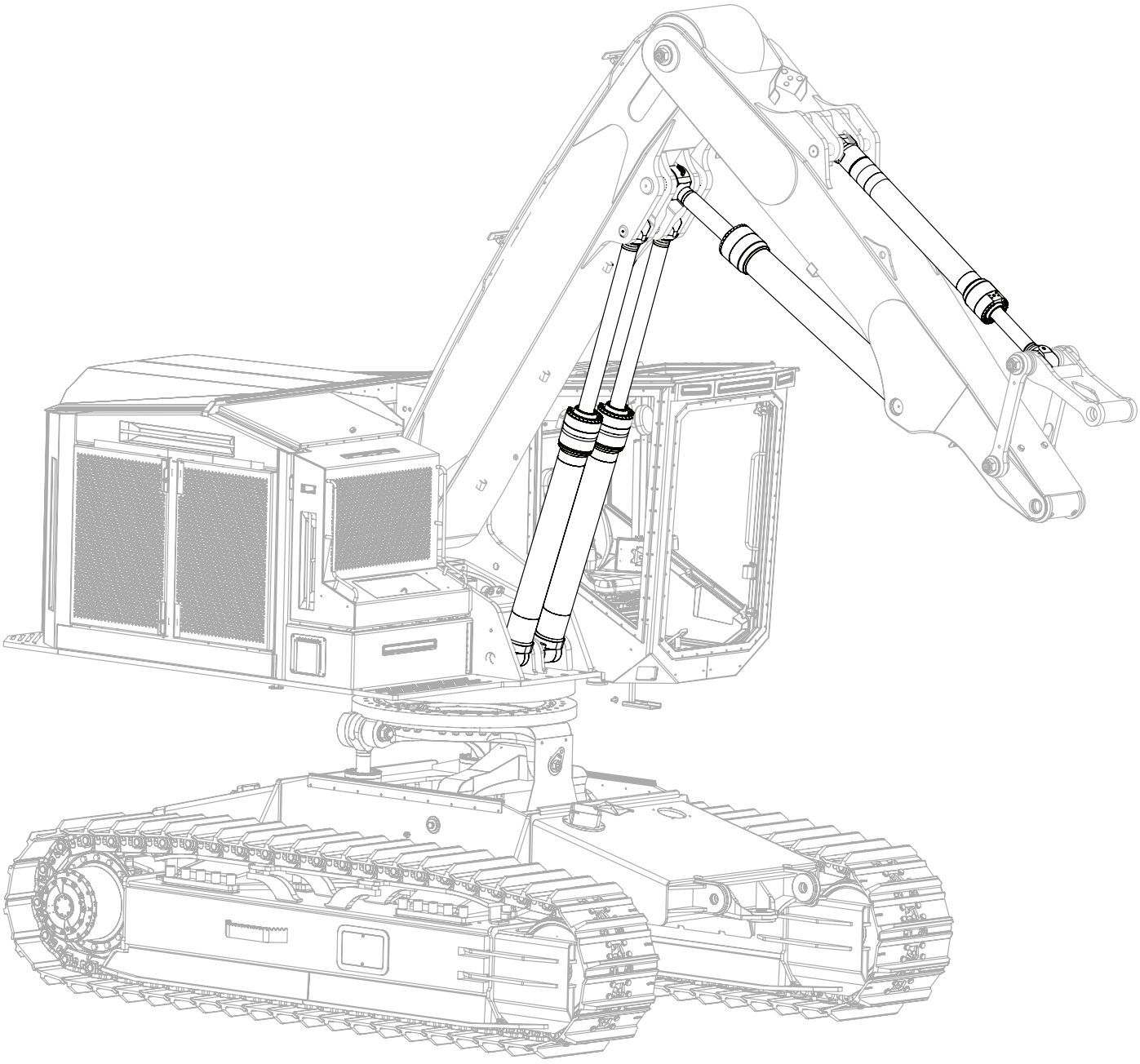

FELLER BUNCHER BOOM CYLINDER ASSEMBLY

MAIN BOOM (HOIST) CYLINDER - 6”

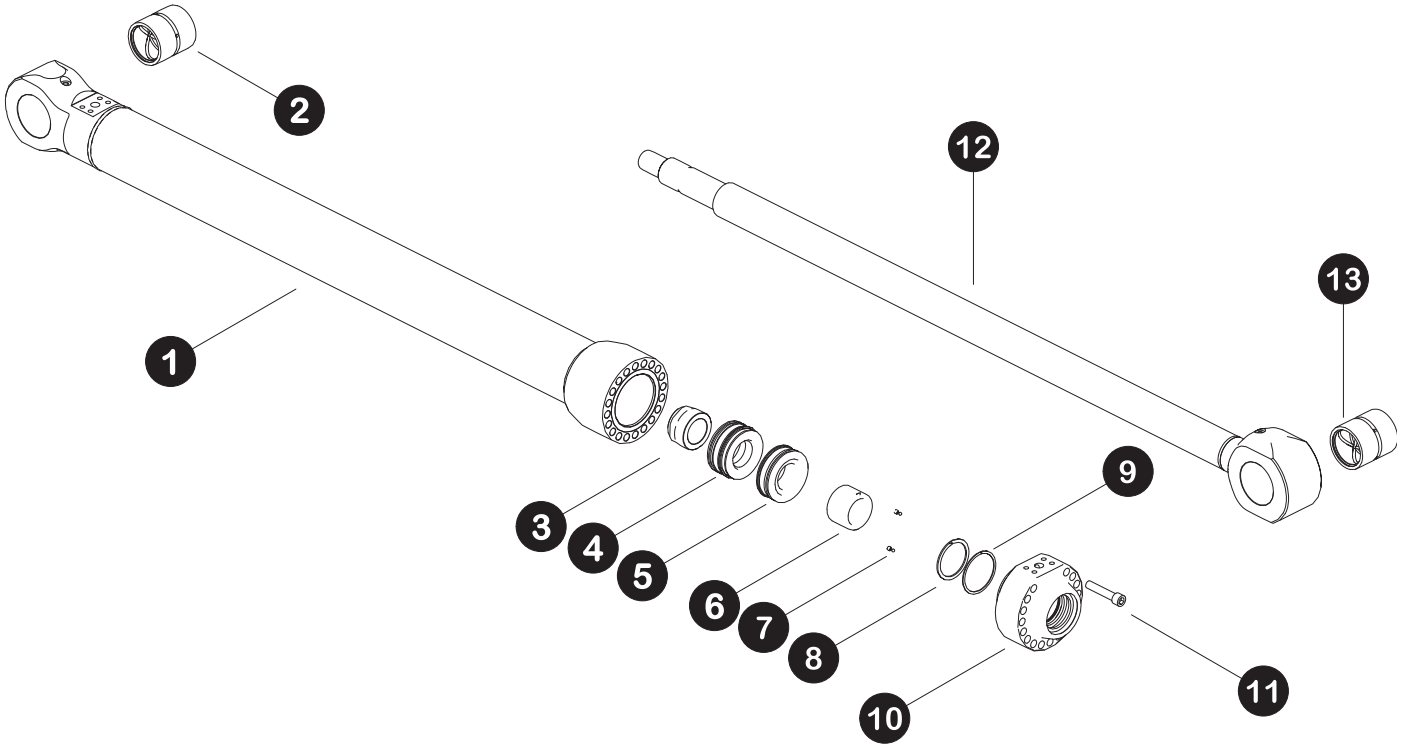

Parts 4229 07/17
12.5

FELLER BUNCHER BOOM CYLINDER ASSEMBLY

MAIN BOOM (HOIST) CYLINDER - 6”

REF	PART #	QTY	DESCRIPTION	SEE SECTION
-	55463	1	CYLINDER, MAIN - TL775 (4.5 Inch Dia) 54” Stroke	
1	TP450100	1	BARREL ASSEMBLY	
2	BB300400	2	BUSHING	
3	(NO REPLACEMENT #)	1	NUT, M58	
4	TP450110	1	PISTON, BACK	
5	TP450109	1	PISTON, FRONT	
6	TC110217	1	SLEEVE, Cushion	
7	NSS	2	BALL AND SETSCREW	
8	NSS	1	RING, spiral retaining	
9	NSS	1	RING, spiral retaining	
10	TP450108	1	GLAND, head	
11	(NO REPLACEMENT #)	17	BOLT, Metric	
12	TP450105	1	ROD ASSEMBLY	
13	BB300400	2	BUSHING	
-	SK45007500	1	KIT, seal repair - main boom cylinder 775	

FELLER BUNCHER BOOM CYLINDER ASSEMBLY

STICK BOOM (JIB) STANDARD CYLINDER (6.5" DIA)

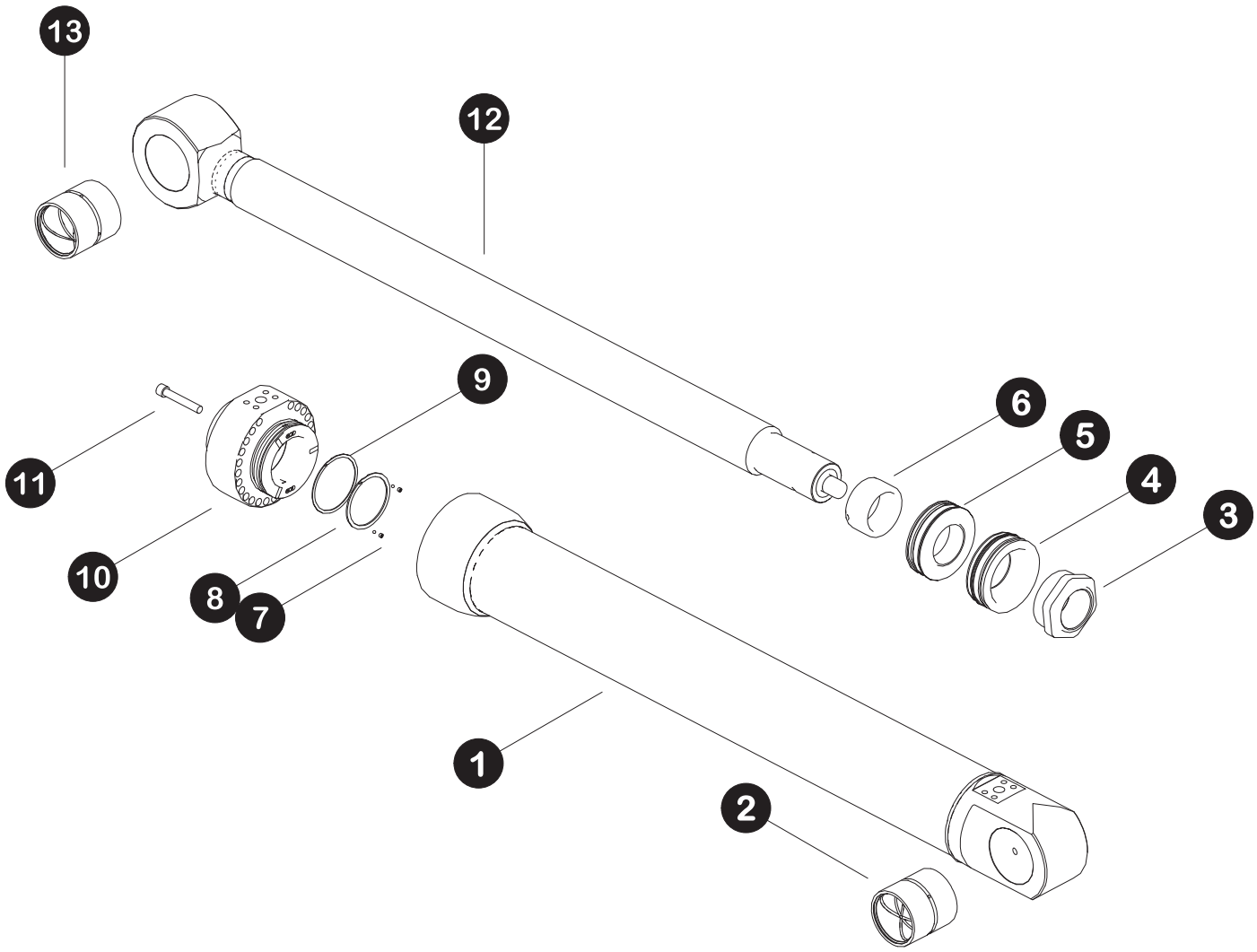

Parts 4230 07/17
12.5

FELLER BUNCHER BOOM CYLINDER ASSEMBLY

STICK BOOM (JIB) STANDARD CYLINDER (6.5" DIA)

REF	PART #	QTY	DESCRIPTION . . . . . SEE PAGE
-	55464	1	CYLINDER, STICK - TL775 (6.5 INCH DIA) 54" Stroke
1	TP650100	1	BARREL ASSEMBLY
2	BB425500	1	BUSHING
3	(NO REPLACEMENT #)	1	NUT M90
4	TP650110	1	PISTON, Back
5	TP650109	1	PISTON, Front
6	TP650117	1	SLEEVE, Cushon
7	(NO REPLACEMENT #)	1	Int spiral retaining ring
8	(NO REPLACEMENT #)	1	Int spiral retaining ring
9	TP650108	1	HEAD GLAND
10	(NO REPLACEMENT #)	25	BOLT - M16X100 (173 FT-LBS)
11	TP650105	1	ROD
12	BB425500	1	BUSHING
-	SK65011000	1	KIT, seal repair - Stick cylinder

(Please Verify Part Number Stamped on Base End of Cylinder Before Ordering Parts)

FELLER BUNCHER BOOM CYLINDER ASSEMBLY

TOOL TILT CYLINDER

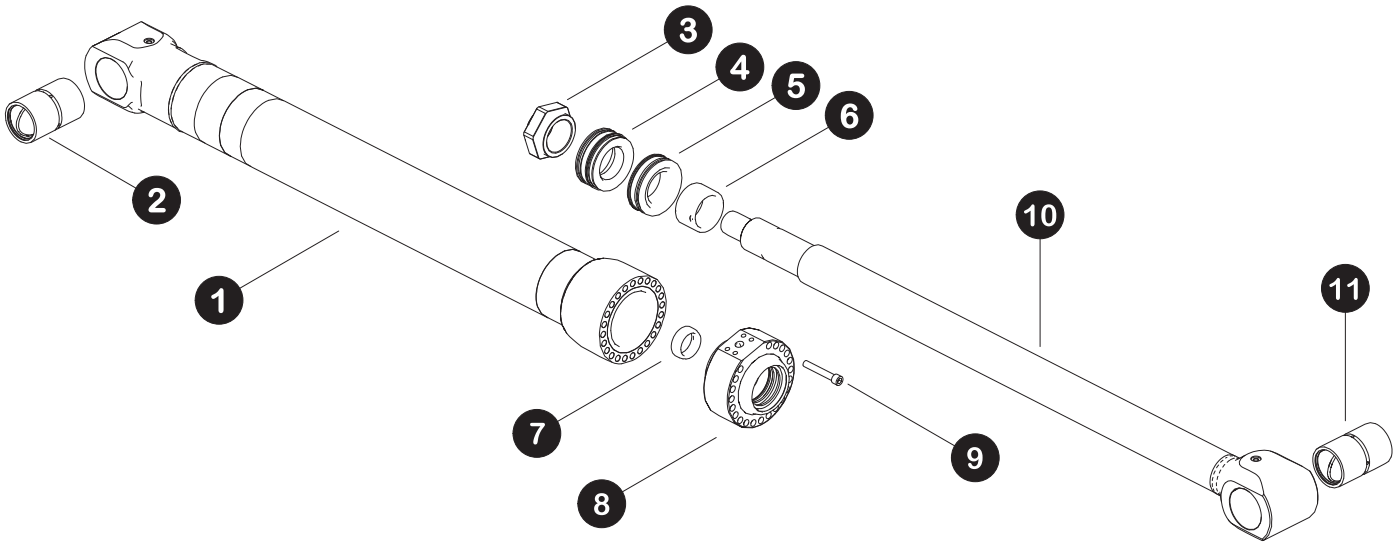

Parts 4231 07/17
12.5

FELLER BUNCHER BOOM CYLINDER ASSEMBLY
TOOL TILT CYLINDER

REF	PART #	QTY	DESCRIPTION	SEE SECTION
-	48065-FB	1	CYLINDER, TOOL TILT - TL775	
1	TP130200-FB	1	BARREL ASSEMBLY	
2	BB300575-FB	2	BUSHING	
3	(NO REPLACEMENT #)	1	NUT, M75	
4	TP130110-FB	1	PISTON, BACK	
5	TP130109-FB	1	PISTON, FRONT	
6	TC130117-FB	1	SLEEVE, Cushion	
7	TC12021-FB	1	SLEEVE,	
8	TC130108FB	1	GLAND, head	
9	(NO REPLACEMENT #)	17	BOLT, Metric	
10	TP130105-FB	1	ROD ASSEMBLY	
11	BB300575-FB	2	BUSHING	
-	57770-FB	1	KIT, seal repair - tool tilt cylinder	

PAGE INTENTIONALLY LEFT BLANK

SECTION HB-1
HARVESTER BOOM ASSEMBLY AND INSTALLATION

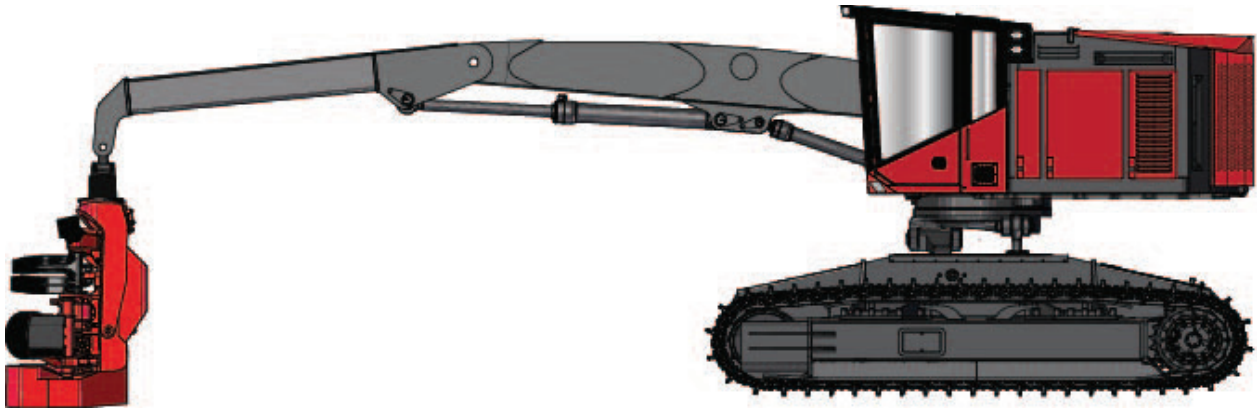

HARVESTER BOOM ASSEMBLY AND INSTALLATION

MAIN BOOM ASSEMBLY AND INSTALLATION

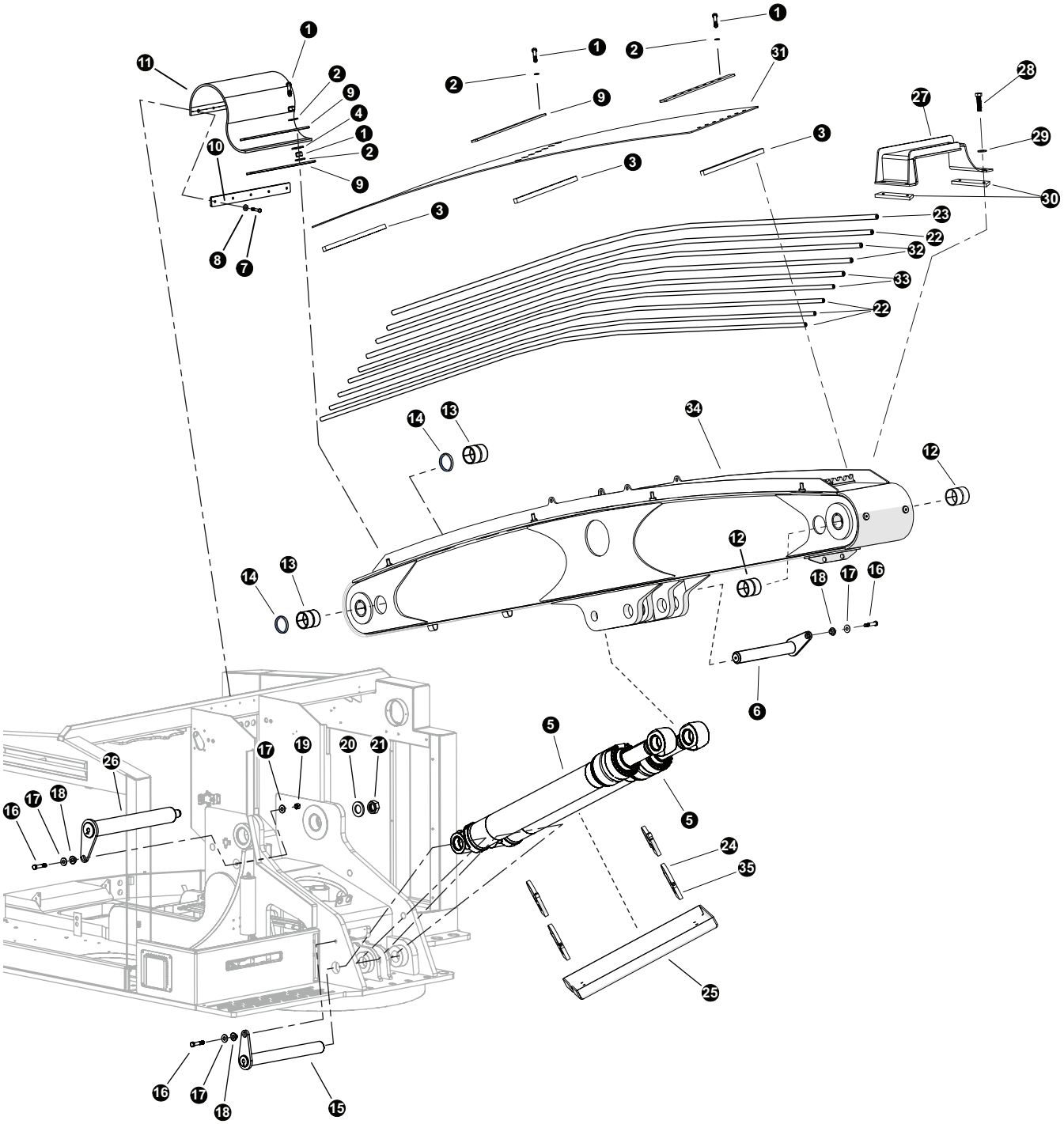

HARVESTER BOOM ASSEMBLY AND INSTALLATION

MAIN BOOM ASSEMBLY AND INSTALLATION

REF	PART #	QTY	DESCRIPTION	SEE SECTION
1	23262	21	BOLT - .625” X 3.25”	
2	10771	21	WASHER, SAE flat - 5/8”	
3	48590	4	CLAMP, SADDLE - DRILLED - HARVESTER	
3	48275	3	WELDMENT, TUBELINE CLAMP ASSY - 8 TUBES	
4	10805	7	WASHER, FLAT - .625” EXTRA WIDE	
5	55463	1	MAIN BOOM CYLINDER	(SEE - HB-2-1)
6	48532	1	PIN, MAIN CYL BASE END - TL775	
7	10402	5	BOLT - .375” X 1.25”	
8	10802	5	WASHER, FLAT - .375”	
9	48663	1	BAR, DEBRIS FLAP HOLD-DOWN	
10	48662	1	BAR, DEBRIS FLAP HOLD DOWN	
11	48661	1	RUBBER, DEBRIS FLAP- TAIL SWING	
12	48115	2	BUSHING - 4.5” X 4” X 5”	
13	48928	2	BUSHING, 5.00” OD x 4.00” ID X 5.00” L	
14	48900	2	SEAL, DUST 765 MAIN BOOM	
15	48530	1	PIN, MAIN BOOM CYL BASE TO UPPER - TL775	
16	10841	3	BOLT - .75” X 3.5”	
17	15550	3	WASHER, SAE FLAT - .75”	
18	18570	3	WASHER, PIN RETAINING	
19	10817	1	NUT, LOCK - .75”	
20	48771	1	WASHER - 6 OD x 2.13 ID	
21	10728	1	NUT, NYLOCK - 2” (ZINC PLATED)	
22	48629	1	TUBELINE, BENT 765 1 X 204	
23	48699	1	TUBELINE, MAIN BOOM RETURN - 765	
24	62584	4	PLATE, CYLINDER STRAP - SHOVEL MAIN	
25	62577	1	PLATE, MAIN CYL GUARD - SHOVEL 775D	
26	48473	1	PIN, MAIN BOOM TO UPPER - 775	
27	48804	1	GUARD, HOSE - MAIN BOOM (765)	
28	10775	4	BOLT - .75” X 2.5”	
29	15550	4	WASHER, SAE FLAT - .75”	
30	48798	2	SPACER, TREE GUARD	
31	48791	1	BELTING, F/B MAIN BOOM TOP - 765	
32	48628	2	TUBELINE, BENT 765 3/4 X 204	
33	48627	2	TUBELINE, BENT 765 1/2 X 204	
34	62010	1	WELDMENT, MAIN BOOM HARVESTER - 775 D SERIES	
35	62579	4	PLATE, CYLINDER CLAMP - GAURD SHOVEL	

☐ Kit or Assembly - includes all items indented underneath.
📖 See referenced page for component or assembly breakdown.

HARVESTER BOOM ASSEMBLY AND INSTALLATION

STICK BOOM ASSEMBLY AND INSTALLATION

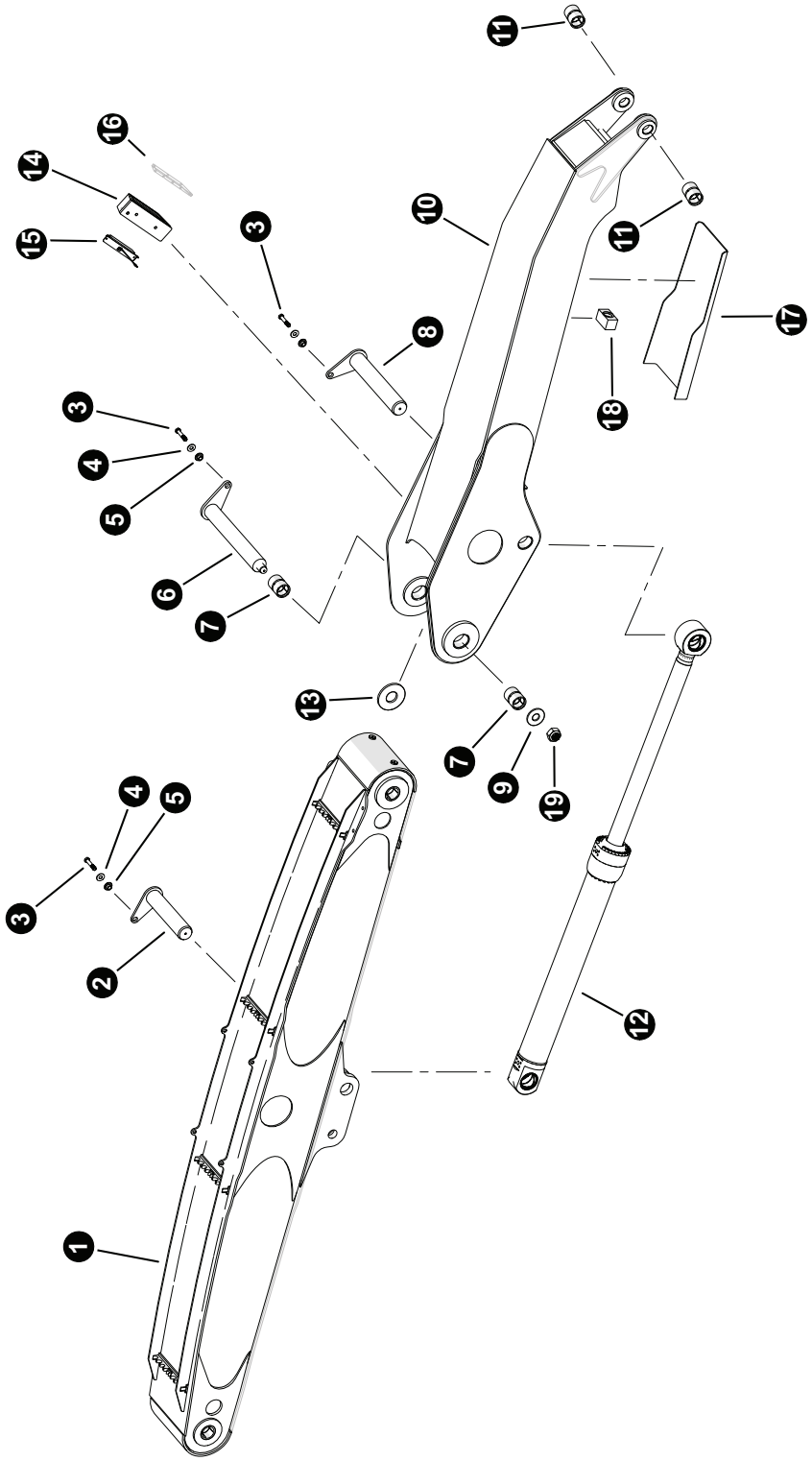

HARVESTER BOOM ASSEMBLY AND INSTALLATION

STICK BOOM ASSEMBLY AND INSTALLATION

REF	PART #	QTY	DESCRIPTION	SEE SECTION
1	62010	1	MAIN BOOM WELDMENT	
2	48530	1	PIN, MAIN BOOM CYL BASE TO UPPER	
3	10841	2	BOLT - .75” X 3.5”	
4	15550	2	WASHER, SAE flat - 3/4”	
5	18570	2	WASHER, PIN RETAINING	
6	48473	1	PIN, MAIN BOOM TO UPPER / STICK	
7	48116	2	BUSHING - 4.5” X 4” X 2.50”	
8	48535	1	PIN, STICK CYLINDER - (ROD)	
9	60758	1	WASHER, burned	
10	48645	1	WELDMENT, STICK BOOM F/B	
11	48425	2	BUSHING, 3.5”X3.0”X 4.5”	
12	55464	1	STICK BOOM (JIB) CYLINDER	(SEE - HB-2-3)
13	(No Part #)	AR	SHIM - 7 gauge	
	(No Part #)	AR	SHIM - 10 gauge	
	(No Part #)	AR	SHIM - 14 gauge	
14	48357	1	ASSY. BOOM LIGHT BOX - TAILSWING	
15	57384	1	LIGHT, BOOM RADIUS - LED	
16	48362	1	GUARD, BOOM LIGHT	
17	48660	1	PLATE, HOSE GUARD	
18	48654	1	MANIFOLD, HARVESTER BOOM	
19	10728	1	NUT, nylock - 2”	

HARVESTER BOOM ASSEMBLY AND INSTALLATION

MAIN BOOM AND STICK BOOM GREASE LINES

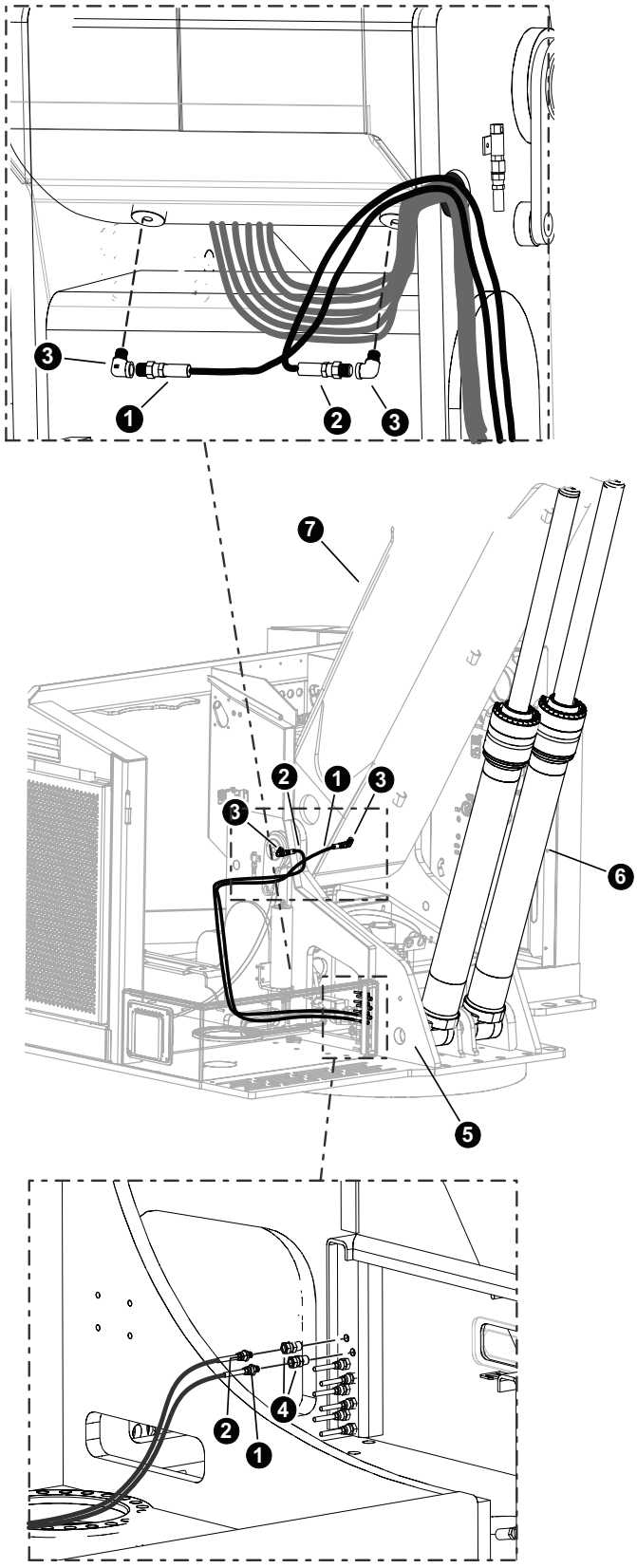

T4984

HARVESTER BOOM ASSEMBLY AND INSTALLATION

MAIN BOOM AND STICK BOOM GREASE LINES

REF	PART #	QTY	DESCRIPTION	SEE SECTION
1	(See Description)	1	GREASE JUMPER **HOSE PART # HLB94 02-02PS-02JS-WS100**	
2	(See Description)	1	GREASE JUMPER **HOSE PART # HLB94 02-02PS-02JS-WS100**	
3	22281	8	FITTING, 90° - 5546132	
4	15658	2	CONNECTOR, straight bulkhead - 2239-2-4S	
5		1	UPPER TURNTABLE	(SEE UP-1)
6		2	MAIN BOOM CYLINDER	(SEE - HB-2-1)
7		1	MAIN BOOM ASSEMBLY	(SEE - HB-1-2)

PAGE INTENTIONALLY LEFT BLANK

SECTION HB-2
FELLER BUNCHER BOOM CYLINDER ASSEMBLY

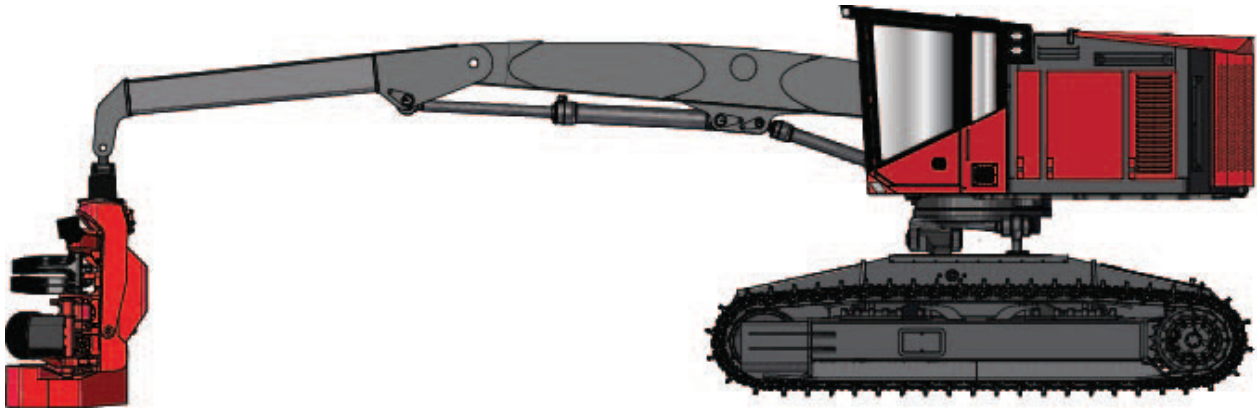

HARVESTER BOOM CYLINDER ASSEMBLY

MAIN BOOM (HOIST) CYLINDER - 6”

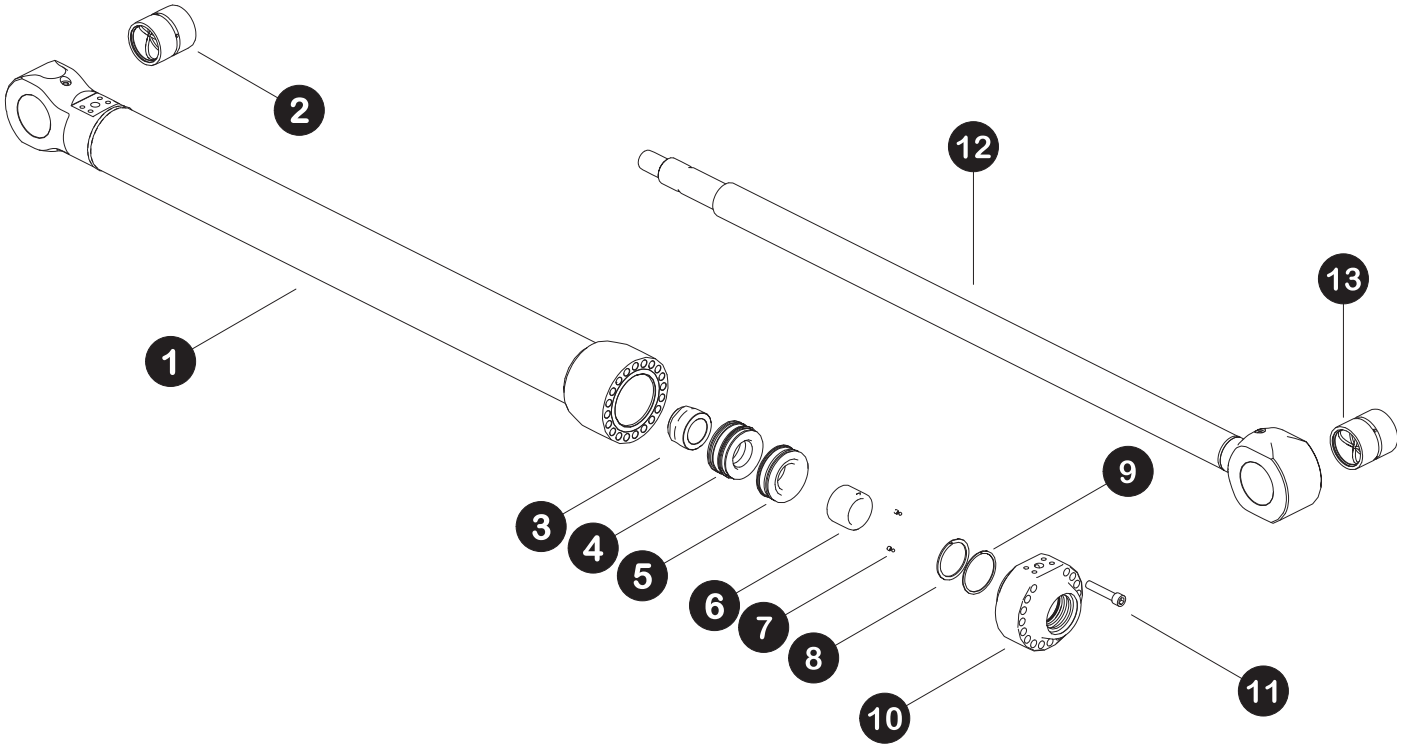

Parts 4229 07/17
12.5

HARVESTER BOOM CYLINDER ASSEMBLY

MAIN BOOM (HOIST) CYLINDER - 6”

REF	PART #	QTY	DESCRIPTION	SEE SECTION
-	55463	1	CYLINDER, MAIN - TL775 (4.5 Inch Dia) 54” Stroke	
1	TP450100	1	BARREL ASSEMBLY	
2	BB300400	2	BUSHING	
3	(NO REPLACEMENT #)	1	NUT, M58	
4	TP450110	1	PISTON, BACK	
5	TP450109	1	PISTON, FRONT	
6	TC110217	1	SLEEVE, Cushion	
7	NSS	2	BALL AND SETSCREW	
8	NSS	1	RING, spiral retaining	
9	NSS	1	RING, spiral retaining	
10	TP450108	1	GLAND, head	
11	(NO REPLACEMENT #)	17	BOLT, Metric	
12	TP450105	1	ROD ASSEMBLY	
13	BB300400	2	BUSHING	
-	SK45007500	1	KIT, seal repair - main boom cylinder 775	

HARVESTER BOOM CYLINDER ASSEMBLY

STICK BOOM (JIB) STANDARD CYLINDER (6.5" DIA)

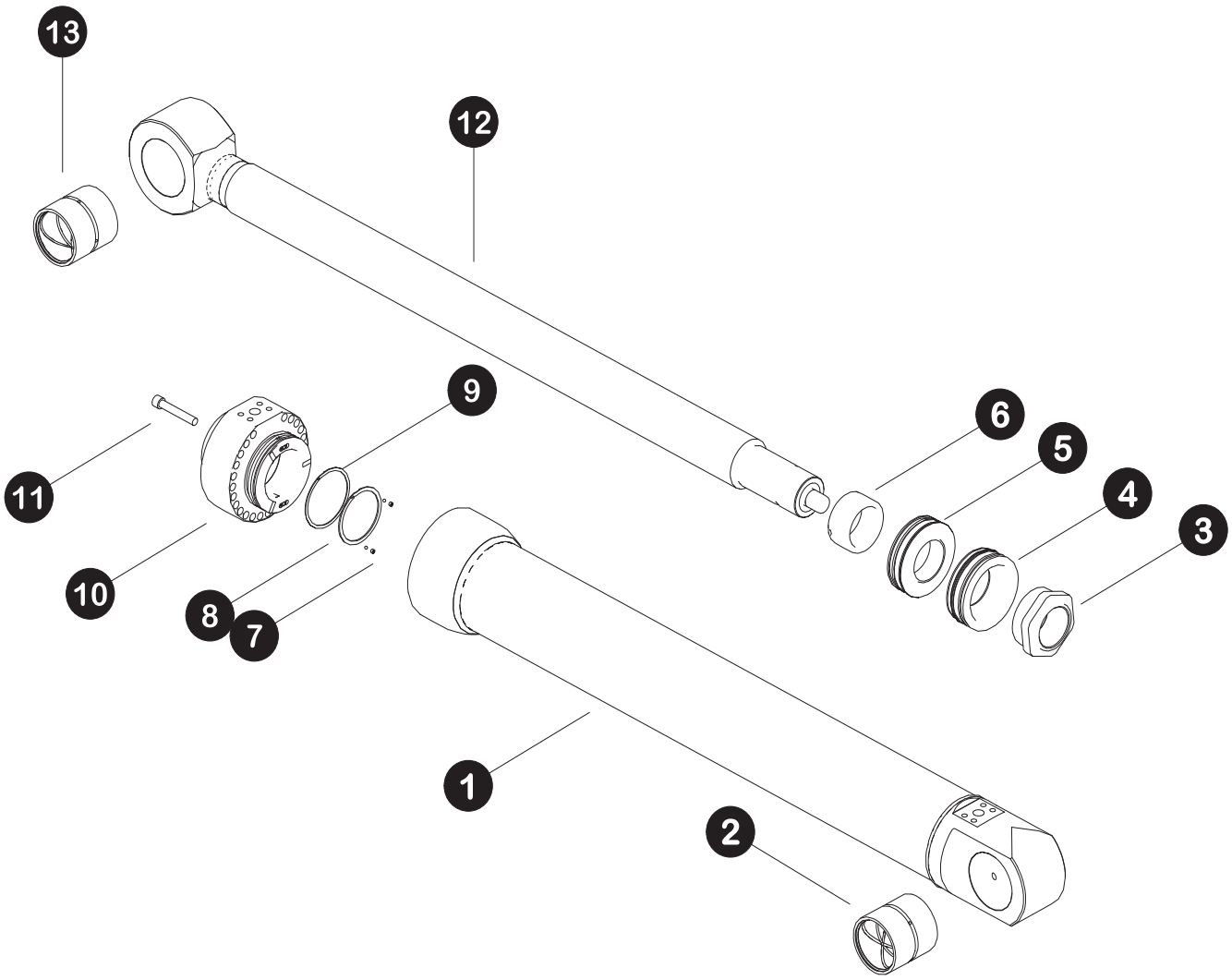

Parts 4230 07/17
12.5

HARVESTER BOOM CYLINDER ASSEMBLY

STICK BOOM (JIB) STANDARD CYLINDER (6.5" DIA)

REF	PART #	QTY	DESCRIPTION . . . . . SEE PAGE
-	55464	1	CYLINDER, STICK - TL775 (6.5 INCH DIA) 54" Stroke
1	TP650100	1	BARREL ASSEMBLY
2	BB425500	1	BUSHING
3	(NO REPLACEMENT #)	1	NUT M90
4	TP650110	1	PISTON, Back
5	TP650109	1	PISTON, Front
6	TP650117	1	SLEEVE, Cushon
7	(NO REPLACEMENT #)	1	Int spiral retaining ring
8	(NO REPLACEMENT #)	1	Int spiral retaining ring
9	TP650108	1	HEAD GLAND
10	(NO REPLACEMENT #)	25	BOLT - M16X100 (173 FT-LBS)
11	TP650105	1	ROD
12	BB425500	1	BUSHING
-	SK65011000	1	KIT, seal repair - Stick cylinder

(Please Verify Part Number Stamped on Base End of Cylinder Before Ordering Parts)

PAGE INTENTIONALLY LEFT BLANK

SECTION HH-1
HARVESTER HYDRAULICS ASSEMBLY AND INSTALLATION

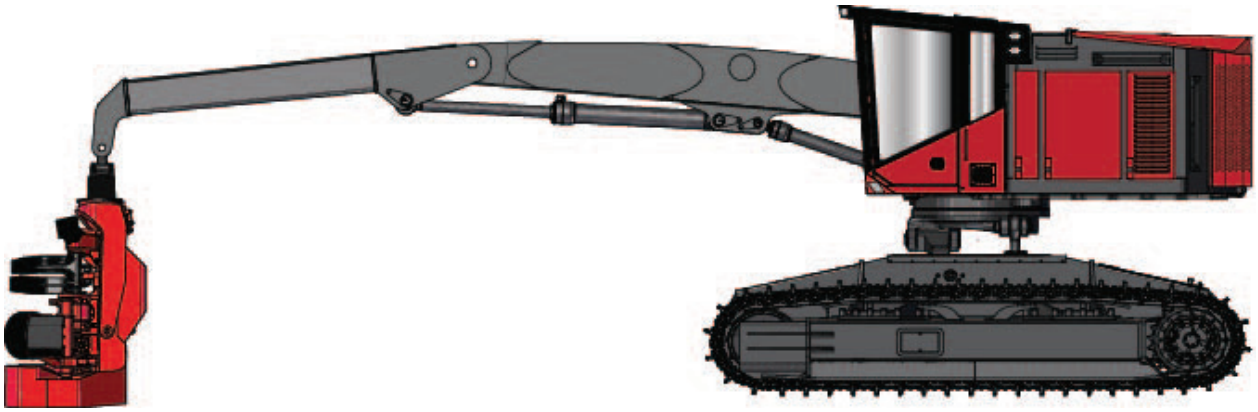

HARVESTER HYDRAULICS ASSEMBLY, AND INSTALLATION

IMPLEMENT PUMP HYDRAULICS PARTS AND ASSEMBLY

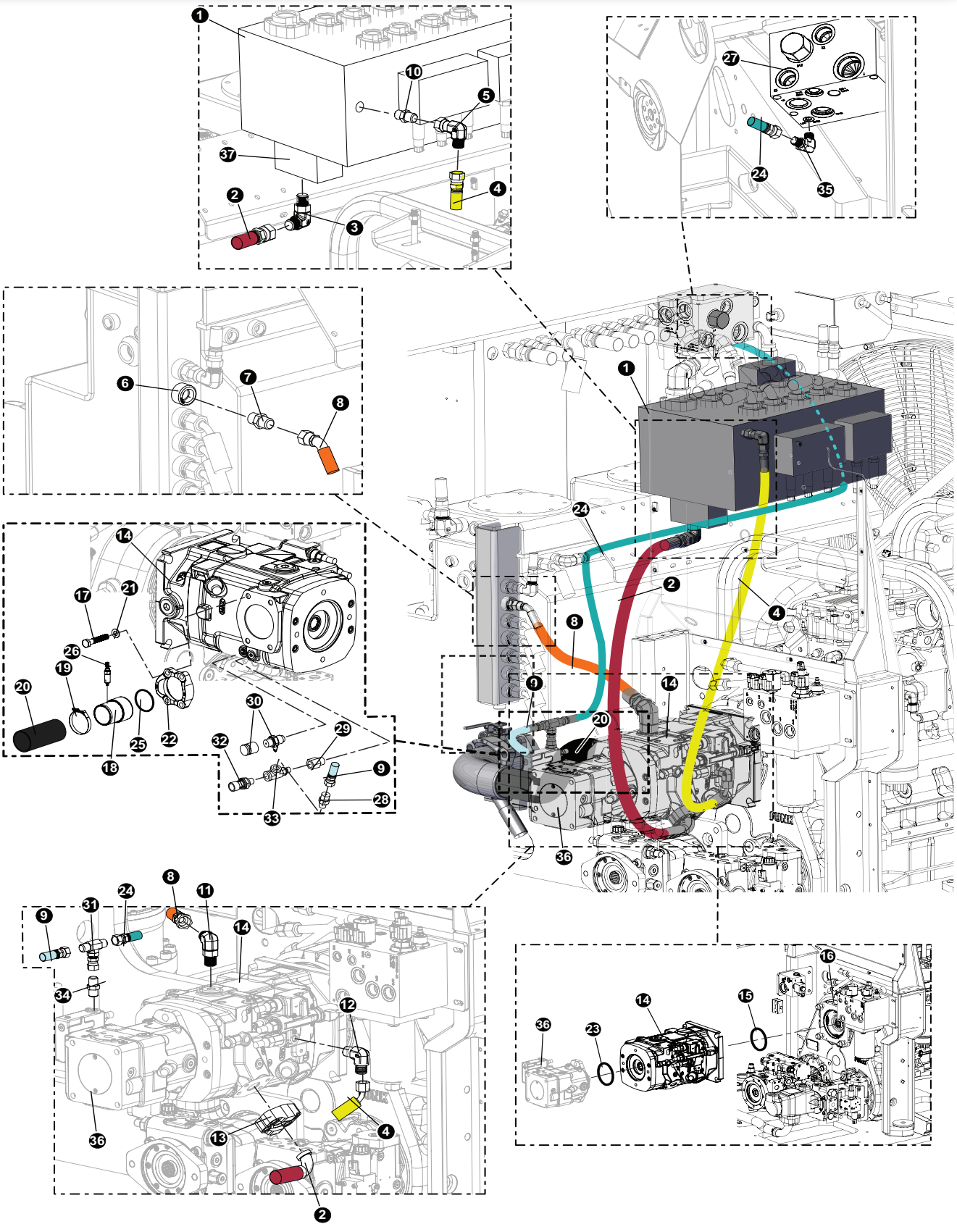

HARVESTER HYDRAULICS ASSEMBLY, AND INSTALLATION

IMPLEMENT PUMP HYDRAULICS PARTS AND ASSEMBLY

REF	PART #	QTY	DESCRIPTION	SEE SECTION
1	58154	1	VALVE, MAIN - REX DISC / LEVELING	
2	(See Description)	1	PRESSURE, IMPLEMENT **HOSE PART # 787TC72 20-20OS-20PH9-SW**	
3	17055	1	ELBOW, 90 - FF1868T-2020S	
4	(See Description)	1	Hose, Valve LS, **Hose Part # 787TC75 06-06OS-06O4-W**	
5	20035	1	ELBOW, 90 SWIVEL - 6 C6LO-S	
6		1	TANK, HYDRAULIC - 775	(SEE - UP-2)
7	18406	1	CONNECTOR, STR - FF1852T-1612S	
8	(See Description)	1	CASE IMPLEMENT HOSE ASSEMBLY, **HOSE PART #: 187TC46 16-16OS-16O4**	
9	(See Description)	1	Hose, Disc Saw Load Sense Jumper **Hose Part # 787TC14 04-04OS-04OS-W**	
10	18034	1	CONNECTOR, STR - FF1852T-0606S	
11	15228	2	ELBOW, 90 - FF1868T-1616S	
12	16296	1	ELBOW, 90 - FF1868T-0606S	
13	15114	1	KIT, SPLIT FLANGE - 1.25” (CODE 62)	
14		1	PUMP, IMPLEMENT - REX 175CC/40 W/HP CONT	(SEE - HH-15)
15	15442-2	1	O-RING, PUMP DRIVE PILOT	
16		1	TRANSMISSION, TRIPLE PUMP DRIVE	(SEE - EE-1)
17	(see description)	4	BOLT - 5/8” x 1 3/4” (Lawson PN #A697)	
18	60835	1	TUBE, SUCTION - 175CC TAILSWING ONLY	
19	15613	1	CLAMP, STRAP BAND - 3.5”	
20	(See Description)	1	HOSE ASSEMBLY, **HOSE PART #: 7216-300248 26-0-0**	
21	10771		WASHER, SAE FLAT - .625”	
22	58139	1	FLANGE, 13001H-5656K 175CC PUMP 57865	
23	58256	1	O-RING, THRU-DRIVE SERIES 40 (145/175)	
24	(See Description)	1	Hose, Disc Saw Load Sense **Hose Part # 787TC120 04-04OS-04OS-W**	
25	58992	1	O-RING, 175CC SUCTION ELBOW	
26	55615	1	FITTING, ADAPTOR - BLEED - SUCTION TUBE	
27		1	MANIFOLD, OIL COOLER CONTROL - D SERIES	(SEE - UP-2)
28	55214	1	CONNECTOR, STR - 848-TTO-04X04 (W/.031)	
29	16294	1	BUSHING, REDUCER - 6410-6-4	
30	57820	2	TAP, GAUGE PORT # 6 SAE - Oring Boss	
31	23541	1	TEE - 4 S6LO-S	
32	24532	1	TRANSDUCER, DISC SAW Pressure	
33	52186	1	TEE, RUN - MALE (4 A0G5J5-S)	
34	15124	1	CONNECTOR, STR - FF1852T-0406S	
35	16540	1	ELBOW, 90 - FF1868T-0404S	
36		1	PUMP, AUX - HIGH PRESSURE (60CC)	(SEE - HH-1-16)
37	17016	1	CONNECTOR, FLANGE PAD - 1.25 C62	

See referenced page for component or assembly breakdown.
Bulk material - order length required in feet or meters.
Kit or Assembly - includes all items indented underneath.

HARVESTER HYDRAULICS ASSEMBLY, AND INSTALLATION

HYDRAULICS PARTS AND ASSEMBLY

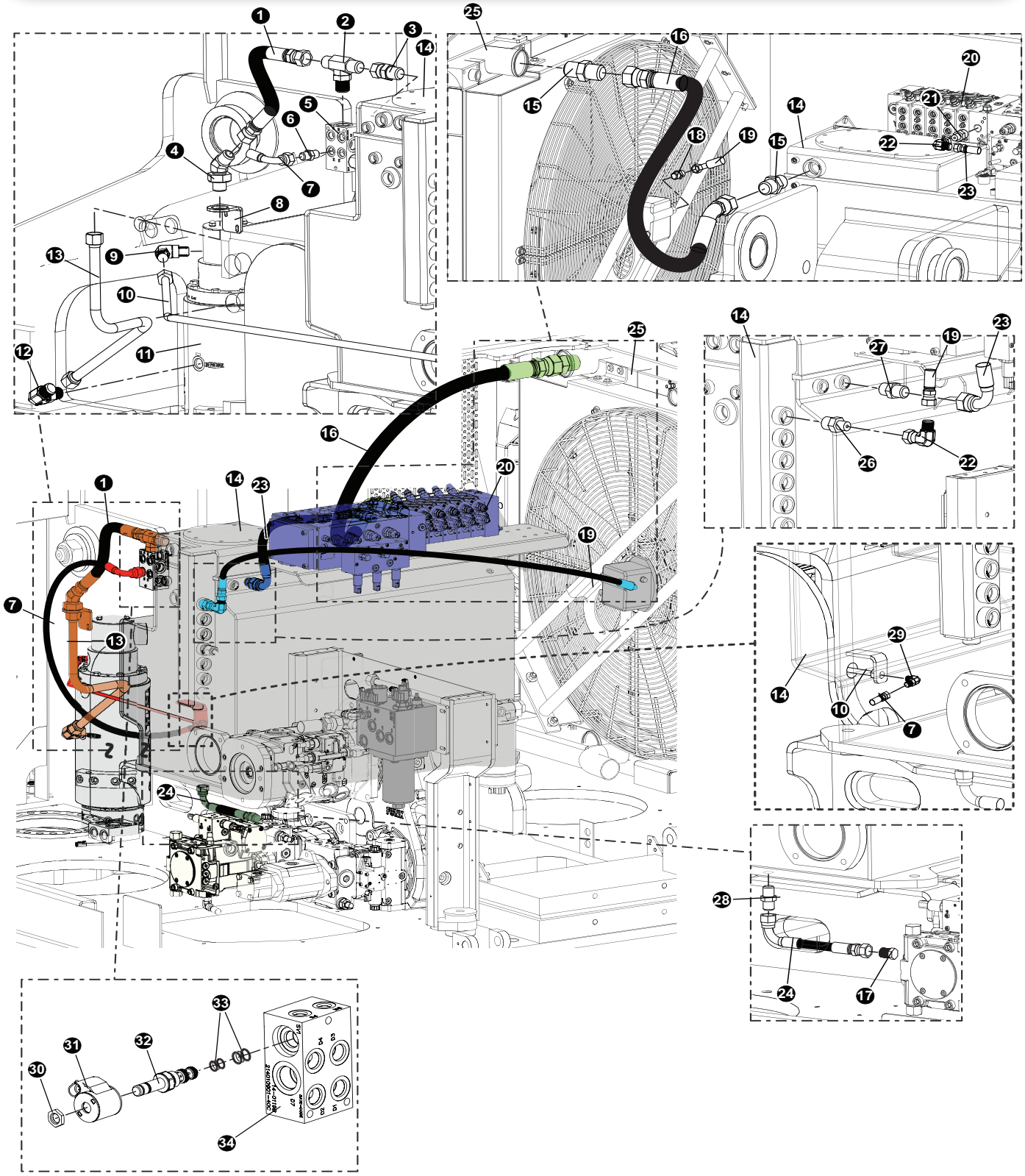

HARVESTER HYDRAULICS ASSEMBLY, AND INSTALLATION

HYDRAULICS PARTS AND ASSEMBLY

REF	PART #	QTY	DESCRIPTION	SEE SECTION
1	57941 (Kit #)	1	HOSE ASSEMBLY - P# 187TC22.5 16-16JS-16JS (Swing Brake Manifold to BH - Swing BR CD)	
2	55622	1	TEE, BRANCH - STRAIGHT THREAD #16	
3	11352	1	CONNECTOR, STR SWIVEL - 1404-16-16	
4	54806	1	45* Bulkhead Union Elbow -16 JIC	
5	55259 (Assm.)	1	Swing Brake Maninfold (See Below for Breakdown)	
6	53103	1	FITTING, 6-8 - ORB-JIC 830-B	
7	57941 (Kit #)	1	HOSE ASSEMBLY - P# 387TC41 06 06JS 06J9 (Swing BR Mfld to BH)	
8	47291	1	BRACKET, BH 16 JIC	
9	15479	1	ELBOW, 90 - 6801-6-4	
10	57277	1	TUBELINE, SD TO SEAL DRAIN BULKHEAD to RMV	
11		1	Rotary Maninfold	(SEE - UP-1)
12	11306	1	ELBOW, 90 12 C5OX-S to RMV2	
13	57278	1	TUBELINE, RM V2 TO V2 BULKHEAD	
14	(Click Here)	1	Hydraulic Tank	(SEE - UP-2)
15	22448	1	CONNECTOR, STR - 848-TTO-24X24	
16	57941 (Kit #)	1	HOSE ASSEMBLY - P# 187TC40 24 24OS-24O4 (Radiator to Hydraulic Tank)	
17	16033	1	PLUG - FF9767-12S	
18	18034	1	CONNECTOR, STR - FF1852T-0606S	
19	57941 (Kit #)	1	HOSE ASSEMBLY - P# 387TC73 06 06OS 06O9 (Hydraulic Tank to Radiator)	
20	58154	1	Main Control Valve	
21	(No Replacement Part)	1	(Contact Rexroth for Replacement Fitting)	
22	20035	1	ELBOW, 90 SWIVEL - 6 C6LO-S	
23	57941 (Kit #)	1	HOSE ASSEMBLY - P# 187TC28 08 08OS 08O9 (Main Control Valve to Hydraulic Tank)	
24	57941 (Kit #)	1	HOSE ASSEMBLY - P# 187TC10 12 12OS 12O9 (Hydraulic EOL)	
25		1	Radiator	(SEE - UP-3)
26	57620	1	FITTING, STR 6-12 F5OLO-S	
27	22901	1	CONNECTOR, STR - 6-8 F5OLO-S	
28	15201	1	CONNECTOR, STR - FF2031T-1212S	
29	55347	1	FITTING, ELBOW - BULKHEAD 6 WETX-WLN-S	
30	(See Desc.)	1	NUT, (P# 7004400)	
31	53992	1	COIL, (P# 4303724)	
32	53734	1	VALVE, SOLENOID - Parking Brake - (TM P# SV08-31-0-N-24ERZ)	
33	53735	1	KIT, seal - parking brake solenoid (SK10-3X-MM)	
34	55259	1	MANIFOLD, CASE DRAIN/SWING LOCK	

See referenced page for component or assembly breakdown.
Kit or Assembly - includes all items indented underneath.

HARVESTER HYDRAULICS ASSEMBLY, AND INSTALLATION

SWING MOTOR HYDRAULICS PARTS AND ASSEMBLY

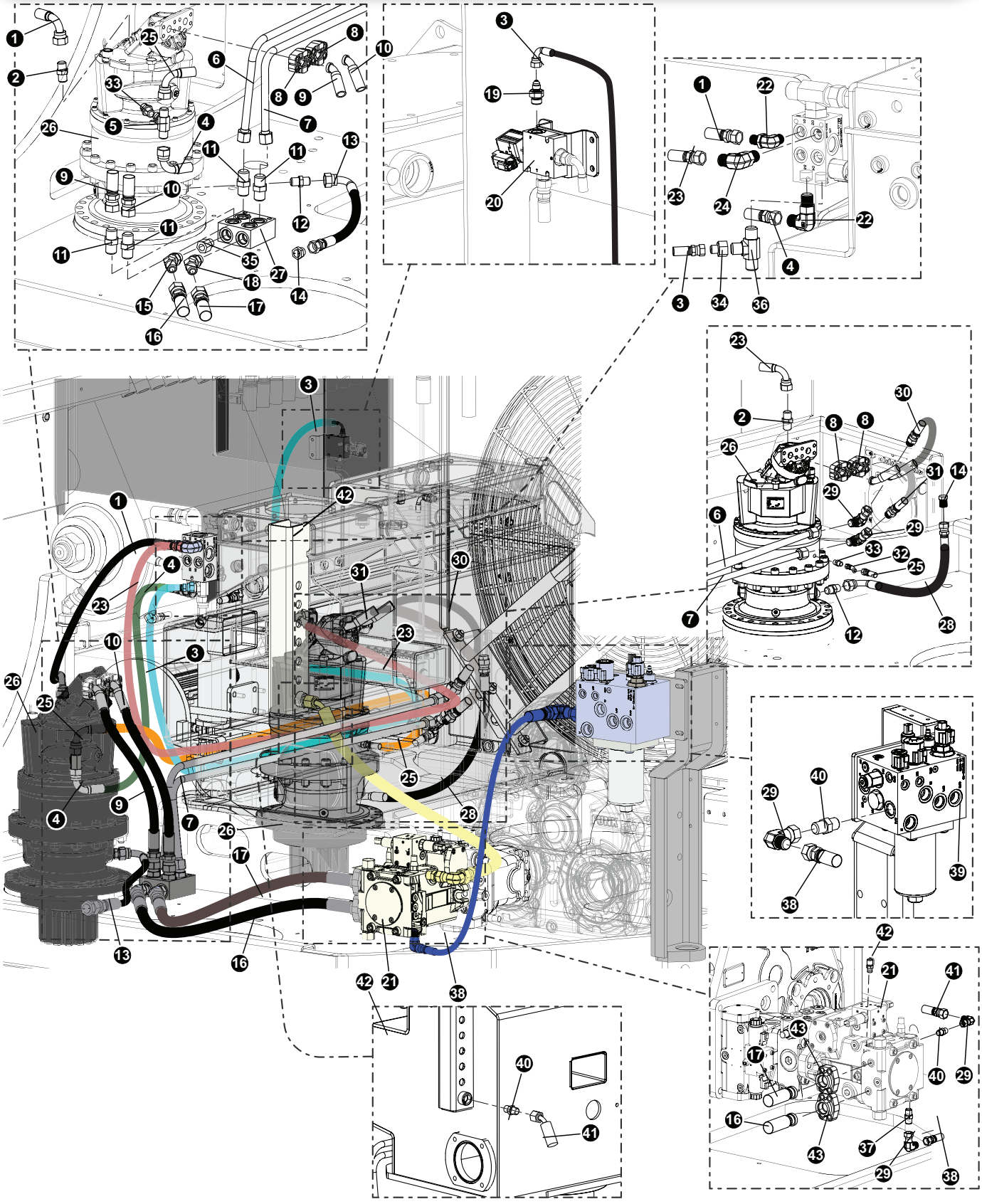

HARVESTER HYDRAULICS ASSEMBLY, AND INSTALLATION

SWING MOTOR HYDRAULICS PARTS AND ASSEMBLY

REF	PART #	QTY	DESCRIPTION	SEE SECTION
1	57941 (Kit #)	1	HOSE ASSEMBLY - P# 387TC 27 08-08JS-08O9 (Control Valve to Manifold)	
2	24182	1	CONNECTOR, STR - 6002-08-8BSPP	
3	58179 (KIT #)	1	HOSE ASSEMBLY - P# 387TC 106 04-04JS-04J9 (Charge to Greaser Valve)	
4	58179 (KIT #)	1	HOSE ASSEMBLY - (P# 387TC 29 04-04OS-04O9) (Swing Brake to Manifold)	
5	23541	1	TEE - 4 S6LO-S	
6	57300	1	TUBELINE, SWING MAN L TO R SWNG MTR BULKHEAD	
7	57316	1	TUBELINE, SWNG MAN R TO R SWNG MTR BULK	
8	16660	4	KIT, SPLIT FLANGE - .75 (CODE 62)	
9	58179 (KIT #)	1	HOSE ASSEMBLY - (P# 787TC 22.5 12-12JS-12PH4)	
10	58179 (KIT #)	1	HOSE ASSEMBLY - (P# 787TC 23.5 12-12JS-12PH4)	
11	11324	4	CONNECTOR, STR - 6400-12	
12	24182	2	CONNECTOR, STR - 6002-08-8BSPP	
13	58179 (KIT #)	1	HOSE ASSEMBLY - (P# 387TC 30 08-08OS-08O9)	
14	16032	2	PLUG - FF9767-08S	
15	16460	1	ELBOW, 45 - FF2068T-1616S	
16	58179 (KIT #)	1	HOSE ASSEMBLY - (P# 787TC 48 16-16OS-16PH)	
17	58179 (KIT #)	1	HOSE ASSEMBLY - (P# 787TC 48.5 16-16OS-16PH)	
18	21039	1	ELBOW, 45 - 16-12 V5OLO-S	
19	54809	1	CONNECTOR, STR - 4 JIC x -6 ORB	
20	57509	1	VALVE, AUTO GREASE SYSTEM	
21	57214	1	PUMP, SWING (TL765C) (90cc)	
22	16296	2	ELBOW, 90 - FF1868T-0606S	
23	58179 (KIT #)	1	HOSE ASSEMBLY - **(P# 387TC 84 08-08JS-08O9)**	
24	54810	1	ELBOW, 90* LONG -8 JIC	
25	58179 (KIT #)	1	HOSE ASSEMBLY - **(P# 387TC 55 04-04OS-04O9)**	
26	57213	1	MOTOR, SWING - L&S 32.5:1 / 56CC (TL765C)	
27	57284	1	MANIFOLD, SWING COMBINE FLOW	
28	58179 (KIT #)	1	HOSE ASSEMBLY - **(P# 387TC 36 08-08OS-08O9)**	
29	15477	4	ELBOW, 90 SWIVEL - 12 C6X-S	
30	58179 (KIT #)	1	HOSE ASSEMBLY - **(P# 787TC 31 12-12MJ-12PH4)**	
31	58179 (KIT #)	1	HOSE ASSEMBLY - **(P# 787TC 26 12-12MJ-12PH4)**	
32	53719	1	FITTING, SWIVEL NUT ELBOW - 45 DEG	
33	19469	2	CONNECTOR, STR METRIC - 4M12F82EDMLO-S	
34	16294	1	BUSHING, REDUCER - 6410-6-4	
35	19291	1	BUSHING, REDUCER - 6410-12-16	
36	55701	1	FITTING, TEE - 6 R5OX-S	
37	52078	1	CONNECTOR, STR - (10-12 F50L0-S)	
38	58179 (Kit#)	1	722TC42 12-12JS-12J4-SW	
39		1	Charge/Cooler Manifold	(SEE - EE-1)
40	15152	3	CONNECTOR, STR - FF1852T-1212S	
41	58179 (KIT #)	1	HOSE ASSEMBLY - **(P# 187TC48.5 12-12OS-12O4)**	
42	57819	1	TAP, GAUGE PORT - #4 SAE Oring Boss- ST	
43	15113	2	KIT, SPLIT FLANGE - 1” (CODE 62)	

See referenced page for component or assembly breakdown.

Kit or Assembly - includes all items indented underneath.

HARVESTER HYDRAULICS ASSEMBLY, AND INSTALLATION

CHARGE MANIFOLD PRESSURE, DRAINAGE, AND TANK CONNECTIONS

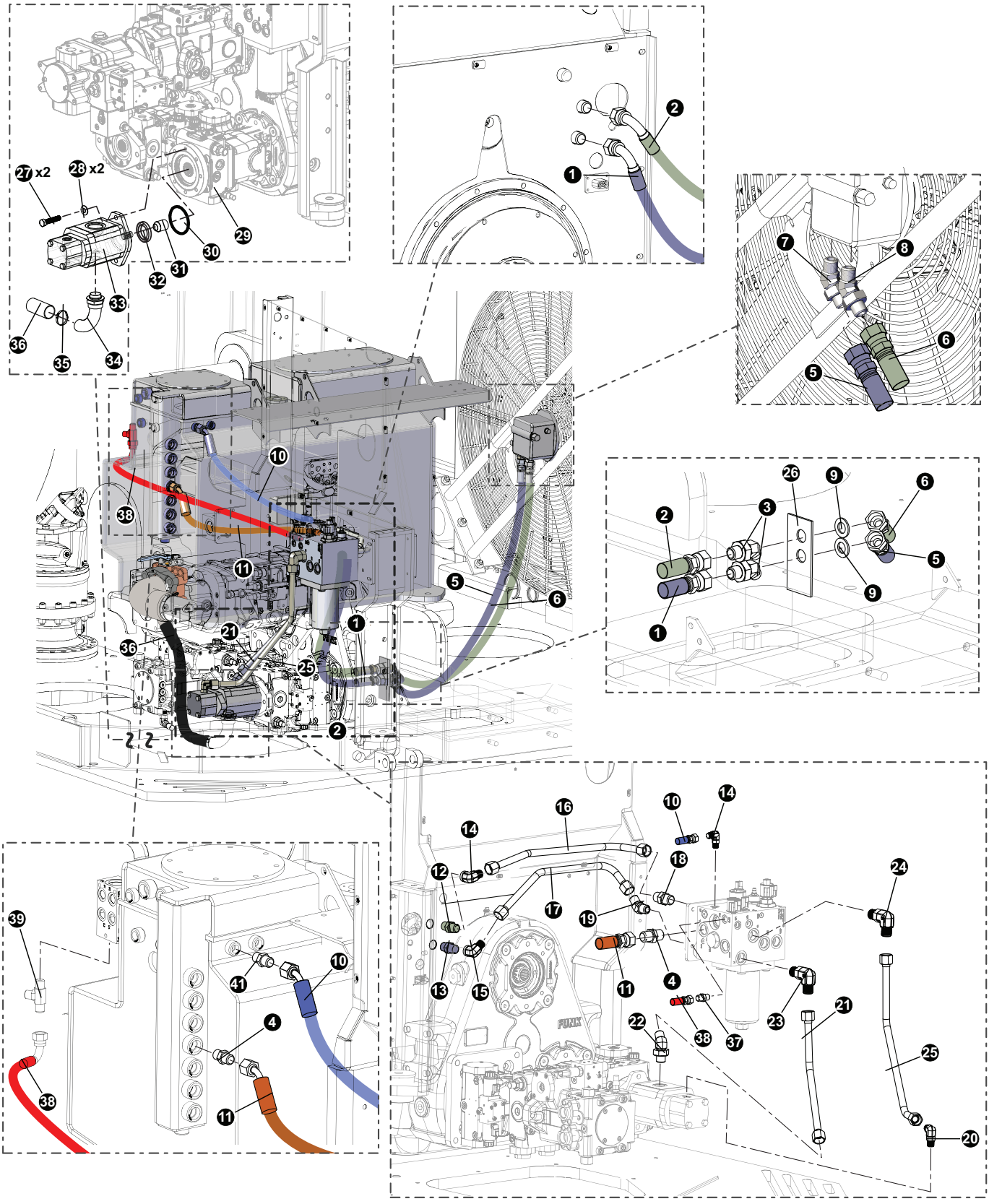

HARVESTER HYDRAULICS ASSEMBLY, AND INSTALLATION

CHARGE MANIFOLD PRESSURE, DRAINAGE, AND TANK CONNECTIONS

REF	PART #	QTY	DESCRIPTION	SEE SECTION
1	(See Description)	1	Radiator Return Hose (Suppier Hose Part #: **387TC 42.5 12 12OS -12J9**) - Engine BH to Fan Motor BH	
2	(See Description)	1	Radiator Supply Hose (Suppier Hose Part #: **387TC 42.5 12 12OS -12J9**) -Engine BH to Fan Motor BH	
3	19754	2	CONNECTOR, STR BULKHEAD - 12 WLO-WLNL-S	
4	15152	3	CONNECTOR, STR - FF1852T-1212S	
5	(See Description)	1	Radiator Return Hose (Suppier Hose Part #: **187TC 45 12-12OS-16OS**) -Fan Motor to Fan Motor BH	
6	(See Description)	1	Radiator Supply Hose (Suppier Hose Part #: **387TC 43 12-12OS-12OS**) -Fan Motor to Fan Motor BH	
7	19127	1	ELBOW, 45 - FF2068T-1212S	
8	16460	1	ELBOW, 45 - FF2068T-1616S	
9	57126	2	Washer	
10	(See Description)	1	Radiator Return Hose (Suppier Hose Part #: **387TC 63 06-06OS-0604-W**) - Hydraulic Tank to Charge Manifold)	
11	(See Description)	1	Charge nlock case drain (Suppier Hose Part #: **187TC 52 12-12OS -1204**) - Hydraulic Tank to Charge Manifold)	
12	11324	1	CONNECTOR, STR - 6400-12	
13	17009	1	CONNECTOR, STR BULKHEAD - 2700-12	
14	54704	1	ELBOW, 90 BULK 12 WETX-WLN-S (12 JIC MM)	
15	15477	1	ELBOW, 90 SWIVEL - 12 C6X-S	
16	58032	1	TUBELINE, FR TO BULKHEAD FAN RETURN	
17	57929	1	TUBELINE, F0 TO BULKHEAD FAN PRESSURE	
18	11324	1	CONNECTOR, STR - 6400-12	
19	15474	1	ELBOW, 45 - 6802-8	
20	53032	1	ELBOW, 90 - 12 JIC X 10 ORB	
21	57928	1	TUBELINE, F1 TO FRONT GEAR PUMP FAN PRESSURE	
22	15472	1	ELBOW, 45 SWIVEL - 12 V6X-S	
23	11306	1	ELBOW, 90 12 C5OX-S	
24	11306	1	ELBOW, 90 12 C5OX-S	
25	57927	1	TUBELINE, C1 TO REAR GEAR PUMP	
26	62152	1	WELDMENT, BH-TUBELINES - 765/775	
27	18415	2	BOLT - 12MM-1.75P X 30MM	
28	18735	2	WASHER, FLAT - 12MM	
29	(Click Here)	1	TRACK DRIVE PUMP	(SEE - DH-2)
30	21624	1	O-RING, CHARGE PUMP PILOT (AA4VG90)	
31	R909650371	1	COUPLING, Charge Pump	
33	57609	1	PUMP, CHARGE - DUAL FLOW	
32	58177		SHAFT SEAL 25.4-38.1-6.35 NBR	
	1517010194		SEAL KIT	
	1517010152		SEAL KIT	
34	57663	1	FITTING, ELBOW - HOSE END 90°	
35	55614	2	CLAMP, CONSTANT TORQUE - 1.75”	
36	58179	1	KIT, HOSE-D SERIES UPPER (Suppier Hose Part #: **811 HT42 24-0-0**)	
37	18034	1	CONNECTOR, STR - FF1852T-0606S	
38	(See Description)	1	Charge Pressure Gauge (Suppier Hose Part #: **387TC75 06-06OS-06J9-W**)	
39	55701	1	FITTING, TEE - 6 R5OX-S	

HARVESTER HYDRAULICS ASSEMBLY, AND INSTALLATION

CAB LEVELING HYDRAULICS PARTS AND ASSEMBLY

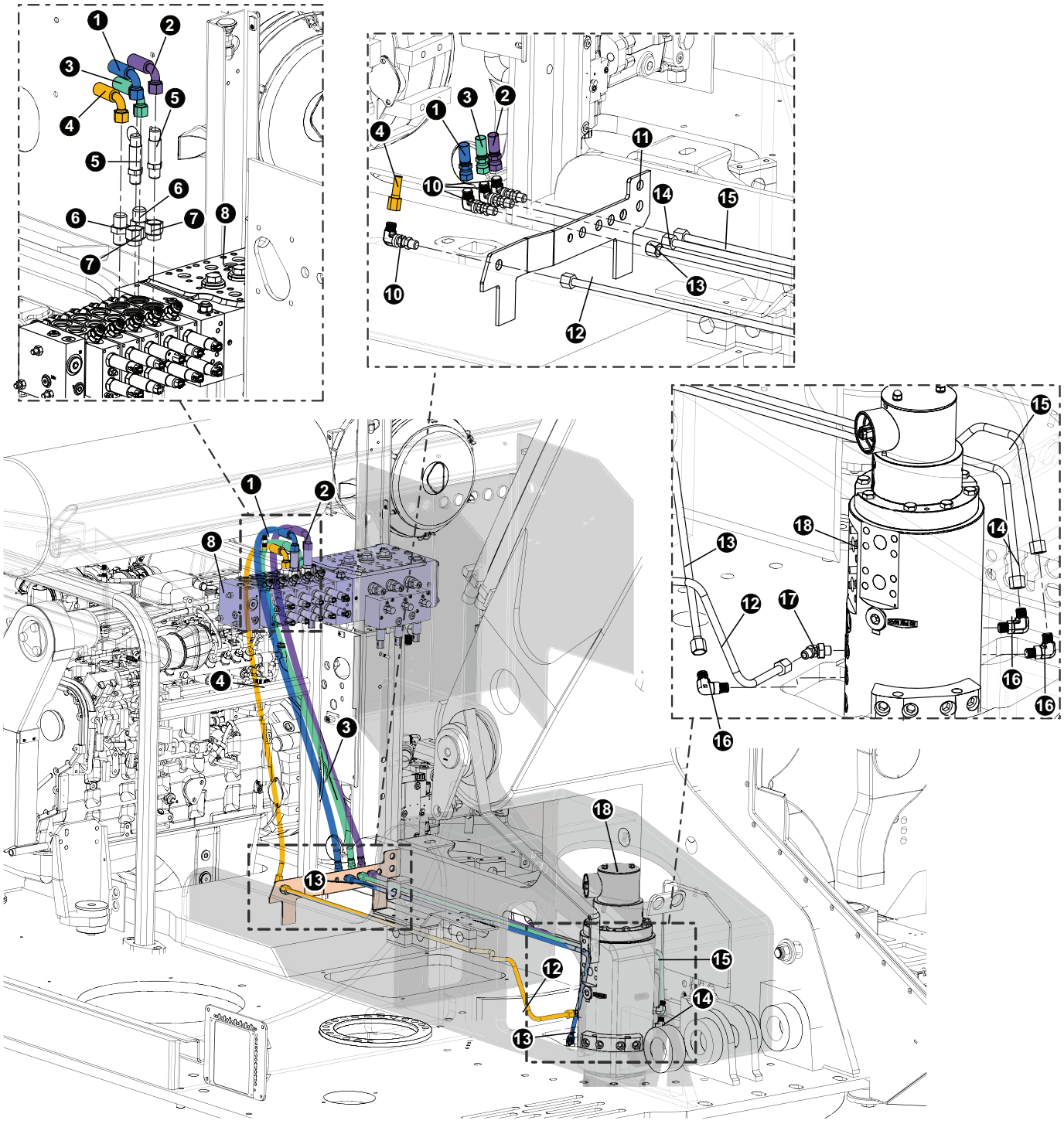

HARVESTER HYDRAULICS ASSEMBLY, AND INSTALLATION

CAB LEVELING HYDRAULICS PARTS AND ASSEMBLY

REF	PART #	QTY	DESCRIPTION	SEE SECTION
1	58239	2	HOSE ASSEMBLY - 722TC 58 08-08JS 08J9 (Cab Level (LVL) section “A” to Bulkhead)	
2	58239	2	HOSE ASSEMBLY - 722TC 59 08-08JS 08J9 (Cab Level (LVL) section “B” to Bulkhead)	
3	58239	1	HOSE ASSEMBLY - 722TC 54.5 08-08JS 08J9 (Bulkhead to Rotary Manifold Port 2)	
4	58239	1	HOSE ASSEMBLY - 722TC 51 08-08JS 08J9 (Bulkhead to Rotary Manifold Port 4)	
5	55513	2	FITTING, STRAIGHT CONNECTOR #8	
6	55380	2	FITTING, STRAIGHT - 8-12 F5OX-S	
7	20067	2	BUSHING, REDUCER - 6410-12-8	
8	58154	1	MAIN CONTROL VALVE	
10	55382	4	FITTING, BULKHEAD - 8 WETX-WLN-S	
11		1	UPPER TURNTABLE	(SEE - UP-1)
12	57269	1	TUBELINE, RM #5 TO LEVEL BULKHEAD	
13	57270	1	TUBELINE, RM #6 TO LEVEL BULKHEAD	
14	57271	1	TUBELINE, RM #4 TO LEVEL BULKHEAD	
15	57272	1	TUBELINE, RM #2 TO LEVEL BULKHEAD	
16	16360	1	ELBOW, 90 - FF1868T-0808S	
17	19126	1	ELBOW, 45 - FF2068T-0808S	
18		1	ROTARY MANIFOLD	(SEE - UP-1)

📖See referenced page for component or assembly breakdown.
✂Bulk material - order length required in feet or meters.
❑Kit or Assembly - includes all items indented underneath.

HARVESTER HYDRAULICS ASSEMBLY, AND INSTALLATION

TL-775 SUPPY, RETURN, AND FLUSHING CIRCUITS

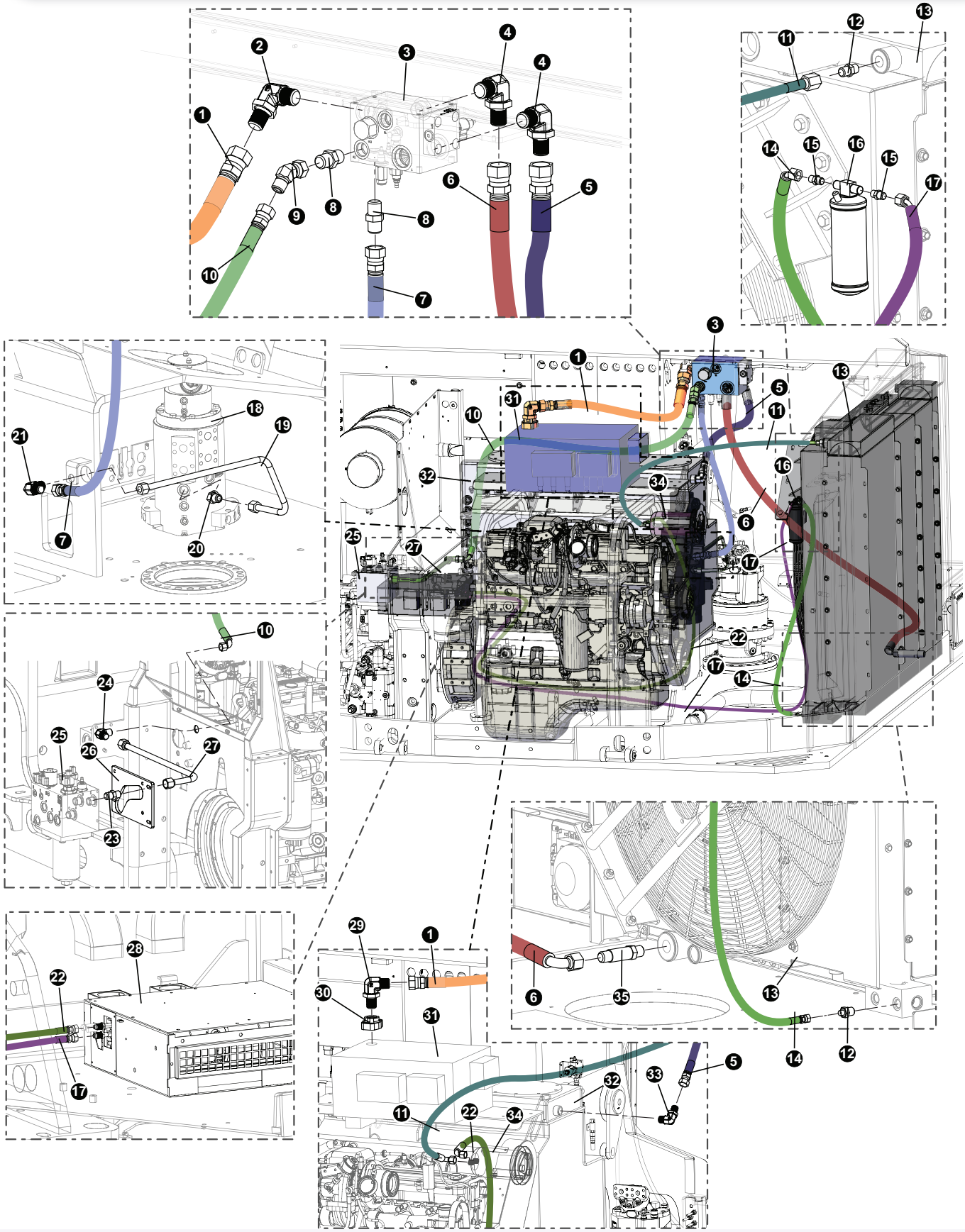

HARVESTER HYDRAULICS ASSEMBLY, AND INSTALLATION

TL-775 SUPPY, RETURN, AND FLUSHING CIRCUITS

REF	PART #	QTY	DESCRIPTION	SEE SECTION
1	(See Description)	1	Main Contol Valve Flush Hose (Supplier Hose Part #: 187TC 40 20-20OS-20OS)	
2	50470	1	ELBOW, 90 - 849-TT0-16X20	
3		1	MANIFOLD, OIL COOLER CONTROL - D SERIES	(SEE - UP-2)
4	(See Description)	2	90 Fitting (Supplier Part #: 24-C50LOS-2404)	
5	(See Description)	1	Hydraulic Tank Flush Hose (Suppier Hose Part #: 187TC30 24-24OS-24O9)	
6	(See Description)	1	Radiator Flush Hose (Suppier Hose Part #: 187TC83 24-24O9-24OS-SW)	
7	(See Description)	1	Rotary Manifold Flush Hose (Suppier Hose Part #: 387TC47 12-JS-12OS-SW)	
8	15226	2	CONNECTOR, STR - FF1852T-1216S	
10	(See Description)	1	Engine Bulkhead/Charge Mfld Flush Hose (Suppier Hose Part #: 387TC71 12-OS-12J9-SW)	
11	(See Description)	1	(Find # on Machine (Badger Truck Kit #BK1163)	
12	(See Description)	2	Straight Fitting (Badger Truck #BK1189)	
13		1	RADIATOR / OIL COOLER - STAGE V TAIL SWING	(SEE - UP-3)
14	(See Description)	1	(Find # on Machine (Badger Truck Kit #BK1163)	
15	(See Description)	4	Straight Fitting (Badger Truck #21.31406)	
16	50937	1	DRIER, A/C - (EAGLE 24V SYSTEM)	
17	(See Description)	1	(Find # on Machine (Badger Truck Kit #BK1163)	
18		1	ROTARY MANIFOLD	(SEE - UP-1)
19	57279	1	TUBELINE, RM #7 TO FLUSH BULKHEAD	
20	15474	1	ELBOW, 45 - 6802-12	
21	54704	1	ELBOW, 90 BULK 12 WETX-WLN-S (12 JIC MM)	
22	(See Description)	1	(Find # on Machine (Badger Truck Kit #BK1163)	
23	11324	1	CONNECTOR, STR - 6400-12	
24	54704	1	ELBOW, 90 BULK 12 WETX-WLN-S (12 JIC MM)	
25		1	CHARGE MANIFOLD	(SEE - EE-1)
26	60444	1	MOUNT, MANIFOLD	
27	57931	1	TUBELINE, T2 TO BULKHEAD	
28		1	AC HEATER	(SEE - OC-4)
29	17055	1	ELBOW, 90 - FF1868T-2020S	
30	17909	1	CONNECTOR, FLANGE PAD-W46K-20-20 CODE 61	
31	58154	1	MAIN CONTROL VALVE	
32		1	HYDRAULIC TANK	(SEE - UP-2)
33	22448	1	CONNECTOR, STR - 848-TTO-24X24	
34		1	AC CONDENSER	(SEE - OC-4)
35	57498	1	VALVE, CHECK - ORIFICE GREASE SYSTEM	

HARVESTER HYDRAULICS ASSEMBLY, AND INSTALLATION

TL-775 SUPPY, RETURN, AND FLUSHING CIRCUITS

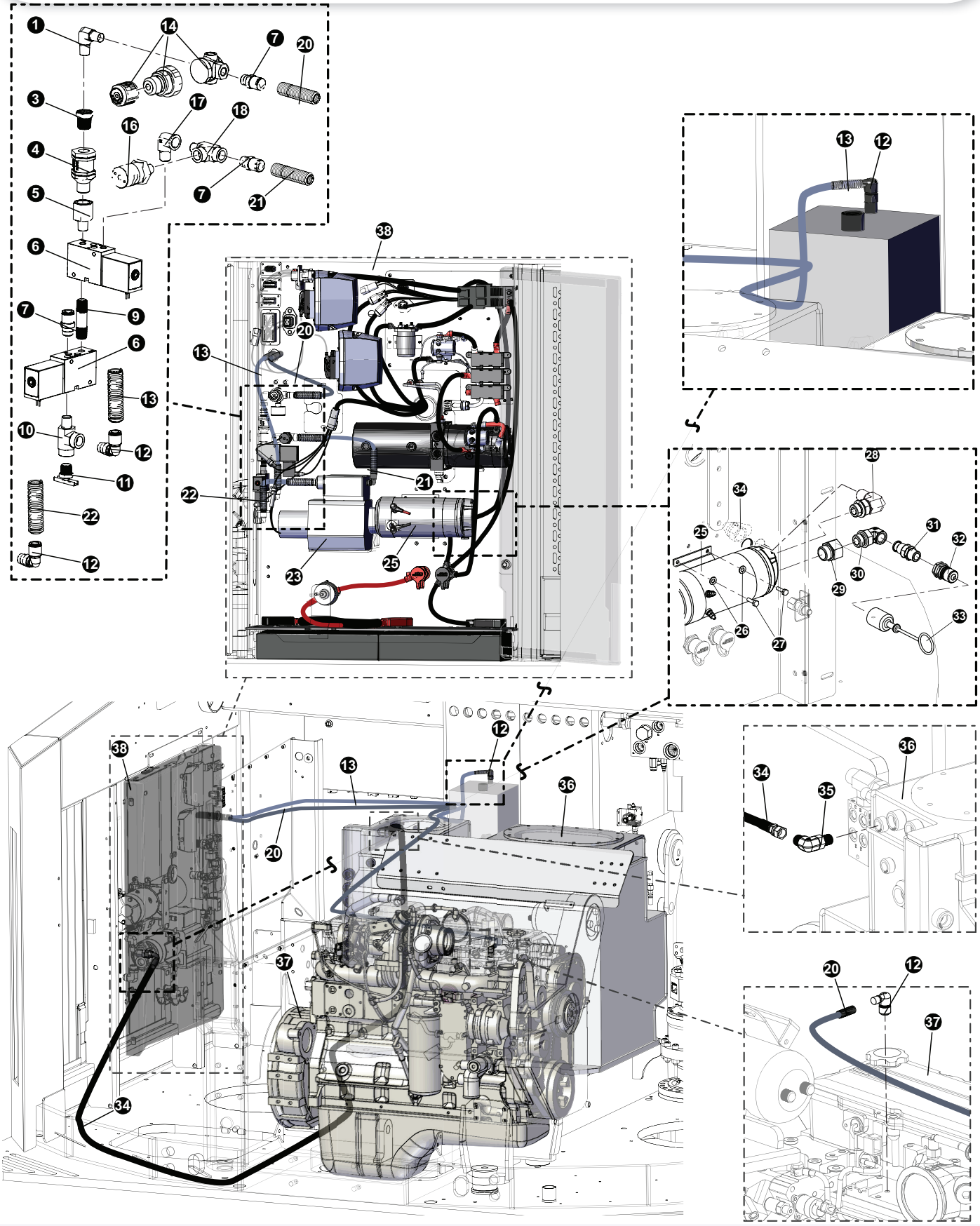

HARVESTER HYDRAULICS ASSEMBLY, AND INSTALLATION

TL-775 SUPPY, RETURN, AND FLUSHING CIRCUITS

REF	PART #	QTY	DESCRIPTION	SEE SECTION
1	52741	1	ELBOW, MALE PIPE - 1/4 CR-S	
3	11318	1	BUSHING, REDUCER - 5406-6-4	
4	15652	1	VALVE, CHECK - HYDRAULIC/FUEL TANK	
5	52145	1	ADAPTER, EXPANDER - 3/8 X 1/4 FG-S	
6	51616	2	VALVE, VACUUM PUMP - HYD TANK	
9	16314	1	NIPPLE, PIPE - .25” X 2”	
10	10393	1	TEE - 5602-4	
11	15650	1	VALVE, TANK VENT - DC602-6	
12	51739	4	CONNECTOR, ELBOW -PUSH ON (VACUUM)	
13	51738	lin. ft	HOSE, 3/8” PUSH ON - VACUUM PUMP	
14	15649	1	REGULATOR, TURBO BOOST	
16	51737	1	SWITCH, PRESSURE - VACUUM PUMP (HYD TANK)	
17	21147	1	ELBOW, 90 STREET .25” NPT - BRASS	
18	10393	1	TEE - 5602-4	
19	52506	2	CONNECTOR, STR - PUSH HOSE 3/8 (VACUUM)	
20	51738	lin. ft	HOSE, 3/8” PUSH ON - VACUUM PUMP	
21	51738	lin. ft	HOSE, 3/8” PUSH ON - VACUUM PUMP	
22	51738	lin. ft	HOSE, 3/8” PUSH ON - VACUUM PUMP	
23		1	PUMP, VACUUM - HYD TANK	(SEE - UP-2)
25	55691	1	FILL PUMP ASSEMBLY	
26	10801	4	WASHER, FLAT - .3125”	
27	15605	4	BOLT - .3125” X .75”	
28	55712	1	FITTING, ELBOW - MALE 8-8C4OMXS	
29	55711	1	FITTING, 3/4 - 12F40HG55	
30	22383	1	ELBOW, 90 - 12 AOEG5-S	
31	54998	1	FITTING, FILL PUMP	
32	55620	1	NIPPLE, 60 SERIES - H6-63-T12	
33	55617	1	CAP, QUICK CONNECT - RUBBER (RED)	
34	(See Description)	1	Fill Pump Supply Hose (Supplier Hose Part #: 387TC 227 08-08JS-08J9L)	
35	15481	1	ELBOW, 90 - 6801-8	
36		1	HYDRAULIC TANK ASSEMBLY	(SEE - UP-1)
38	47867	1	WELDMENT, ELEC PANEL, D-MODEL	

See reference page for component or assembly breakdown.
Kit or Assembly - includes all items indented underneath.
#Sold in bulk per foot - Please specify length when ordering.

HARVESTER HYDRAULICS ASSEMBLY, AND INSTALLATION

TL-775 IMPLEMENT PUMP - 175CC / 40 W / HP CONT

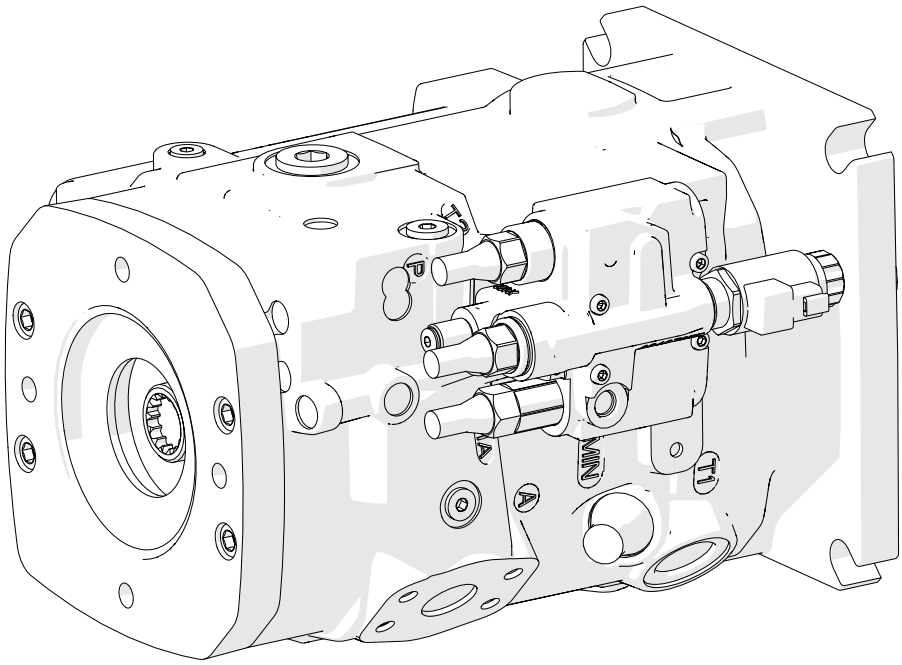

REF	PART #	QTY	DESCRIPTION	SEE SECTION
	57865	1	PUMP, IMPLEMENT - REX 175CC/40 W/HP CONT	

HARVESTER HYDRAULICS ASSEMBLY, AND INSTALLATION

TL-775 AUXILARY DISC SAW PUMP, HIGH PRESSURE (60CC)

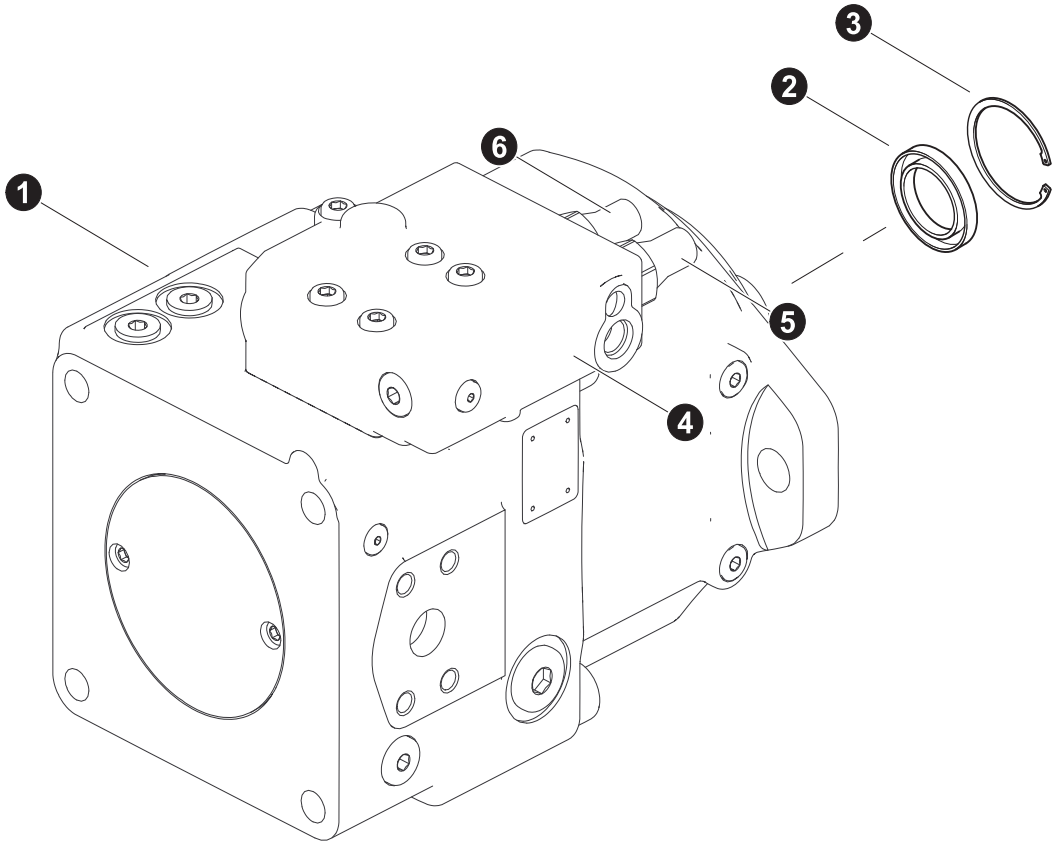

REF	PART #	QTY	DESCRIPTION	SEE SECTION
1	54523	1	□ PUMP, DISC SAW - HIGH PRESSURE (60CC)	
2	R909083416	1	RETAINING RING	
3	57451	1	SHAFT SEAL RING	
4	R909608948	1	□ CONTROLLER	
5	R909608948	1	HIGH PRESSURE	
6	R909609420	1	STANDBY	
-		1	KIT, seal repair - disc saw pump	

□ Kit or Assembly - includes all items indented underneath.

PAGE INTENTIONALLY LEFT BLANK

SECTION HH-2
HARVESTER BOOM HYDRAULICS

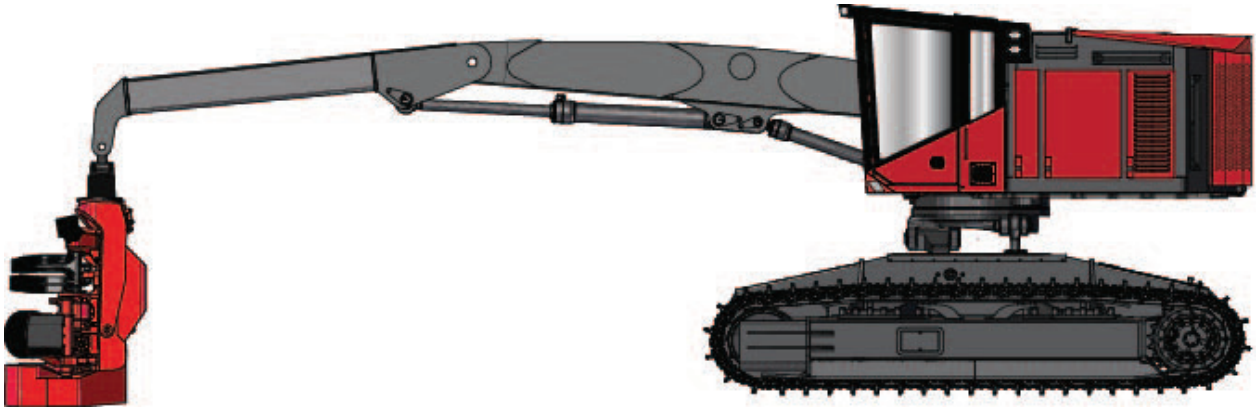

HARVESTER HYDRAULICS ASSEMBLY AND INSTALLATION

MAIN BOOM CYLINDER HYDRAULICS PARTS AND ASSEMBLY

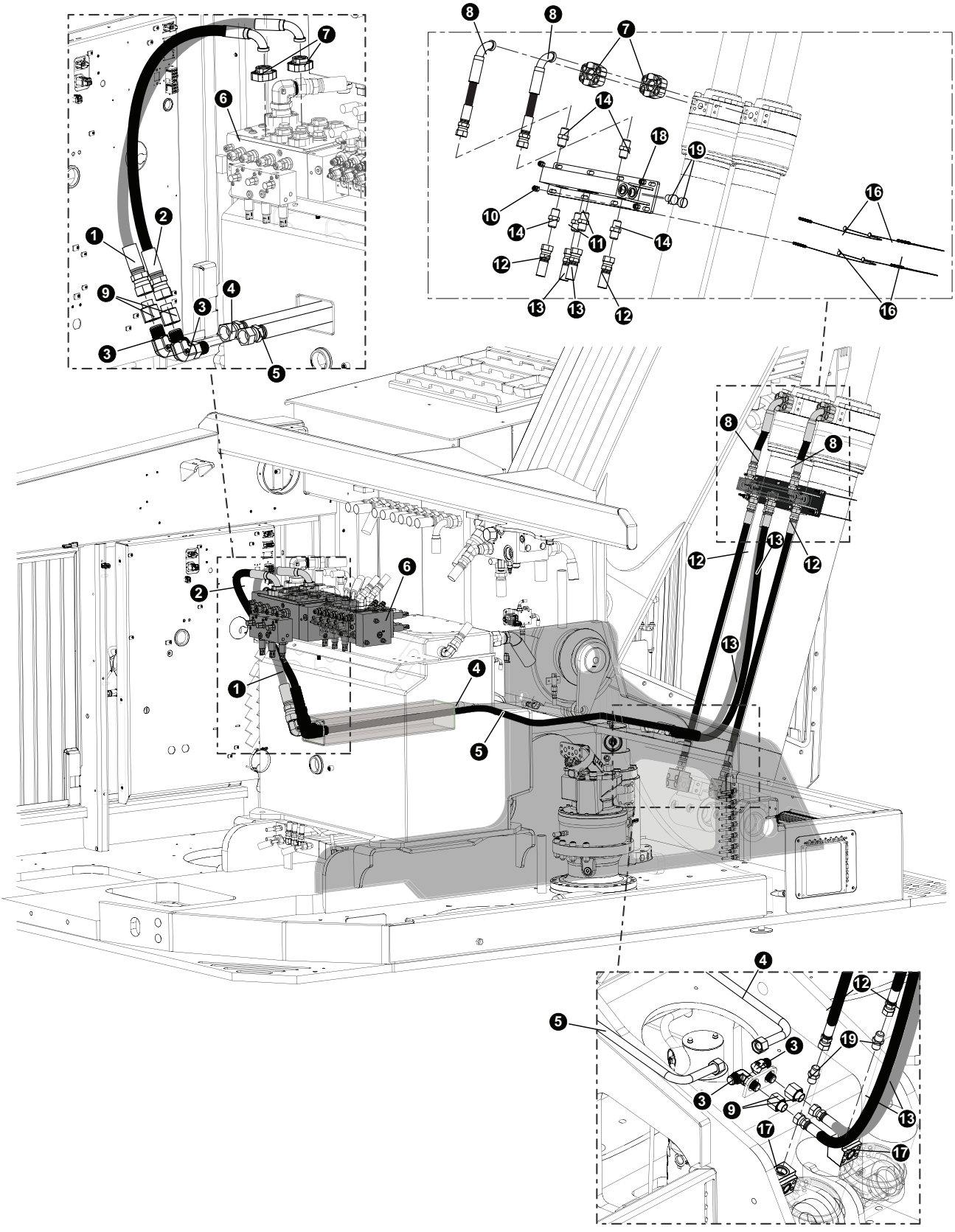

HARVESTER HYDRAULICS ASSEMBLY AND INSTALLATION

MAIN BOOM CYLINDER HYDRAULICS PARTS AND ASSEMBLY

REF	PART #	QTY	DESCRIPTION	SEE SECTION
1	58239 (Kit #)	1	HOSE ASSEMBLY - **P# 722TC38.5 16-16OS-16PH9** (Control Valve to Boom Cylinder Tube)	
2	58239 (Kit #)	1	HOSE ASSEMBLY - **P# 722TC37 16-16OS-16PH9** (Control Valve to Boom Cylinder Tube)	
3	52429	4	ELBOW, 90 BULKHEAD - #20 WELO-WLNL-S	
4	57260	1	TUBELINE, MC BULKHEAD TO MC BULKHEAD	
5	57282	1	TUBELINE, MC BULKHEAD TO MC BULKHEAD	
6	58154	1	VALVE, MAIN - REX HARVESTER	
7	15113	4	KIT, SPLIT FLANGE - 1” (CODE 62)	
8	58239 (Kit #)	2	HOSE ASSEMBLY - P#722TC15 12-12OS-16PH9 (Main Cylinder to Cylinder Manifold)	
9	20455	4	CONNECTOR, REDUCER - ORS FF2281T-1620S	
10	55262	8	NUT, LOCK - “C” SERIES HYD TANK COVER	
11	15225	2	CONNECTOR, STR - FF1852T-1616S	
12	58179 (Kit #)	2	HOSE ASSEMBLY - **P#722TC41 12-12OS-12OS-SW** (Main Cylinder to Cylinder Manifold)	
13	58179 (Kit #)	2	HOSE ASSEMBLY - **P#722TC54 16-16OS-16OS** (Main Cylinder to Cylinder Manifold)	
14	15152	4	CONNECTOR, STR - FF1852T-1212S	
16	57748	4	CABLE, CYLINDER - 19” - 765	
17	57601	2	FLANGE, BLOCK ELBOW W184-16-16U CODE 62	
18	48391	1	MANIFOLD, MAIN BOOM - TL765	
19	15584	2	PLUG - 6408-HHP-12	

📖See referenced page for component or assembly breakdown.
✂Bulk material - order length required in feet or meters.
❑Kit or Assembly - includes all items indented underneath.

HARVESTER HYDRAULICS ASSEMBLY, AND INSTALLATION

HYDRAULIC LINES - VALVE TO BOOM

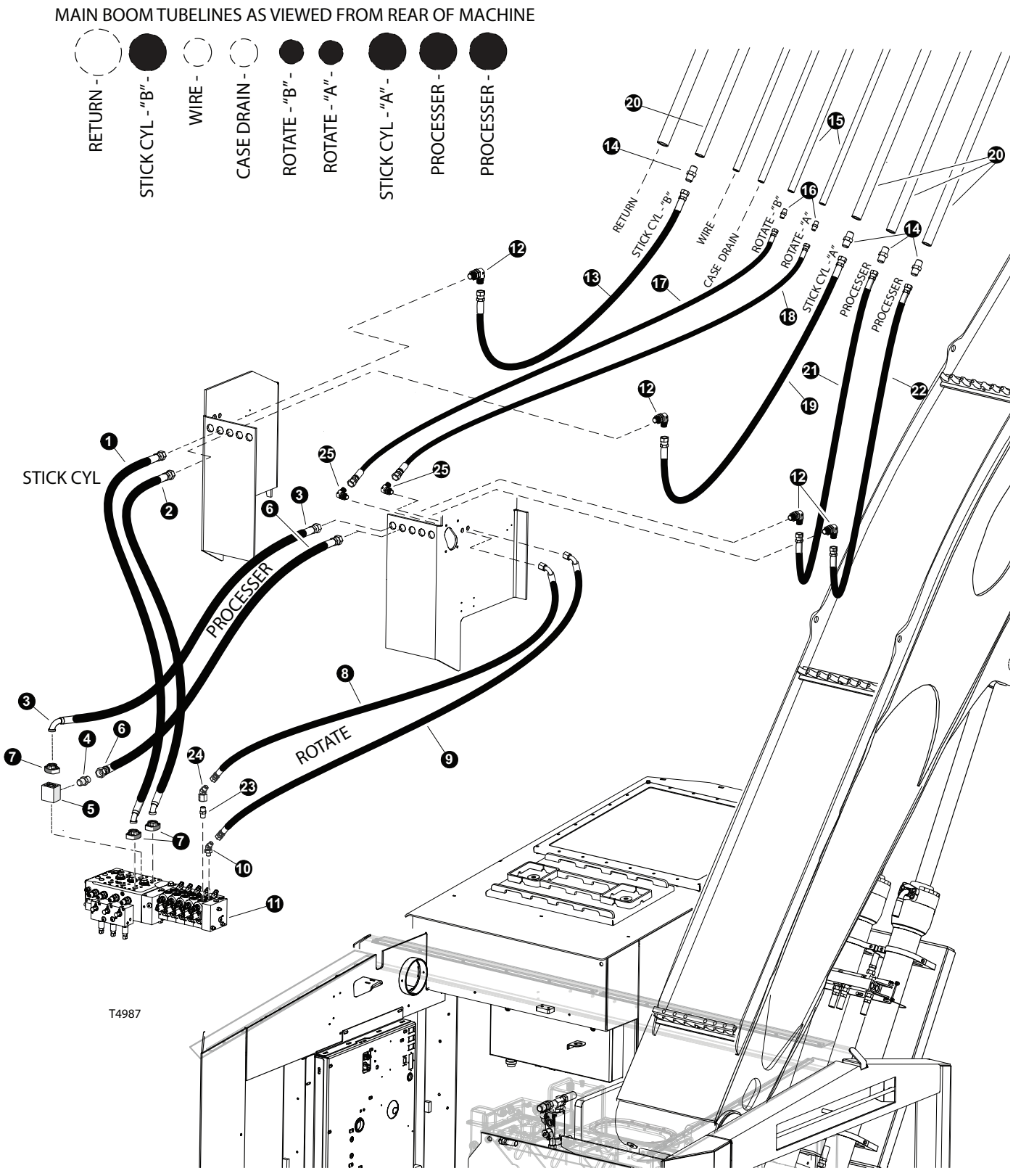

HARVESTER HYDRAULICS ASSEMBLY, AND INSTALLATION

HYDRAULIC LINES - VALVE TO BOOM

REF	PART #	QTY	DESCRIPTION	SEE SECTION
1	KIT - 57548	1	HOSE ASSEMBLY - 722TC31.5 16-16OS-16PH4 (STICK “B” VALVE TO BULKHEAD)	
2	KIT - 57548	1	HOSE ASSEMBLY - 722TC27.5 16-16OS-16PH4 (STICK “A” VALVE TO BULKHEAD)	
3	KIT - 57548	1	HOSE ASSEMBLY - 787TC31.5 16-16OS-16PA9 (PROCESER - VALVE TO BULKHEAD)	
4	15225	1	CONNECTOR, STR - FF1852T-1616S	
5	58258	1	MANIFOLD, COMBINED FLOW DUAL PUMPS	
6	KIT - 57548	1	HOSE ASSEMBLY - 787TC28 16-16OS-16OS (PROCESER - VALVE TO BULKHEAD)	
7	15113	3	KIT, SPLIT FLANGE - 1” (CODE 62)	
8	KIT - 58239	1	HOSE ASSEMBLY - 722TV46 12-12OS-1209-SW (ROTATE “B” VALVE TO BULKHEAD)	
9	KIT - 58239	1	HOSE ASSEMBLY - 722TV46 12-12OS-1209-SW (ROTATE “A” VALVE TO BULKHEAD)	
10	19127	1	ELBOW, 45 - FF2068T-1212S	
11	58154	1	VALVE, MAIN - REX DISC / LEVELING	
12	53680	4	FITTING, BULKHEAD UNION ELBOW 16 WELO-WN	
13	KIT - 57548	1	HOSE ASSEMBLY - 722TC44 16-16OS-16OS-SW (STICK “B” BULKHEAD TO BOOM)	
14	16851	4	CONNECTOR, STR - FF1852T-1210S	
15	48628	2	TUBELINE, BENT 765 3/4 X 204	
16	15152	2	CONNECTOR, STR - FF1852T-1212S	
17	KIT - 58239	1	HOSE ASSEMBLY - 722TC44 12-12OS-120S-SW (ROTATE “B” BULKHEAD TO BOOM)	
18	KIT - 58239	1	HOSE ASSEMBLY - 722TC44 12-12OS-120S-SW (ROTATE “A” BULKHEAD TO BOOM)	
19	KIT - 57548	1	HOSE ASSEMBLY - 722TC44 16-16OS-16OS-SW (STICK “A” BULKHEAD TO BOOM)	
20	48629	4	TUBELINE, BENT 765 1 X 204	
21	KIT - 58239	1	HOSE ASSEMBLY - 722TC44 16-16OS-16OS-SW (PROCESER - BULKHEAD TO VALVE)	
22	KIT - 58239	1	HOSE ASSEMBLY - 722TC44 16-16OS-16OS-SW (PROCESER - BULKHEAD TO VALVE)	
23	15152	1	CONNECTOR, STR - FF1852T-1212S	
24	19592	1	ELBOW, 45 SWIVEL - FF2133T-1212S	

HARVESTER HYDRAULICS ASSEMBLY, AND INSTALLATION

RETURN AND CASE DRAIN HYDRAULIC LINES

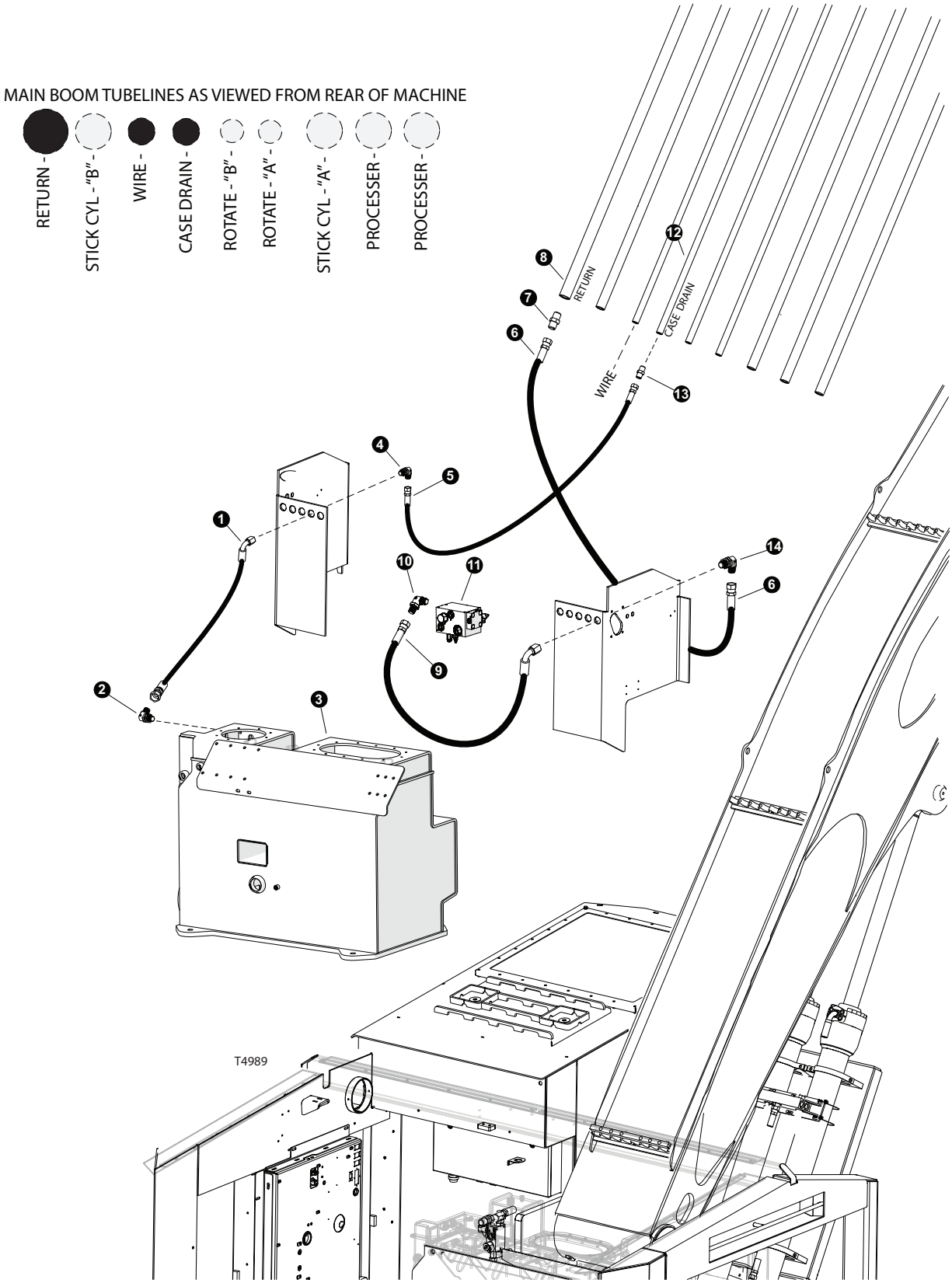

HARVESTER HYDRAULICS ASSEMBLY, AND INSTALLATION

RETURN AND CASE DRAIN HYDRAULIC LINES

REF	PART #	QTY	DESCRIPTION	SEE SECTION
1	KIT - 58239	1	HOSE ASSEMBLY - 187TC22.5 12-12OS-12OS-SW (CASE DRAIN - BULKHEAD TO HYD TANK)	
2	17688	1	ELBOW, 90 - FF1868T-1212S	
3		**1**	**HYDRAULIC TANK ASSEMBLY**	**(SEE - UP-1)**
4	**24188**	**1**	**ELBOW, 90 BULKHEAD - 855BH-TT-12**	
5	KIT - 58239	1	HOSE ASSEMBLY - 387TC44 12-12OS-12OS-SW (CASE DRAIN - BOOM TO BULKHEAD)	
6	KIT - 57548	1	HOSE ASSEMBLY - 187TC36 20-20JS-20JS-SW(RETURN - BOOM TO BULKHEAD)	
7	16851	1	CONNECTOR, STR - FF1852T-1210S	
8	48699	1	TUBELINE, MAIN BOOM RETURN	
9	KIT - 57548	1	HOSE ASSEMBLY - 187TC26 20-20JS-20J9 (RETURN - BH TO OIL COOLER MANIFOLD)	
10	18474	1	ELBOW, 90 - 849-TT-20	
11		1	HOC-CONTROL-RETURN MANIFOLD	**(SEE - UP-1)**
12	**48627**	**1**	**TUBELINE, BENT 765 1/2 X 204**	
13	**15152**	**1**	**CONNECTOR, STR - FF1852T-1212S**	
14		**1**	**FITTING, BULKHEAD UNION ELBOW 20 WELO-WN**	

HARVESTER HYDRAULICS ASSEMBLY, AND INSTALLATION

HYDRAULIC LINES - MAIN BOOM TO STICK BOOM

MAIN BOOM TUBELINES AS VIEWED FROM REAR OF MACHINE



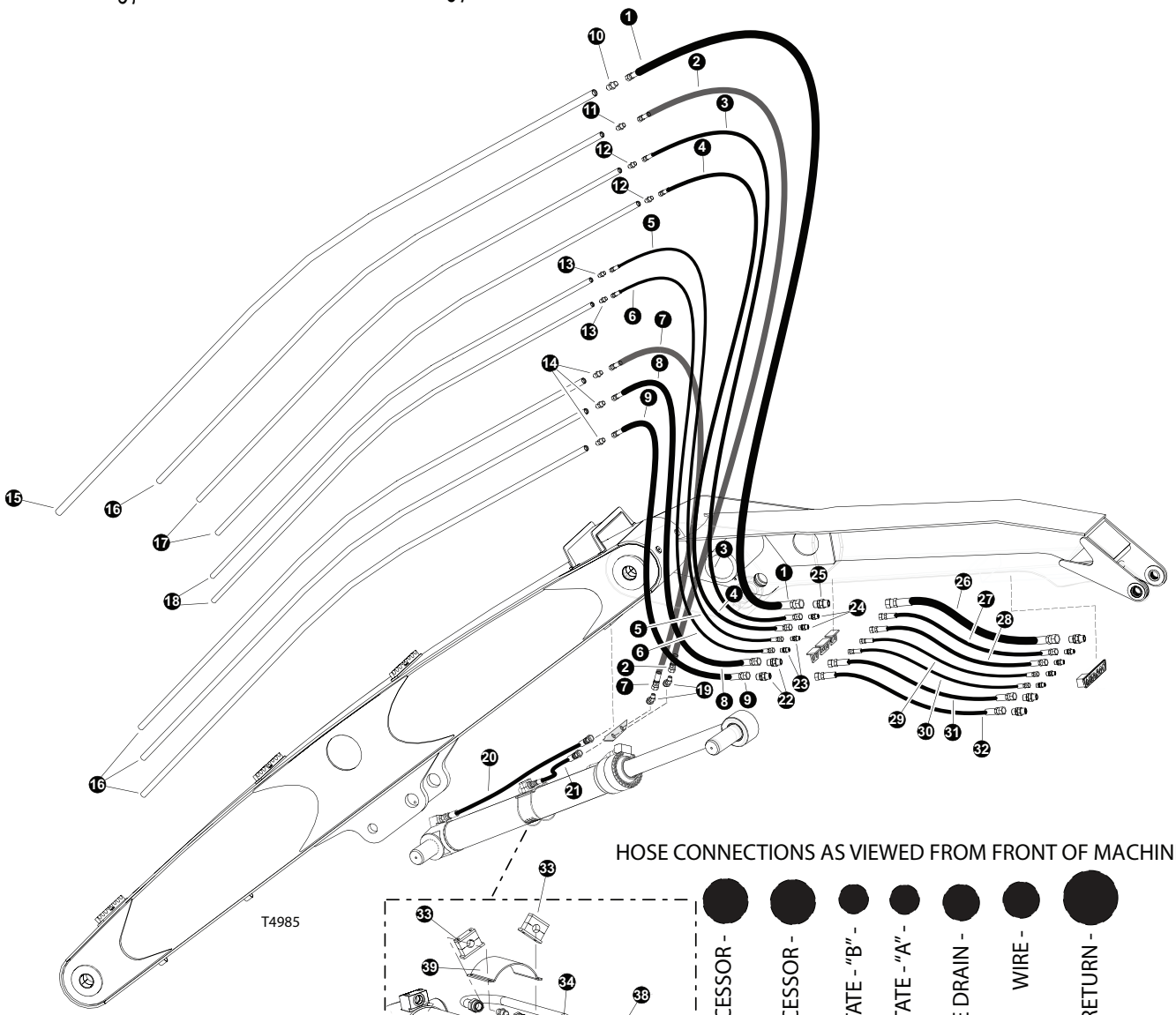

HOSE CONNECTIONS AS VIEWED FROM FRONT OF MACHINE

HARVESTER HYDRAULICS ASSEMBLY, AND INSTALLATION

HYDRAULIC LINES - MAIN BOOM TO STICK BOOM

REF	PART #	QTY	DESCRIPTION	SEE SECTION
1	KIT - 57550	1	HOSE ASSEMBLY - 187TC82 20-20JS-20JS-SW (RETURN - BULKHEAD TO TUBELINE)	
2	KIT - 57550	1	HOSE ASSEMBLY - 722TC60 16-16OS-16OS-SW (STICK “B” - TUBELINE TO BULKHEAD)	
3	KIT - 57550	1	HOSE ASSEMBLY - 187TC40 12-12OS-12OS-SW (WIRE - TUBELINE TO BULKHEAD)	
4	KIT - 57550	1	HOSE ASSEMBLY - 187TC82 12-12OS-12OS-SW (WIRE - TUBELINE TO BULKHEAD)	
5	KIT - 57550	1	HOSE ASSEMBLY - 722TC82 10-10OS-10OS-SW (ROTATE - “A” - TUBELINE TO BULKHEAD)	
6	KIT - 57550	1	HOSE ASSEMBLY - 722TC82 10-10OS-10OS-SW (ROTATE - “B” - TUBELINE TO BULKHEAD)	
7	KIT - 57550	1	HOSE ASSEMBLY - 722TC60 16-16OS-16OS-SW (STICK “A” - TUBELINE TO BULKHEAD)	
8	KIT - 57550	1	HOSE ASSEMBLY - 787TC83 16-16OS-16OS-SW (PROCESSER - TUBELINE TO BULKHEAD)	
9	KIT - 57550	1	HOSE ASSEMBLY - 787TC83 16-16OS-16OS-SW (PROCESSER - TUBELINE TO BULKHEAD)	
10	17344	1	CONNECTOR, STR - FF1852T-2020S	
11	15225	1	CONNECTOR, STR - FF1852T-1616S	
12	15152	2	CONNECTOR, STR - FF1852T-1212S	
13	16851	2	CONNECTOR, STR - FF1852T-1210S	
14	15225	3	CONNECTOR, STR - FF1852T-1616S	
15	48699	1	TUBELINE, MAIN BOOM RETURN	
16	48629	4	TUBELINE, BENT 765 1 X 204	
17	48628	2	TUBELINE, BENT 765 3/4 X 204	
18	48627	2	TUBELINE, BENT 765 1/2 X 204	
19	54316	2	ELBOW, BULKHEAD UNION 45DEG #16	
20	KIT - 57550	1	HOSE ASSEMBLY - 722TC79 16-16OS-16OS-SW (BULKHEAD TO STICK CYL BASE)	
21	KIT - 57550	1	HOSE ASSEMBLY - 722TC52 16-16OS-16OS-SW (BULKHEAD TO STICK CYL ROD)	
22	53680	2	FITTING, BULKHEAD UNION ELBOW 16 WELO-WN	
23	55382	2	FITTING, BULKHEAD - 8 WETX-WLN-S	
24	19754	2	CONNECTOR, STR BULKHEAD - 12 WLO-WLNL-S	
25	55378	1	FITTING, BULKHEAD - 20 WETX-WLN-S	
26	KIT - 57550	1	HOSE ASSEMBLY - 187TC57 20-20JS-20JS-SW (RETURN - BULKHEAD TO BULKHEAD)	
27	KIT - 57550	1	HOSE ASSEMBLY - 187TC40 12-12OS-12OS-SW (WIRE - BULKHEAD TO BULKHEAD)	
28	KIT - 57550	1	HOSE ASSEMBLY - 187TC55 12-12OS-12OS-SW (CASE DRAIN - BULKHEAD TO BULKHEAD)	
29	KIT - 57550	1	HOSE ASSEMBLY - 722TC56 10-10OS-10OS-SW (ROTATE “A” - BULKHEAD TO BULKHEAD)	
30	KIT - 57550	1	HOSE ASSEMBLY - 722TC56 10-10OS-10OS-SW (ROTATE “B” - BULKHEAD TO BULKHEAD)	
31	KIT - 57550	1	HOSE ASSEMBLY - 787TC54 16-16OS-16OS-SW (PROCESSER - BULKHEAD TO BULKHEAD)	
32	KIT - 57550	1	HOSE ASSEMBLY - 787TC54 16-16OS-16OS-SW (PROCESSER - BULKHEAD TO BULKHEAD)	
33	52372	2	CLAMP, STEEL TUBELINES(WHEEL DRIVE)SMALL	
34	57520	1	TUBELINE, STICK BOOM CYLINDER	
35	48689	2	U-BOLT - 8.13 X 7 X.25	
36	15225	1	CONNECTOR, STR - FF1852T-1616S	
37	20455	1	CONNECTOR, REDUCER - ORS FF2281T-1620S	
38	17063	1	CONNECTOR, STR - FF1852T-2016S	

PAGE INTENTIONALLY LEFT BLANK

SECTION SB-1
SHOVEL / FELLING BOOM ASSEMBLY AND INSTALLATION

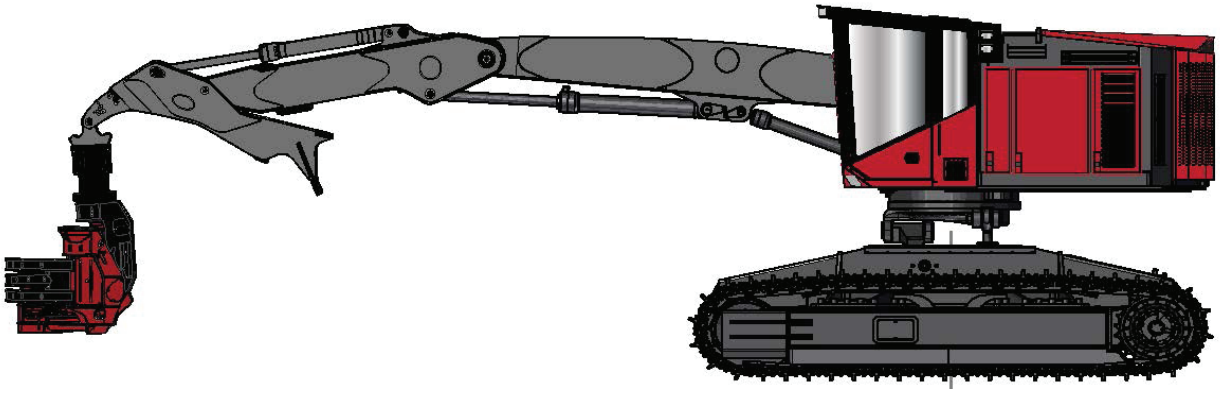

SHOVEL BOOM ASSEMBLY AND INSTALLATION

MAIN BOOM ASSEMBLY AND INSTALLATION

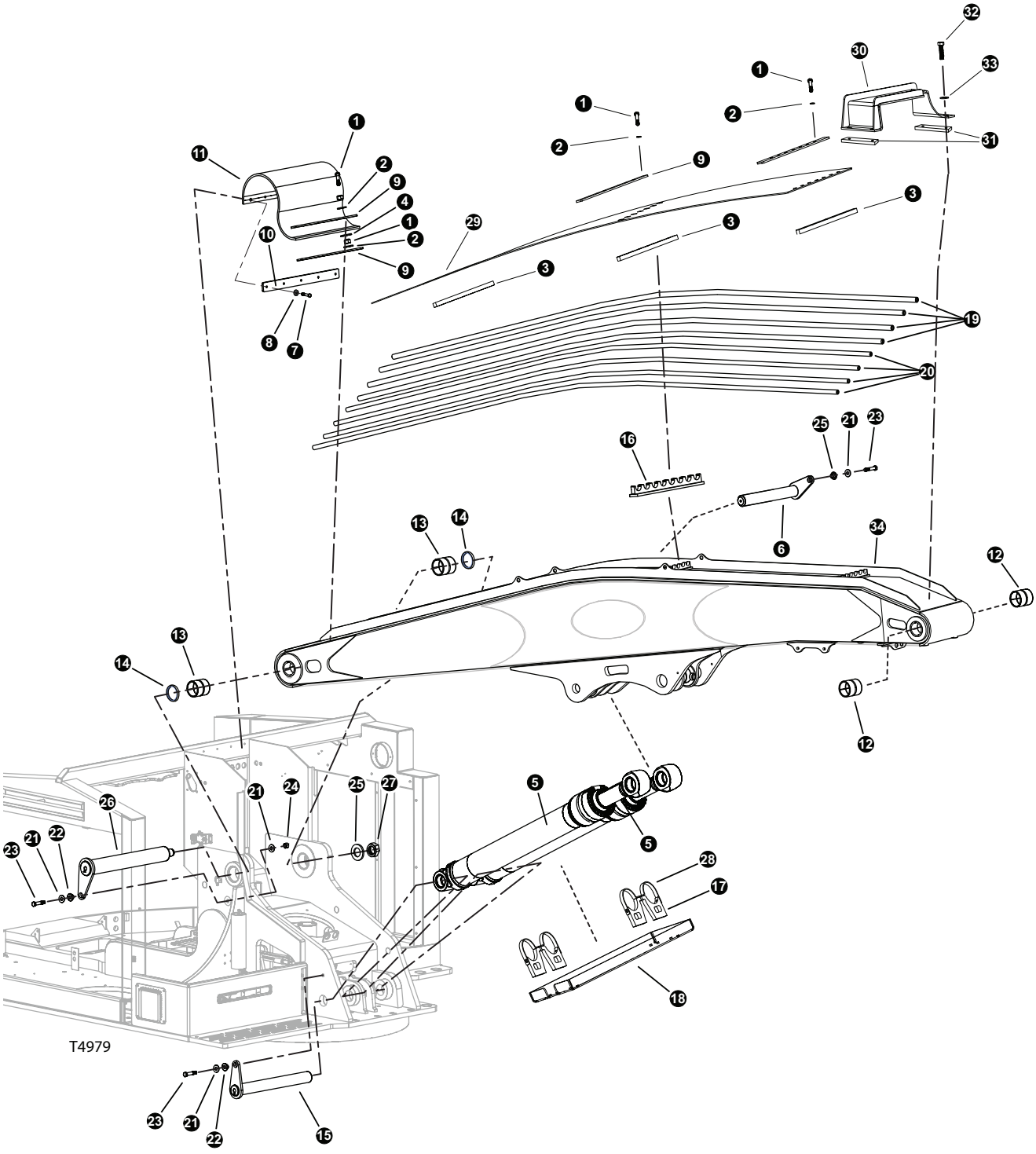

SHOVEL BOOM ASSEMBLY AND INSTALLATION

MAIN BOOM ASSEMBLY AND INSTALLATION

REF	PART #	QTY	DESCRIPTION	SEE SECTION
1	23262	21	BOLT - .625” X 3.25”	
2	10771	21	WASHER, SAE flat - 5/8”	
3	48590	4	CLAMP, SADDLE - DRILLED - HARVESTER	
4	10805	7	WASHER, FLAT - .625” EXTRA WIDE	
5	55463	2	MAIN BOOM CYLINDER	(SEE - SB-2-1)
6	48532	1	PIN, MAIN CYL BASE END - TL775	
7	10402	5	BOLT - .375” X 1.25”	
8	10802	5	WASHER, FLAT - .375”	
9	48663	1	BAR, DEBRIS FLAP HOLD-DOWN	
10	48662	1	BAR, DEBRIS FLAP HOLD DOWN	
11	62729	1	RUBBER, DEBRIS FLAP-TAIL SHOVEL	
12	48115	2	BUSHING - 4.5” X 4” X 5”	
13	48928	2	BUSHING, 5.00” OD x 4.00” ID X 5.00” L	
14	48900	2	SEAL, DUST 765 MAIN BOOM	
15	48530	1	PIN, MAIN BOOM CYL BASE TO UPPER - TL775	
16	62505	4	WELDMENT, TUBELINE CLAMP-SHOVEL	
17	62579	4	PLATE, CYLINDER CLAMP - GAURD SHOVEL	
18	62577	1	PLATE, MAIN CYL GUARD - SHOVEL 775D	
19	62602	4	TUBELINE, SHOVEL-LOGGER 1.0” X 219.0”	
20	62603	4	TUBELINE, SHOVEL-LOGGER .75” X 219.0”	
21	15550	4	WASHER, SAE FLAT - .75”	
22	18570	2	WASHER, PIN RETAINING	
23	10841	3	BOLT - .75” X 3.5”	
24	10817	1	NUT, LOCK - .75”	
25	48771	1	WASHER - 6 OD x 2.13 ID	
26	48473	1	PIN, MAIN BOOM TO UPPER - 775	
27	10728	1	NUT, NYLOCK - 2” (ZINC PLATED)	
28	62584	4	PLATE, CYLINDER STRAP - SHOVEL MAIN	
29		1	BELTING, SHOVEL MAIN BOOM TOP	
30	48804	1	GUARD, HOSE - MAIN BOOM	
31	48798	2	SPACER, TREE GUARD	
32	10775	4	BOLT - .75” X 2.5”	
33	15550	4	WASHER, SAE FLAT - .75”	
34	62225	1	WELDMENT, MAIN BOOM SHOVEL - TL775	

☐ Kit or Assembly - includes all items indented underneath.
🕮 See referenced page for component or assembly breakdown.

SHOVEL BOOM ASSEMBLY AND INSTALLATION

SHOVEL LOGGER STICK BOOM ASSEMBLY AND INSTALLATION

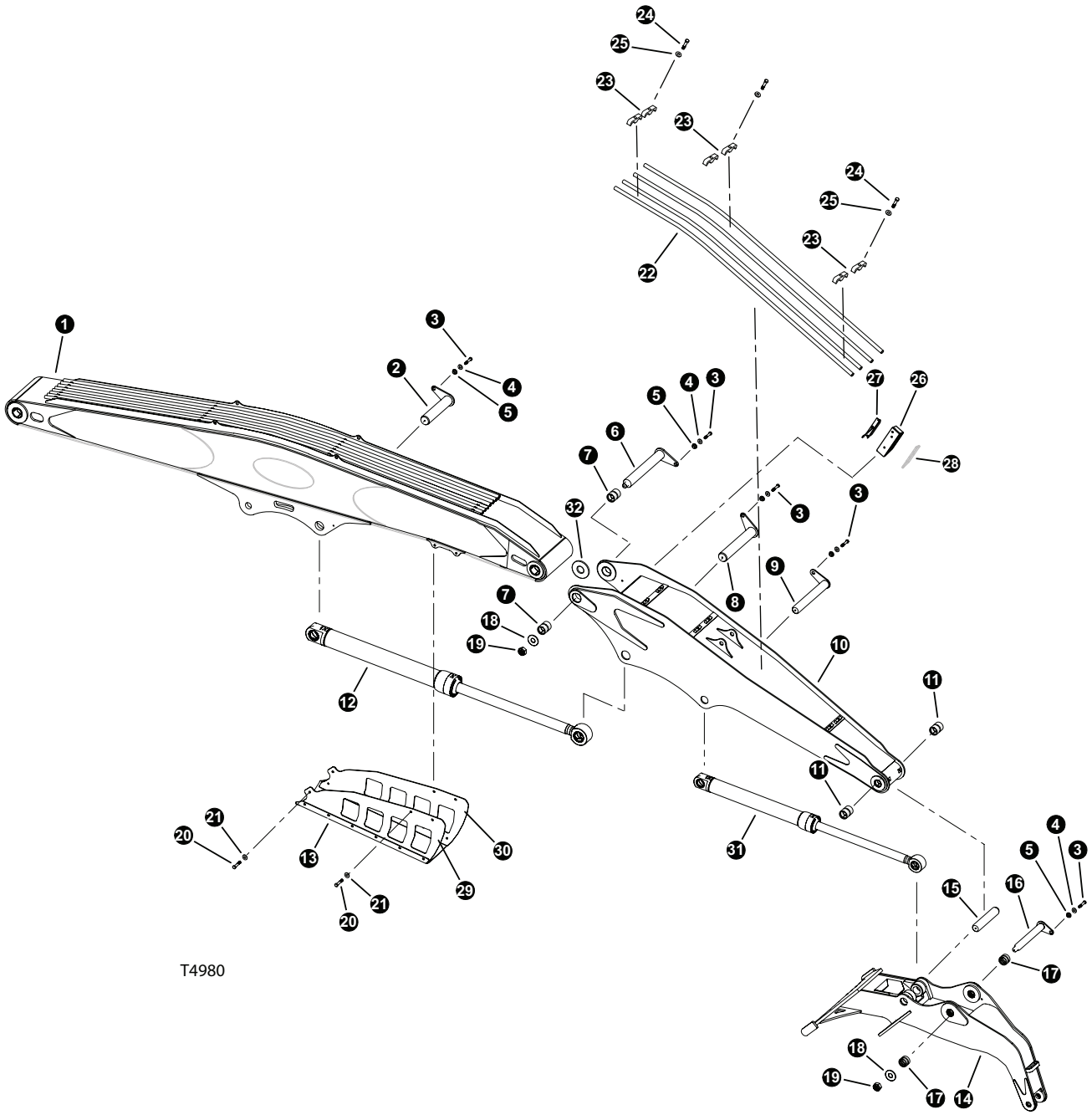

SHOVEL BOOM ASSEMBLY AND INSTALLATION

SHOVEL LOGGER STICK BOOM ASSEMBLY AND INSTALLATION

REF	PART #	QTY	DESCRIPTION	SEE SECTION
1	62225	1	WELDMENT, MAIN BOOM SHOVEL - TL775	
2	48533	1	PIN, STICK CYL CYLINDER - TL775	
3	10841	3	BOLT - .75” X 3.5”	
4	15550	3	WASHER, SAE flat - 3/4”	
5	18570	3	WASHER, PIN RETAINING	
6	48473	1	PIN, MAIN BOOM TO UPPER / STICK	
7	48116	2	BUSHING - 4.5” X 4” X 2.50”	
8	48535	1	PIN, STICK CYLINDER - (ROD)	
9	62429	1	PIN ASSY, 90MM X 25.50 - STK CYL MAIN	
10	62240	1	WELDMENT, STICK BOOM LVELING SHOVEL	
11	48425	2	BUSHING, 3.5”X3.0”X 4.5”	
12	55464	1	STICK BOOM (JIB) CYLINDER	(SEE - SB-2-3)
13	62596	1	PLATE, CYLINDER BASE -STICK SHOVEL	
14	62291	1	WELDMENT, SHOVEL HEEL - LEVELING	
15	62431	1	PIN ASSY, 90MM X 17.19	
16	62427	1	WELDMENT, 3.0 X 21.00 PIN ASSY	
17	48303	2	BUSHING, 3.5 X 3.0X 2.5	
18	60758	2	WASHER, BURNED	
19	10728	2	NUT, nylock - 2”	
20		6	BOLT	
21		6	WASHER, FLAT	
22	62636	4	TUBELINE, LL STICK 1.0” X 111.0”	
23	12447	6	CLAMP, SADDLE TOP TUBE - 1” & 1”	
24	15681	6	BOLT - .625” X 2.25”	
25	10771	6	WASHER, SAE FLAT - 625”	
26	48357	1	ASSY. BOOM LIGHT BOX - TAILSWING	
27	57384	1	LIGHT, BOOM RADIUS - LED	
28	48362	1	GUARD, BOOM LIGHT	
29	62597	1	PLATE, CYL GUARD -RH STICK SHOVEL	
30	62598	1	PALTE, CYL. GUARD - LH STICK SHOVEL	
31	62295	1	CYLINDER, HEEL BOOM (150MM BORE - 40” ST	(SEE - SB-2-3)
32	(No Part #)	AR	SHIM - 7 gauge	
	(No Part #)	AR	SHIM - 10 gauge	
	(No Part #)	AR	SHIM - 14 gauge	

SHOVEL BOOM ASSEMBLY AND INSTALLATION

SHOVEL FELLING STICK BOOM ASSEMBLY AND INSTALLATION

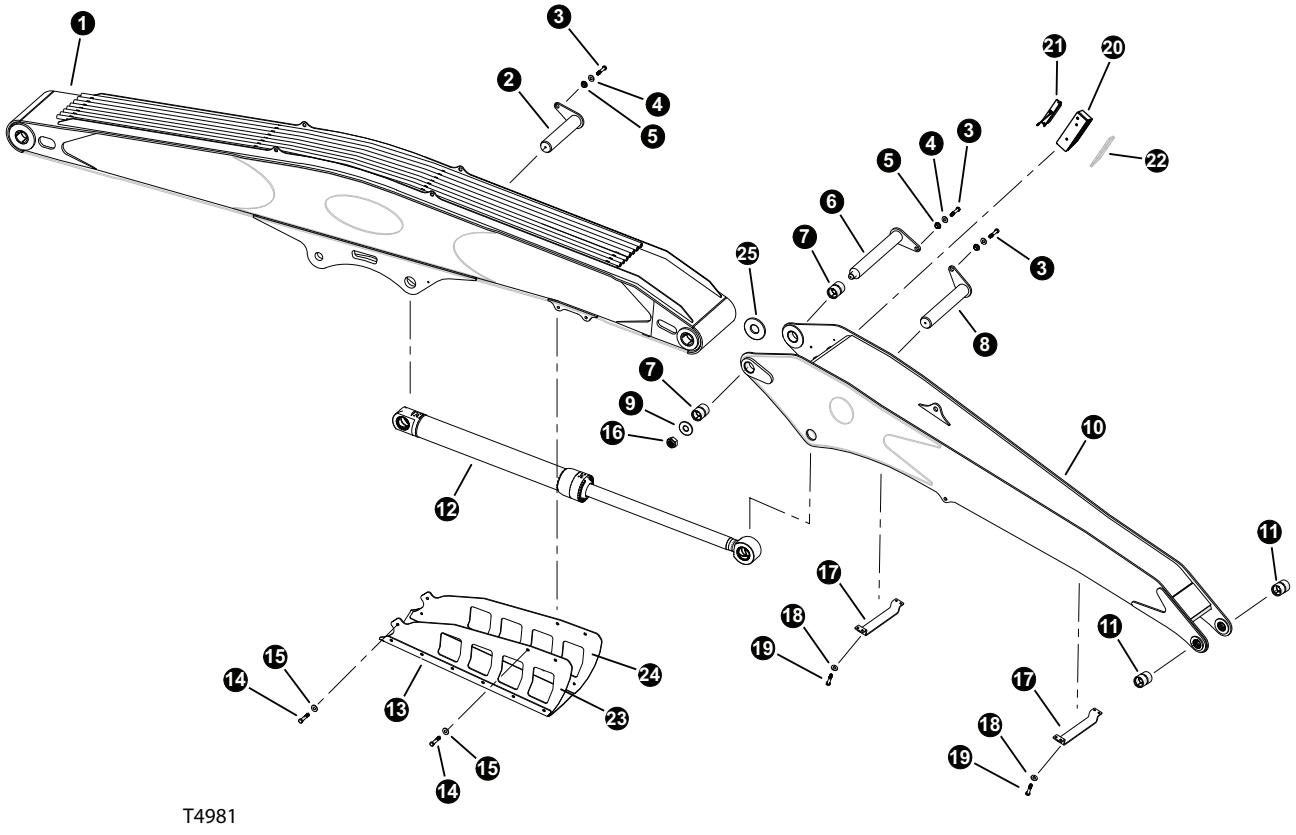

SHOVEL BOOM ASSEMBLY AND INSTALLATION

SHOVEL FELLING STICK BOOM ASSEMBLY AND INSTALLATION

REF	PART #	QTY	DESCRIPTION	SEE SECTION
1	62225	1	WELDMENT, MAIN BOOM SHOVEL - TL775	
2	48533	1	PIN, STICK CYL CYLINDER - TL775	
3	10841	3	BOLT - .75” X 3.5”	
4	15550	3	WASHER, SAE flat - 3/4”	
5	18570	3	WASHER, PIN RETAINING	
6	48473	1	PIN, MAIN BOOM TO UPPER / STICK	
7	48116	2	BUSHING - 4.5” X 4” X 2.50”	
8	48535	1	PIN, STICK CYLINDER - (ROD)	
9	60758	2	WASHER, BURNED	
10	62690	1	WELDMENT, STICK SHOVEL FELLING	
11	48678	2	BUSHING, 3.5” X 3.0” X 2.09”	
12	55464	1	STICK BOOM (JIB) CYLINDER	(SEE - SB-2-3)
13	62596	1	PLATE, CYLINDER BASE -STICK SHOVEL	
14		6	BOLT	
15		6	WASHER, FLAT	
16	10728	1	NUT, NYLOC - 2”	
17	62763	2	PLATE, BAR RETAINER	
18		8	WASHER, FLAT	
19		8	BOLT	
20	48357	1	ASSY. BOOM LIGHT BOX - TAILSWING	
21	57384	1	LIGHT, BOOM RADIUS - LED	
22	48362	1	GUARD, BOOM LIGHT	
23	62597	1	PLATE, CYL GUARD -RH STICK SHOVEL	
24	62598	1	PALTE, CYL. GUARD - LH STICK SHOVEL	
25	(No Part #)	AR	SHIM - 7 gauge	
	(No Part #)	AR	SHIM - 10 gauge	
	(No Part #)	AR	SHIM - 14 gauge	

FELLER BUNCHER BOOM ASSEMBLY AND INSTALLATION

MAIN BOOM AND STICK BOOM GREASE LINES

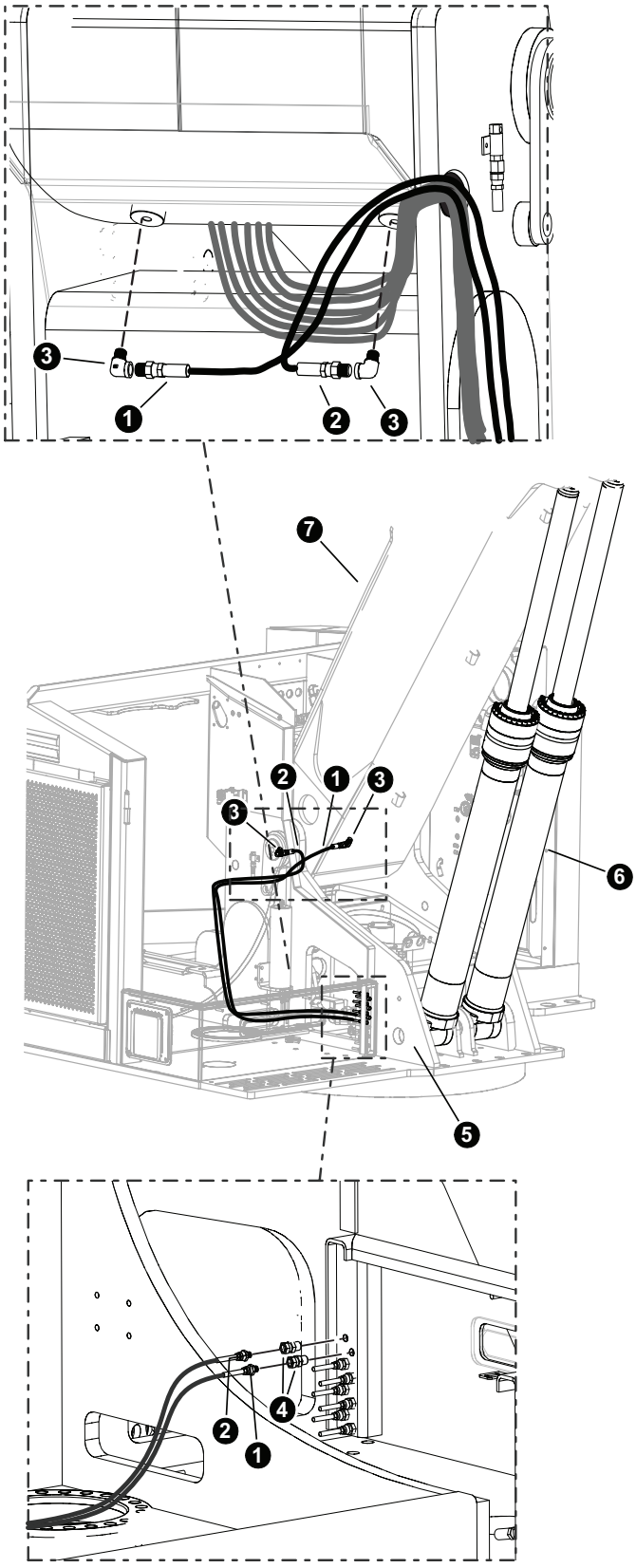

T4984

FELLER BUNCHER BOOM ASSEMBLY AND INSTALLATION

MAIN BOOM AND STICK BOOM GREASE LINES

REF	PART #	QTY	DESCRIPTION	SEE SECTION
1	(See Description)	1	GREASE JUMPER **HOSE PART # HLB94 02-02PS-02JS-WS100**	
2	(See Description)	1	GREASE JUMPER **HOSE PART # HLB94 02-02PS-02JS-WS100**	
3	22281	8	FITTING, 90° - 5546132	
4	15658	2	CONNECTOR, straight bulkhead - 2239-2-4S	
5		1	UPPER TURNTABLE	(SEE UP-1)
6		2	MAIN BOOM CYLINDER	(SEE - SB-2-1)
7		1	MAIN BOOM ASSEMBLY	(SEE - SB-1-2)

PAGE INTENTIONALLY LEFT BLANK

SECTION SB-2
SHOVEL LOGGER / FELLING BOOM CYLINDER ASSEMBLY

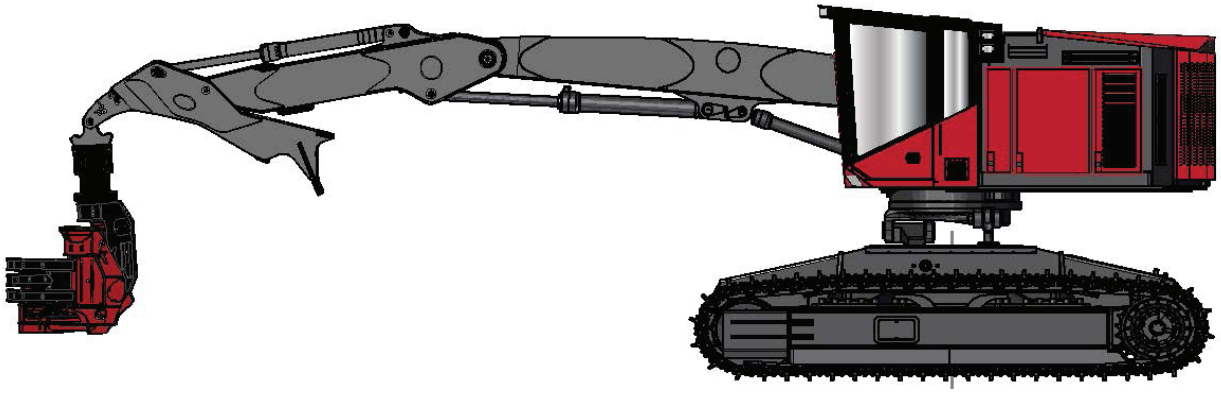

SHOVEL LOGGER / FELLING BOOM CYLINDER ASSEMBLY

MAIN BOOM (HOIST) CYLINDER - 6”

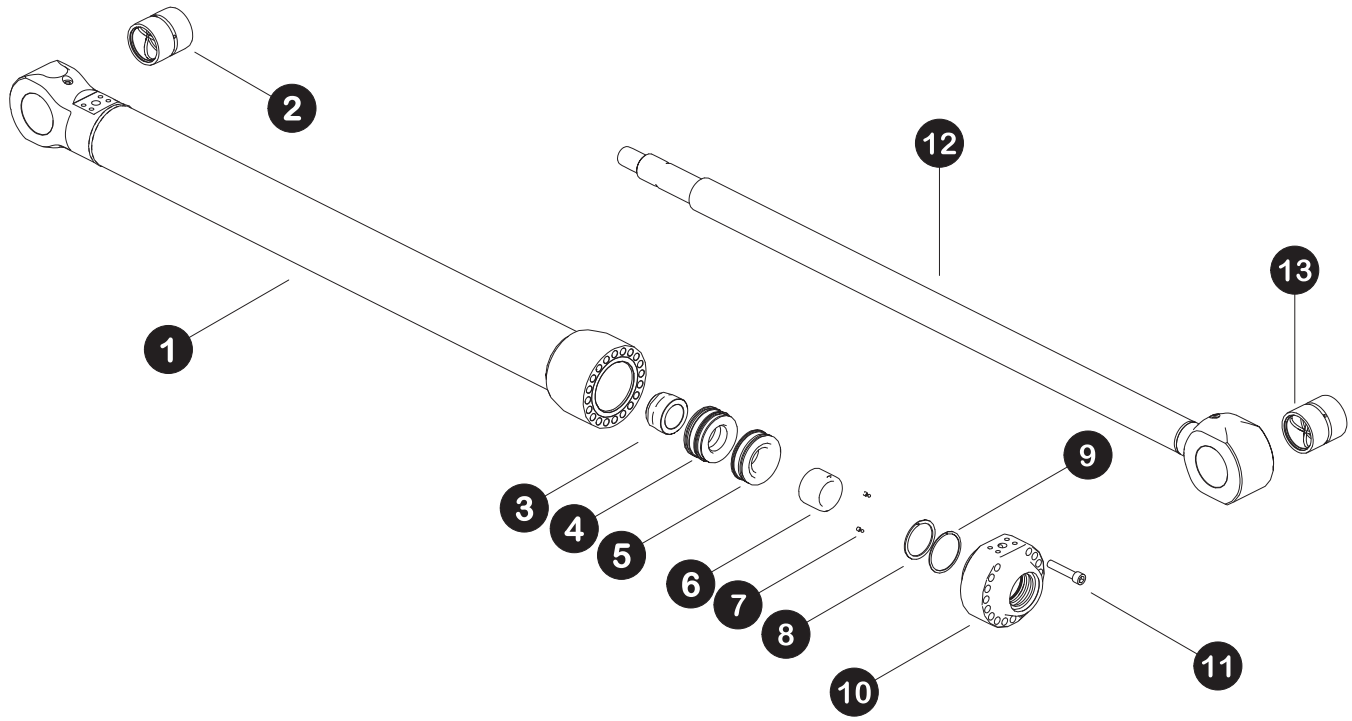

Parts 4229 07/17
12.5

SHOVEL LOGGER / FELLING BOOM CYLINDER ASSEMBLY

MAIN BOOM (HOIST) CYLINDER - 6”

REF	PART #	QTY	DESCRIPTION	SEE SECTION
-	55463	1	CYLINDER, MAIN - TL775 (4.5 Inch Dia) 54” Stroke	
1	TP450100	1	BARREL ASSEMBLY	
2	BB300400	2	BUSHING	
3	(NO REPLACEMENT #)	1	NUT, M58	
4	TP450110	1	PISTON, BACK	
5	TP450109	1	PISTON, FRONT	
6	TC110217	1	SLEEVE, Cushion	
7	NSS	2	BALL AND SETSCREW	
8	NSS	1	RING, spiral retaining	
9	NSS	1	RING, spiral retaining	
10	TP450108	1	GLAND, head	
11	(NO REPLACEMENT #)	17	BOLT, Metric	
12	TP450105	1	ROD ASSEMBLY	
13	BB300400	2	BUSHING	
-	SK45007500	1	KIT, seal repair - main boom cylinder 775	

SHOVEL LOGGER / FELLING CYLINDER ASSEMBLY

STICK BOOM (JIB) STANDARD CYLINDER (6.5" DIA)

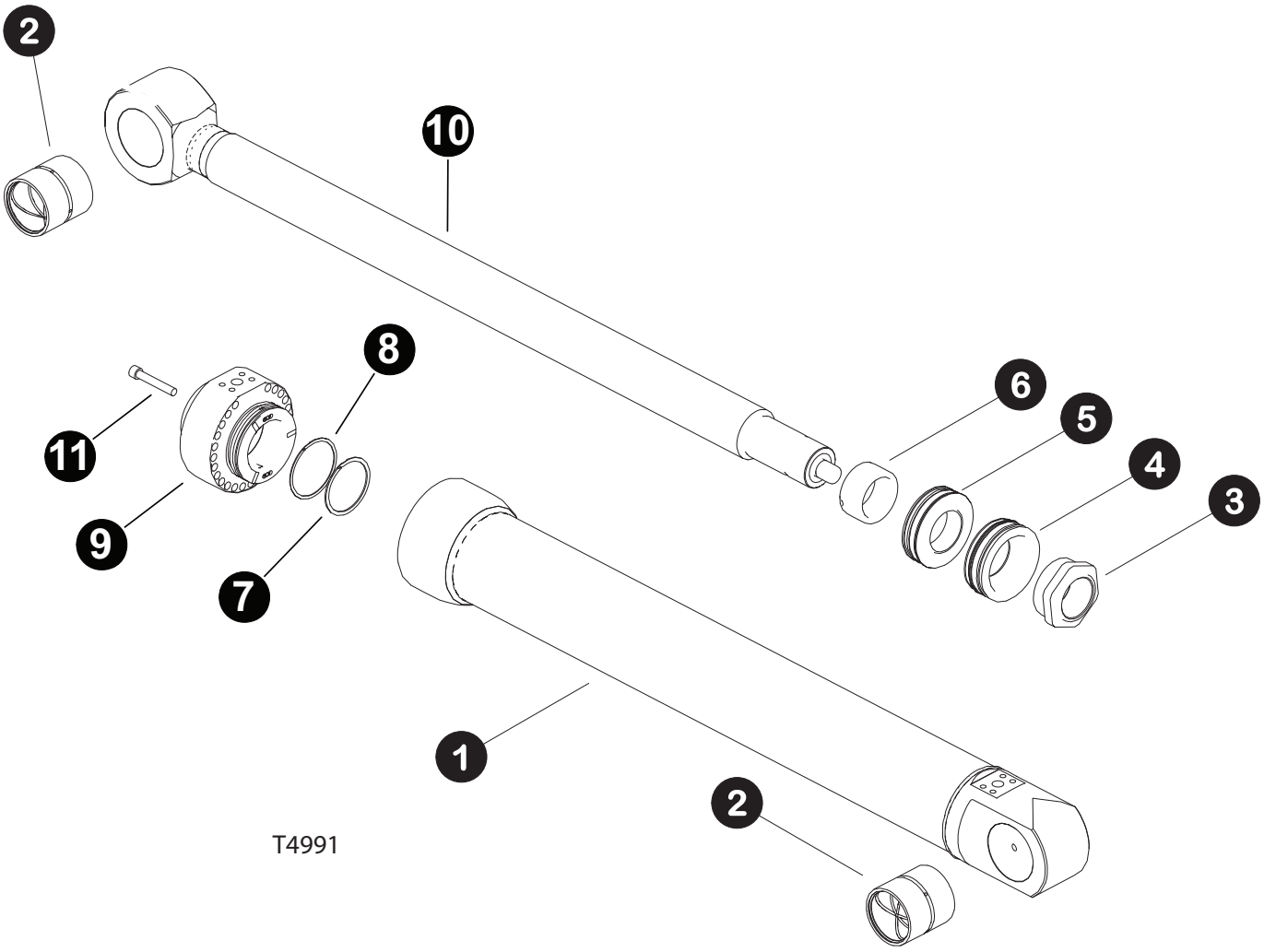

T4991

SHOVEL LOGGER / FELLING CYLINDER ASSEMBLY

STICK BOOM (JIB) STANDARD CYLINDER (6.5" DIA)

REF	PART #	QTY	DESCRIPTION . . . . . SEE PAGE
-	55464	1	CYLINDER, STICK - TL775 (6.5 INCH DIA) 54" Stroke
1	TP650100	1	BARREL ASSEMBLY
2	BB425500	2	BUSHING
3	(NO REPLACEMENT #)	1	NUT M90
4	TP650110	1	PISTON, Back
5	TP650109	1	PISTON, Front
6	TP650117	1	SLEEVE, Cushon
7	(NO REPLACEMENT #)	1	Int spiral retaining ring
8	(NO REPLACEMENT #)	1	Int spiral retaining ring
9	TP650108	1	HEAD GLAND
10	TP650105	1	ROD
11	(NO REPLACEMENT #)	25	BOLT - M16X100 (173 FT-LBS)
-	SK65011000	1	KIT, seal repair - Stick cylinder

(Please Verify Part Number Stamped on Base End of Cylinder Before Ordering Parts)

SHOVEL LOGGER / FELLING CYLINDER ASSEMBLY

HEEL CYLINDER

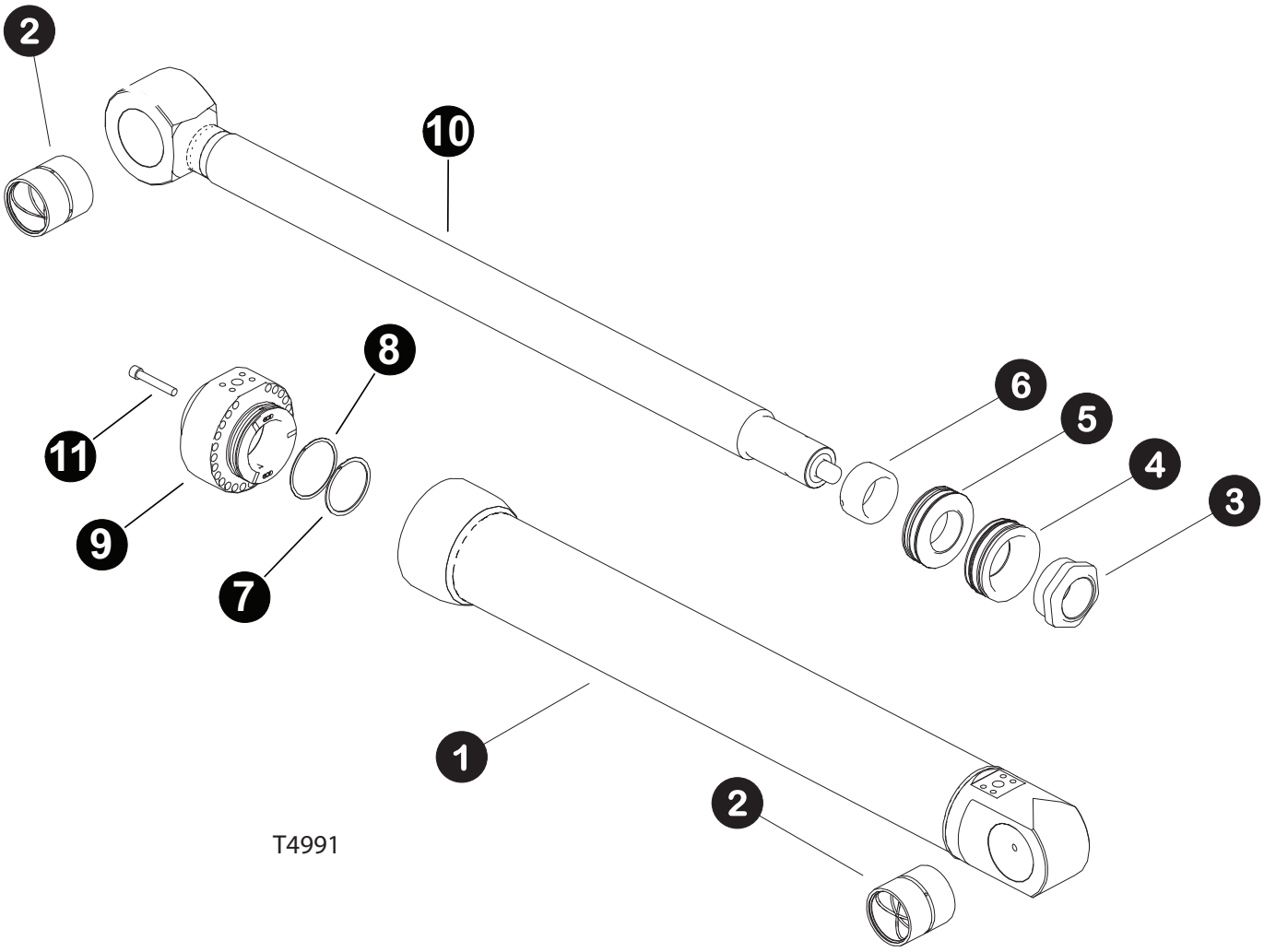

T4991

SHOVEL LOGGER / FELLING CYLINDER ASSEMBLY
HEEL CYLINDER

REF	PART #	QTY	DESCRIPTION . . . . . SEE PAGE
-	62295	1	CYLINDER, HEEL BOOM (150MM BORE - 40” ST
1	TPM150400	1	BARREL ASSEMBLY
2	BBM090100	1	BUSHING
3	LNUTM75	1	LOCKNUT M75-2 6H
4	TIM150110	1	PISTON, Back
5	TIM650109	1	PISTON, Front
6	TIM650117	1	SLEEVE, Cushon
7	WHM-475	1	Int spiral retaining ring
8	DNH-112	1	Int spiral retaining ring
9	TIM150108	1	HEAD GLAND
10	TPM150405	1	ROD
11	SHCS M16 X 90	21	SHCS METRIC G12.9
-	SKM15010002	1	KIT, seal repair - Stick cylinder

(Please Verify Part Number Stamped on Base End of Cylinder Before Ordering Parts)

PAGE INTENTIONALLY LEFT BLANK

SECTION SBH-1
SHOVEL LOGGER / FELLING HYDRAULICS ASSEMBLY AND INSTALLATION

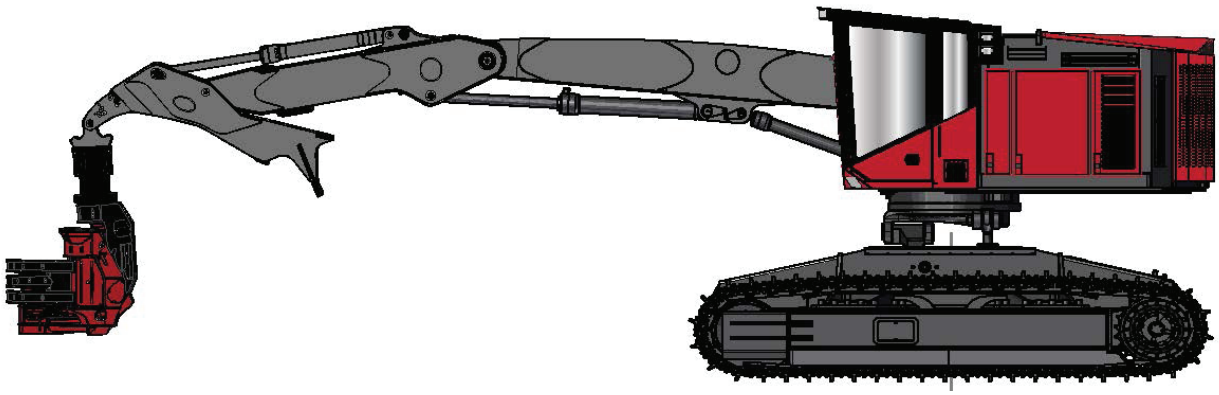

SHOVEL / FELLING HYDRAULICS ASSEMBLY, AND INSTALLATION

IMPLEMENT PUMP HYDRAULICS PARTS AND ASSEMBLY

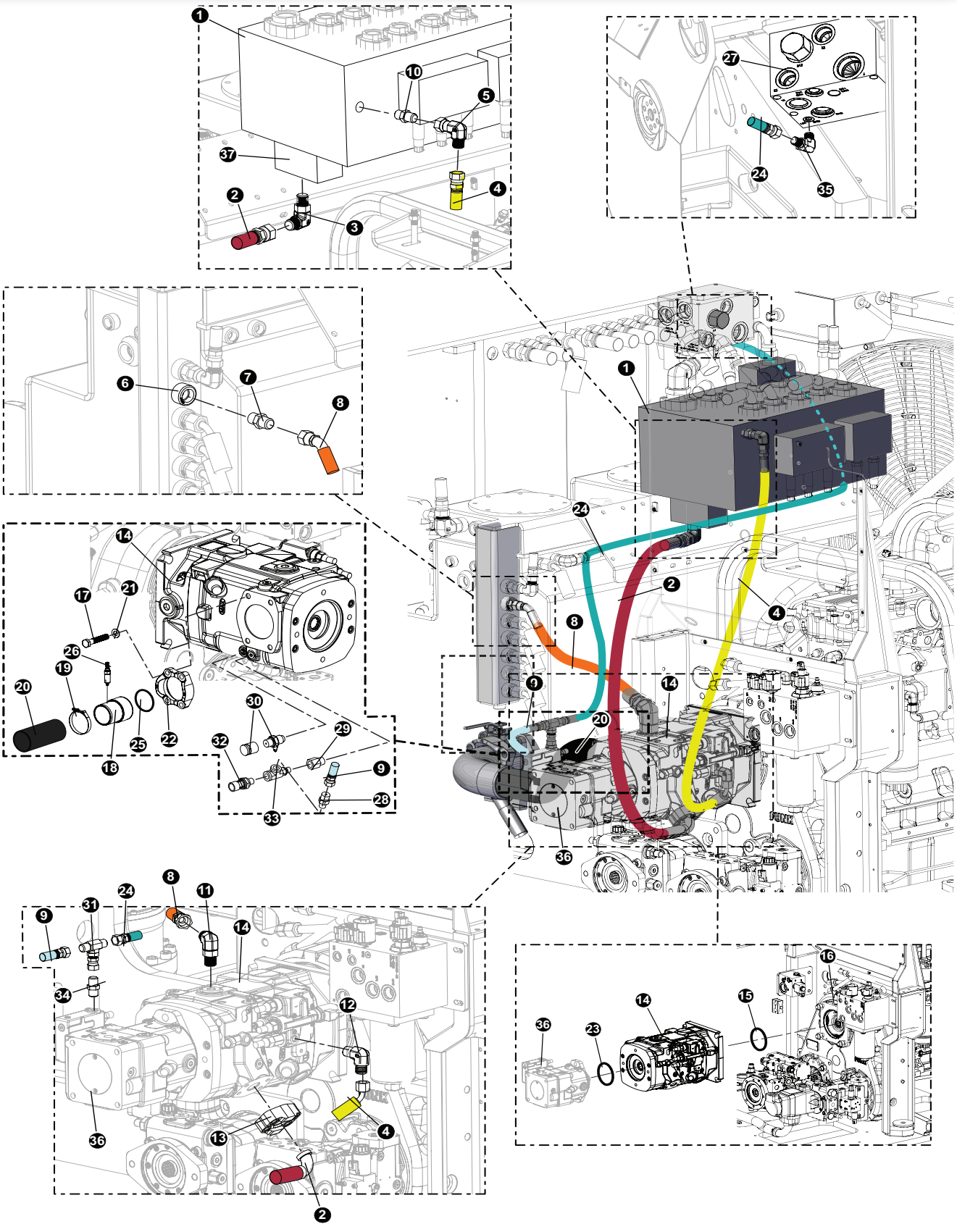

SHOVEL / FELLING HYDRAULICS ASSEMBLY, AND INSTALLATION

IMPLEMENT PUMP HYDRAULICS PARTS AND ASSEMBLY

REF	PART #	QTY	DESCRIPTION	SEE SECTION
1	58154	1	VALVE, MAIN - REX DISC / LEVELING	
2	(See Description)	1	PRESSURE, IMPLEMENT **HOSE PART # 787TC72 20-20OS-20PH9-SW**	
3	17055	1	ELBOW, 90 - FF1868T-2020S	
4	(See Description)	1	Hose, Valve LS, **Hose Part # 787TC75 06-06OS-06O4-W**	
5	20035	1	ELBOW, 90 SWIVEL - 6 C6LO-S	
6		1	TANK, HYDRAULIC - 775	(SEE - UP-2)
7	18406	1	CONNECTOR, STR - FF1852T-1612S	
8	(See Description)	1	CASE IMPLEMENT HOSE ASSEMBLY, **HOSE PART #: 187TC46 16-16OS-16O4**	
9	(See Description)	1	Hose, Disc Saw Load Sense Jumper **Hose Part # 787TC14 04-04OS-04OS-W**	
10	18034	1	CONNECTOR, STR - FF1852T-0606S	
11	15228	2	ELBOW, 90 - FF1868T-1616S	
12	16296	1	ELBOW, 90 - FF1868T-0606S	
13	15114	1	KIT, SPLIT FLANGE - 1.25” (CODE 62)	
14		1	PUMP, IMPLEMENT - REX 175CC/40 W/HP CONT	(SEE - HH-15)
15	15442-2	1	O-RING, PUMP DRIVE PILOT	
16		1	TRANSMISSION, TRIPLE PUMP DRIVE	(SEE - EE-1)
17	(see description)	4	BOLT - 5/8” x 1 3/4” (Lawson PN #A697)	
18	60835	1	TUBE, SUCTION - 175CC TAILSWING ONLY	
19	15613	1	CLAMP, STRAP BAND - 3.5”	
20	(See Description)	1	HOSE ASSEMBLY, **HOSE PART #: 7216-300248 26-0-0**	
21	10771		WASHER, SAE FLAT - .625”	
22	58139	1	FLANGE, 13001H-5656K 175CC PUMP 57865	
23	58256	1	O-RING, THRU-DRIVE SERIES 40 (145/175)	
24	(See Description)	1	Hose, Disc Saw Load Sense **Hose Part # 787TC120 04-04OS-04OS-W**	
25	58992	1	O-RING, 175CC SUCTION ELBOW	
26	55615	1	FITTING, ADAPTOR - BLEED - SUCTION TUBE	
27		1	MANIFOLD, OIL COOLER CONTROL - D SERIES	(SEE - UP-2)
28	55214	1	CONNECTOR, STR - 848-TTO-04X04 (W/.031)	
29	16294	1	BUSHING, REDUCER - 6410-6-4	
30	57820	2	TAP, GAUGE PORT # 6 SAE - Oring Boss	
31	23541	1	TEE - 4 S6LO-S	
32	24532	1	TRANSDUCER, DISC SAW Pressure	
33	52186	1	TEE, RUN - MALE (4 A0G5J5-S)	
34	15124	1	CONNECTOR, STR - FF1852T-0406S	
35	16540	1	ELBOW, 90 - FF1868T-0404S	
36		1	PUMP, AUX - HIGH PRESSURE (60CC)	(SEE - HH-1-16)
37	17016	1	CONNECTOR, FLANGE PAD - 1.25 C62	

See referenced page for component or assembly breakdown.
Bulk material - order length required in feet or meters.
Kit or Assembly - includes all items indented underneath.

SHOVEL / FELLING HYDRAULICS ASSEMBLY, AND INSTALLATION

HYDRAULICS PARTS AND ASSEMBLY

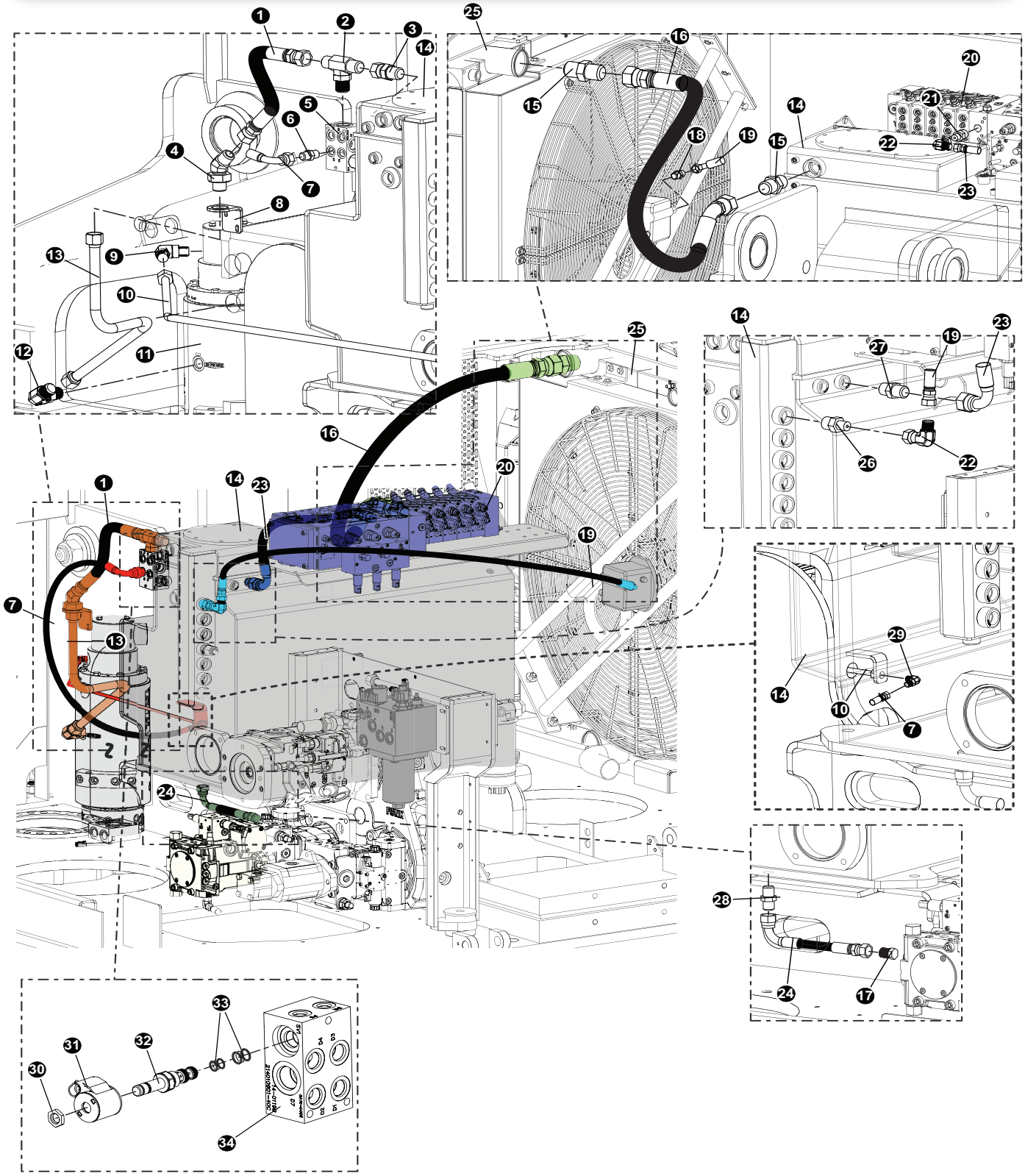

SHOVEL / FELLING HYDRAULICS ASSEMBLY, AND INSTALLATION

HYDRAULICS PARTS AND ASSEMBLY

REF	PART #	QTY	DESCRIPTION	SEE SECTION
1	57941 (Kit #)	1	HOSE ASSEMBLY - P# 187TC22.5 16-16JS-16JS (Swing Brake Manifold to BH - Swing BR CD)	
2	55622	1	TEE, BRANCH - STRAIGHT THREAD #16	
3	11352	1	CONNECTOR, STR SWIVEL - 1404-16-16	
4	54806	1	45* Bulkhead Union Elbow -16 JIC	
5	55259 (Assm.)	1	Swing Brake Maninfold (See Below for Breakdown)	
6	53103	1	FITTING, 6-8 - ORB-JIC 830-B	
7	57941 (Kit #)	1	HOSE ASSEMBLY - P# 387TC41 06 06JS 06J9 (Swing BR Mfld to BH)	
8	47291	1	BRACKET, BH 16 JIC	
9	15479	1	ELBOW, 90 - 6801-6-4	
10	57277	1	TUBELINE, SD TO SEAL DRAIN BULKHEAD to RMV	
11		1	Rotary Maninfold	(SEE - UP-1)
12	11306	1	ELBOW, 90 12 C5OX-S to RMV2	
13	57278	1	TUBELINE, RM V2 TO V2 BULKHEAD	
14	(Click Here)	1	Hydraulic Tank	(SEE - UP-2)
15	22448	1	CONNECTOR, STR - 848-TTO-24X24	
16	57941 (Kit #)	1	HOSE ASSEMBLY - P# 187TC40 24 24OS-24O4 (Radiator to Hydraulic Tank)	
17	16033	1	PLUG - FF9767-12S	
18	18034	1	CONNECTOR, STR - FF1852T-0606S	
19	57941 (Kit #)	1	HOSE ASSEMBLY - P# 387TC73 06 06OS 06O9 (Hydraulic Tank to Radiator)	
20	58154	1	Main Control Valve	
21	(No Replacement Part)	1	(Contact Rexroth for Replacement Fitting)	
22	20035	1	ELBOW, 90 SWIVEL - 6 C6LO-S	
23	57941 (Kit #)	1	HOSE ASSEMBLY - P# 187TC28 08 08OS 08O9 (Main Control Valve to Hydraulic Tank)	
24	57941 (Kit #)	1	HOSE ASSEMBLY - P# 187TC10 12 12OS 12O9 (Hydraulic EOL)	
25		1	Radiator	(SEE - UP-3)
26	57620	1	FITTING, STR 6-12 F5OLO-S	
27	22901	1	CONNECTOR, STR - 6-8 F5OLO-S	
28	15201	1	CONNECTOR, STR - FF2031T-1212S	
29	55347	1	FITTING, ELBOW - BULKHEAD 6 WETX-WLN-S	
30	(See Desc.)	1	NUT, (P# 7004400)	
31	53992	1	COIL, (P# 4303724)	
32	53734	1	VALVE, SOLENOID - Parking Brake - (TM P# SV08-31-0-N-24ERZ)	
33	53735	1	KIT, seal - parking brake solenoid (SK10-3X-MM)	
34	55259	1	MANIFOLD, CASE DRAIN/SWING LOCK	

See referenced page for component or assembly breakdown.
Kit or Assembly - includes all items indented underneath.

SHOVEL / FELLING HYDRAULICS ASSEMBLY, AND INSTALLATION

SWING MOTOR HYDRAULICS PARTS AND ASSEMBLY

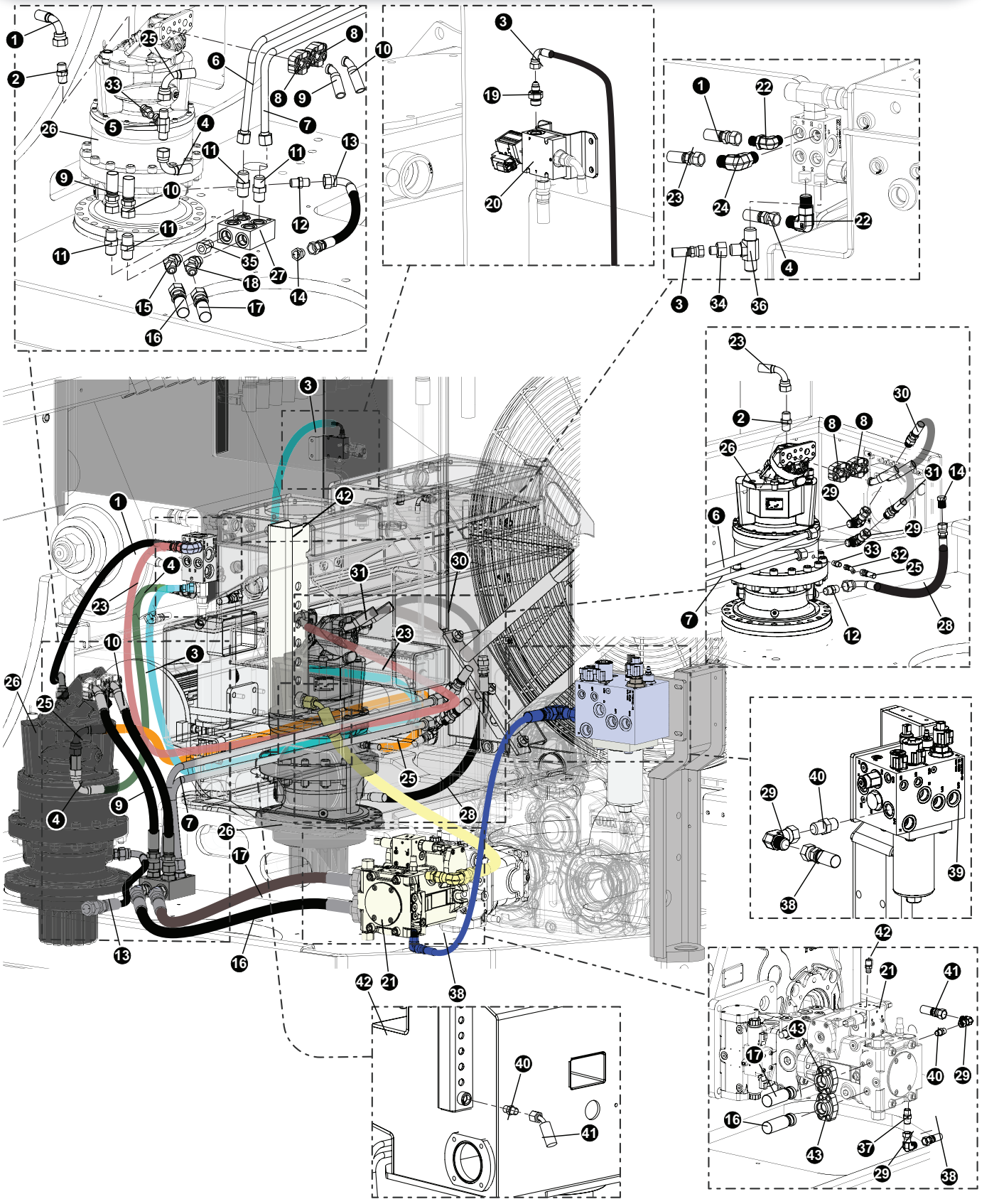

SHOVEL / FELLING HYDRAULICS ASSEMBLY, AND INSTALLATION

SWING MOTOR HYDRAULICS PARTS AND ASSEMBLY

REF	PART #	QTY	DESCRIPTION	SEE SECTION
1	57941 (Kit #)	1	HOSE ASSEMBLY - P# 387TC 27 08-08JS-08O9 (Control Valve to Manifold)	
2	24182	1	CONNECTOR, STR - 6002-08-8BSPP	
3	58179 (KIT #)	1	HOSE ASSEMBLY - P# 387TC 106 04-04JS-04J9 (Charge to Greaser Valve)	
4	58179 (KIT #)	1	HOSE ASSEMBLY - (P# 387TC 29 04-04OS-04O9) (Swing Brake to Manifold)	
5	23541	1	TEE - 4 S6LO-S	
6	57300	1	TUBELINE, SWING MAN L TO R SWNG MTR BULKHEAD	
7	57316	1	TUBELINE, SWNG MAN R TO R SWNG MTR BULK	
8	16660	4	KIT, SPLIT FLANGE - .75 (CODE 62)	
9	58179 (KIT #)	1	HOSE ASSEMBLY - (P# 787TC 22.5 12-12JS-12PH4)	
10	58179 (KIT #)	1	HOSE ASSEMBLY - (P# 787TC 23.5 12-12JS-12PH4)	
11	11324	4	CONNECTOR, STR - 6400-12	
12	24182	2	CONNECTOR, STR - 6002-08-8BSPP	
13	58179 (KIT #)	1	HOSE ASSEMBLY - (P# 387TC 30 08-08OS-08O9)	
14	16032	2	PLUG - FF9767-08S	
15	16460	1	ELBOW, 45 - FF2068T-1616S	
16	58179 (KIT #)	1	HOSE ASSEMBLY - (P# 787TC 48 16-16OS-16PH)	
17	58179 (KIT #)	1	HOSE ASSEMBLY - (P# 787TC 48.5 16-16OS-16PH)	
18	21039	1	ELBOW, 45 - 16-12 V5OLO-S	
19	54809	1	CONNECTOR, STR - 4 JIC x -6 ORB	
20	57509	1	VALVE, AUTO GREASE SYSTEM	
21	57214	1	PUMP, SWING (TL765C) (90cc)	
22	16296	2	ELBOW, 90 - FF1868T-0606S	
23	58179 (KIT #)	1	HOSE ASSEMBLY - **(P# 387TC 84 08-08JS-08O9)**	
24	54810	1	ELBOW, 90* LONG -8 JIC	
25	58179 (KIT #)	1	HOSE ASSEMBLY - **(P# 387TC 55 04-04OS-04O9)**	
26	57213	1	MOTOR, SWING - L&S 32.5:1 / 56CC (TL765C)	
27	57284	1	MANIFOLD, SWING COMBINE FLOW	
28	58179 (KIT #)	1	HOSE ASSEMBLY - **(P# 387TC 36 08-08OS-08O9)**	
29	15477	4	ELBOW, 90 SWIVEL - 12 C6X-S	
30	58179 (KIT #)	1	HOSE ASSEMBLY - **(P# 787TC 31 12-12MJ-12PH4)**	
31	58179 (KIT #)	1	HOSE ASSEMBLY - **(P# 787TC 26 12-12MJ-12PH4)**	
32	53719	1	FITTING, SWIVEL NUT ELBOW - 45 DEG	
33	19469	2	CONNECTOR, STR METRIC - 4M12F82EDMLO-S	
34	16294	1	BUSHING, REDUCER - 6410-6-4	
35	19291	1	BUSHING, REDUCER - 6410-12-16	
36	55701	1	FITTING, TEE - 6 R5OX-S	
37	52078	1	CONNECTOR, STR - (10-12 F50L0-S)	
38	58179 (Kit#)	1	722TC42 12-12JS-12J4-SW	
39		1	Charge/Cooler Manifold	(SEE - EE-1)
40	15152	3	CONNECTOR, STR - FF1852T-1212S	
41	58179 (KIT #)	1	HOSE ASSEMBLY - **(P# 187TC48.5 12-12OS-12O4)**	
42	57819	1	TAP, GAUGE PORT - #4 SAE Oring Boss- ST	
43	15113	2	KIT, SPLIT FLANGE - 1” (CODE 62)	

See referenced page for component or assembly breakdown.

Kit or Assembly - includes all items indented underneath.

SHOVEL / FELLING HYDRAULICS ASSEMBLY, AND INSTALLATION

CHARGE MANIFOLD PRESSURE, DRAINAGE, AND TANK CONNECTIONS

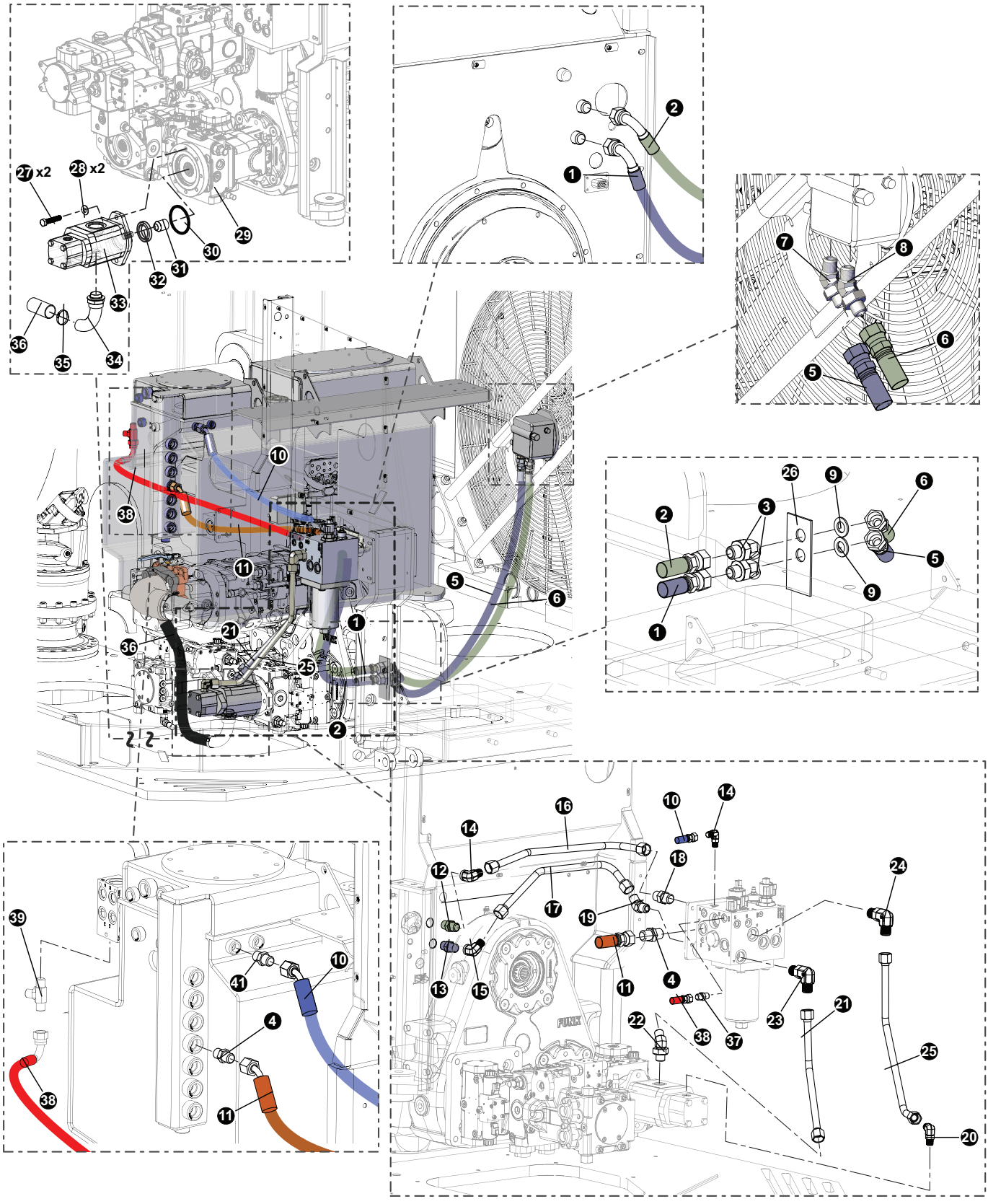

SHOVEL / FELLING HYDRAULICS ASSEMBLY, AND INSTALLATION

CHARGE MANIFOLD PRESSURE, DRAINAGE, AND TANK CONNECTIONS

REF	PART #	QTY	DESCRIPTION	SEE SECTION
1	(See Description)	1	Radiator Return Hose (Suppier Hose Part #: **387TC 42.5 12 12OS -12J9**) - Engine BH to Fan Motor BH	
2	(See Description)	1	Radiator Supply Hose (Suppier Hose Part #: **387TC 42.5 12 12OS -12J9**) -Engine BH to Fan Motor BH	
3	19754	2	CONNECTOR, STR BULKHEAD - 12 WLO-WLNL-S	
4	15152	3	CONNECTOR, STR - FF1852T-1212S	
5	(See Description)	1	Radiator Return Hose (Suppier Hose Part #: **187TC 45 12-12OS-16OS**) -Fan Motor to Fan Motor BH	
6	(See Description)	1	Radiator Supply Hose (Suppier Hose Part #: **387TC 43 12-12OS-12OS**) -Fan Motor to Fan Motor BH	
7	19127	1	ELBOW, 45 - FF2068T-1212S	
8	16460	1	ELBOW, 45 - FF2068T-1616S	
9	57126	2	Washer	
10	(See Description)	1	Radiator Return Hose (Suppier Hose Part #: **387TC 63 06-06OS-0604-W**) - Hydraulic Tank to Charge Manifold)	
11	(See Description)	1	Charge nlock case drain (Suppier Hose Part #: **187TC 52 12-12OS -1204**) - Hydraulic Tank to Charge Manifold)	
12	11324	1	CONNECTOR, STR - 6400-12	
13	17009	1	CONNECTOR, STR BULKHEAD - 2700-12	
14	54704	1	ELBOW, 90 BULK 12 WETX-WLN-S (12 JIC MM)	
15	15477	1	ELBOW, 90 SWIVEL - 12 C6X-S	
16	58032	1	TUBELINE, FR TO BULKHEAD FAN RETURN	
17	57929	1	TUBELINE, F0 TO BULKHEAD FAN PRESSURE	
18	11324	1	CONNECTOR, STR - 6400-12	
19	15474	1	ELBOW, 45 - 6802-8	
20	53032	1	ELBOW, 90 - 12 JIC X 10 ORB	
21	57928	1	TUBELINE, F1 TO FRONT GEAR PUMP FAN PRESSURE	
22	15472	1	ELBOW, 45 SWIVEL - 12 V6X-S	
23	11306	1	ELBOW, 90 12 C5OX-S	
24	11306	1	ELBOW, 90 12 C5OX-S	
25	57927	1	TUBELINE, C1 TO REAR GEAR PUMP	
26	62152	1	WELDMENT, BH-TUBELINES - 765/775	
27	18415	2	BOLT - 12MM-1.75P X 30MM	
28	18735	2	WASHER, FLAT - 12MM	
29	(Click Here)	1	TRACK DRIVE PUMP	(SEE - DH-2)
30	21624	1	O-RING, CHARGE PUMP PILOT (AA4VG90)	
31	R909650371	1	COUPLING, Charge Pump	
33	57609	1	PUMP, CHARGE - DUAL FLOW	
32	58177		SHAFT SEAL 25.4-38.1-6.35 NBR	
	1517010194		SEAL KIT	
	1517010152		SEAL KIT	
34	57663	1	FITTING, ELBOW - HOSE END 90°	
35	55614	2	CLAMP, CONSTANT TORQUE - 1.75”	
36	58179	1	KIT, HOSE-D SERIES UPPER (Suppier Hose Part #: **811 HT42 24-0-0**)	
37	18034	1	CONNECTOR, STR - FF1852T-0606S	
38	(See Description)	1	Charge Pressure Gauge (Suppier Hose Part #: **387TC75 06-06OS-06J9-W**)	
39	55701	1	FITTING, TEE - 6 R5OX-S	

SHOVEL / FELLING HYDRAULICS ASSEMBLY, AND INSTALLATION

CAB LEVELING HYDRAULICS PARTS AND ASSEMBLY

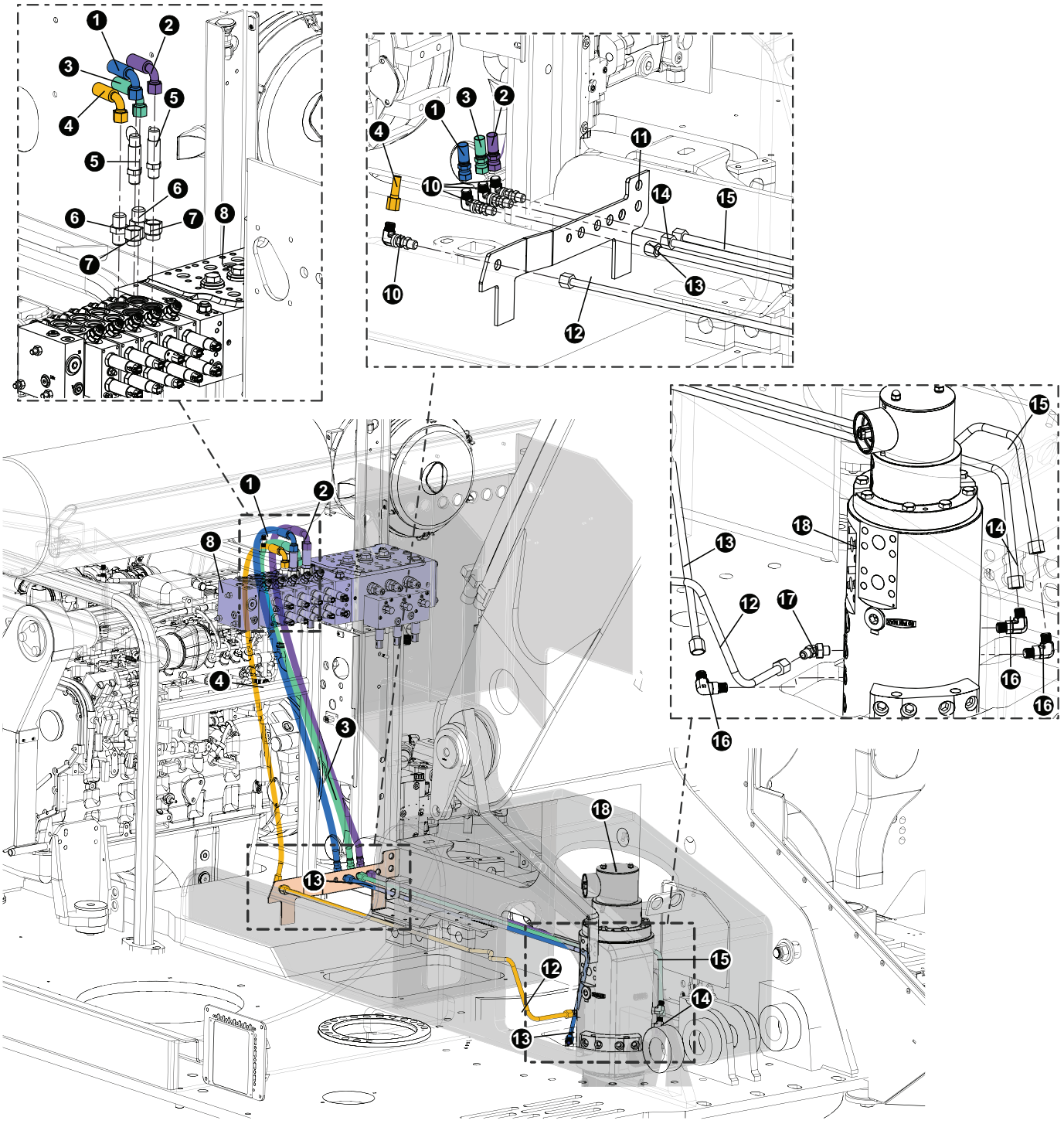

SHOVEL / FELLING HYDRAULICS ASSEMBLY, AND INSTALLATION

CAB LEVELING HYDRAULICS PARTS AND ASSEMBLY

REF	PART #	QTY	DESCRIPTION	SEE SECTION
1	58239	2	HOSE ASSEMBLY - 722TC 58 08-08JS 08J9 (Cab Level (LVL) section “A” to Bulkhead)	
2	58239	2	HOSE ASSEMBLY - 722TC 59 08-08JS 08J9 (Cab Level (LVL) section “B” to Bulkhead)	
3	58239	1	HOSE ASSEMBLY - 722TC 54.5 08-08JS 08J9 (Bulkhead to Rotary Manifold Port 2)	
4	58239	1	HOSE ASSEMBLY - 722TC 51 08-08JS 08J9 (Bulkhead to Rotary Manifold Port 4)	
5	55513	2	FITTING, STRAIGHT CONNECTOR #8	
6	55380	2	FITTING, STRAIGHT - 8-12 F5OX-S	
7	20067	2	BUSHING, REDUCER - 6410-12-8	
8	58154	1	MAIN CONTROL VALVE	
10	55382	4	FITTING, BULKHEAD - 8 WETX-WLN-S	
11		1	UPPER TURNTABLE	(SEE - UP-1)
12	57269	1	TUBELINE, RM #5 TO LEVEL BULKHEAD	
13	57270	1	TUBELINE, RM #6 TO LEVEL BULKHEAD	
14	57271	1	TUBELINE, RM #4 TO LEVEL BULKHEAD	
15	57272	1	TUBELINE, RM #2 TO LEVEL BULKHEAD	
16	16360	1	ELBOW, 90 - FF1868T-0808S	
17	19126	1	ELBOW, 45 - FF2068T-0808S	
18		1	ROTARY MANIFOLD	(SEE - UP-1)

📖See referenced page for component or assembly breakdown.
✂Bulk material - order length required in feet or meters.
❑Kit or Assembly - includes all items indented underneath.

SHOVEL / FELLING HYDRAULICS ASSEMBLY, AND INSTALLATION

TL-775 SUPPY, RETURN, AND FLUSHING CIRCUITS

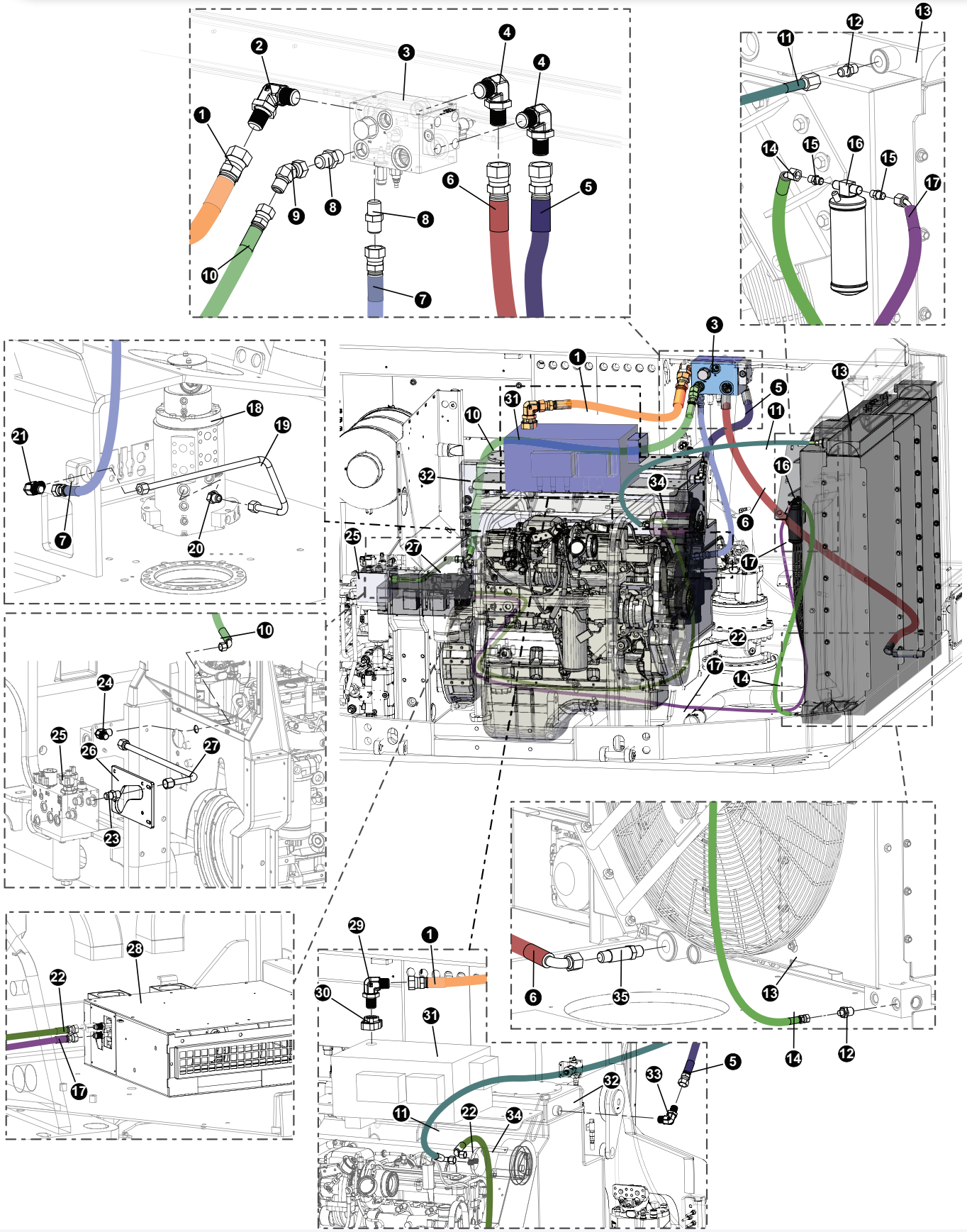

SHOVEL / FELLING HYDRAULICS ASSEMBLY, AND INSTALLATION

TL-775 SUPPY, RETURN, AND FLUSHING CIRCUITS

REF	PART #	QTY	DESCRIPTION	SEE SECTION
1	(See Description)	1	Main Contol Valve Flush Hose (Supplier Hose Part #: 187TC 40 20-20OS-20OS)	
2	50470	1	ELBOW, 90 - 849-TT0-16X20	
3		1	MANIFOLD, OIL COOLER CONTROL - D SERIES	(SEE - UP-2)
4	(See Description)	2	90 Fitting (Supplier Part #: 24-C50LOS-2404)	
5	(See Description)	1	Hydraulic Tank Flush Hose (Suppier Hose Part #: 187TC30 24-24OS-24O9)	
6	(See Description)	1	Radiator Flush Hose (Suppier Hose Part #: 187TC83 24-24O9-24OS-SW)	
7	(See Description)	1	Rotary Manifold Flush Hose (Suppier Hose Part #: 387TC47 12-JS-12OS-SW)	
8	15226	2	CONNECTOR, STR - FF1852T-1216S	
10	(See Description)	1	Engine Bulkhead/Charge Mfld Flush Hose (Suppier Hose Part #: 387TC71 12-OS-12J9-SW)	
11	(See Description)	1	(Find # on Machine (Badger Truck Kit #BK1163)	
12	(See Description)	2	Straight Fitting (Badger Truck #BK1189)	
13		1	RADIATOR / OIL COOLER - STAGE V TAIL SWING	(SEE - UP-3)
14	(See Description)	1	(Find # on Machine (Badger Truck Kit #BK1163)	
15	(See Description)	4	Straight Fitting (Badger Truck #21.31406)	
16	50937	1	DRIER, A/C - (EAGLE 24V SYSTEM)	
17	(See Description)	1	(Find # on Machine (Badger Truck Kit #BK1163)	
18		1	ROTARY MANIFOLD	(SEE - UP-1)
19	57279	1	TUBELINE, RM #7 TO FLUSH BULKHEAD	
20	15474	1	ELBOW, 45 - 6802-12	
21	54704	1	ELBOW, 90 BULK 12 WETX-WLN-S (12 JIC MM)	
22	(See Description)	1	(Find # on Machine (Badger Truck Kit #BK1163)	
23	11324	1	CONNECTOR, STR - 6400-12	
24	54704	1	ELBOW, 90 BULK 12 WETX-WLN-S (12 JIC MM)	
25		1	CHARGE MANIFOLD	(SEE - EE-1)
26	60444	1	MOUNT, MANIFOLD	
27	57931	1	TUBELINE, T2 TO BULKHEAD	
28		1	AC HEATER	(SEE - OC-4)
29	17055	1	ELBOW, 90 - FF1868T-2020S	
30	17909	1	CONNECTOR, FLANGE PAD-W46K-20-20 CODE 61	
31	58154	1	MAIN CONTROL VALVE	
32		1	HYDRAULIC TANK	(SEE - UP-2)
33	22448	1	CONNECTOR, STR - 848-TTO-24X24	
34		1	AC CONDENSER	(SEE - OC-4)
35	57498	1	VALVE, CHECK - ORIFICE GREASE SYSTEM	

SHOVEL / FELLING HYDRAULICS ASSEMBLY, AND INSTALLATION

TL-775 SUPPY, RETURN, AND FLUSHING CIRCUITS

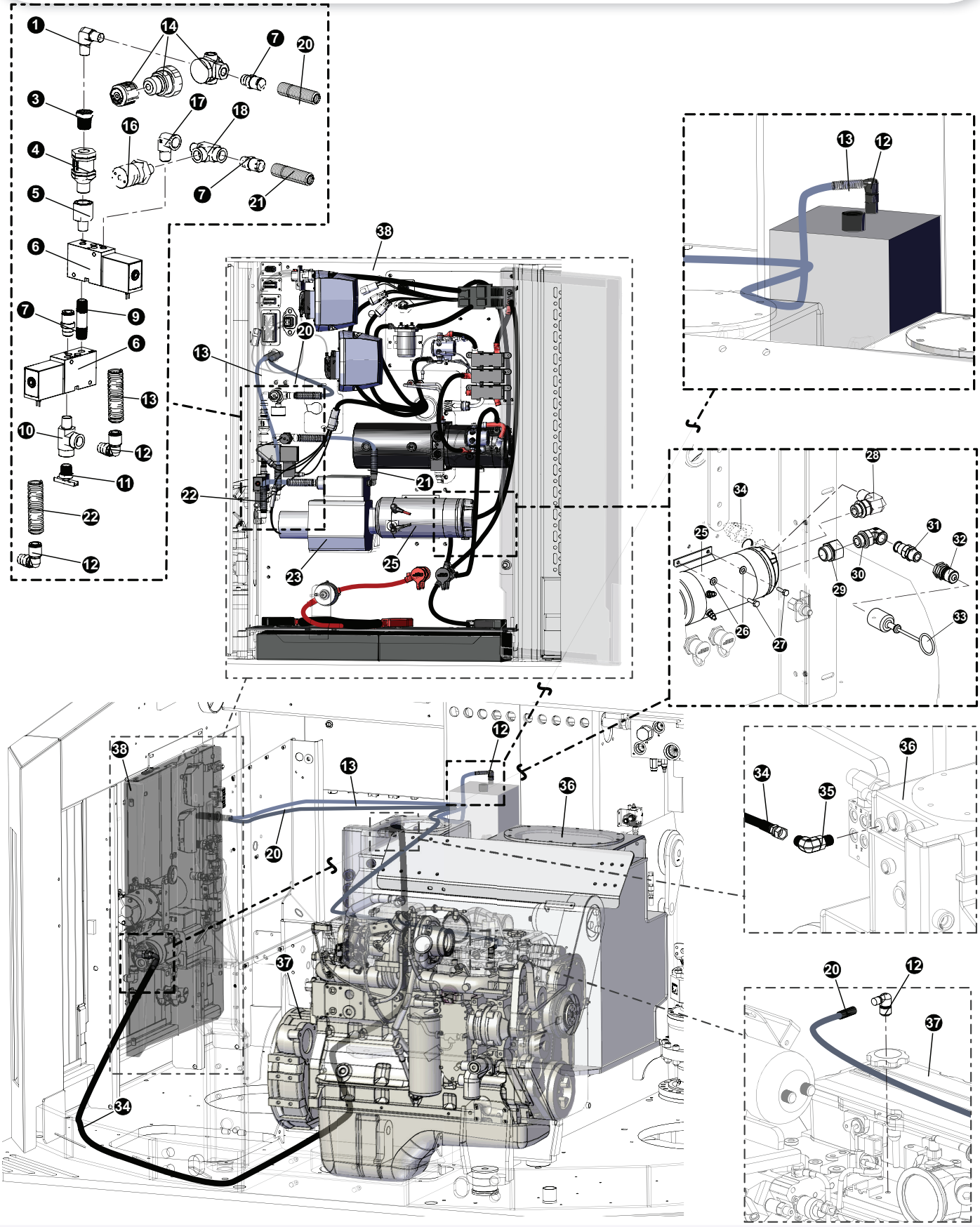

SHOVEL / FELLING HYDRAULICS ASSEMBLY, AND INSTALLATION

TL-775 SUPPY, RETURN, AND FLUSHING CIRCUITS

REF	PART #	QTY	DESCRIPTION	SEE SECTION
1	52741	1	ELBOW, MALE PIPE - 1/4 CR-S	
3	11318	1	BUSHING, REDUCER - 5406-6-4	
4	15652	1	VALVE, CHECK - HYDRAULIC/FUEL TANK	
5	52145	1	ADAPTER, EXPANDER - 3/8 X 1/4 FG-S	
6	51616	2	VALVE, VACUUM PUMP - HYD TANK	
9	16314	1	NIPPLE, PIPE - .25” X 2”	
10	10393	1	TEE - 5602-4	
11	15650	1	VALVE, TANK VENT - DC602-6	
12	51739	4	CONNECTOR, ELBOW -PUSH ON (VACUUM)	
13	51738	lin. ft	HOSE, 3/8” PUSH ON - VACUUM PUMP	
14	15649	1	REGULATOR, TURBO BOOST	
16	51737	1	SWITCH, PRESSURE - VACUUM PUMP (HYD TANK)	
17	21147	1	ELBOW, 90 STREET .25” NPT - BRASS	
18	10393	1	TEE - 5602-4	
19	52506	2	CONNECTOR, STR - PUSH HOSE 3/8 (VACUUM)	
20	51738	lin. ft	HOSE, 3/8” PUSH ON - VACUUM PUMP	
21	51738	lin. ft	HOSE, 3/8” PUSH ON - VACUUM PUMP	
22	51738	lin. ft	HOSE, 3/8” PUSH ON - VACUUM PUMP	
23		1	PUMP, VACUUM - HYD TANK	(SEE - UP-2)
25	55691	1	FILL PUMP ASSEMBLY	
26	10801	4	WASHER, FLAT - .3125”	
27	15605	4	BOLT - .3125” X .75”	
28	55712	1	FITTING, ELBOW - MALE 8-8C4OMXS	
29	55711	1	FITTING, 3/4 - 12F40HG55	
30	22383	1	ELBOW, 90 - 12 AOEG5-S	
31	54998	1	FITTING, FILL PUMP	
32	55620	1	NIPPLE, 60 SERIES - H6-63-T12	
33	55617	1	CAP, QUICK CONNECT - RUBBER (RED)	
34	(See Description)	1	Fill Pump Supply Hose (Supplier Hose Part #: 387TC 227 08-08JS-08J9L)	
35	15481	1	ELBOW, 90 - 6801-8	
36		1	HYDRAULIC TANK ASSEMBLY	(SEE - UP-1)
38	47867	1	WELDMENT, ELEC PANEL, D-MODEL	

See reference page for component or assembly breakdown.
Kit or Assembly - includes all items indented underneath.
#Sold in bulk per foot - Please specify length when ordering.

SHOVEL / FELLING HYDRAULICS ASSEMBLY, AND INSTALLATION

TL-775 IMPLEMENT PUMP - 175CC / 40 W / HP CONT

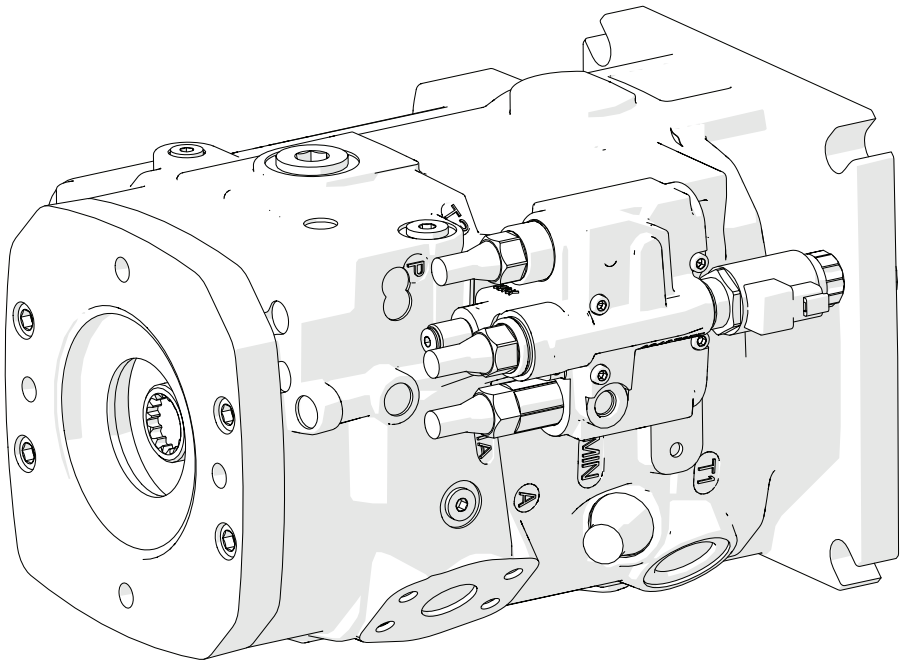

REF	PART #	QTY	DESCRIPTION	SEE SECTION
	57865	1	PUMP, IMPLEMENT - REX 175CC/40 W/HP CONT	

SHOVEL / FELLING HYDRAULICS ASSEMBLY, AND INSTALLATION

TL-77 AUXILIARY DISK SAW PUMP, HIGH PRESSURE (60CC)

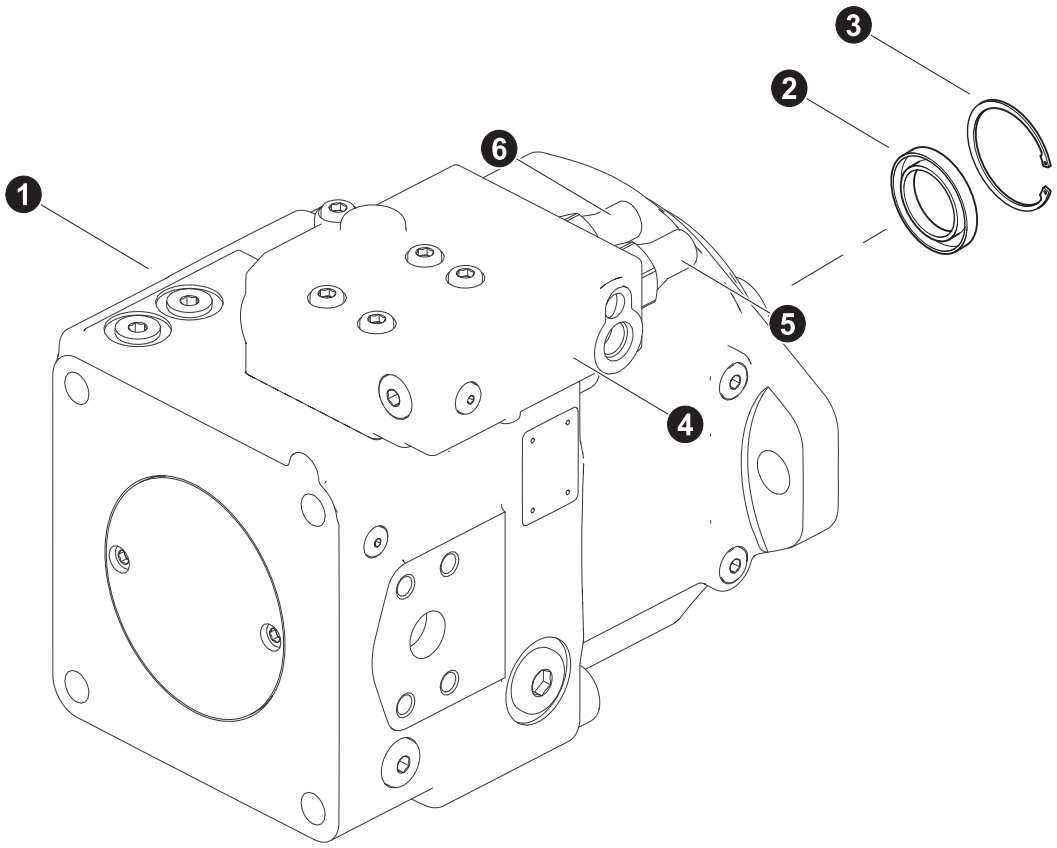

REF	PART #	QTY	DESCRIPTION	SEE SECTION
1	54523	1	□ PUMP, DISC SAW - HIGH PRESSURE (60CC)	
2	R909083416	1	RETAINING RING	
3	57451	1	SHAFT SEAL RING	
4	R909608948	1	□ CONTROLLER	
5	R909608948	1	HIGH PRESSURE	
6	R909609420	1	STANDBY	
-		1	KIT, seal repair - disc saw pump	

□ Kit or Assembly - includes all items indented underneath.

PAGE INTENTIONALLY LEFT BLANK

SECTION SBH-2
SHOVEL / FELLING HYDRAULICS ASSEMBLY AND INSTALLATION

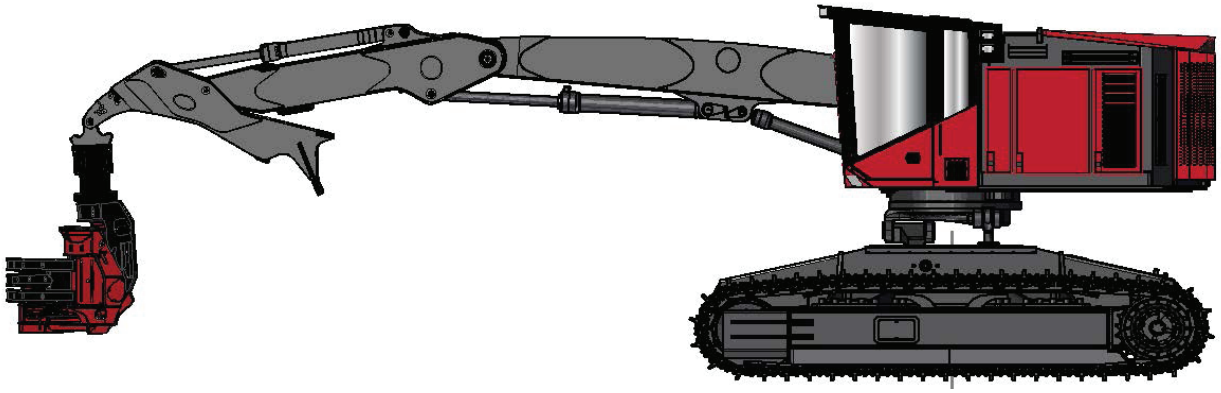

SHOVEL / FELLING HYDRAULICS ASSEMBLY AND INSTALLATION

HYDRAULIC LINES - VALVE TO MAIN BOOM

MAIN BOOM TUBELINES AS VIEWED FROM REAR OF MACHINE

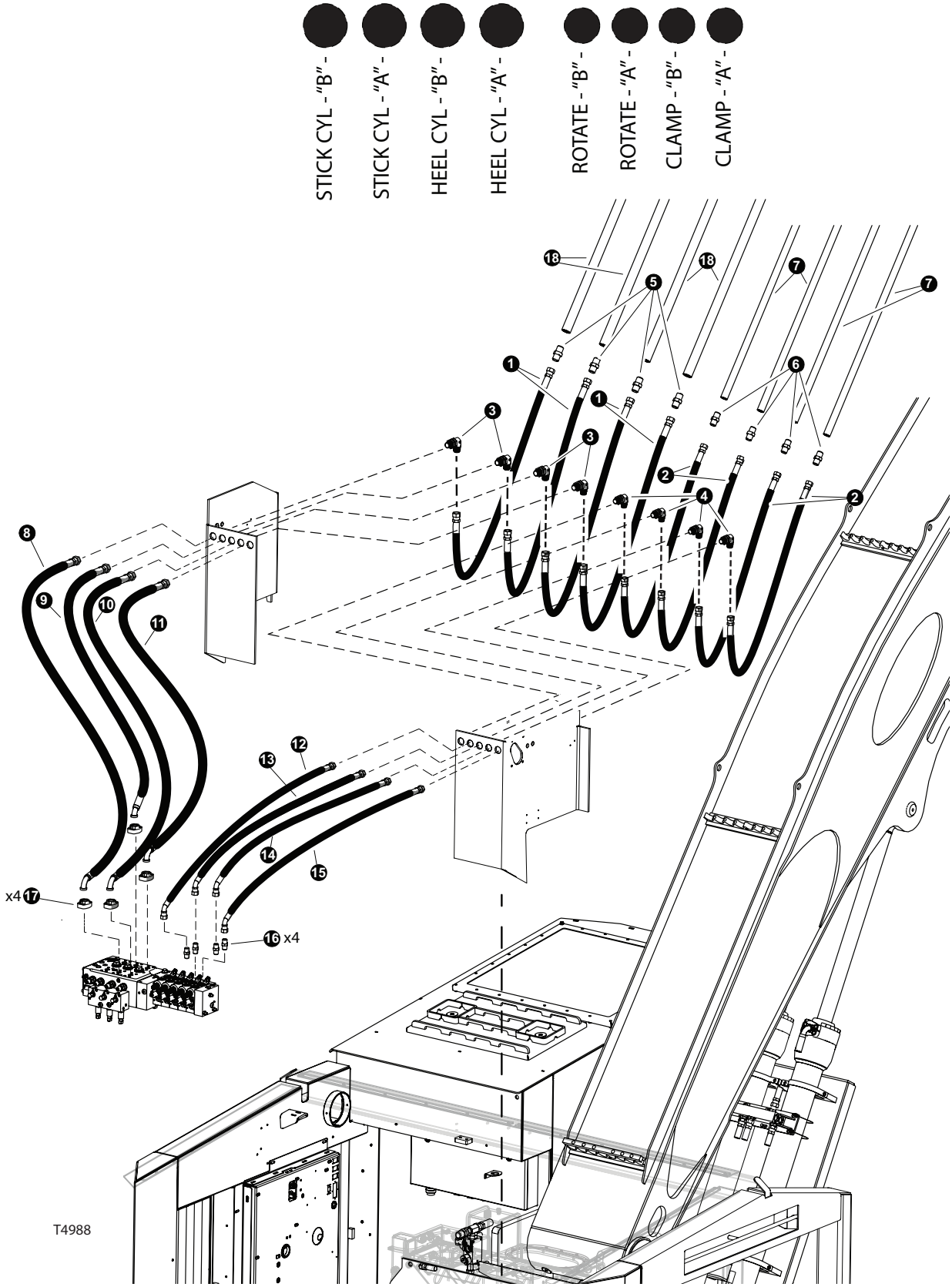

SHOVEL / FELLING HYDRAULICS ASSEMBLY AND INSTALLATION

HYDRAULIC LINES - VALVE TO MAIN BOOM

REF	PART #	QTY	DESCRIPTION	SEE SECTION
1	KIT - 58239	4	HOSE ASSEMBLY - 722TC44 16-16OS-16OS-SW (STICK “A&B” / HEEL CYL “A&B”)	
2	KIT - 58239	4	HOSE ASSEMBLY - 722TC44 12-12OS-12OS-SW (ROTATE “A&B” / CLAMP “A&B”)	
3	53680	4	FITTING, BULKHEAD UNION ELBOW 16 WELO-WN	
4	24188	4	ELBOW, 90 BULKHEAD - 855BH-TT-12	
5	16851	4	CONNECTOR, STR - FF1852T-1210S	
6	15152	4	CONNECTOR, STR - FF1852T-1212S	
7	62603	4	TUBELINE, SHOVEL-LOGGER .75” X 219.0”	
8	KIT - 58239	1	HOSE ASSEMBLY - 722TC27 16-16OS-16PH4 (STICK “B” - VALVE TO BULKHEAD)	
9	KIT - 58239	1	HOSE ASSEMBLY - 722TC21 16-16OS-16PH4 (STICK “A” - VALVE TO BULKHEAD)	
10	KIT - 58239	1	HOSE ASSEMBLY - 722TC27 16-16OS-16PH4 (HEEL “B” - VALVE TO BULKHEAD)	
11	KIT - 58239	1	HOSE ASSEMBLY - 722TC21 16-16OS-16PH4 (HEEL “A” - VALVE TO BULKHEAD)	
12	KIT - 58239	1	HOSE ASSEMBLY - 722TC46 12-12OS-12O9 (ROTATE “A” - VALVE TO BULKHEAD)	
13	KIT - 58239	1	HOSE ASSEMBLY - 722TC46 12-12OS-12O9 (ROTATE “B” - VALVE TO BULKHEAD)	
14	KIT - 58239	1	HOSE ASSEMBLY - 722TC24.5 12-12OS-12O4 (CLAMP “B” - VALVE TO BULKHEAD)	
15	KIT - 58239	1	HOSE ASSEMBLY - 722TC22 12-12OS-12O4 (CLAMP “A” - VALVE TO BULKHEAD)	
16	15152	4	CONNECTOR, STR - FF1852T-1212S	
17	15113	4	KIT, SPLIT FLANGE - 1” (CODE 62)	
18	62602	4	TUBELINE, LOG LOADER STICK .75” -	

SHOVEL / FELLING HYDRAULICS ASSEMBLY AND INSTALLATION

HYDRAULIC LINES - MAIN BOOM TO STICK BOOM

MAIN BOOM TUBELINES AS VIEWED FROM FRONT OF MACHINE

CLAMP - "A" -
CLAMP - "B" -
ROTATE - "A" -
ROTATE - "B" -
HEEL CYL - "A" -
HEEL CYL - "B" -
STICK CYL - "A" -
STICK CYL - "B" -

STICK BOOM TUBELINES AS VIEWED FROM FRONT OF MACHINE

CLAMP - "A" -
CLAMP - "B" -
ROTATE - "A" -
ROTATE - "B" -

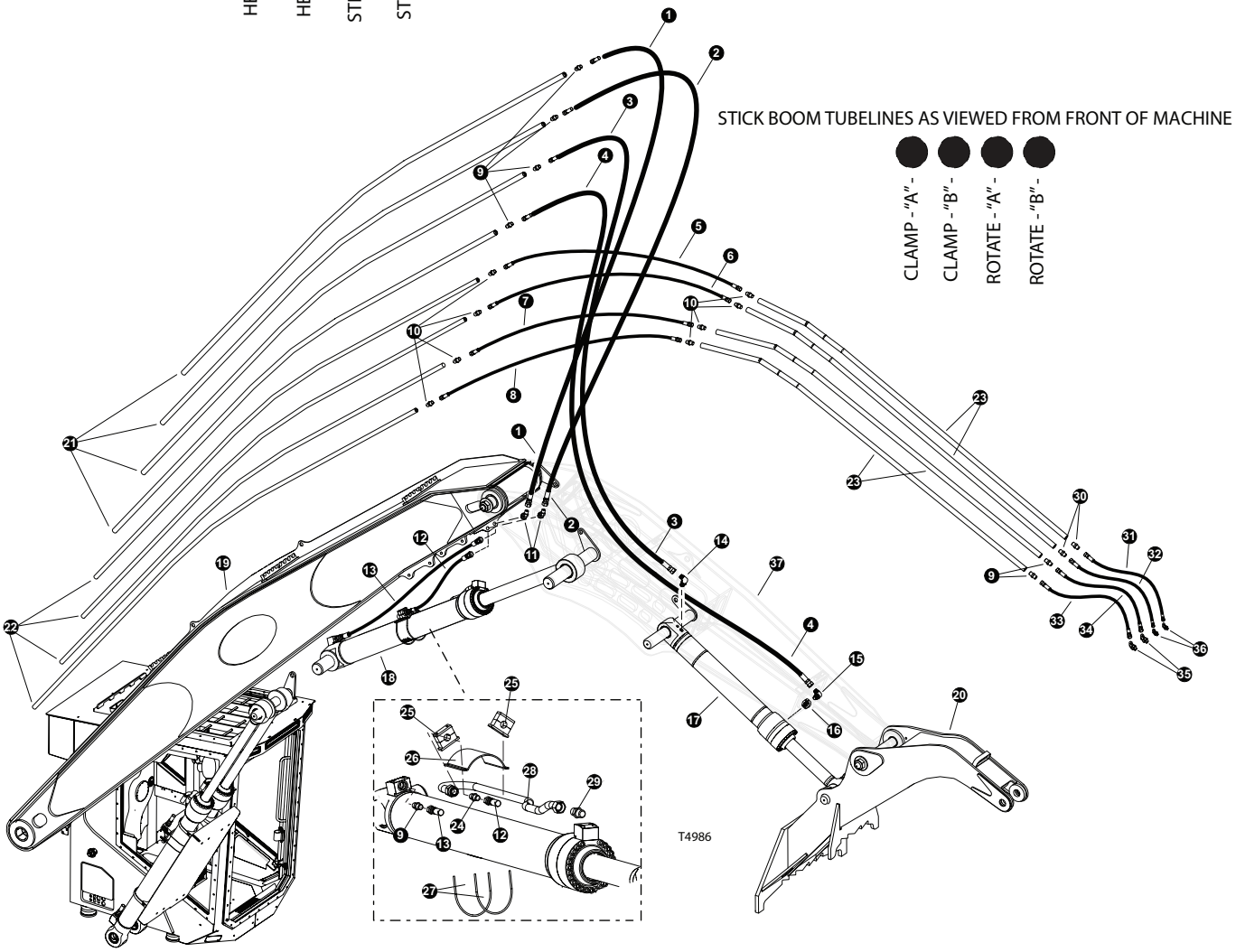

SHOVEL / FELLING HYDRAULICS ASSEMBLY AND INSTALLATION

HYDRAULIC LINES - MAIN BOOM TO STICK BOOM

REF	PART #	QTY	DESCRIPTION	SEE SECTION
1	KIT - 59050	1	HOSE ASSEMBLY - 722TC63.5 16-16OS-16OS-SW (STICK “B” BOOM TO BULKHEAD)	
2	KIT - 59050	1	HOSE ASSEMBLY - 722TC63.5 16-16OS-16OS-SW (STICK “A” BOOM TO BULKHEAD)	
3	KIT - 59050	1	HOSE ASSEMBLY - 722TC121 16-16OS-16OS-SW (HEEL “B” BOOM TO CYL BASE)	
4	KIT - 59050	1	HOSE ASSEMBLY - 722TC170.5 16-16OS-16OS-SW (HEEL “A” BOOM TO CYL ROD)	
5	KIT - 59050	1	HOSE ASSEMBLY - 722TC64 12-12OS-12OS-SW (ROTATE “B” MAIN BOOM TO STICK BOOM)	
6	KIT - 59050	1	HOSE ASSEMBLY - 722TC64 12-12OS-12OS-SW (ROTATE “A” MAIN BOOM TO STICK BOOM)	
7	KIT - 59050	1	HOSE ASSEMBLY - 722TC65.5 12-12OS-12OS-SW (CLAMP “B” MAIN BOOM TO STICK BOOM)	
8	KIT - 59050	1	HOSE ASSEMBLY - 722TC65.5 12-12OS-12OS-SW (CLAMP “A” MAIN BOOM TO STICK BOOM)	
9	11303	7	CONNECTOR, STR - 2404-16-16	
10	15226	8	CONNECTOR, STR - FF1852T-1216S	
11	54316	2	ELBOW, BULKHEAD UNION 45DEG #16	
12	KIT - 59050	1	HOSE ASSEMBLY - 722TC83 16-16OS-16OS-SW (STICK “B” - BULKHEAD TO CYL BASE)	
13	KIT - 59050	1	HOSE ASSEMBLY - 722TC83 16-16OS-16OS-SW (STICK “A” - BULKHEAD TO CYL ROD)	
14/15	15228	2	ELBOW, 90 - FF1868T-1616S	
16	17013	1	CONNECTOR, FLANGE PAD - W46K-16-16	
17	62295	1	CYLINDER, HEEL BOOM (150MM BORE - 40” ST	(SEE SB-2)
18	55464	1	CYLINDER, STICK - TL765 (6.5 INCH DIA)	(SEE SB-2)
19	62225	1	WELDMENT, MAIN BOOM SHOVEL - TL775	(SEE SB-1)
20	62291	1	WELDMENT, SHOVEL HEEL - LEVELING	
21	62602	4	TUBELINE, SHOVEL-LOGGER 1.0” X 219.0”	
22	62603	4	TUBELINE, SHOVEL-LOGGER .75” X 219.0”	
23	62636	4	TUBELINE, LL STICK 1.0” X 111.0”	
24	20455	1	CONNECTOR, REDUCER - ORS FF2281T-1620S	
25	52372	2	CLAMP, STEEL TUBELINES(WHEEL DRIVE)SMALL	
26	48481	1	PLATE	
27	48689	2	U-BOLT - 8.13 X 7 X.25	
28	57520	1	TUBELINE, STICK BOOM CYLINDER	
29	17063	1	CONNECTOR, STR - FF1852T-2016S	
30	15226	2	CONNECTOR, STR - FF1852T-1216S	
31	KIT - 59050	1	HOSE ASSEMBLY - 722TC80 08OS-08OS-SW (ROTATE “B” - STICK BOOM TO HEEL)	
32	KIT - 59050	1	HOSE ASSEMBLY - 722TC81 08OS-08OS-SW (ROTATE “A” - STICK BOOM TO HEEL)	
33	KIT - 59050	1	HOSE ASSEMBLY - 722TC78 12-12OS-12OS-SW (CLAMP “A” - STICK BOOM TO HEEL)	
34	KIT - 59050	1	HOSE ASSEMBLY - 722TC77 12-12OS-12OS-SW (CLAMP “B” - STICK BOOM TO HEEL)	
35	24188	2	ELBOW, 90 BULKHEAD - 855BH-TT-12	
36	24187	2	ELBOW, 90 BULKHEAD - 855BH-TT-08	
37	62240	1	WELDMENT, STICK BOOM LVELING SHOVEL	(SEE SB-1)

SHOVEL / FELLING HYDRAULICS ASSEMBLY AND INSTALLATION

MAIN BOOM CYLINDER HYDRAULICS PARTS AND ASSEMBLY

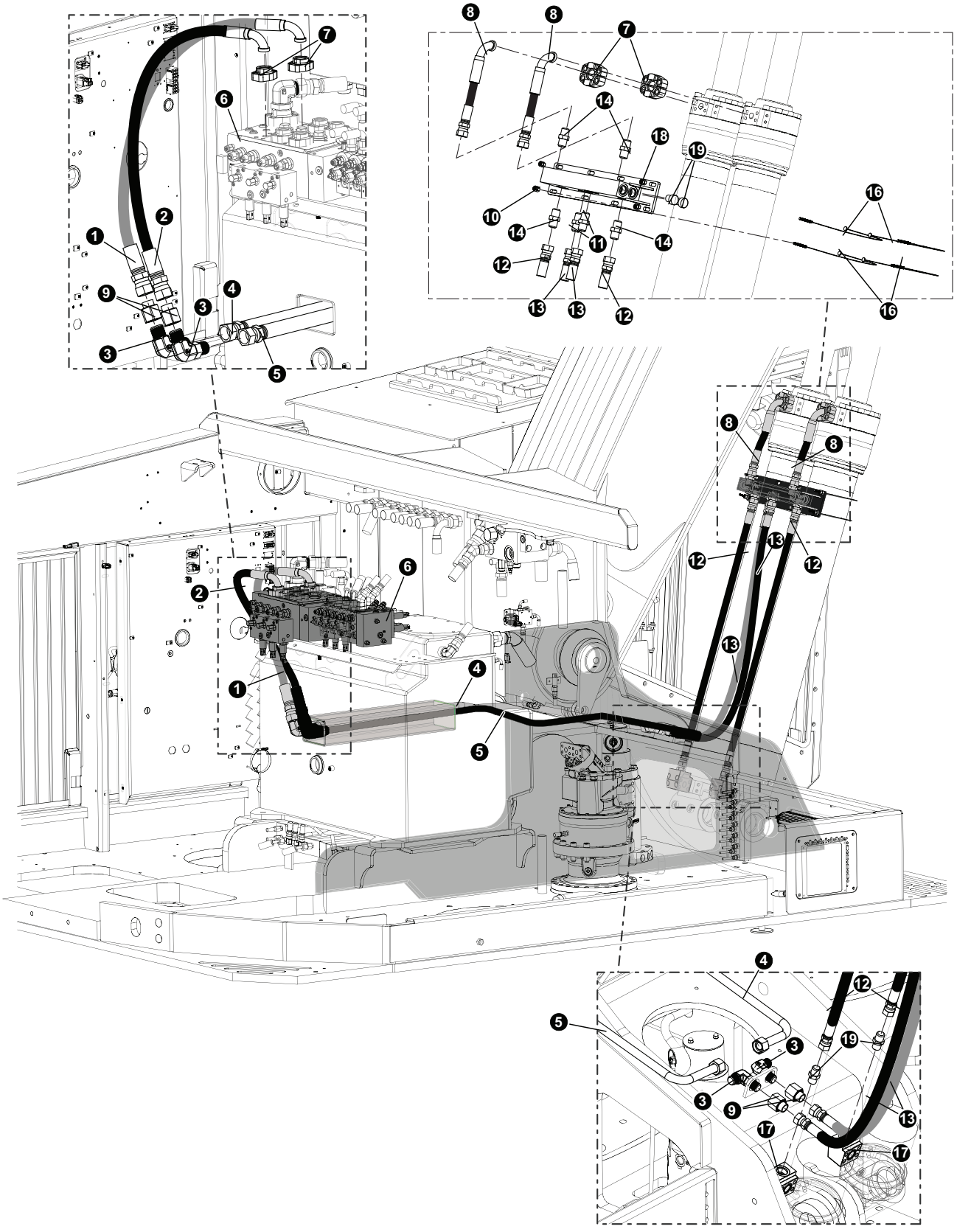

SHOVEL / FELLING HYDRAULICS ASSEMBLY AND INSTALLATION

MAIN BOOM CYLINDER HYDRAULICS PARTS AND ASSEMBLY

REF	PART #	QTY	DESCRIPTION	SEE SECTION
1	58239 (Kit #)	1	HOSE ASSEMBLY - P# 722TC38.5 16-16OS-16PH9 (Control Valve to Boom Cylinder Tube)	
2	58239 (Kit #)	1	HOSE ASSEMBLY - P# 722TC37 16-16OS-16PH9 (Control Valve to Boom Cylinder Tube)	
3	52429	4	ELBOW, 90 BULKHEAD - #20 WELO-WLNL-S	
4	57260	1	TUBELINE, MC BULKHEAD TO MC BULKHEAD	
5	57282	1	TUBELINE, MC BULKHEAD TO MC BULKHEAD	
6	58154	1	VALVE, MAIN - REX HARVESTER	
7	15113	4	KIT, SPLIT FLANGE - 1” (CODE 62)	
8	58239 (Kit #)	2	HOSE ASSEMBLY - P#722TC15 12-12OS-16PH9 (Main Cylinder to Cylinder Manifold)	
9	20455	4	CONNECTOR, REDUCER - ORS FF2281T-1620S	
10	55262	8	NUT, LOCK - “C” SERIES HYD TANK COVER	
11	15225	2	CONNECTOR, STR - FF1852T-1616S	
12	58179 (Kit #)	2	HOSE ASSEMBLY - P#722TC41 12-12OS-12OS-SW (Main Cylinder to Cylinder Manifold)	
13	58179 (Kit #)	2	HOSE ASSEMBLY - P#722TC54 16-16OS-16OS (Main Cylinder to Cylinder Manifold)	
14	15152	4	CONNECTOR, STR - FF1852T-1212S	
16	57748	4	CABLE, CYLINDER - 19” - 765	
17	57601	2	FLANGE, BLOCK ELBOW W184-16-16U CODE 62	
18	48391	1	MANIFOLD, MAIN BOOM - TL765	
19	15584	2	PLUG - 6408-HHP-12	

📖See referenced page for component or assembly breakdown.
✂Bulk material - order length required in feet or meters.
❑Kit or Assembly - includes all items indented underneath.

PAGE INTENTIONALLY LEFT BLANK

SECTION TS-1
TRACK SYSTEM ASSEMBLY AND INSTALLATION

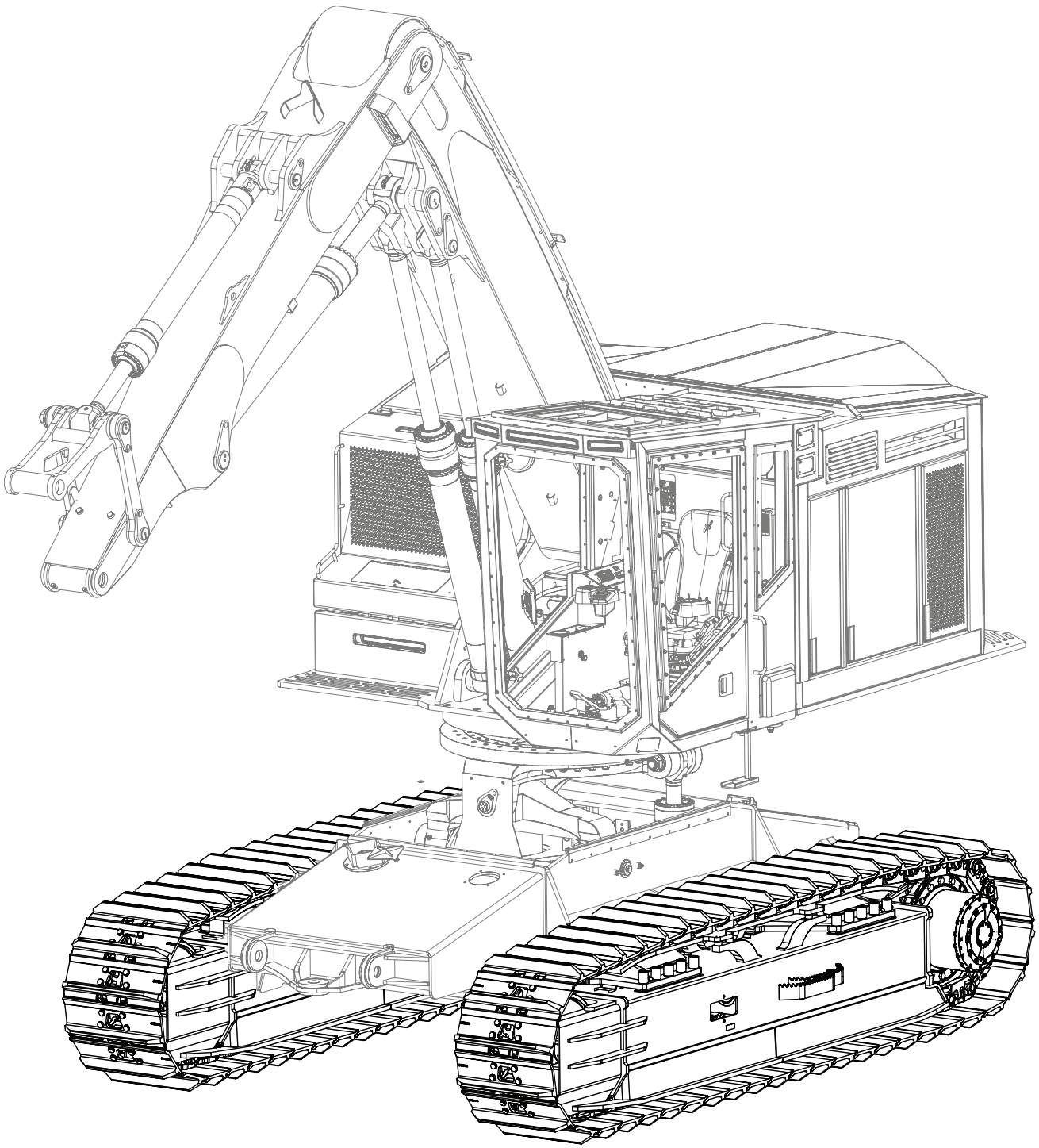

TRACK FRAME PARTS, ASSEMBLY, AND INSTALLATION

TL-775 TRACK AND BOTTOM ROLLER

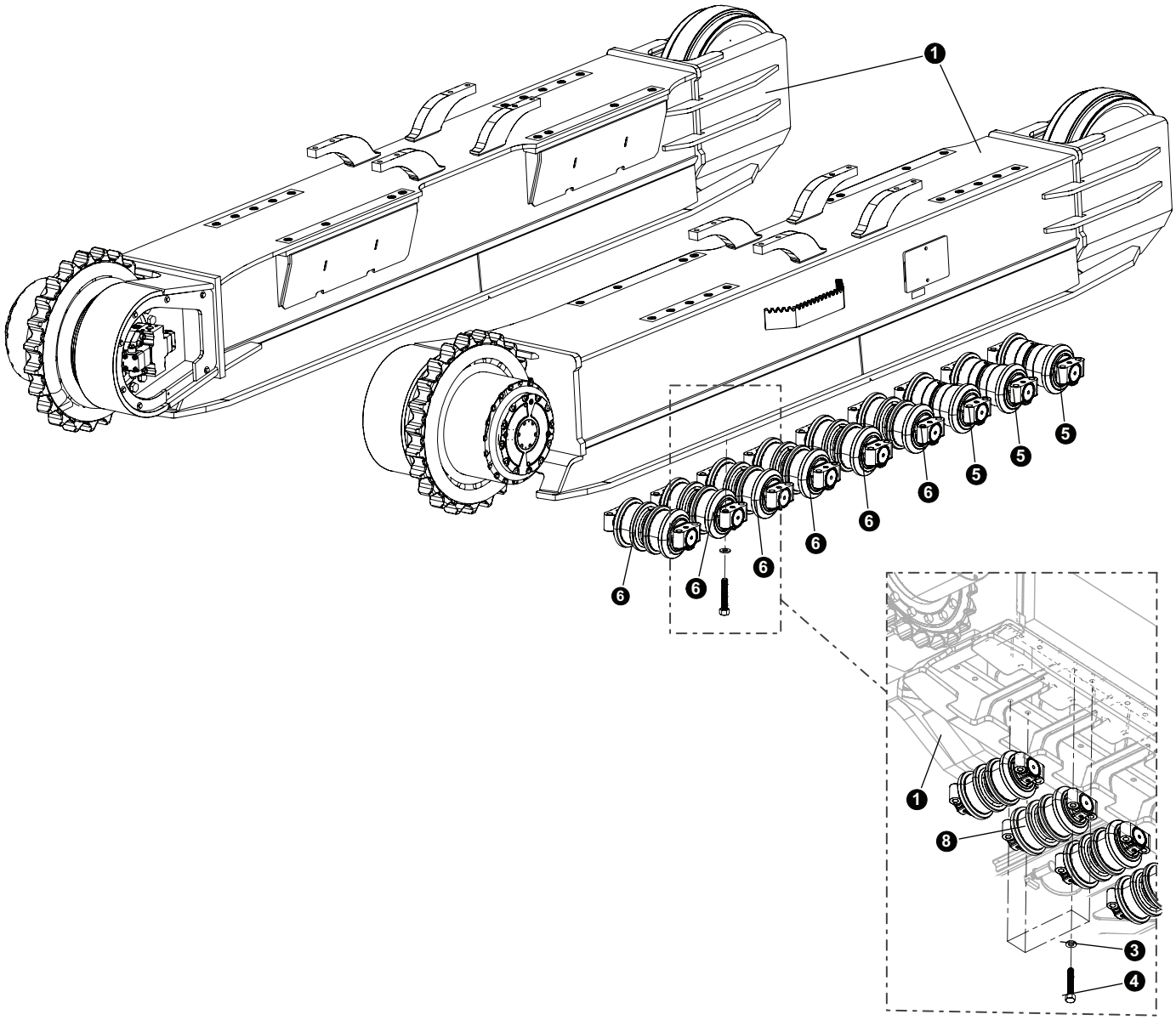

TRACK FRAME PARTS, ASSEMBLY, AND INSTALLATION

TL-775 TRACK AND BOTTOM ROLLER

SERIES SPECIFIC PARTS

REF	PART #	QTY	DESCRIPTION	SEE SECTION
1	57995	1	TRACK FRAME SET - CAT 330L/345 LONG FRAME (1 L, 1 R)	

❑Kit or Assembly - includes all items indented underneath.

NON-SERIES SPECIFIC / GENERAL PARTS

REF	PART #	QTY	DESCRIPTION	SEE SECTION
3	42110	32	WASHER, FLAT - 20MM	
4	19923	32	BOLT - 20MM-2.5P X 100MM	
5	53221	3	ROLLER, BOTTOM SINGAL FLANGE - 330	
6	53689	6	ROLLER, BOTTOM DOUBLE FLANGE - 330	

TRACK FRAME PARTS, ASSEMBLY, AND INSTALLATION

TL-775 SLIDER TRACK AND ROLLER OPTION

OPTION 1
TRACK FRAME (ITEM 1) WITH SLIDER TRACK OPTIONAL CONDITION 1

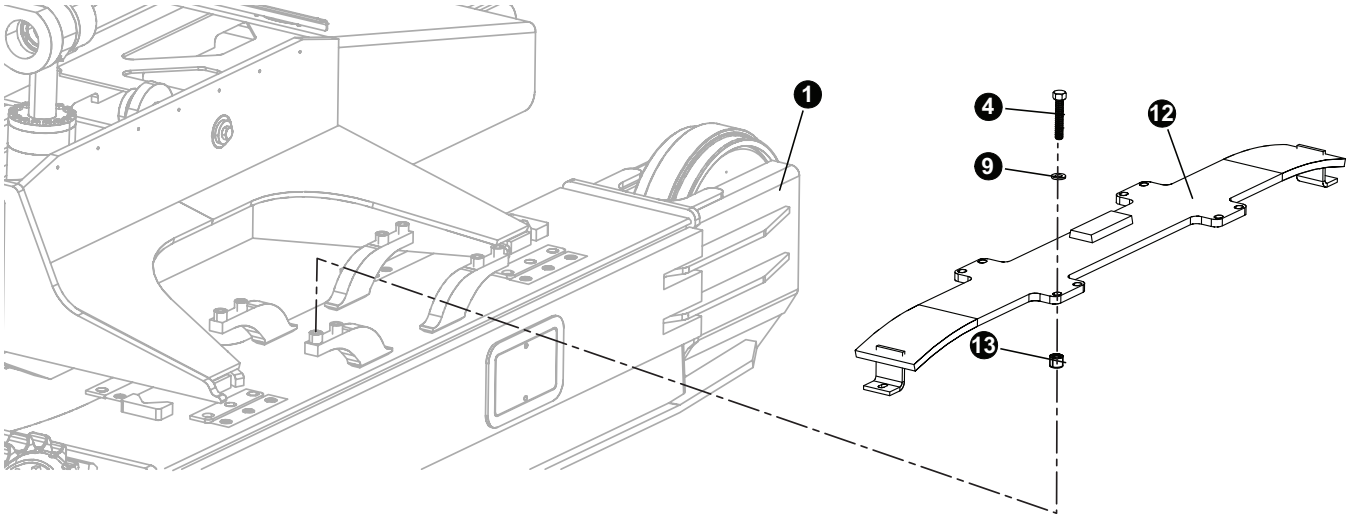

OPTION 2
TRACK FRAME (ITEM 1) WITH TOP ROLLER OPTIONAL CONITION 2

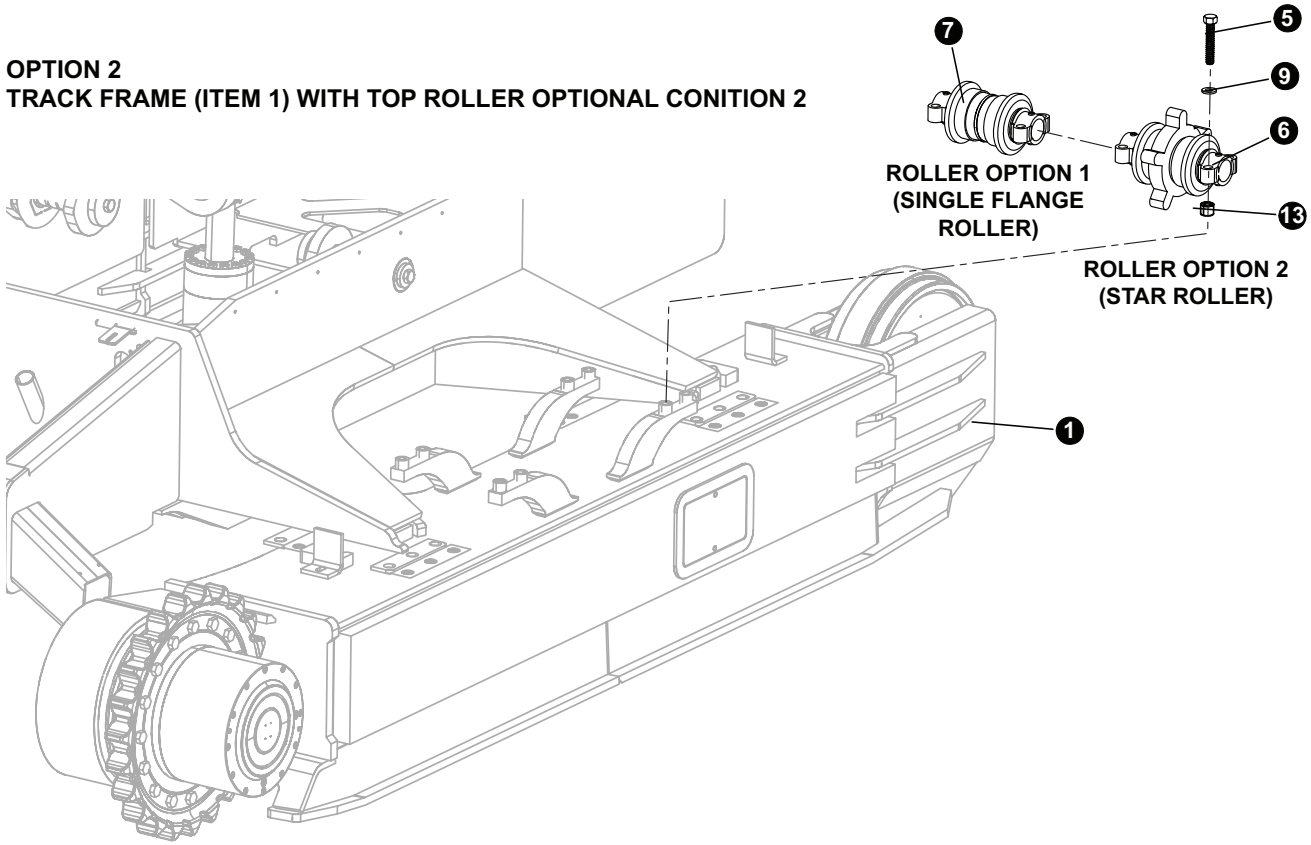

TRACK FRAME PARTS, ASSEMBLY, AND INSTALLATION

TL-775 SLIDER TRACK AND ROLLER OPTION

SLIDER TRACK (OPTION 1)

REF	PART #	QTY		DESCRIPTION	SEE SECTION
1	(Click Here)	1	❑	TRACK FRAME SET - CAT 330 Long (left and right)	TS-1-2
4	18525	8 per side		BOLT - 20MM-2.5P X 50MM	
9	19926	8 per side		WASHER, BOLT - ROLLER (330)	
12	48130	1 per side		SLIDER, TRACK 11'-2" CARBODY - TL775	
13	53950	8 per side			

❑ Kit or Assembly - includes all items indented underneath.

ROLLER (OPTION 2)

REF	PART #	QTY		DESCRIPTION	SEE SECTION
1	(Click Here)	1	❑	TRACK FRAME SET - CAT 330 Long (left and right)	TS-1-2
5	19923	8		BOLT - 20MM-2.5P X 100MM	
6	53759	2		ROLLER, STAR SFLG (330) **ALL CARBODY WIDTHS**	
7	53221	2		ROLLER GP - SFLG (330) **ALL CARBODY WIDTHS**	
9	19926	8		WASHER, BOLT - ROLLER (330)	

❑ Kit or Assembly - includes all items indented underneath.

TRACK FRAME PARTS, ASSEMBLY, AND INSTALLATION

TL-775 TRACK FRAME FRONT IDLE

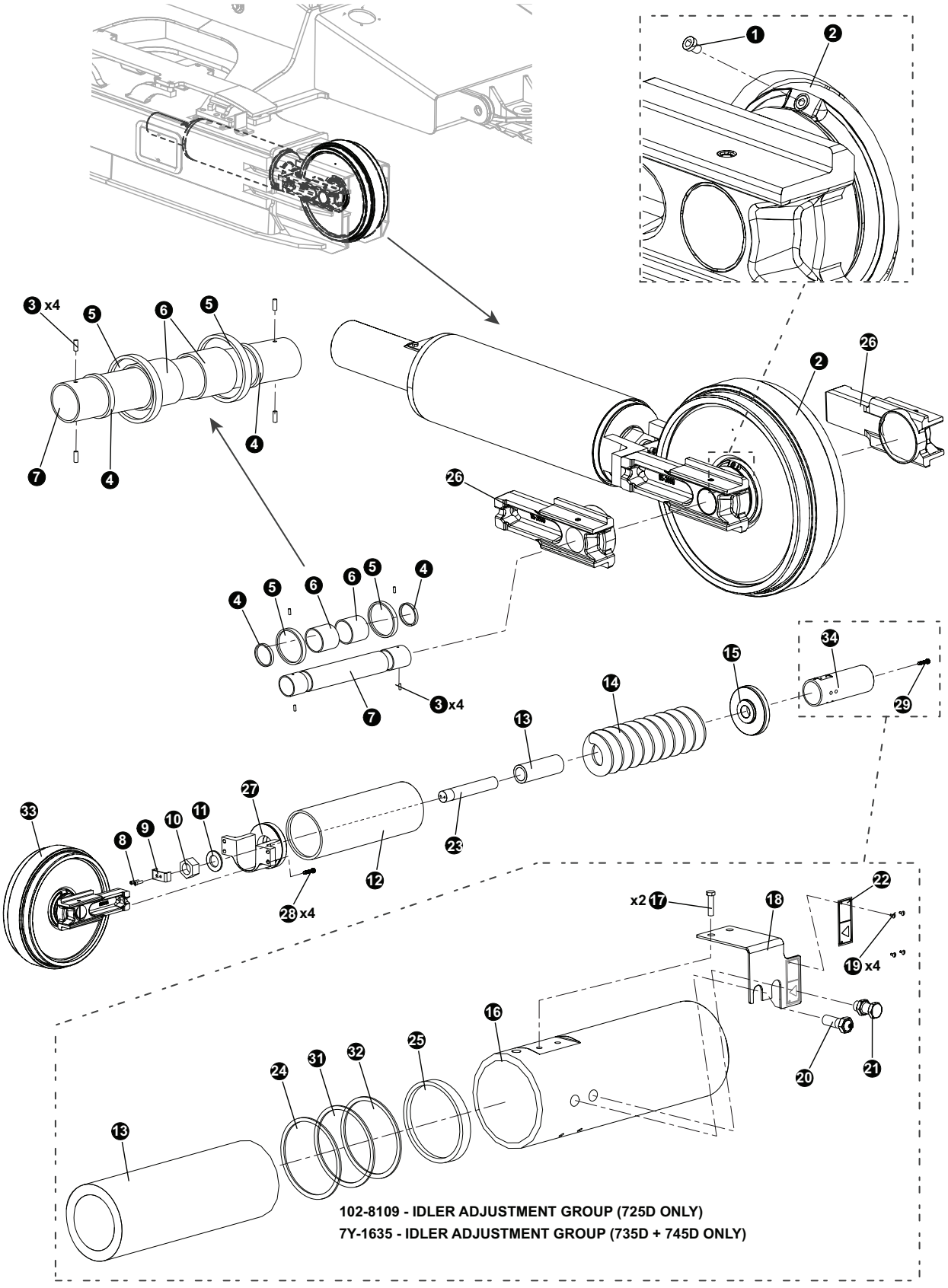

TRACK FRAME PARTS, ASSEMBLY, AND INSTALLATION

TL-775 TRACK FRAME FRONT IDLER

REF	PART #	QTY		DESCRIPTION	SEE SECTION
2	17873	1	❑	FRONT IDLER ASSEMBLY	
1	21492	1		PLUG	
3	21520	2		PIN	
4	21517	2		SEAL	
5	109-0881	2		SEAL GP	
7	21518	1		SHAFT	
8	8T-9080	2		BOLT	
9	7Y-1221	1		STRIP	
10	7Y-1460	1		NUT	
11	7Y-1459	1		WASHER	
12	7Y-1875	1		SUPPORT AS	
14	2047409_AFO	1		SPRING	
15	1156403_L5EO1	1		RETAINER, Bearing	
23	7Y-1872	1		ROD	
26	1153699	2		BEARING	
27	101-2620	1		SUPPORT	
28	21461	4		BOLT	
29	21459	2		BOLT	
33	136-3874	1		IDLER WHEEL	

7Y-1635 - IDLER ADJUSTMENT GROUP

REF	PART #	QTY		DESCRIPTION	SEE SECTION
34	7Y-1635	1	❑	IDLER ADJUSTMENT GROUP	
13	7Y-1867	1		PISTON	
16	7Y-1866	1		CYLINDER	
17	8T-4191	2		BOLT,	
18	6I-6550	1	❑	PLATE,	
19	6I-6550	4		SCREW	
22	6I-6550	1		PLATE-WARNING	
20	2S-5926	1		VATSE, relief	
21	095-2927	1		VATSE, fill	
24	7Y-1884	2		RING, back up	
25	093-1437	1		SEAL, FOAM, lip type	
31	093-1509	2		RING, back up	
32	248-7178	2		SEAL, o-ring	

❑ Kit or Assembly - includes all items indented underneath.

TRACK FRAME PARTS, ASSEMBLY, AND INSTALLATION

TL - 775 TRACK CHAIN AND PAD

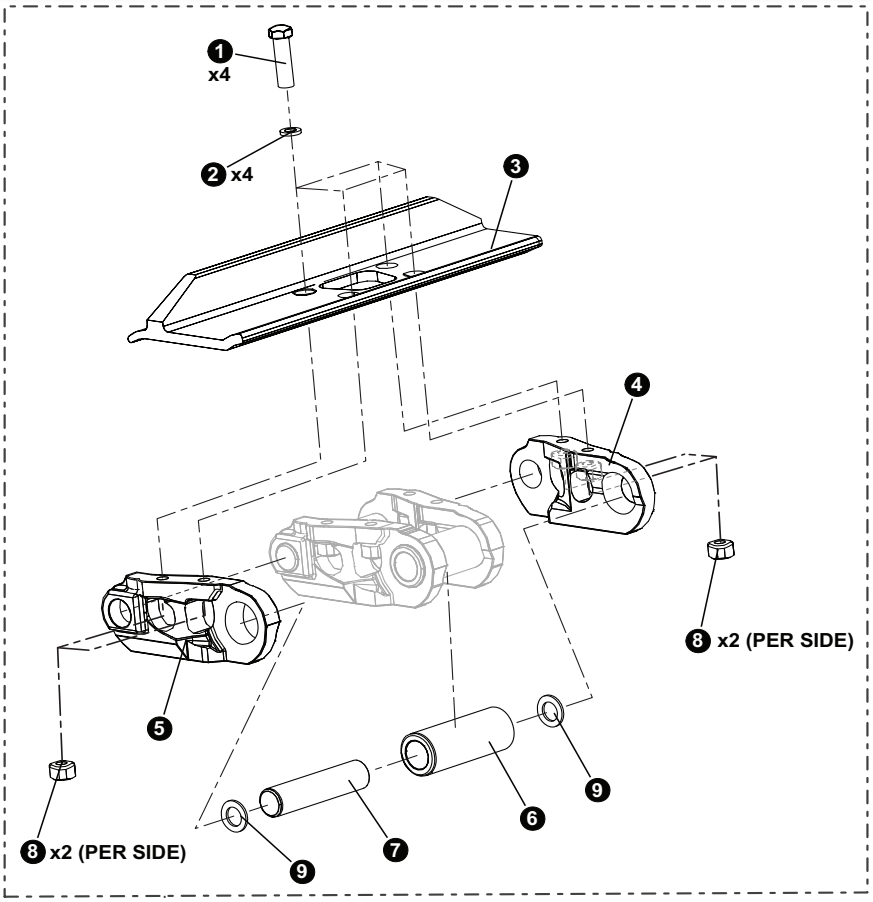

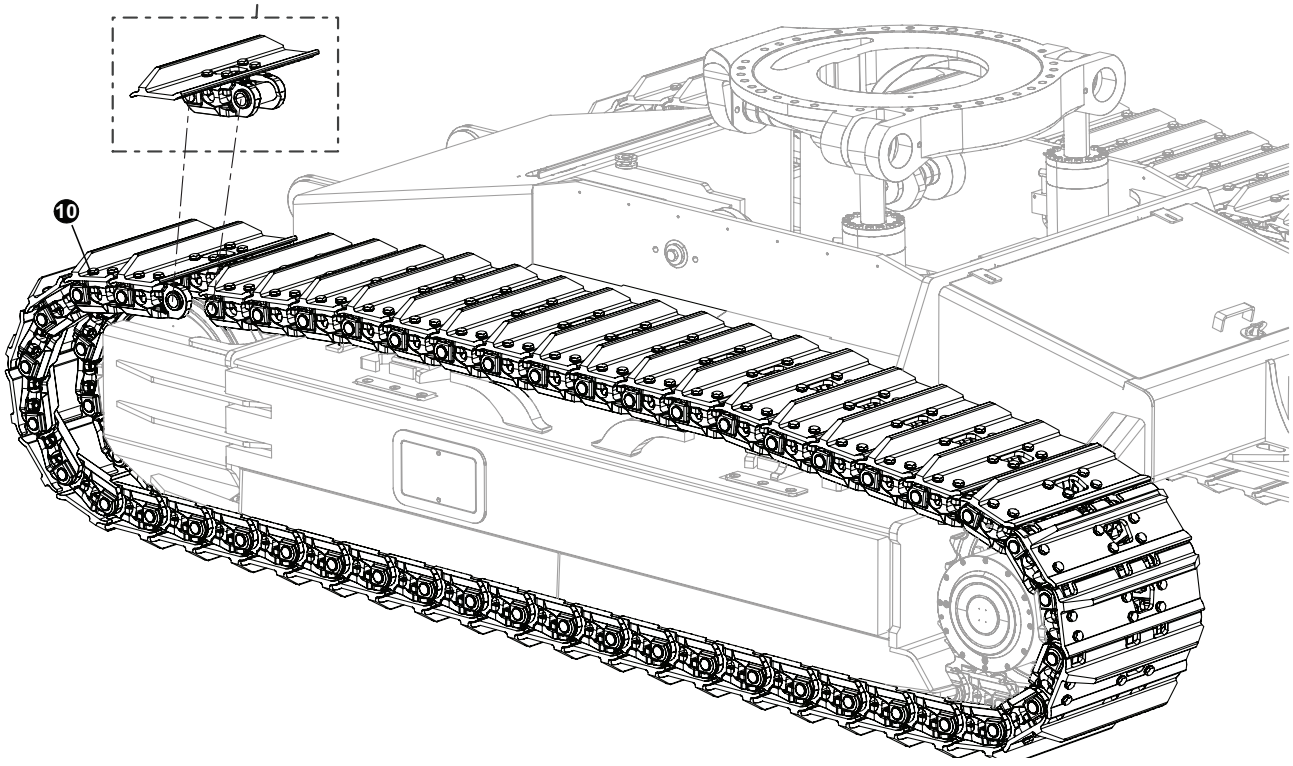

TRACK FRAME PARTS, ASSEMBLY, AND INSTALLATION

TL-775 TRACK CHAIN AND PAD

COMPLETE TRACK ASSEMBLY

REF	PART #	QTY	DESCRIPTION
10	53100	2	TRACK, RAIL W/600 SINGLE (48 LINK) D-6
10	58115	2	TRACK, RAIL W/600 SG (51 LINK) D7G HEAVY D
10	55481	2	TRACK, RAIL W/600 SINGLE D7 (48 LINKS)
10	57184	2	TRACK, RAIL W/850 TG (48 LINK) D7G HD
10	55319	2	TRACK, RAIL W/600 SG-48 LINK D7G HEAVY D

IMPORTANT

A WIDE RANGE OF OPTIONS ARE AVAILABLE FOR THE D SERIES TRACK RAIL SYSTEM. ONLY A FEW ARE LISTED HERE. CONTACT YOUR LOCAL DEALER FOR TRACK RAILS NOT LISTED.

CAT INDIVIDUAL TRACK PARTS (STANDARD TRACK)

REF	PART #	QTY	DESCRIPTION	SEE SECTION
1	18354	192	BOLT, TRACK SHOE (Torque to 300 ft lbs (400 Nm))	
3	17861	48	SHOE - 600 SINGLE	
3	21055	48	SHOE - 700 SINGLE	
4	21451	48	LINK (right)	
5	21450	48	LINK (left)	
6	201-0827	47	BUSHING,	
6	201-0828	1	BUSHING, master link	
7	21456	47	PIN,	
7	21457	1	PIN, master link	
8	17864	192	NUT, TRACK SHOE	
9	179-3426	94	SEAL, link	
9	179-3428	2	SEAL, master link	

BERCO INDIVIDUAL TRACK PARTS (STANDARD TRACK)

REF	PART #	QTY	DESCRIPTION	SEE SECTION
1	18354	192	BOLT, TRACK SHOE (Torque to 300 ft lbs (400 Nm))	
3	17861	48	SHOE - 600 SINGLE	
3	21055	48	SHOE - 700 SINGLE	
3	-TS	48	SHOE - 700 SINGLE (BERCO)	
4	21451	48	LINK (right)	
5	21450	48	LINK (left)	
6	201-0827	47	BUSHING,	
6	201-0828	1	BUSHING, master link	
7	21456	47	PIN,	
7	21457	1	PIN, master link	
8	17864	192	NUT, TRACK SHOE	
9	179-3426	94	SEAL, link	
9	179-3428	2	SEAL, master link	

TRACK FRAME PARTS, ASSEMBLY, AND INSTALLATION

TL-775 TRACK FINAL DRIVE

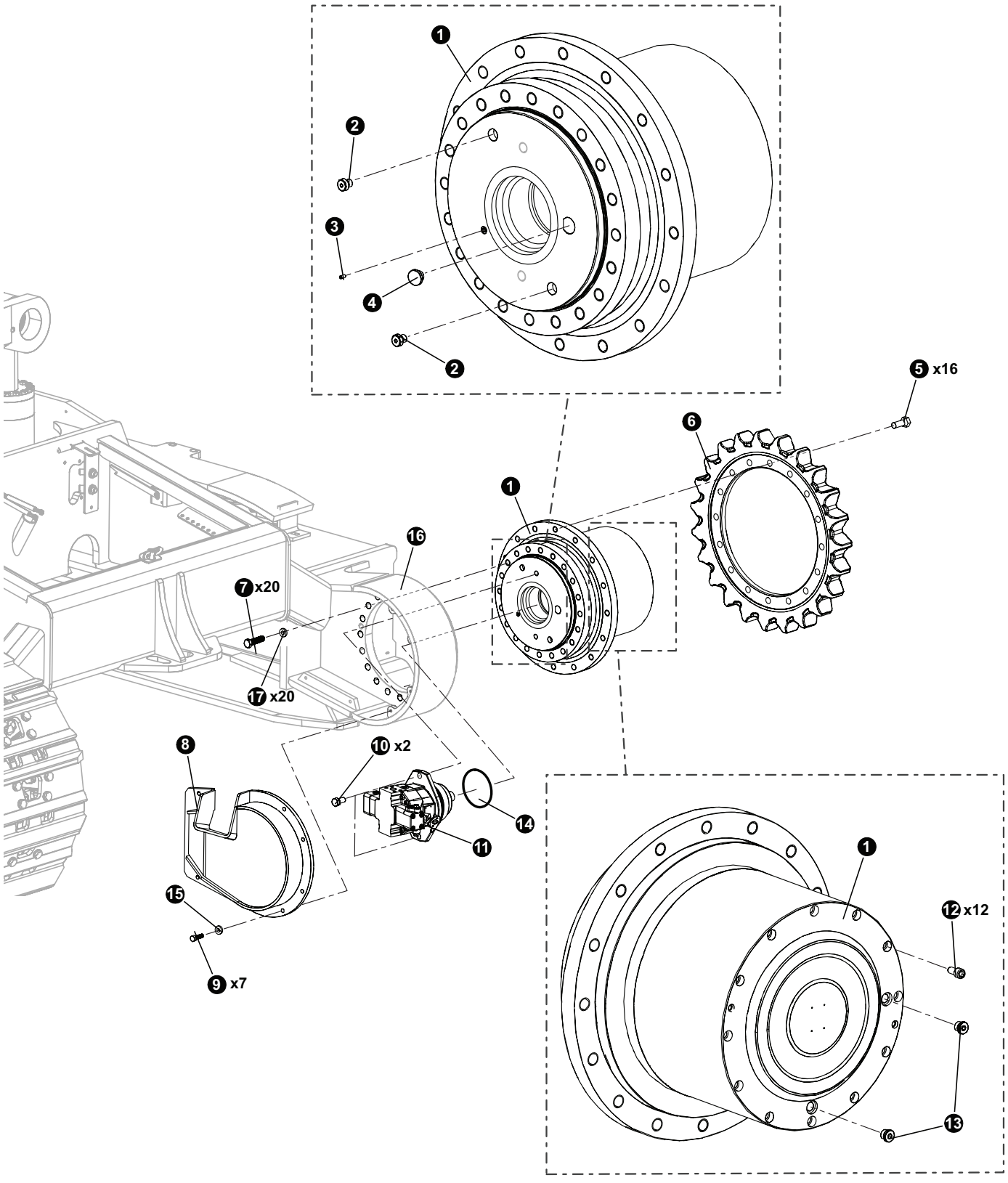

TRACK FRAME PARTS, ASSEMBLY, AND INSTALLATION

TL-775 TRACK FINAL DRIVE

REF	PART #	QTY	DESCRIPTION	SEE SECTION
1	(Click Here)	1	FINAL DRIVE ASSEMBLY	TS-1-12
5	21444	16	BOLT - 24MM (Torque to 660 ft lbs (900 Nm)) (see NOTE below)	
6	21443	1	SPROCKET, FINAL DRVE (330)	
7	24535	20	BOLT - 24MM (Torque to 660 ft lbs (900 Nm)) (see NOTE below)	
8	17870	1	COVER, TRACK DRIVE MOTOR - LH (T-PRO)	
8	17871	1	COVER, TRACK DRIVE MOTOR - RH (T-PRO)	
9	18415	7	BOLT - 12MM-1.75P X 30MM	
10	21383	2	BOLT - (Rexroth 16441363)	
11	(Click Here)	2 📖	TRACK HYDRAULIC MOTOR	TS-1-14
14	21713	2	O-RING, Rexroth Motor, **REXROTH PART #:16463252**	
15	18735	7	WASHER, FLAT - 12MM	
16	(Click Here)	1	TRACK FRAME ASSEMBLY.	TS-1-2
17	19926	20	WASHER - HARD 24MM x 80MM (Torque 660 ft lbs (900 Nm)) (See NOTE below)	

📖 See referenced page for component or assembly breakdown.
❑ Kit or Assembly - includes all items indented underneath.

NOTE:
Use Loctite 272 (blue / medium) during installation.

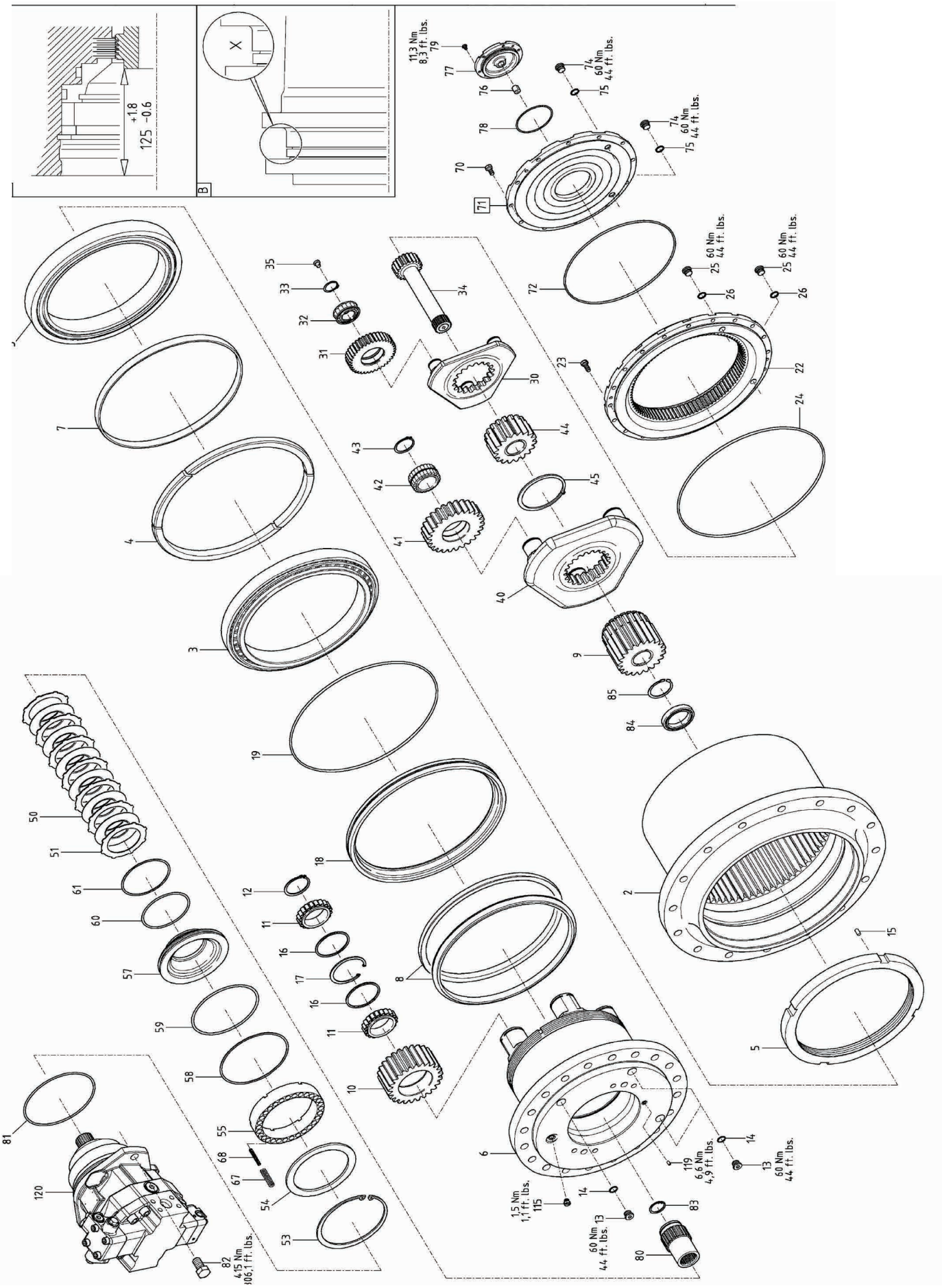
+1.8
125 -0.6
B
X
11,3 Nm
8,3 ft. lbs.
79
77
76
78
74
60 Nm
44 ft. lbs.
75
70
71
72
25
60 Nm
44 ft. lbs.
26
23
22
24
35
33
32
31
34
30
44
43
42
41
45
40
9
85
84
2
15
5
7
4
3
19
18
8
12
11
16
17
10
50
51
61
60
57
59
58
55
68
67
54
53
81
120
82
415 Nm
306,1 ft. lbs.
6
119
6,6 Nm
4,9 ft. lbs
14
13
60 Nm
44 ft. lbs.
1,5 Nm
1,1 ft. lbs.
115
83
80

TRACK FRAME PARTS, ASSEMBLY, AND INSTALLATION

TL-775 TRACK FINAL DRIVE

REF	PART #	QTY	DESCRIPTION
1	57701	1	FINAL DRIVE ASSY. - 765- . 775 GFT8190
2	R988085922	1	RING GEAR
3	R913035802	2	TAP.ROLLER BEAR.
4	R916015471	1	RING
5	R916015469	1	SHAFT NUT
6	R988085938	1	SPINDLE
7	R988084510	1	INTERMEDIATE RING
8	R916630875	1	SLIDE RING SEAL
9	R916015474	1	SUN GEAR
10	R988083532	5	PLANET GEAR
11	R916411705	10 CYL.	ROLLER BEAR.
12	R916452048	5	RETAINING RING
13	R916444172	3	SCREW PLUG
14	R916462052	3	SEAL RING
15	R916448514	2	STRAIGHT PIN
16	R916462511	10	FRICTION WASHER
17	R916452262	5	RETAINING RING
18	R988080993	1	SEAL RING
19	R913035551	1	O-RING
22	R916015483	1	RING GEAR
23	R913018213	20	HEXAGON SCREW
24	R913035551	1	O-RING
25	R916444172	2	SCREW PLUG
26	R916462052	2	SEAL RING
30	R916015481	1	PLANET CARRIER
31	R916015478	3	PLANET GEAR
32	R913036543	3	CYL. ROLLER BEAR.
33	R916452031	3	RETAINING RING
34	R916015479	1	SUN GEAR SHAFT
35	R916015537	3	SPACER PIN
40	R916015482	1	PLANET CARRIER
41	R916015477	3	PLANET GEAR
42	R916411718	3	CYL. ROLLER BEAR.
43	R916452041	3	RETAINING RING
44	R916015476	1	SUN GEAR
45	R916452076	1	RETAINING RING
50	R916103250	6	INNER DISK
51	R916015498	7	OUTER DISK
53	R916452310	1	RETAINING RING
54	R988080203	1	WASHER
55	R916015310	1	INTERMEDIATE RING
57	R988080204	1	PISTON
58	R913035482	1	THRUST RING
59	R913021152	1	O-RING
60	R913035480	1	O-RING
61	R913035483	1	THRUST RING
67	R916423336	29	COMPRESSION SPRING
68	R916423337	29	COMPRESSION SPRING
70	R900003402	12	HEXAGON SCREW
71	R916017063	1	FLANGE
72	R913021818	1	O-RING
74	R916444172	2	SCREW PLUG
75	R916462052	2	SEAL RING
76	R916930466	1	CYLINDRICAL ROLLER
77	R988081990	1	COVER
78	R909086948	1	O-RING
79	R916441100	6	HEXAGON SCREW
80	R916015473	1	CARRIER
81	R913021178	1	O-RING
82	R916441363	2	HEXAGON SCREW
83	R916452234	1	RETAINING RING
84	R913036467	1	GROOVED BALL BEAR.
85	R916452046	1	RETAINING RING
120	REF (TS)	1	AXIAL-PISTON MOTOR

❑ Kit or Assembly - includes all items indented underneath.

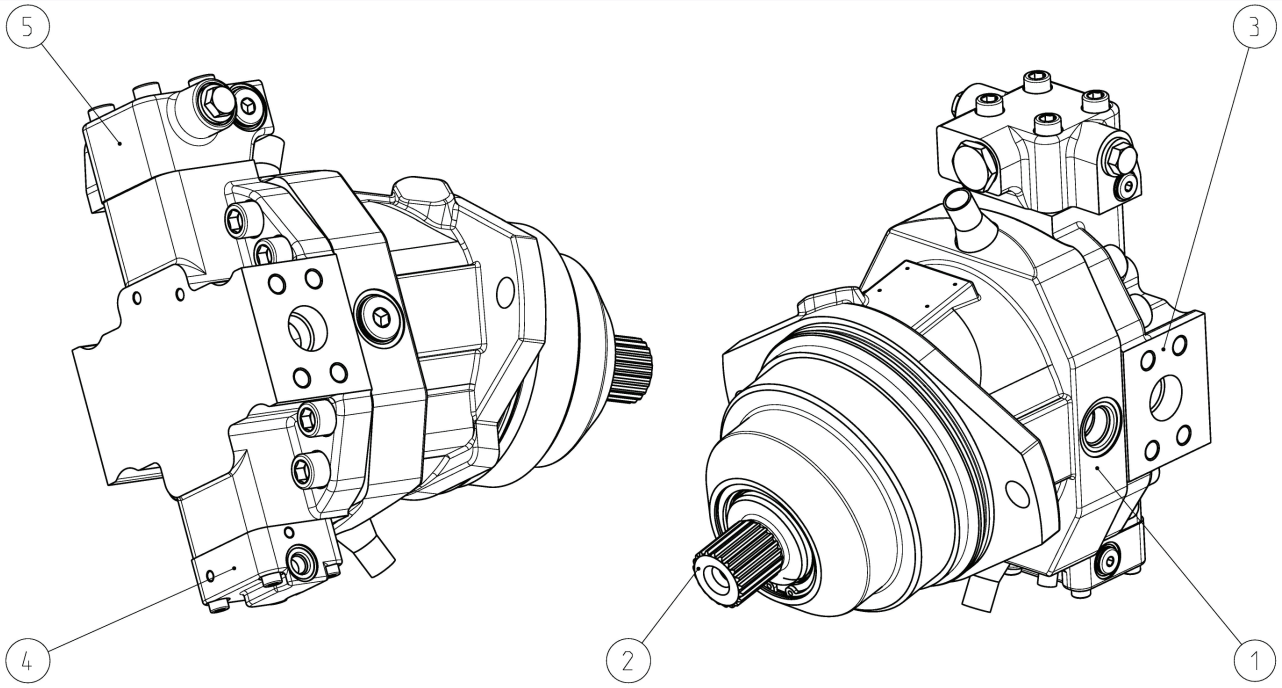

Image 2

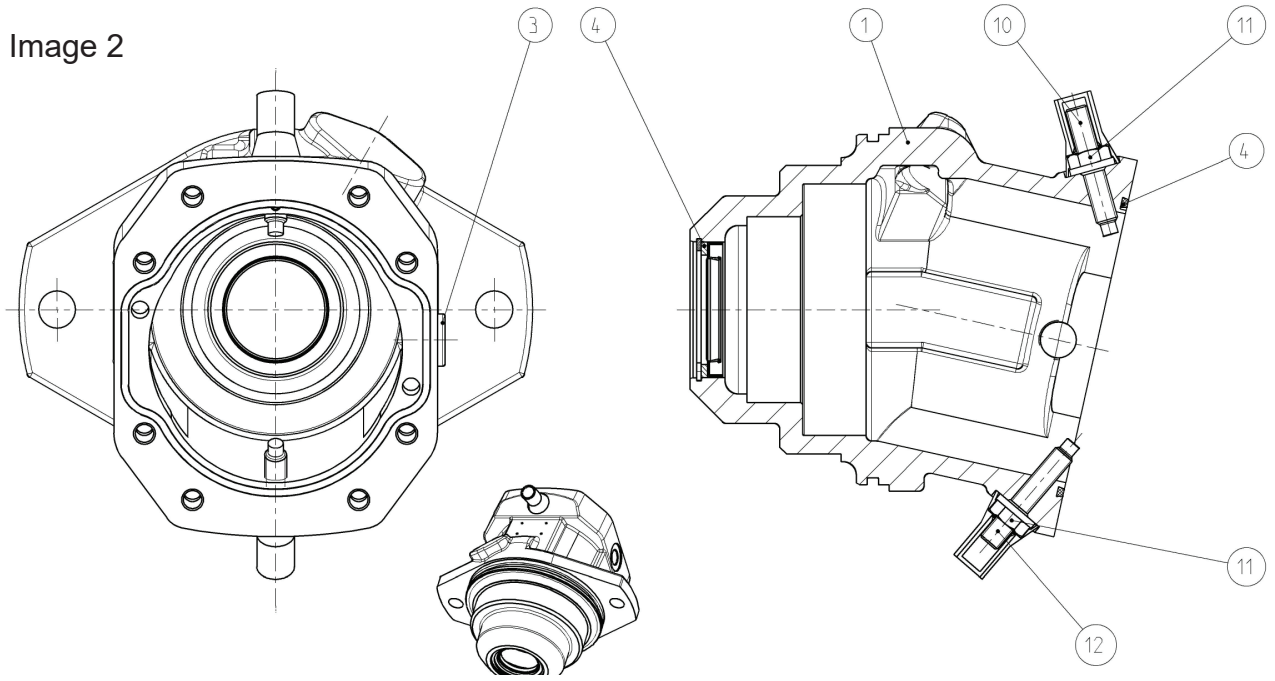

Image 3

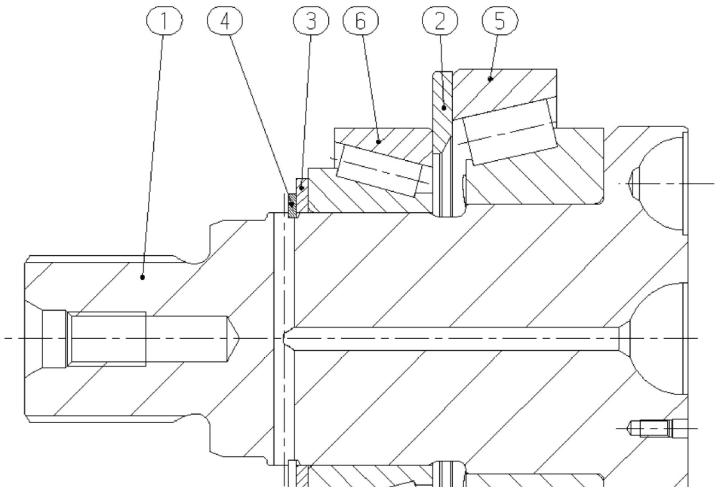

TRACK FRAME PARTS, ASSEMBLY, AND INSTALLATION

TL-775 TRACK DRIVE MOTOR ASSEMBLY

REF	PART #	QTY		DESCRIPTION	SEE SECTION
-	57702	1	❑	MOTOR, TRACK 765/775	
1	R902230275	1		HOUSING WITH ACCESSORIES	
2	R902149110	1		ROTARY GROUP	
3	R902149167	1		PORT PLATE WITH ACCESSORIES	
4	R902126908	1		CONTROL PART	
5	R902224049	1		SPUEL-U.SPEISEVEN. GMZUNS0055I6	

❑ Kit or Assembly - includes all items indented underneath.
☼ Included in seal repair kit part number-TS

REF	PART #	QTY		DESCRIPTION	SEE SECTION
-	57702	1	❑	MOTOR, TRACK 765/775	
1	R902216055	1		HOUSING	
3	R902601712	1		LOCKING SCREW	
4	R902110470	1		SEAL KIT ROTARY GROUP	
10	R909154041	1		THREADED PIN	
11	R909152459	1		SEALING NUT	
12	R909153075	1		THREADED PIN	

❑ Kit or Assembly - includes all items indented underneath.
☼ Included in seal repair kit part number-TS

REF	PART #	QTY		DESCRIPTION	SEE SECTION
-	57702	1	❑	MOTOR, TRACK 765/775	
1	R902149112	1		DRIVE SHAFT	
2	R909651524	1		SHIM	
3	R902077202	1		BACK-UP PLATE	
4	R909083369	1		RETAINING RING	
5	R909154687	1		TAPERED-ROLLER BEARING	
6	R909154688	1		TAPERED-ROLLER BEARING	

❑ Kit or Assembly - includes all items indented underneath.
☼ Included in seal repair kit part number-TS

TRACK FRAME PARTS, ASSEMBLY, AND INSTALLATION

TL-775 TRACK DRIVE MOTOR ASSEMBLY

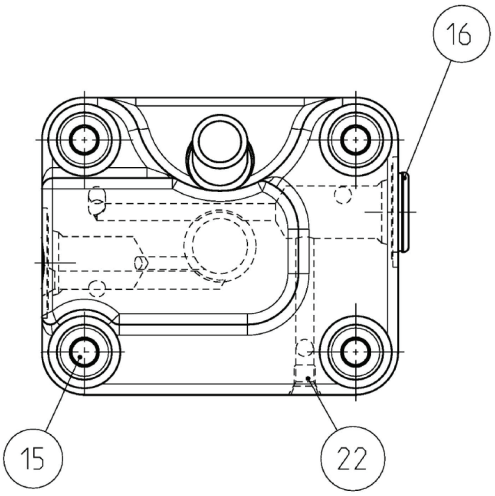

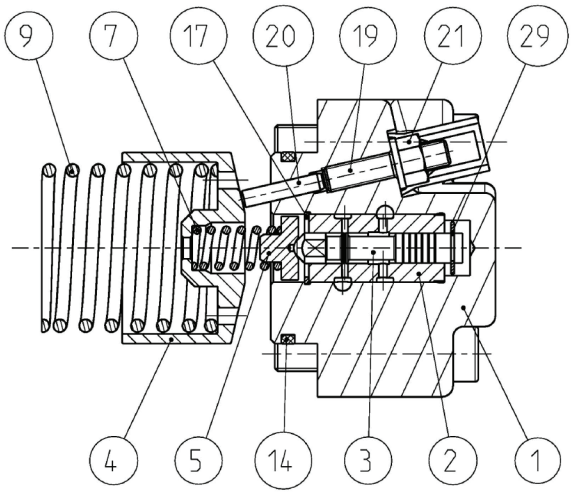

TRACK FRAME PARTS, ASSEMBLY, AND INSTALLATION

TL-775 TRACK DRIVE MOTOR ASSEMBLY

REF	PART #	QTY	DESCRIPTION	SEE SECTION
1	R902209570	1	CONTROL HOUSING	
2	R909417512	1	CONTROL BUSH	
3	R902045455	1	CONTROL PISTON	
4	R909651119	1	ADJUSTING BUSHING	
5	R909921339	1	SPRING COLLAR	
7	R909921419	1	PRESSURE SPRING	
9	R909651117	1	PRESSURE SPRING	
14	R909085560	1	O-RING 1 ST D	
15	R909830176	4	SOCKET-HEAD SCREW	
16	R909831482	1	LOCKING SCREW	
17	R909083381	1	RETAINING RING	
19	R909152427	1	THREADED PIN	
20	R909087165	1	CYLINDER PIN	
21	R909152425	1	SEALING NUT	
22	R909831317	1	DOUBLE BREAK-OFF PLUG	
29	R909085812	1	RETAINING DISC	

❑ Kit or Assembly - includes all items indented underneath.
☼ Included in seal repair kit part number 21636-TS

TRACK FRAME PARTS, ASSEMBLY, AND INSTALLATION

TL-775 TRACK DRIVE MOTOR ASSEMBLY

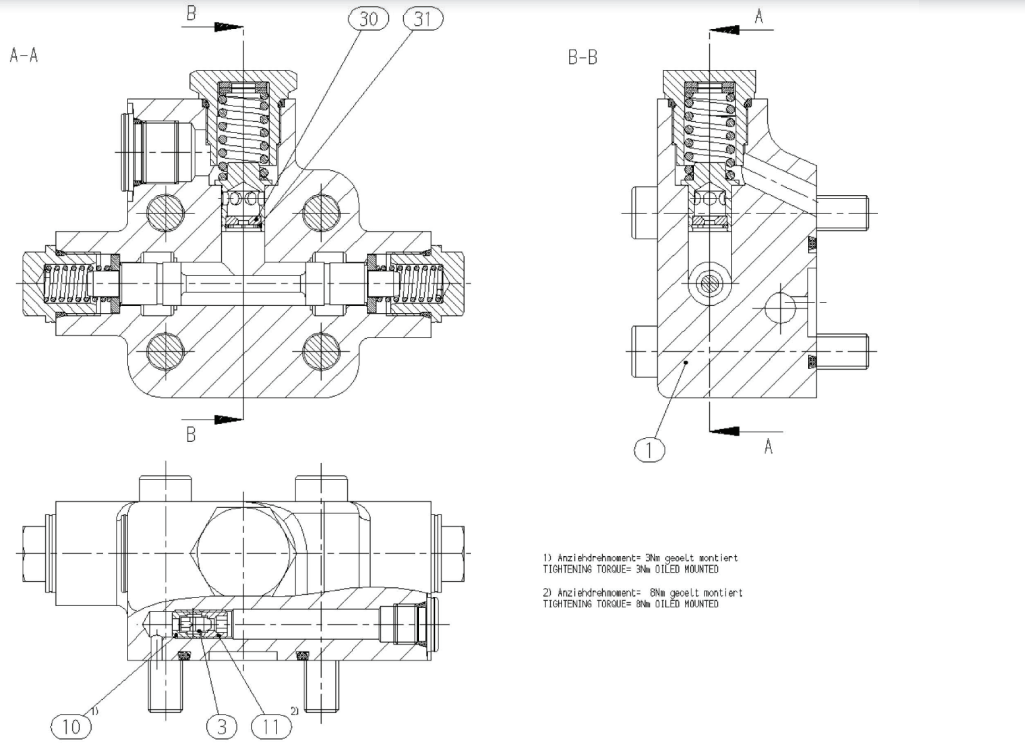

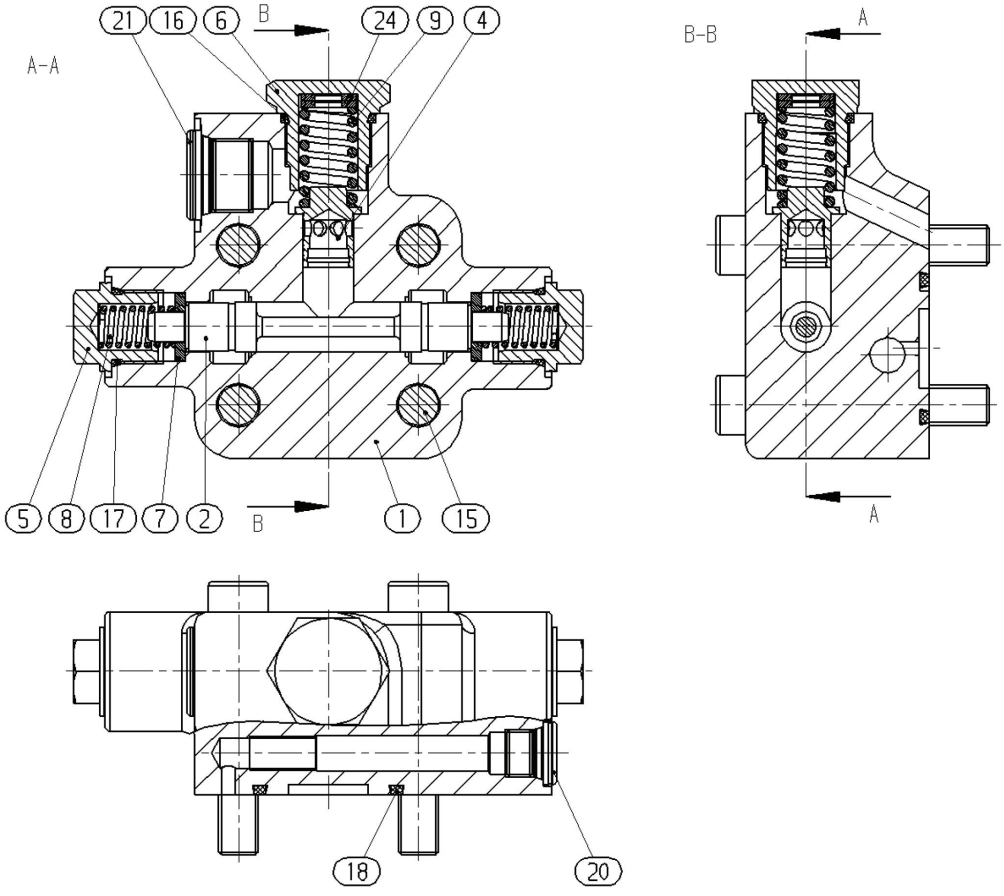

TRACK FRAME PARTS, ASSEMBLY, AND INSTALLATION

TL-775 TRACK DRIVE MOTOR ASSEMBLY

REF	PART #	QTY	DESCRIPTION	SEE SECTION
1	R902203710	1	FLUSH & BOOST PRESSURE VALVE W/O ORIF.	
3	R909425868	1	THROTTLE PIN	
10	R909400263	1	THROTTLE SCREW	
11	R909400264	1	THROTTLE SCREW	
30	R909431309	1	ORIFICE	
31	R909083379	1	RETAINING RING	

❑ Kit or Assembly - includes all items indented underneath.
☼ Included in seal repair kit part number 21636-TS

REF	PART #	QTY	DESCRIPTION	SEE SECTION
1	R902126566	1	VALVE HOUSING	
2	R902119990	1	FLUSHING PISTON	
4	R902134982	1	VALVE PISTON	
5	R902163788	2	LOCKING SCREW	
6	R909435052	1	LOCKING SCREW	
7	R902182251	2	SHIM	
8	R902200059	2	PRESSURE SPRING	
9	R909078142	1	PRESSURE SPRING	
15	R909083099	4	SOCKET-HEAD SCREW	
16	R909152694	1	O-RING	
17	R902600738	2	O-RING	
18	R909154053	1	O-RING	
20	R909831482	1	LOCKING SCREW	

❑ Kit or Assembly - includes all items indented underneath.
☼ Included in seal repair kit part number 21636-TS

PAGE INTENTIONALLY LEFT BLANK

LEVELING OPTION ASSEMBLY AND INSTALLATION

TL-775 FRAME AND TRACK ASSEMBLY

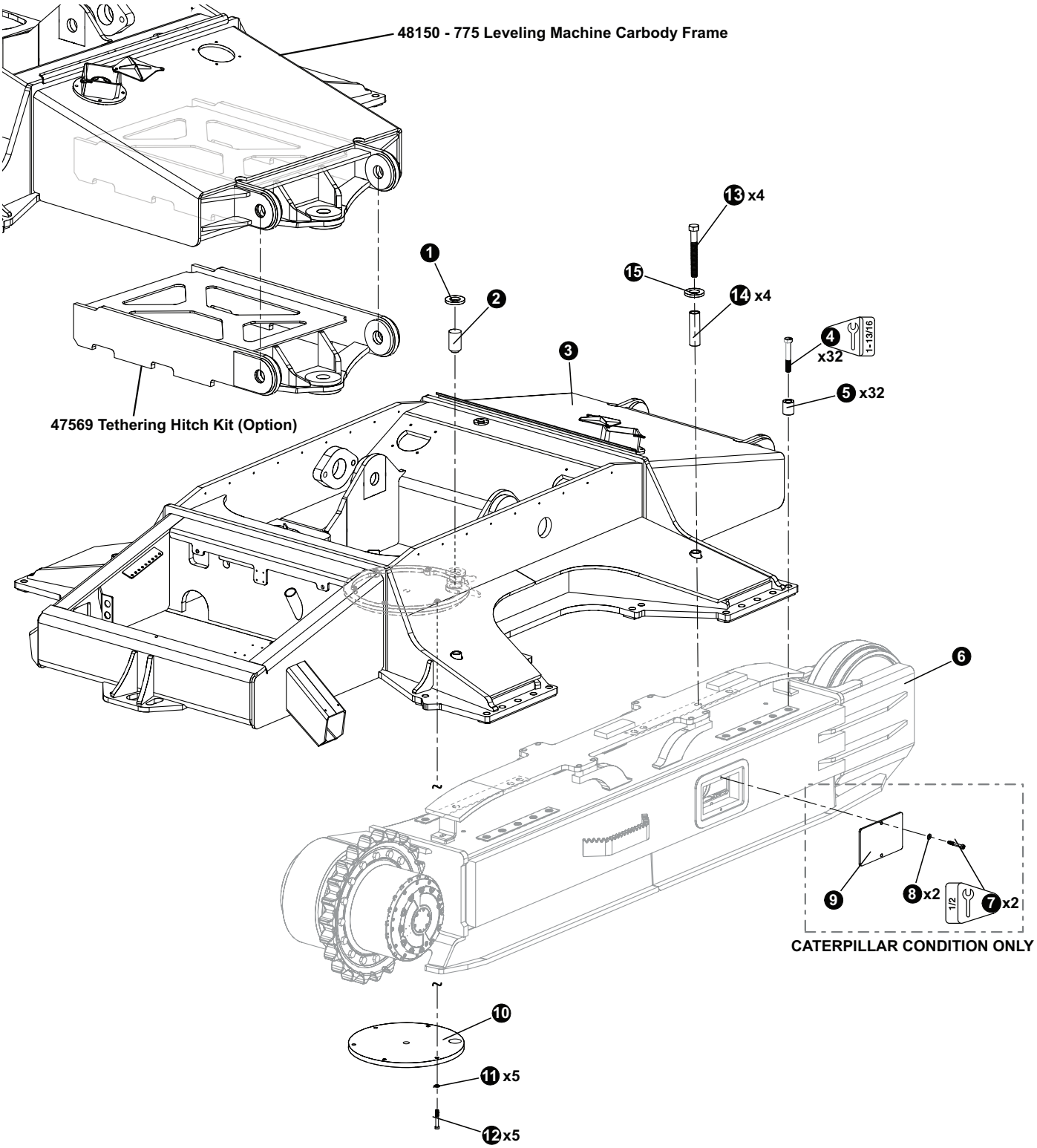

LEVELING OPTION ASSEMBLY AND INSTALLATION

TL-775 FRAME AND TRACK ASSEMBLY

REF	PART #	QTY	DESCRIPTION	SEE SECTION
1	12021	1	WASHER, BURNED	
2	43290	1	SHAFT, PIVOT	
3	48150	1	WELDMENT, TL765 CAR BODY COMPLETE (**Specify if carbody is to include 47569 Tethering Hitch Kit** - See illustration for Tethring Kit)	
4	53139	32	BOLT - 30MM-3.5 X 140MM 12.9 (Torque to 1000 ft lbs - 1355 Nm)	
5	12464	32	SPACER, BOLT - CARBODY	
6	REF.	1	TRACK FRAME ASSEMBLY	TS-1
7	15551	4	BOLT - 12MM-1.75P X 40MM	
8	15534	4	WASHER, SAE FLAT - .5”	
9	54134	2	COVER, TRACK COUNTERWEIGHT	
10	43739	1	PLATE, COVER BOTTOM 11’-2”	
11	10805	5	WASHER, FLAT - .625”	
12	15517	5	BOLT - .625” X 2.5”	
13	(See Description)	4	BOLT - M30 X 248mm (Part #: 1505529)	
14	48147	4	SPACER, TRACK BOLT - TAIL	
15	23211	4	WASHER, SAE FLAT - 1.125” (EXTRA THICK)	

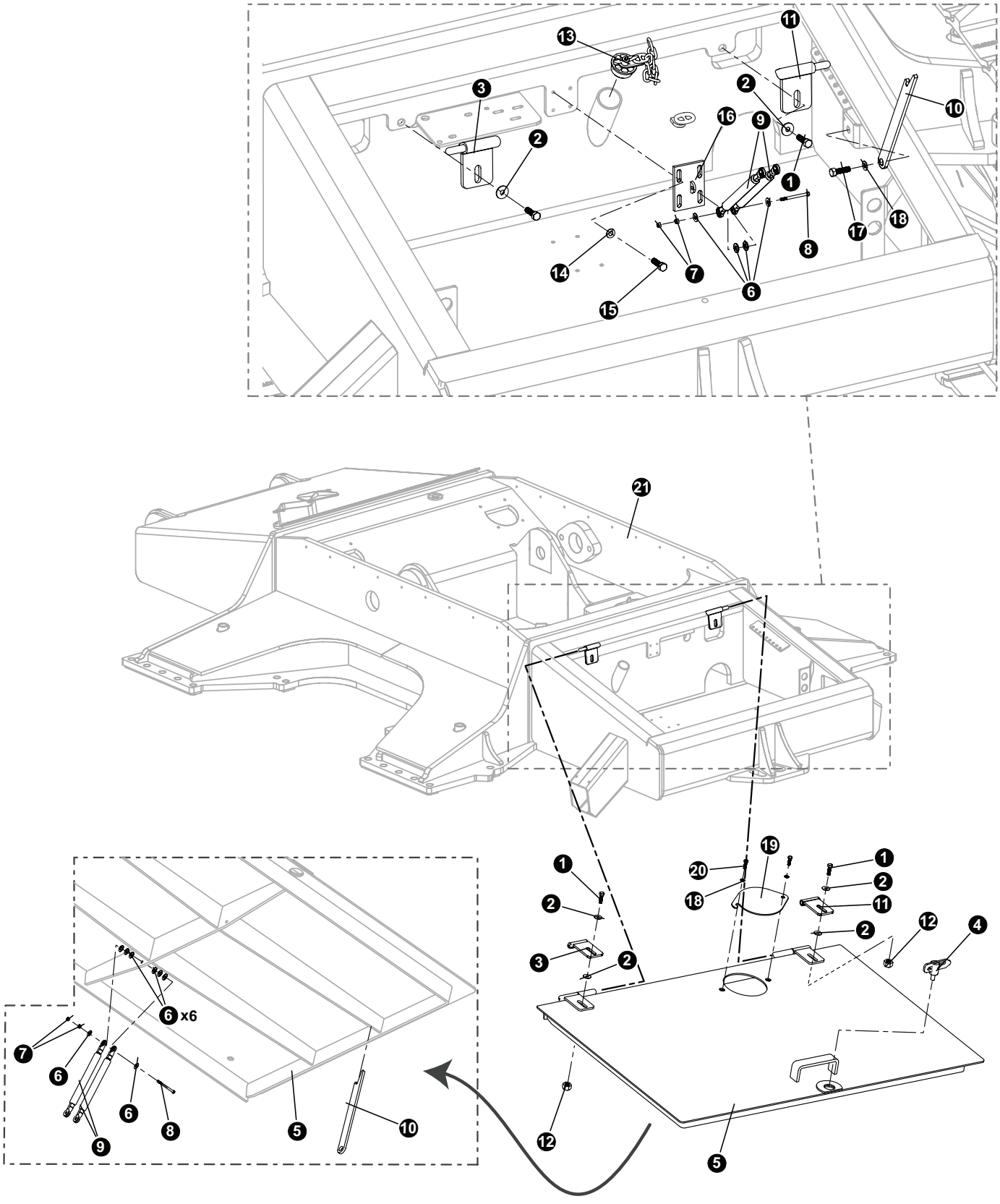
6 x6

LEVELING OPTION ASSEMBLY AND INSTALLATION

TL-775 REAR FRAME AND COMPONENT INSTALLATION

REF	PART #	QTY	DESCRIPTION	SEE SECTION
1	51000	4	BOLT - .5” X 1.25”	
2	10804	6	1/2” FLAT WASHER, EXTENDED DIA.	
3	53585	1	HINGE, ASSEMBLY-T/M TRUNK L.H.	
4	19771	1	LATCH, CAM - SHORT (PUMP GUARD)	
5	53228	1	LID, TRUNK LEVELING T/M **REPAIR ONLY**	
-	54057	1	LID, TRUNK LEVELING T/M BRACED	
6	10800	8	WASHER, FLAT - .25”	
7	16117	4	NUT, HEX - 6MM	
8	58198	2	BOLT - 6MM-1.0P x 60MM	
9	54104	2	SHOCK, GAS - TRUNK LID (takes four 54108 cylinder ends)	
10	54060	1	ROD, PROP - LEVELING TRUNK	
11	53584	1	HINGE, ASSEMBLY-T/M TRUNK R.H.	
12	10815	2	NUT, LOCK - .5”	
13	53728	1	CAP, EXPANDABLE - AUX OIL TANK (TRACK)	
14	10801	4	WASHER, FLAT - .3125”	
15	15605	4	BOLT - .3125” X .75”	
16	54059	1	BRACKET, TRUNK GAS SPRING	
17	10739	1	BOLT - .5” X 1.5”	
18	10804	3	WASHER, FLAT - .5”	
19	12150	1	COVER, ACCESS - RAD FILL / STEER CYL	
20	10783	2	BOLT - .5” X 1”	
21	(See Previous Page)	1	FRAME WELDMENT	LV-1

PAGE INTENTIONALLY LEFT BLANK

LEVELING OPTION ASSEMBLY AND INSTALLATION

TL-775 LEVELING CASTING AND YOKE - SERIAL # 0861 AND AND BELOW

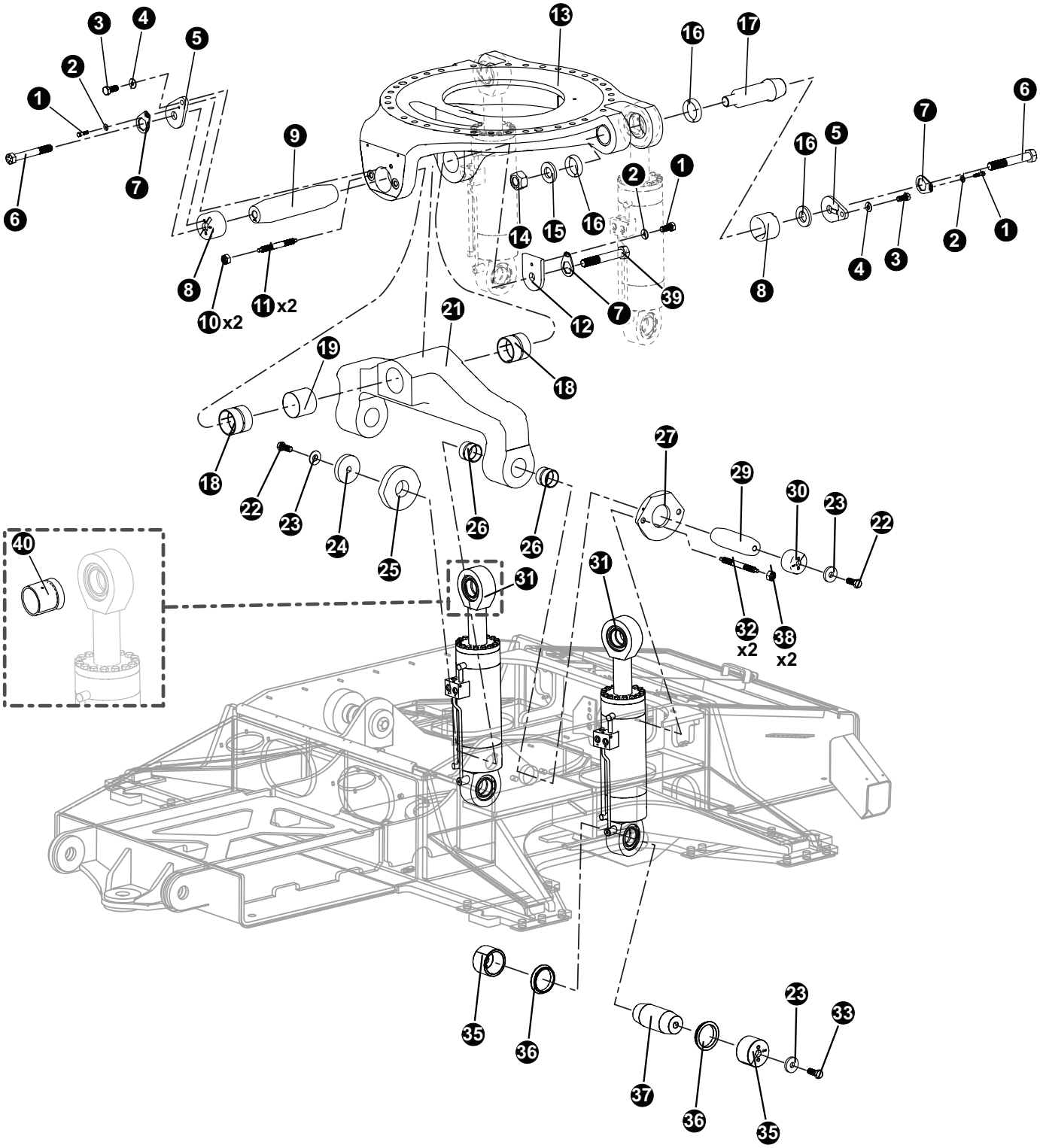

LEVELING OPTION ASSEMBLY AND INSTALLATION

TL-775 LEVELING CASTING AND YOKE - SERIAL # 0861 AND AND BELOW

REF	PART #	QTY	DESCRIPTION	SEE SECTION
1	10783	3	BOLT, 1/2-13X1”	
2	15534	3	WASHER, 1/2”	
3	15549	2	BOLT, 3/4-10X2”	
4	15550	2	WASHER, .75	
5	43742	2	EAR, PIN LOCK BASE	
6	57976	1	BOLT - 1.5” - 12 UNF X 3.0” LEVELING	
7	43740	3	PIN LOCK, 2.25 HEX	
8	52559	2	HUB, TAPER - 4.50”X 10 DEG	
9	53853	1	PIN - 4.5” X 19.62” DBL TAPERED THD. +3”	
10	15671	2	NUT, JAM - 1”	
11	53714	2	SCREW, SET - 1” X 4.38” CHAMFERED END	
12	43741	1	EAR, .75 THICK	
13	46683	1	CASTING, MACHINED LOWER TURNTABLE	
14	10728	1	NUT, NYLOCK - 2” (ZINC PLATED)	
15	12021	2	WASHER, BURNED	
16	46682	2	SPACER, 3.25” X 1.00” - LEVEL CYL.	
17	46681	1	PIN, PIVOT 3.75” X 1.00” - LEVEL CYL.	
18	52523	2	BUSHING - 5.0” X 4.5” X 4.25”	
19	54532	1	SPACER, BUSHING - LEVELING YOKE T/M	
21	48170	1	CASTING, MACHINED LEVEL YOKE - TL765	
22	10733	2	BOLT - 1” X 3”	
23	52638	2	WASHER, BURNED - 1 1/16” X 3” X 1/2”	
24	53764	1	WASHER, BURNED - 1.0” X 5.5” X 1”	
25	43118	1	PLATE, DISK 1.75” THICK	
26	48167	2	BUSHING - 3.75” X 3.25” X 3.0”	
27	48159	2	PLATE, SLACK ADJUSTER	
29	48194	2	PIN, 3.50” X 11.44” DOUBLE TAPER 10 DEG.	
30	48157	2	HUB, TAPER 3.5” - 10 DEG	
31	58191	2	CYLINDER, LEVELING - TL765 (7 IN HD)	
32	48423	4	SCREW, SLACK ADJUSTING	
33	15552	4	BOLT - 1” X 2.5”	
35	48157	2	HUB, TAPER 3.5” - 10 DEG.	
36	48160	2	SPACER, 3.50” X .875” - LEVEL CYL.	
37	48156	2	PIN, 3.50” X 8.38” DOUBLE TAPER 10DEG.	
38	57545	4	NUT, JAM - 1.25”- 7	
39	57975	2	BOLT - 1.5” - 12 UNF X 2.5” LEVELING	
40	(See Description)	2	BUSHING (SUPPLIER PART NUMBER: 720091A)	

LEVELING OPTION ASSEMBLY AND INSTALLATION

TL-775 LEVELING CASTING AND YOKE - SERIAL # 0862 AND UP

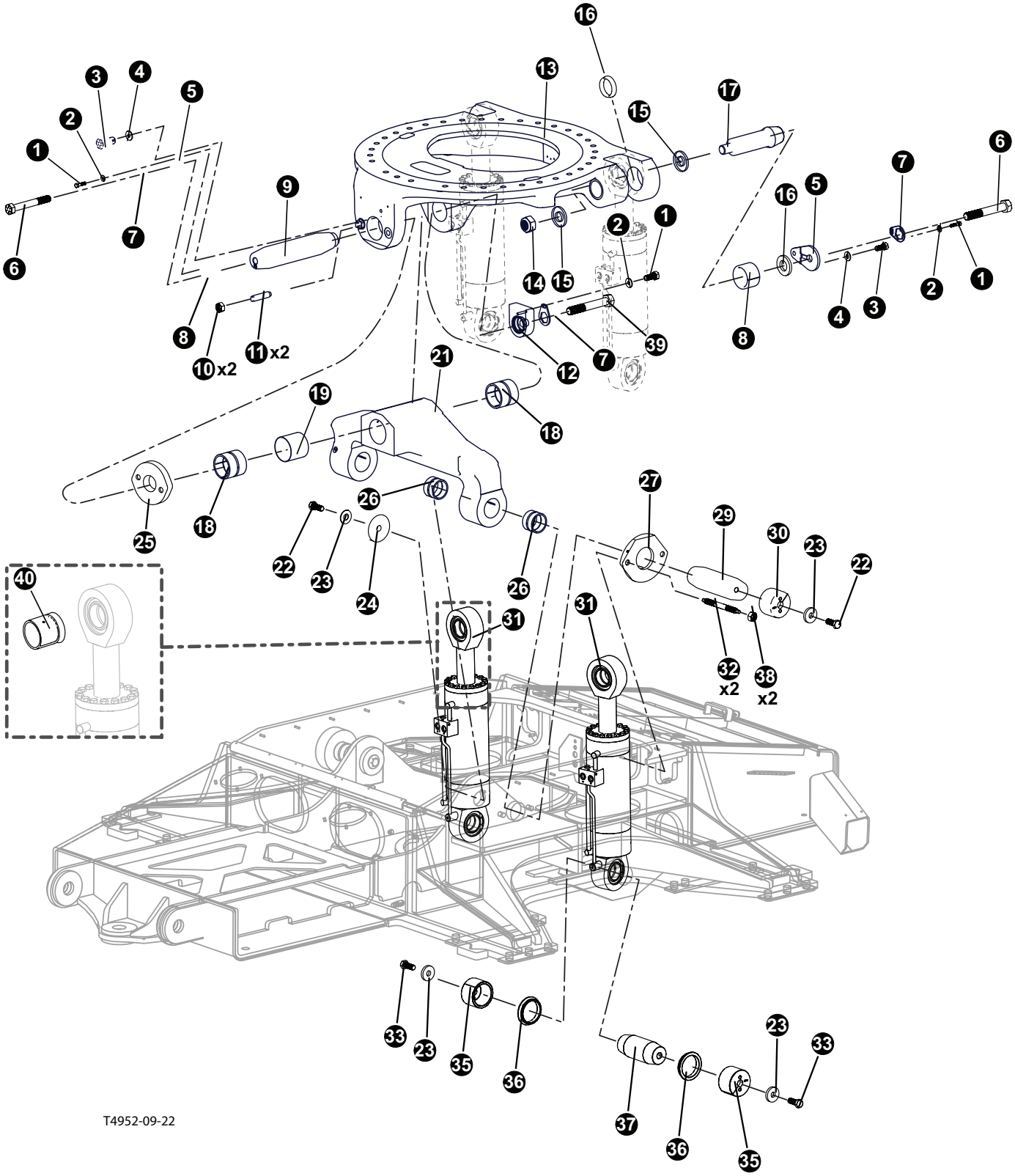

LEVELING OPTION ASSEMBLY AND INSTALLATION

TL-775 LEVELING CASTING AND YOKE - SERIAL # 0862 AND UP

REF	PART #	QTY	DESCRIPTION	SEE SECTION
1	10783	3	BOLT, 1/2-13X1”	
2	15534	3	WASHER, 1/2”	
3	15549	2	BOLT, 3/4-10X2”	
4	15550	2	WASHER, .75	
5	62078	2	EAR, PIN LOCK BASE HD	
6	57976	3	BOLT - 1.5” - 12 UNF X 3.0” LEVELING	
7	43740	4	PIN LOCK, 2.25 HEX	
8	62075	2	HUB, TAPER - 4.75”X 10 DEG - NEW CAST	
9	62079	1	PIN, BULL NOSE - 4.75” X 19.62” DBL TAPERED	
10	57545	2	NUT, JAM - 1.25” - 7	
11	48423	2	SCREW, SLACK ADJUSTING	
12	62126	1	EAR, PIN LOCK BASE - TAIL	
13	62041	1	CASTING, MACHINED LOWER TURNTABLE - 775	
14	10728	2	NUT, NYLOCK - 2” (ZINC PLATED)	
15	12021	2	WASHER, BURNED	
16	62076	2	SPACER, LEVEL CYL 3.75” X .97”	
17	62074	2	PIN, PIVOT 3.75” X 10” - LEVEL CYL.	
18	62069	2	BUSHING - 5.5 OD” X 4.75” LG	
19	62073	1	SPACER, BUSHING - LEVELING YOKE T/M	
21	62040	1	CASTING, LEVELING YOKE MACHINED - 775	
22	10733	2	BOLT - 1” X 3”	
23	52638	6	WASHER, BURNED - 1 1/16” X 3” X 1/2”	
24	53764	1	WASHER, BURNED - 1.0” X 5.5” X 1”	
25	62080	1	PLATE, SLACK ADJUSTMENT FRONT - HD CAST	
26	62068	2	BUSHING - 4.38” OD X 3.75” ID X 3.0” LG	
27	48159	1	PLATE, SLACK ADJUSTER	
29	62083	2	PIN,TAPERED 3.75” X 11.44”	
30	62082	2	HUB, TAPER - 3.75” - 10 DEG	
31	62060	2	CYLINDER, LEVELING - TL775-NEW CASTING	
32	48423	4	SCREW, SLACK ADJUSTING	
33	15552	4	BOLT - 1” X 2.5”	
35	62082	4	HUB, TAPER - 3.75” - 10 DEG	
36	62076	4	SPACER, LEVEL CYL - 3.75” X .97”	
37	62081	2	PPIN, BASE LEVEL CYL 62060 NEW	
38	57545	4	NUT, JAM - 1.25”- 7	
39	57975	1	BOLT - 1.5” - 12 UNF X 2.5” LEVELING	
40	(See Description)	2	BUSHING (SUPPLIER PART NUMBER: 720091A)	

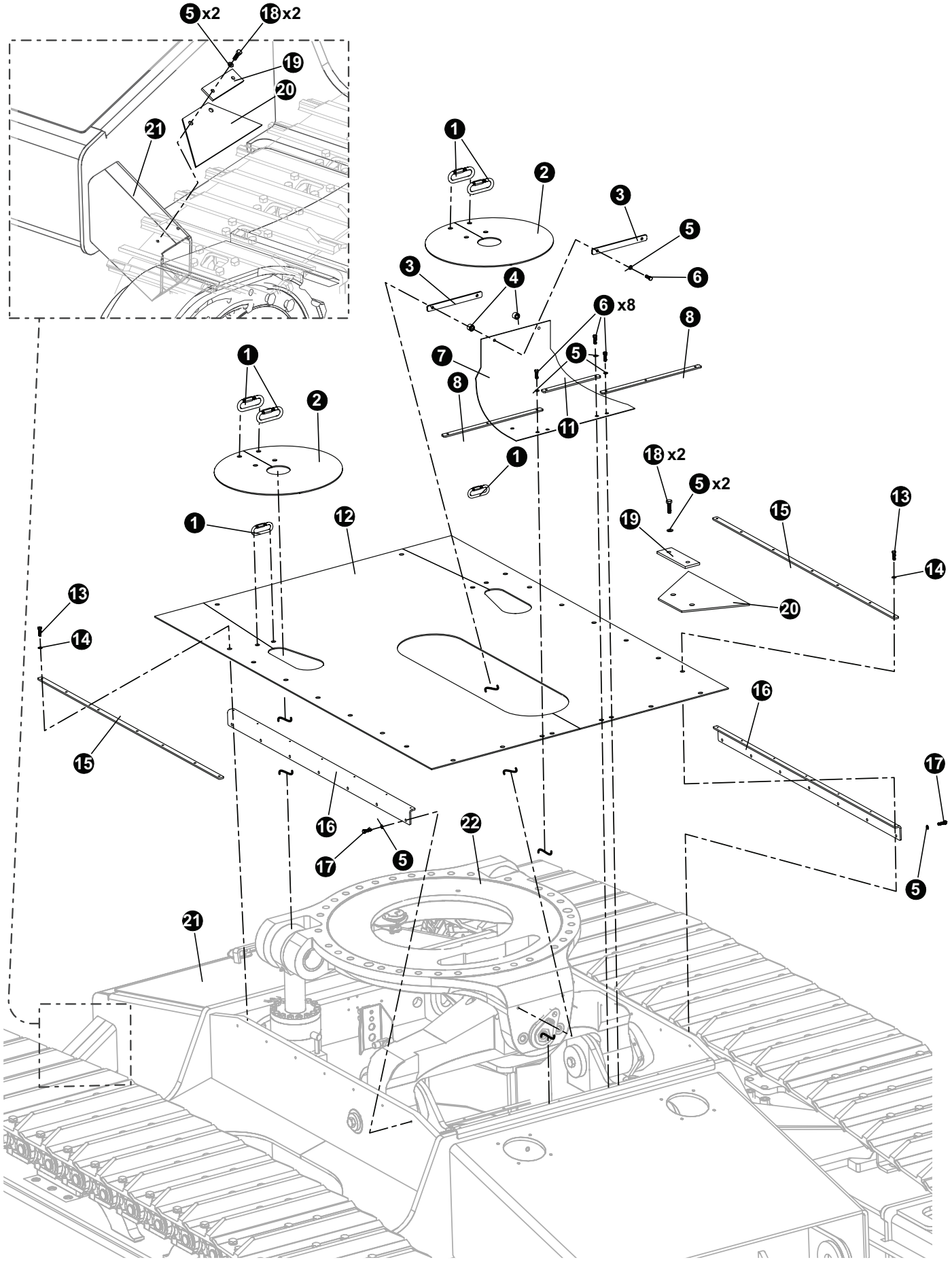
5 x2
18 x2
19
20
21
1
2
3
4
5
6
6 x8
7
8
11
12
13
14
15
16
17
22

LEVELING OPTION ASSEMBLY AND INSTALLATION

TL-775 DEBRIS SHIELD, SKIRTING, AND BELTING OPTION

REF	PART #	QTY	DESCRIPTION	SEE SECTION
1	18578-LV	6	LINK, QUICK - BEARING AREA DEFLECTOR	
2	53663-LV	2	SKIRTING, LEVELING CYLINDER	
3	53658-LV	1	BAR, RETAINER SKIRTING FRONT CASTING	
4	19219-LV	2	SPACER, RADIATOR MOUNT - BRAATZ	
5	15528-LV	20	3/8” FLAT WASHER	
6	15529	2	BOLT - .375” X 2”	
7	48436-LV	1	SKIRTING, FRONT CASTING-TL765	
8	53234-LV	2	BAR, RETAINER SKIRTING FRONT ENDS	
11	53259-LV	1	BAR, RETAINER SKIRTING FRONT CENTER	
12	48395-LV	1	SKRITING, LEVELING CARBODY - 755/765/775	
13	15576-LV	22	BOLT - .25” X 1”	
14	10757-LV	22	1/4” FLAT WASHER	
15	48379-LV	2	BAR, RETAINING SKIRTING SIDE - 765	
16	48378-LV	2	ATTACHMENT, SKIRTING SIDE - 765	
17	15542-LV	14	BOLT - .375” X .75”	
18	11707-LV	4	BOLT - .375” X 1”	
19	20209-LV	2	RETAINER, RUBBER STEP	
20	53622-LV	2	BELTING, TRACK CHUTE COVER	
21	(CLICK HERE)	1	CARBODY, FRAME - LEVELING	LV-1
22	(SEE PREVIOUS PAGE)	1	CASTING, MACHINED LOWER TURNTABLE	

PAGE INTENTIONALLY LEFT BLANK

LEVELING OPTION ASSEMBLY AND INSTALLATION

TL-775 REAR MOTOR LEVELING HYDRAULICS

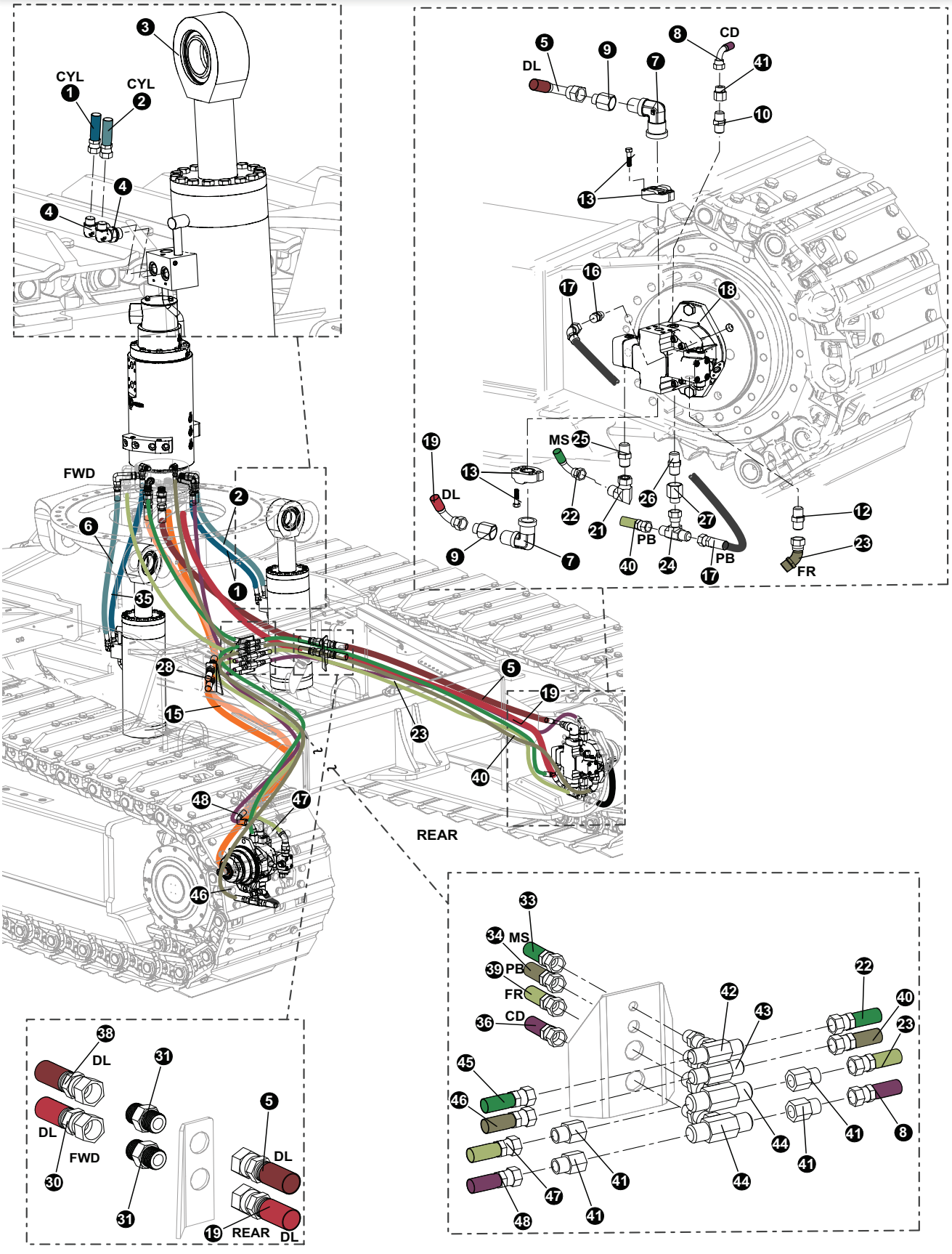

LEVELING OPTION ASSEMBLY AND INSTALLATION

TL-775 REAR MOTOR LEVELING HYDRAULICS

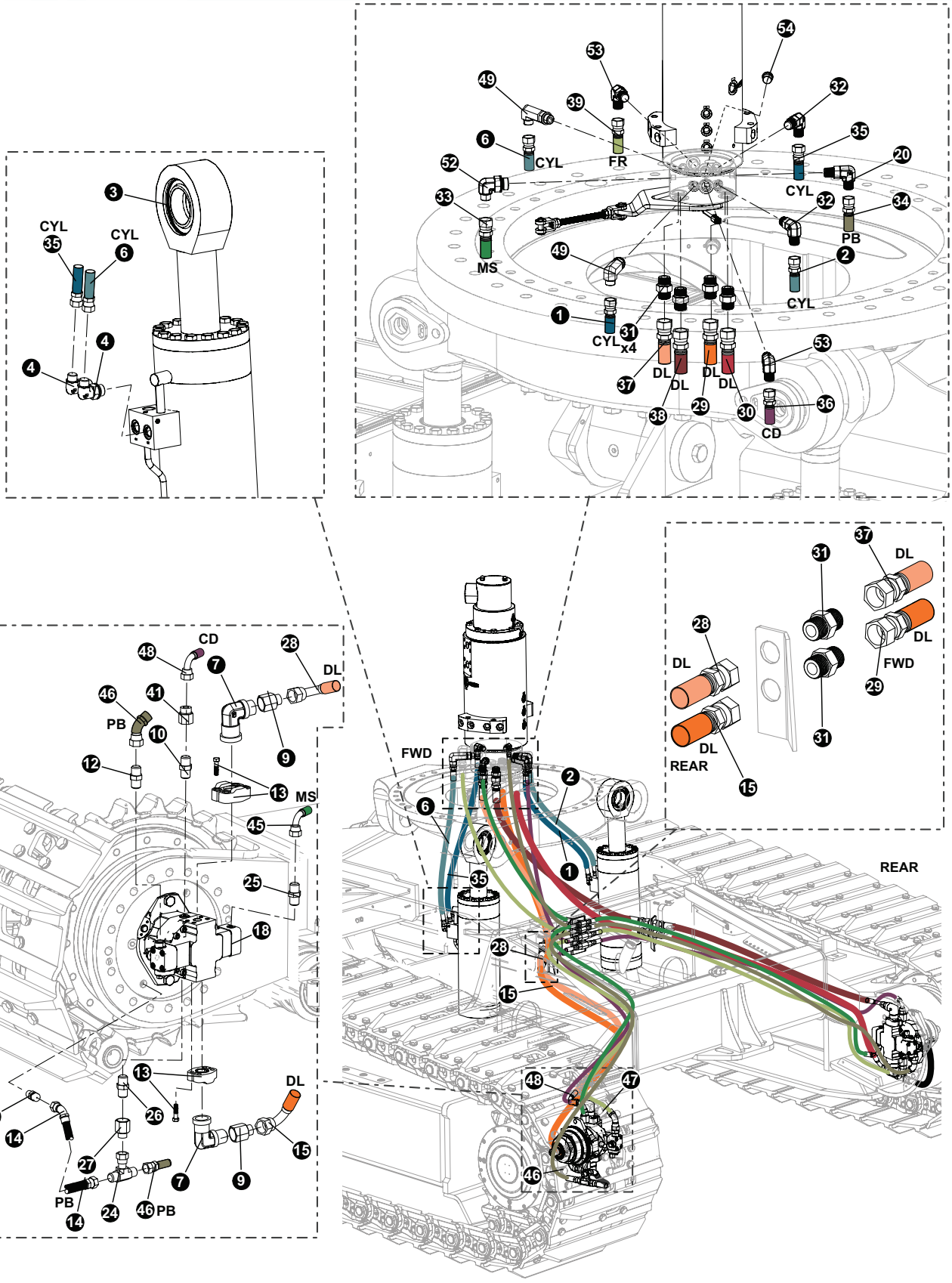

LEVELING OPTION ASSEMBLY AND INSTALLATION

TL-775 REAR MOTOR LEVELING HYDRAULICS

HOSE LENGTHS PER KIT #:
(IMPORTANT: REFERENCE CARBODY SIZE BELOW TO FIND APPROPRIATE HOSE LENGTH)

KIT#58122
755 (10'-4", 11'-0", & 3 METERS), 765 (10'-4", 11'-0", & 3 METERS), 775 (10'-4", 11'-0", & 3 METERS)

REF	PART #	QTY	DESCRIPTION	SEE SECTION
1	(SEE DESCRIPTION)	1	LEVELING HOSE ASSEMBLY - P# 787TC43 08-08OS-08OS-W (RM #5 TO RIGHT LEVEL CYLINDER BASE)	
2	(SEE DESCRIPTION)	1	LEVELING HOSE ASSEMBLY - P# 787TC42 08-08OS-08OS-W (RM #6 TO RIGHT LEVEL CYLINDER ROD)	
6	(SEE DESCRIPTION)	1	LEVELING HOSE ASSEMBLY - P# 787TC42 08-08OS-08OS-W (RM #2 TO LEFT LEVEL CYLINDER ROD)	
35	(SEE DESCRIPTION)	1	LEVELING HOSE ASSEMBLY - P# 787TC43 08-08OS-08OS-W (RM #4 TO RIGHT LEVEL CYLINDER BASE)	
8(	SEE DESCRIPTION)	1	CASE DRAIN HOSE ASSEMBLY - P#: 2092 08-08OS-09O9-W (RIGHT MOTOR TO BULKHEAD TEE)	
36	(SEE DESCRIPTION)	1	CASE DRAIN HOSE ASSEMBLY - P#: 2061 12-12OS-12OS-W (RM V2 TO BH CASE)	
48	(SEE DESCRIPTION)	1	CASE DRAIN HOSE ASSEMBLY - P#: 2092 08-08OS-09O9-W (LEFT MOTOR TO LEFT BULKHEAD TEE)	
5	(SEE DESCRIPTION)	1	DRIVE LINE HOSE ASSEMBLY - P#: 797TC63-16-16OS-16O9-SW (TOP DRIVE MOTOR TO BULKHEAD)	
15	(SEE DESCRIPTION)	1	DRIVE LINE HOSE ASSEMBLY - P#: 797TC72-16-16OS-16O9-SW (BOTTOM DRIVE MOTOR TO BH)	
19	(SEE DESCRIPTION)	1	DRIVE LINE HOSE ASSEMBLY - P#: 797TC72-16-16OS-16O9-SW (BOTTOM DRIVE MOTOR TO BH)	
28	(SEE DESCRIPTION)	1	DRIVE LINE HOSE ASSEMBLY - P#: 797TC63-16-16OS-16O9-SW (TOP DRIVE MOTOR TO BULKHEAD)	
29	(SEE DESCRIPTION)	1	DRIVE LINE HOSE ASSEMBLY - P#: 797TC70-16-16OS-16O9-SW (RM10 TO BOTTOM LEFT BH)	
30	(SEE DESCRIPTION)	1	DRIVE LINE HOSE ASSEMBLY - P#: 797TC70-16-16OS-16O9-SW (RM9 TO BOTTOM RIGHT BH)	
37	(SEE DESCRIPTION)	1	DRIVE LINE HOSE ASSEMBLY - P#: 797TC72-16-16OS-16O9-SW (RM1 TO TOP LEFT BH)	
38	(SEE DESCRIPTION)	1	DRIVE LINE HOSE ASSEMBLY - P#: 797TC70-16-16OS-16O9-SW (RM1 TO TOP RIGHT BH)	
23	(SEE DESCRIPTION)	1	FLUSH RETURN HOSE ASSEMBLY - P#: 2109 08-08OS-08O4-W (RIGHT MOTOR FLUSH TO TEE)	
39	(SEE DESCRIPTION)	1	FLUSH RETURN HOSE ASSEMBLY - P#: 2061 12-12OS-12OS-W (RM7 TO BH FLUSH)	
47	(SEE DESCRIPTION)	1	FLUSH RETURN HOSE ASSEMBLY - P#: 2109 08-08OS-08O4-W (LEFT MOTOR FLUSH TO TEE)	
22	(SEE DESCRIPTION)	1	MOTOR SHIFT HOSE ASSEMBLY - P#: 2098 04-04OS-04O9-W (RIGHT MS-DRIVE-MOTOR TO BH TEE)	
33	(SEE DESCRIPTION)	1	MOTOR SHIFT HOSE ASSEMBLY - P#: 2051 04-04OS-04OS-W (RM3 TO BULKHEAD MS TEE))	
45	(SEE DESCRIPTION)	1	MOTOR SHIFT HOSE ASSEMBLY - P#: 2098 04-04OS-04O9-W (LEFT MS-DRIVE-MOTOR TO BH TEE)	
14	(SEE DESCRIPTION)	1	PARKING BRAKE HOSE ASSEMBLY - P# 2012 06-06OS-06O4 (LEFT BRAKE TO TEE)	
17	(SEE DESCRIPTION)	1	PARKING BRAKE HOSE ASSEMBLY - P# 2020 06-06OS-06O4 (RIGHT BRAKE TO TEE)	
34	(SEE DESCRIPTION)	1	PARKING BRAKE HOSE ASSEMBLY - P#: 2061 06-06OS-06OS-W (RM1 TO BH BRAKE)	
40	(SEE DESCRIPTION)	1	PARKING BRAKE HOSE ASSEMBLY - P#: 2105 06-06OS-06OS-W (RIGHT BRAKE TO TEE)	
46	(SEE DESCRIPTION)	1	PARKING BRAKE HOSE ASSEMBLY - P#: 2105 06-06OS-06OS-W (LEFT BRAKE TO TEE)	

LEVELING OPTION ASSEMBLY AND INSTALLATION
TL-775 REAR MOTOR LEVELING HYDRAULICS

TL-775 NON-HOSE RELATED PARTS:

REF	PART #	QTY	DESCRIPTION	SEE SECTION
10	52439	2	CASE DRAIN, CONNECTOR, MALE ISO 6149	
41	18581	4	CASE DRAIN, CONNECTOR, REDUCER - ORS FF2281T-0812S	
44	53192	1	CASE DRAIN, FITTING, BULKHEAD BRANCH TEE- 12 WJLO-WL	
53	17688	1	CASE DRAIN, ELBOW, 90 - FF1868T-1212S	
3	(CLICK HERE)	2	CYLINDER, LEVELING - TL755/745/735/725	LV-3
4	15154	4	CYLINDER, ELBOW, 90 - FF1868T-0810S	
32	16360	2	CYLINDER, ELBOW, 90 - FF1868T-0808S	
49	57445	2	CYLINDER, FITTING, 8 CC5OLO-S	
7	15103	4	DRIVE LINE, ADAPTER, 90 FLANGE - FF5540-1616S	
9	20455	4	DRIVE LINE, CONNECTOR, REDUCER - ORS FF2281T-1620S	
13	15113	4	DRIVE LINE, KIT, SPLIT FLANGE - 1" (CODE 62)	
	62748	16	BOLT - M14-2.0X45 MM	
	18418	16	WASHER, FLAT - 14MM	
	15378	4	O-RING - 1.25" SF (CODE 61/62)	
31	15225	8	DRIVE LINE, CONNECTOR, STR - FF1852T-1616S	
12	57504	2	FLUSH RETURN, FITTING, METRIC 8M22F87OMLOS	
41	18581	2	FLUSH RETURN, CONNECTOR, REDUCER - ORS FF2281T-0812S	
44	53192	1	FLUSH RETURN, FITTING, BULKHEAD BRANCH TEE- 12 WJLO-WL	
53	17688	1	FLUSH RETURN, ELBOW, 90 - FF1868T-1212S	
21	15145	1	MOTOR SHIFT, ELBOW, 90 SWIVEL - FF2098T-0404S	
25	53157	2	MOTOR SHIFT, FITTING, CONNECTOR - #4 ORF - 14MM	
42	52901	1	MOTOR SHIFT, TEE, BULKHEAD BRANCH - 4	
52	15133	1	MOTOR SHIFT, ELBOW, 90 - FF1868T-0406S	
16	53124	2	PARKING BRAKE, FITTING, MALE CONNECTOR ISO 6149	
20	16296	1	PARKING BRAKE, ELBOW, 90 - FF1868T-0606S	
24	52900	2	PARKING BRAKE, SWIVEL, NUT BRANCH TEE #6	
26	54795	2	PARKING BRAKE, CONNECTOR, STR ORIFICED .04" TRACK MOTOR	
27	57485	2	PARKING BRAKE FITTING, 8-6 TRLON	
43	52902	1	PARKING BRAKE, TEE, BULKHEAD BRANCH - 6	
18	(CLICK HERE)	1	TRACK DRIVE MOTOR	TS-1

LEVELING OPTION ASSEMBLY AND INSTALLATION

TL-775 REAR MOTOR LEVELING HYDRAULICS

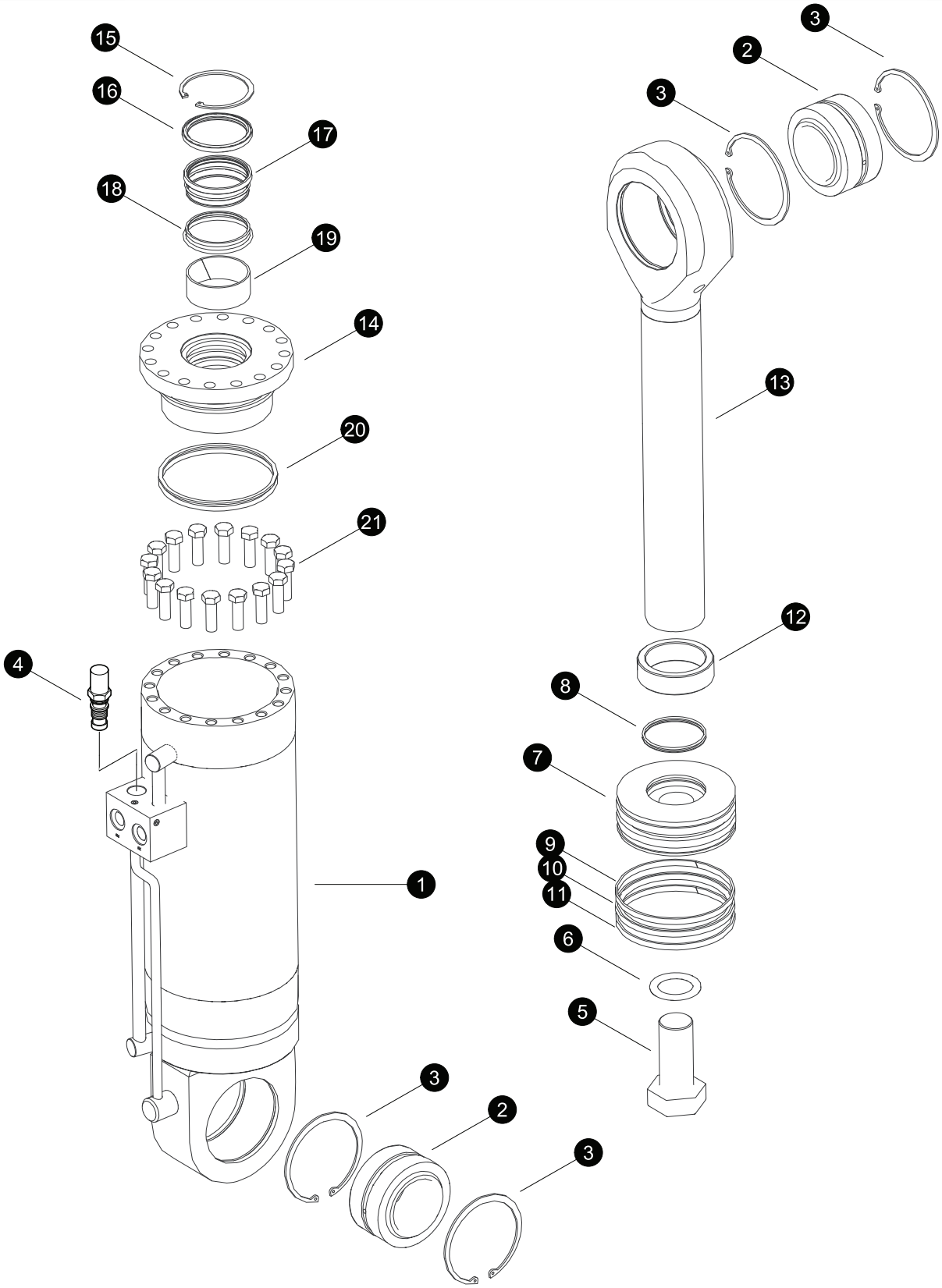

LEVELING OPTION ASSEMBLY AND INSTALLATION

TL-775 LEVELING CYLINDER BREAKDOWN

REF	PART #	QTY		DESCRIPTION	SEE SECTION
-	57646	2	R	CYLINDER, LEVELING - (7 INCH)	
-	57646	2		CYLINDER, LEVELING - TL755 (7 INCH)	
1	204100B	1	R	BARREL ASSEMBLY	
2	54105	2		BUSHING, SPHERICAL- 3.25”	
3	716030A	4		RING, SNAP - 3” SPHERICAL BUSHING	
4	57706	2		CARTRIDGE, LEVEL CYLINDER	
5	711181A	1		BOLT, CYLINDER ROD - 2” X 4-1/4” (2700 +/- 200 FT.LBS.) (3600 +/- 265 NM))	
6	718032A	1		WASHER, 2”	
7	401021B	1	R	PISTON ASSY	
8	NSS	1	T	O-RING	
8	NSS	1	T	RING, BACKUP	
9	NSS	1	T	RING, PISTON WEAR	
10	NSS	1	T	O-RING, PISTON	
10	NSS	1	T	SEAL, PISTON	
11	NSS	1	T	RING, PISTON WEAR	
12	320791B	1		STROKE LIMITER - 765 ONLY	
13	302765B	1		ROD ASSEMBLY (INCLUDES ITEMS 2 AND 3)	
14	501082B	1	R	BEARING, ASSEMBLY	
15	NSS	1	T	RING, SNAP WIPER, ROD	
16	NSS	1	T	SEAL, DUST	
17	NSS	1	T	RING, ROD BEARING BACK-UP	
18	NSS	1	T	U-CUP, ROD BEARING	
19	NSS	1	T	RING, ROD BEARING WEAR	
20	NSS	1	T	O-RING AND BACKUP RING	
21	711034A	16		BOLT - 5/8” X 2-1/4” (175FT.LBS (233 NM))	

R KIT OR ASSEMBLY - INCLUDES ALL ITEMS INDENTED UNDERNEATH.
T INCLUDED IN SEAL REPAIR KIT PART #57679

LEVELING OPTION ASSEMBLY AND INSTALLATION

TL-775 LEVELING SYTEM GREASE LINES

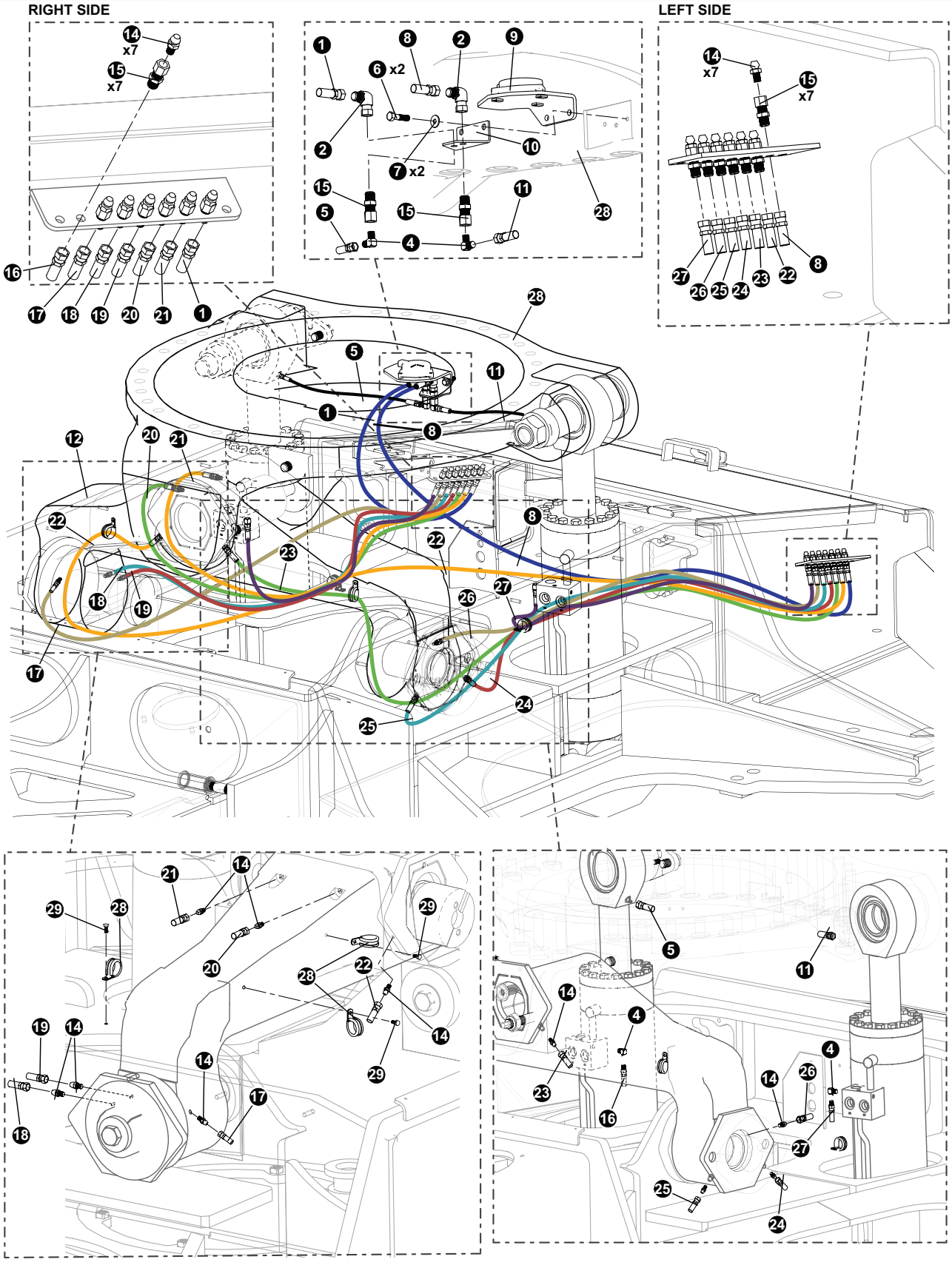

LEVELING OPTION ASSEMBLY AND INSTALLATION

TL-775 LEVELING SYTEM GREASE LINES

HOSE KIT: 53262 - KIT, HOSE - GREASE LINE LOWER CARBODY (Typical for 775)

RIGHT SIDE

REF	PART #	QTY	DESCRIPTION
5	(See Description)	1	GREASE LINE - HOSE PART #: 2022-02-02SP-02SP-W (Bulkhead Cylinder Eye)
16	(See Description)	1	GREASE LINE - HOSE PART #: 2112-02-04JS-04JS-W (Grease BH For Cylinder Eye)
17	(See Description)	1	GREASE LINE - HOSE PART #: 2136-02-02PS-04JS-W (Yoke for Big Pin Level Plate)
18	(See Description)	1	GREASE LINE - HOSE PART #: 2132-02-02PS-04JS-W (Yoke for Big Pin Level Plate)
19	(See Description)	1	GREASE LINE - HOSE PART #: 2099-02-02PS-02JS-W (Right Side Yoke Pin)
20	(See Description)	1	GREASE LINE - HOSE PART #: 2085-02-02PS-04JS-W (Right Side Yoke Pin)
21	(See Description)	1	GREASE LINE - HOSE PART #: 2084-02-02PS-04JS-W (Right Side Yoke Pin)

LEFT SIDE

REF	PART #	QTY	DESCRIPTION
11	(See Description)	1	GREASE LINE - HOSE PART #: 2022-02-02SP-02SP-W (Bulkhead Cylinder Eye)
27	(See Description)	1	GREASE LINE - HOSE PART #: 2112-02-04JS-04JS-W (Grease BH For Cylinder Eye)
26	(See Description)	1	GREASE LINE - HOSE PART #: 2134-02-02PS-04JS-W (Front Slack Adj. Level Plate)
25	(See Description)	1	GREASE LINE - HOSE PART #: 2131-02-02PS-04JS-W (Front Slack Adj. Level Plate)
24	(See Description)	1	GREASE LINE - HOSE PART #: 2092-02-02PS-04JS-W (Front Side Slack Adj.)
23	(See Description)	1	GREASE LINE - HOSE PART #: 2089-02-02PS-04JS-W (Side Yoke Pin)
22	(See Description)	1	GREASE LINE - HOSE PART #: 2085-02-02SP-04JS-W (Back Side Slack Adj.)

HOSE KIT: 58122 (PARTIAL) - KIT, HOSE - GREASE LINE LOWER CARBODY

REF	PART #	QTY	DESCRIPTION
1	(See Description)	1	GREASE LINE - HOSE PART #: HLB78-02-02PS-04JS-W
8	(See Description)	1	GREASE LINE - HOSE PART #: HLB80-02-02PS-04JS-W

STANDARD NON-KIT PARTS

REF	PART #	QTY	DESCRIPTION
2	17023	2	ELBOW, 90 SWIVEL - 6500-4
4	22281	2	ELBOW, 90 - 5546132
6	15576	2	BOLT - .25” X 1”
7	10800	2	1/4” FLAT WASHER
9	47310	1	BRACKET, SWITCH - AUTO LEVEL
10	47308	1	BRACKET, GREASE LISE - LEVELING
12	53860	1	LEVELER, INTERMEDIATE SECTION +3”
14	55721	16	FITTING, UNION - 4 HBI2-B
15	15658	16	CONNECTOR, STR BULKHEAD - 2239-2-4S
28	“46683-LV”	1	CASTING, MACHINED LOWER TURNTABLE

PAGE INTENTIONALLY LEFT BLANK

LEVELING OPTION ASSEMBLY AND INSTALLATION

TL-775 FUEL SYSTEM

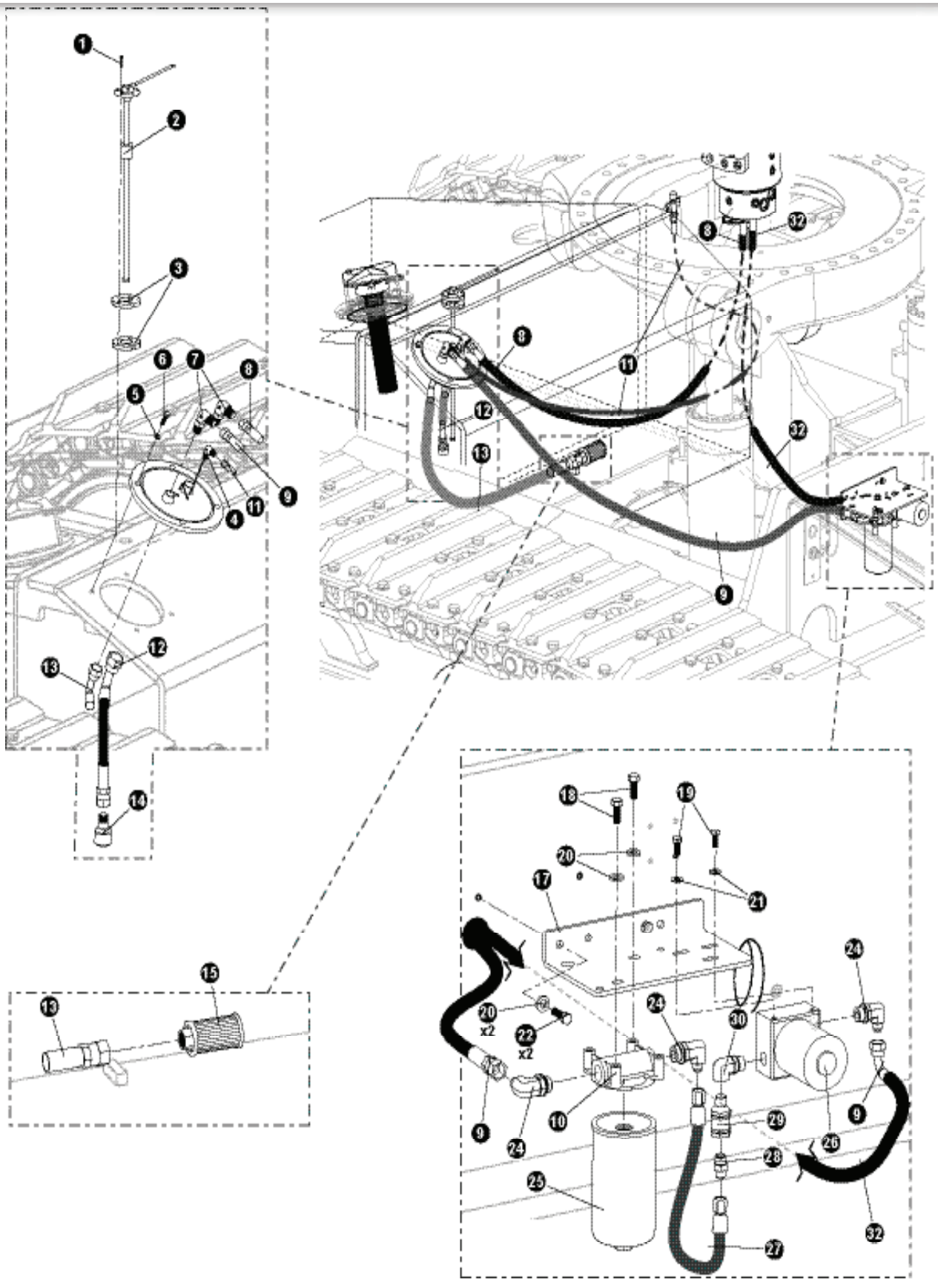

LEVELING OPTION ASSEMBLY AND INSTALLATION

TL-775 FUEL SYSTEM

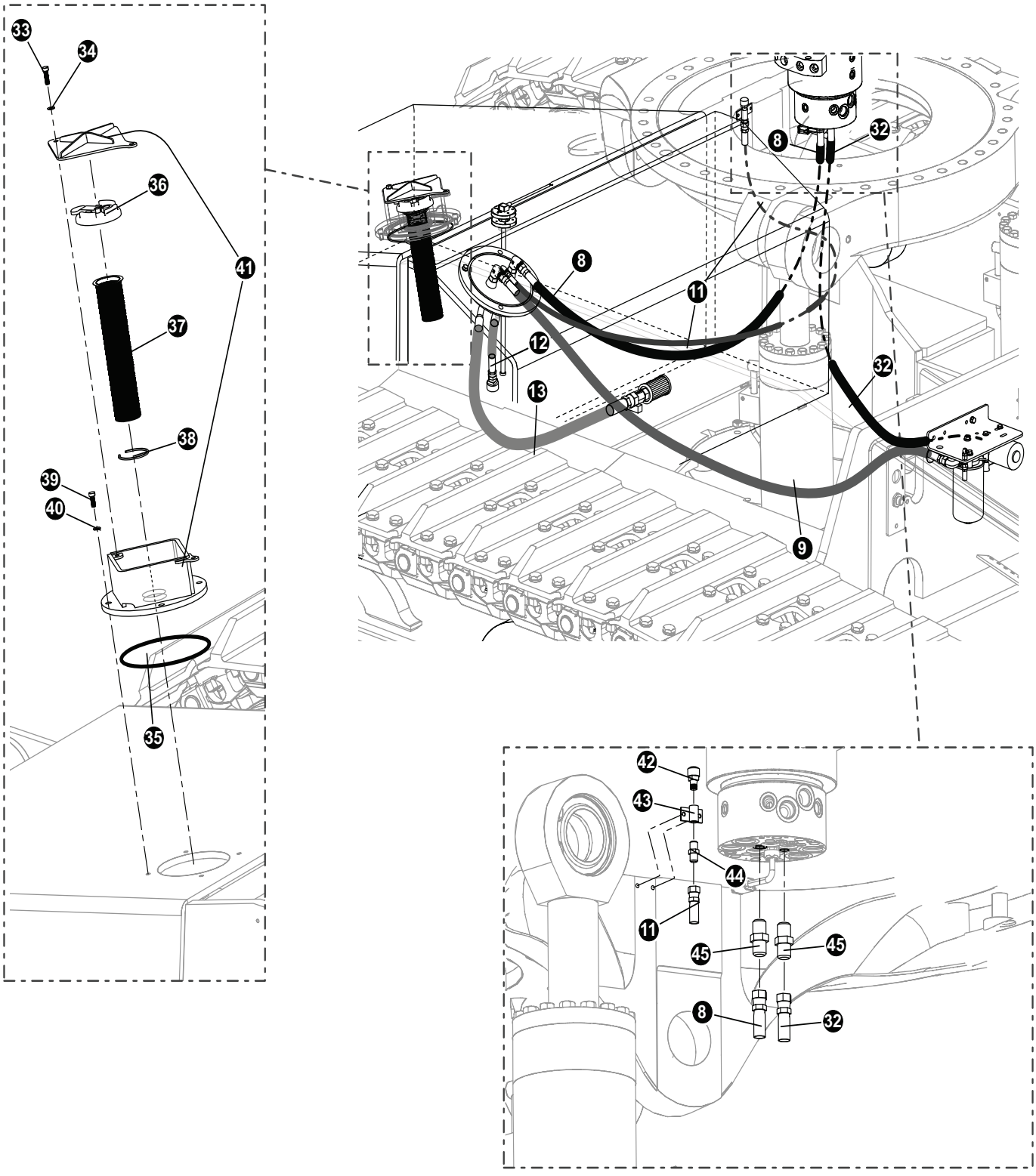

LEVELING OPTION ASSEMBLY AND INSTALLATION

TL-775 FUEL SYSTEM

REF	PART #	QTY	DESCRIPTION	SEE SECTION
1	22862-LV	5	10-24x1/2" BUTTON HEAD SCREW	
2	57220-LV	1	SENDER, FUEL LEVEL W/FLOAT	
3	46828-LV	2	MOUNT, FUEL SENDER	
4	15505-LV	1	ELBOW, 90 4-4 CLO-S	
7	22405-LV	2	ELBOW, 90 - 8-6 C5OLO-S	
8	(See Description)	1	HOSE ASSEMBLY - **PART #221FR78 06-06JS-06JS-W**	
9	(See Description)	1	HOSE ASSEMBLY - **PART #221FR77 06-06JS-06JS-W**	
10	43576	1	MOUNT, FILTER HEAD ASSEMBLY	
11	(See Description)	1	HOSE ASSEMBLY - **PART #387TC85 04-04OS-04OS-W**	
12	(See Description)	1	HOSE ASSEMBLY - **PART #187TC20 08-08OS-OPEN**	
13	(See Description)	1	HOSE ASSEMBLY - **PART #187TC42 08-08OS-08MP**	
14	54170-LV	1	VENT, FUEL TANK - TRACK	
15	17271-LV	1	FILTER, SCREEN - FUEL SYSTEM	
16	53885-LV	1	VALVE, CHECK - FUEL TANK	
17	53197-LV	1	MOUNT, FUEL COMPONENTS - LEV T/M	
18	11707-LV	2	BOLT - .375" X 1"	
19	15605-LV	2	BOLT - .3125" X .75"	
20	10802-LV	4	WASHER, FLAT - .375"	
21	10801	2	WASHER, FLAT - .3125"	
22	15542-LV	2	BOLT - .375" X .75"	
24	53073-LV	3	ELBOW, 90 6-JIC X 10-ORB)	
25	51751	1	FILTER, SPIN-ON FUEL - 7"	
26	57784-LV	1	PUMP, FUEL - AIR DOG	
27	(See Description)	1	HOSE ASSEMBLY - **PART #SHAW-10706870-1**	
28	16009-LV	1	FITTING, 6 FTX-S PIPE-JIC	
29	15652-LV	1	VALVE, CHECK - HYDRAULIC/FUEL	
30	57824-LV	1	FITTING, ELBOW FEMALE - RAPTOR FUEL PUMP	
32	(See Description)	1	HOSE ASSEMBLY - **PART #221FR88 06-06JS-06J9-W**	
33	10739-LV	2	BOLT - .5" X 1.5"	
34	10804-LV	2	WASHER, FLAT - .5"	
35	15600-LV	1	O-RING - 8" DIA. -369	
36	16585-LV	1	CAP, FUEL - LOCKING	
37	17114-LV	1	STRAINER, FUEL SYSTEM	
38	17115-LV	1	RING, SNAP - FUEL STRAINER RETAINER	
39	10783-LV	4	BOLT - 1/2" x 1"	
40	15534-LV	4	WASHER, SAE flat - 1/2"	
41	47605-LV	1	COVER, LOCKING FUEL TANK	
42	54170-LV	1	VENT, FUEL TANK - TRACK	
43	12222-LV	1	BRACKET, GAUGE MOUNT/GREASE LINE T/M	
44	15131-LV	1	CONNECTOR, STR - FF2031T-0404S	
45	18034-LV	2	CONNECTOR, STR - FF1852T-0606S	

📖 See referenced page for component or assembly breakdown.

PAGE INTENTIONALLY LEFT BLANK